## WCH 3597

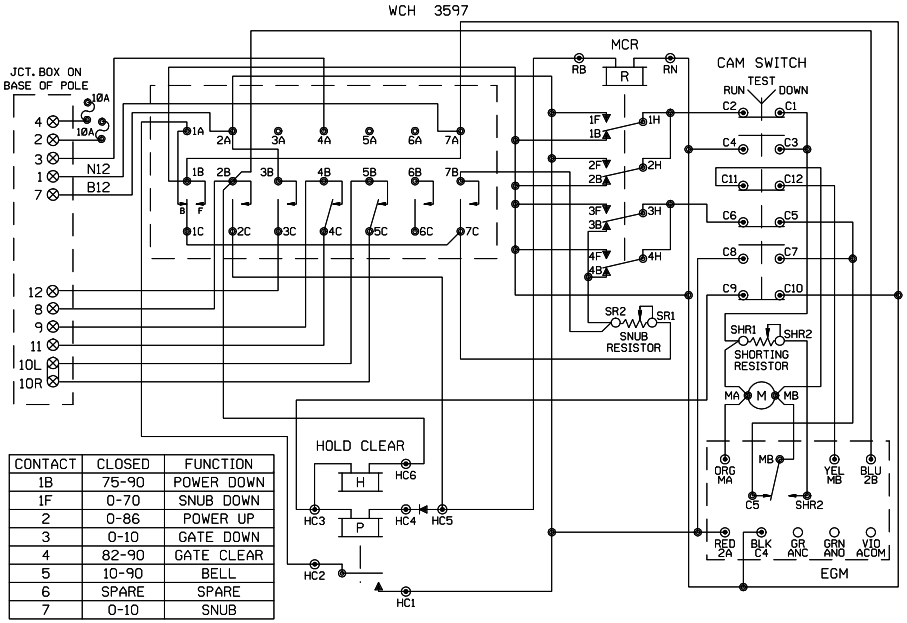


| CONTACT | CLOSED | FUNCTION |
|---|---|---|
| 1B | 75-90 | POWER DOWN |
| 1F | 0-70 | SNUB DOWN |
| 2 | 0-86 | POWER UP |
| 3 | 0-10 | GATE DOWN |
| 4 | 82-90 | GATE CLEAR |
| 5 | 10-90 | BELL |
| 6 | SPARE | SPARE |
| 7 | 0-10 | SNUB |

## WCH 3597-RB

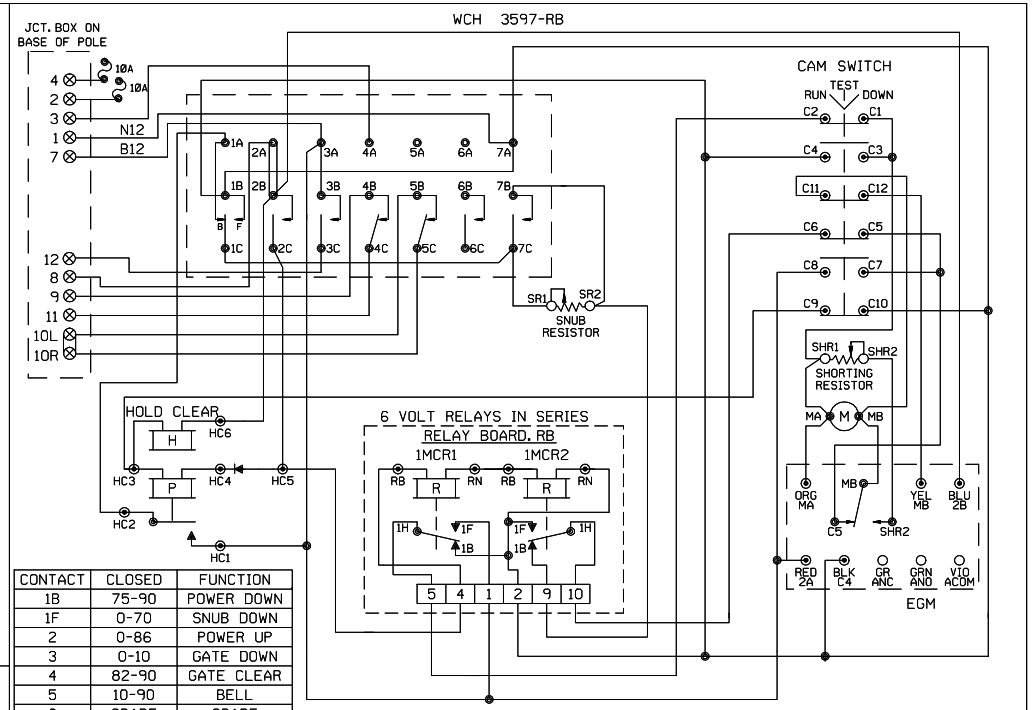


| CONTACT | CLOSED | FUNCTION |
|---|---|---|
| 1B | 75-90 | POWER DOWN |
| 1F | 0-70 | SNUB DOWN |
| 2 | 0-86 | POWER UP |
| 3 | 0-10 | GATE DOWN |
| 4 | 82-90 | GATE CLEAR |
| 5 | 10-90 | BELL |
| 6 | SPARE | SPARE |
| 7 | 0-10 | SNUB |

## WCH 3593-E

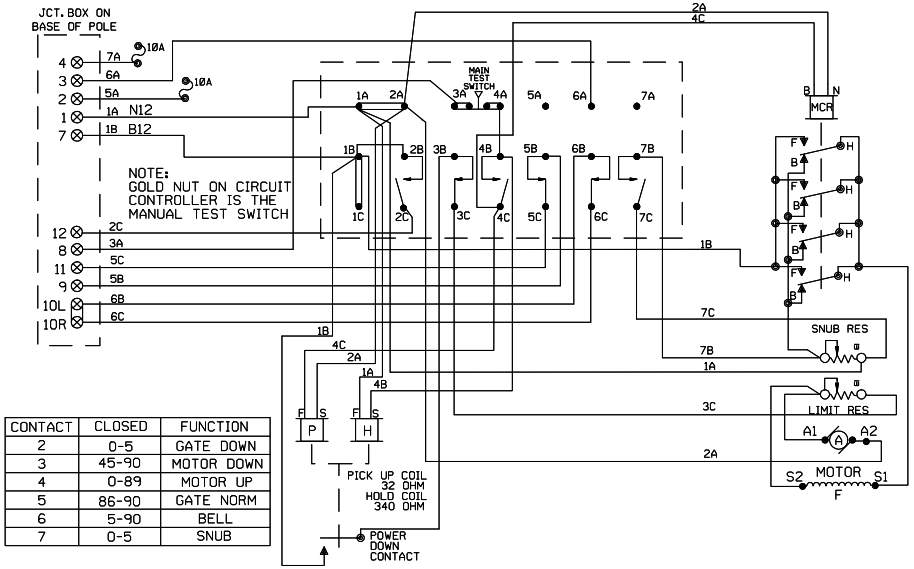


| CONTACT | CLOSED | FUNCTION |
|---|---|---|
| 2 | 0-5 | GATE DOWN |
| 3 | 45-90 | MOTOR DOWN |
| 4 | 0-89 | MOTOR UP |
| 5 | 86-90 | GATE NORM |
| 6 | 5-90 | BELL |
| 7 | 0-5 | SNUB |

## WCH 3597-E

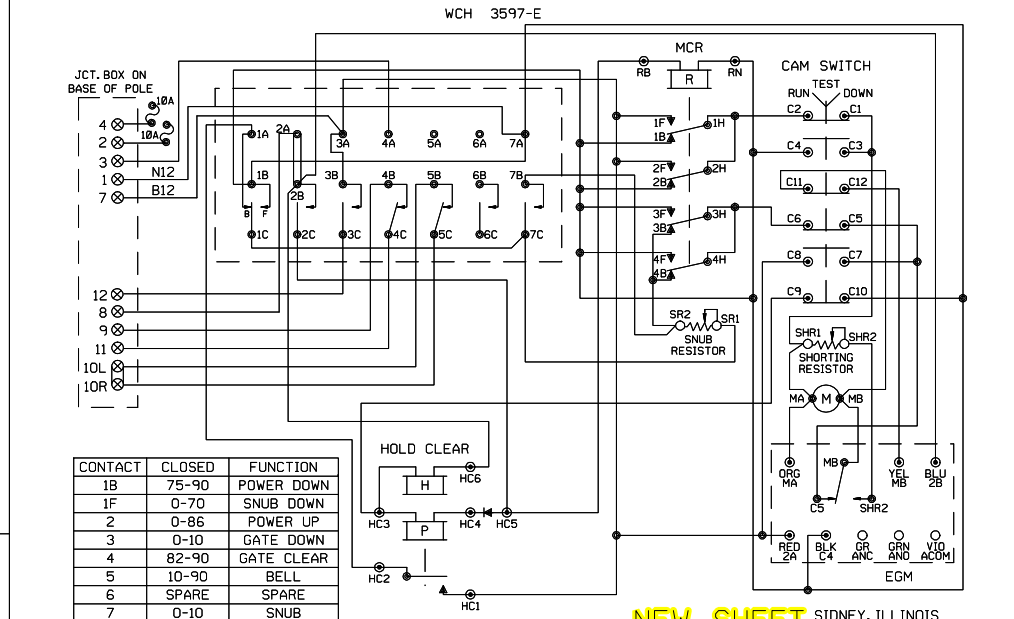


| CONTACT | CLOSED | FUNCTION |
|---|---|---|
| 1B | 75-90 | POWER DOWN |
| 1F | 0-70 | SNUB DOWN |
| 2 | 0-86 | POWER UP |
| 3 | 0-10 | GATE DOWN |
| 4 | 82-90 | GATE CLEAR |
| 5 | 10-90 | BELL |
| 6 | SPARE | SPARE |
| 7 | 0-10 | SNUB |

SHOW TYPE MECH. INSTALLED

ALL MECHANISMS SHOWN IN THE CLEAR POSITION

JCT. BOX ON BASE POLE

| L | R | L | R |
|---|---|---|---|
| 1 | | 7 | |
| 2 | | 8 | |
| 3 | | 9 | |
| 4 | | 10 | |
| 5 | | 11 | |
| 6 | | 12 | |

NEW SHEET SIDNEY, ILLINOIS
TR 269A
M.P. 136.70
VILLA GROVE SUBDIVISION
D.O.T.#166 899J

| | | | | | |
|---|---|---|---|---|---|
| 1 | 11-15-06 INSTALL FLS/GATES & CONSTANT WARNING AT TR 269A M.P. 136.70 A.F.E. 59235 JJL / /CTC/RDD | MODIFICATION LEVEL | | UNION PACIFIC QUALITY PRODUCTIVITY SAFETY SIGNAL DESIGN | DES: CTC |
| | | O. A. LAST LEVEL CHECKED | DP | | DIG: CTC |
| | | LAST LEVEL MOD THIS TYPICAL | DP | | CHK: JJL |
| | | LAST LEVEL BY DESIGNER | DP | | A.F.E. 59235 |
| | | CHANGED FROM TYPICAL? | N | | ID= 030113670.6X |
| | | NOV 02.26.07 4K GWIRING.DGN | | | |

**UNION PACIFIC RAILROAD**

81ST STREET, ILLINOIS TO
VILLA GROVE, ILLINOIS
C.T.C. CIRCUITS

Office of AVP Engineering - Design Omaha, Nebraska

DATE 11-15-06
SHEET 6
DWG 136.70
S-301

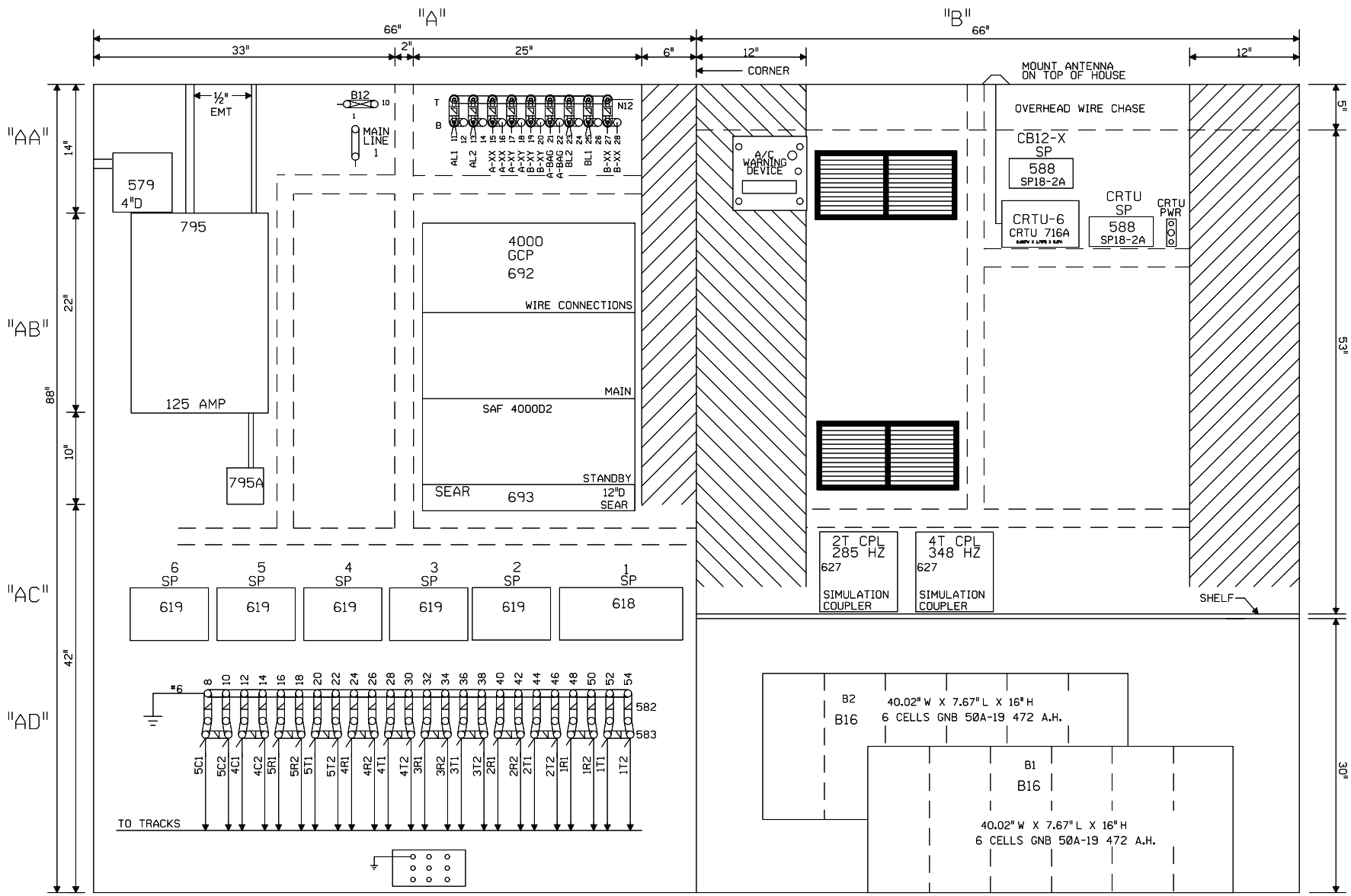


NOTE: ALL DIMENSIONS SHOWN ARE APPROXIMATE.

0 1 2 3 4 FEET

SCALE: 1.5 INCHES = 1 FOOT

NEW SHEET
SIDNEY, ILLINOIS
TR 269A
M.P. 136.70
VILLA GROVE SUBDIVISION
D.O.T.#166 899J

| | |
|---|---|
| 1 | 11-15-06 |
| INSTALL FLS/GATES & CONSTANT WARNING AT TR 269A M.P. 136.70 A.F.E. 59235 | JJL / /CTC/RDD |

| MODIFICATION LEVEL | |
|---|---|
| O. A. LAST LEVEL CHECKED | DP |
| LAST LEVEL MOD THIS TYPICAL | DP |
| LAST LEVEL BY DESIGNER | DP |
| CHANGED FROM TYPICAL? | Y |

rev 02.26.07 4K 4TKGFC.8

UNION PACIFIC
QUALITY PRODUCTIVITY SAFETY
SIGNAL DESIGN

| | |
|---|---|
| DES: | CTC |
| DIG: | CTC |
| CHK: | JJL |
| A.F.E. | 59235 |
| ID= 030113670.7X | |

**UNION PACIFIC RAILROAD**

81ST STREET, ILLINOIS TO
VILLA GROVE, ILLINOIS
C.T.C. CIRCUITS

Office of AVP Engineering - Design Omaha, Nebraska

| | |
|---|---|
| DATE | 11-15-06 |
| SHEET | 7 |
| DWG | 136.70 |
| | S-301 |

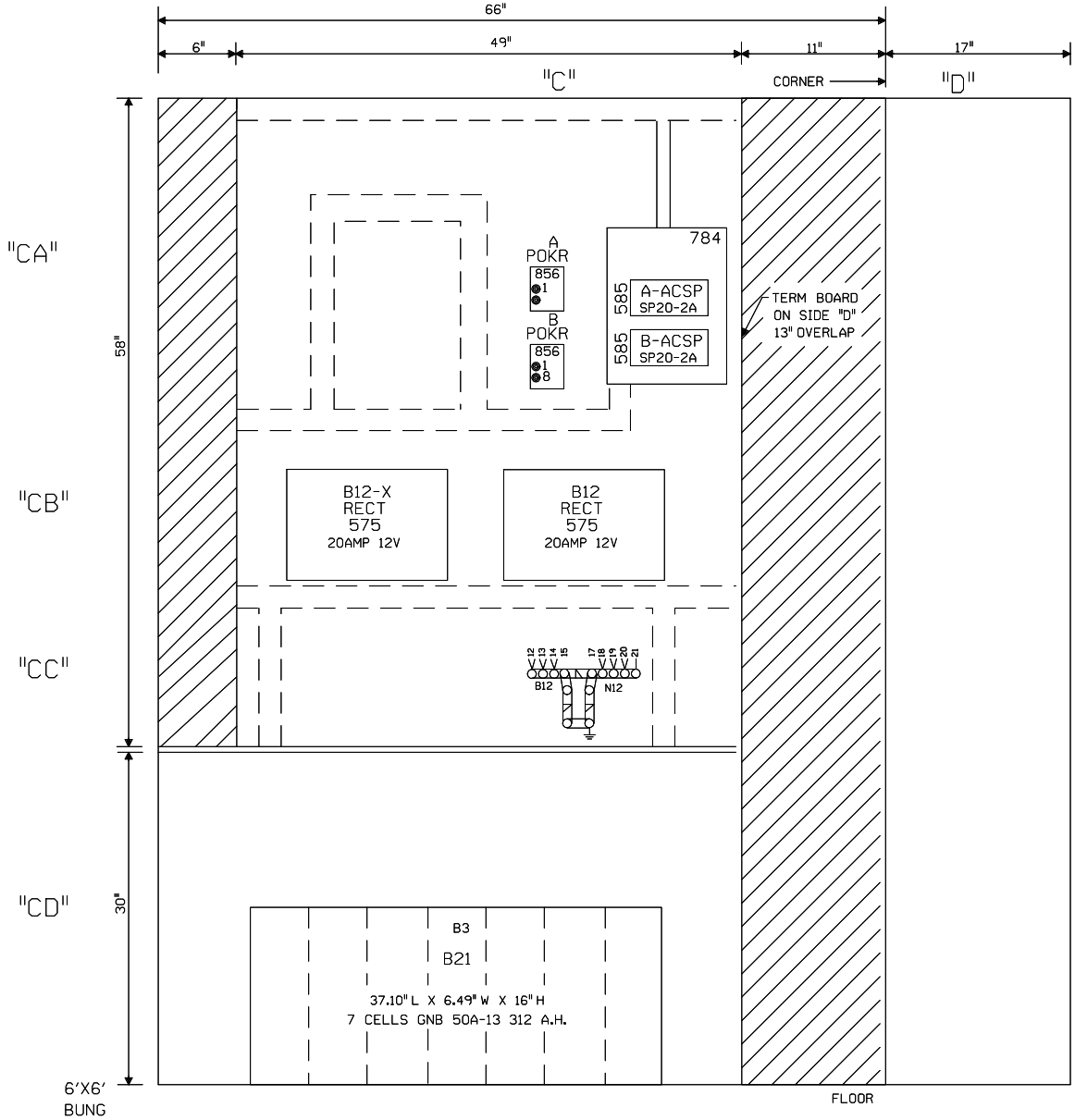


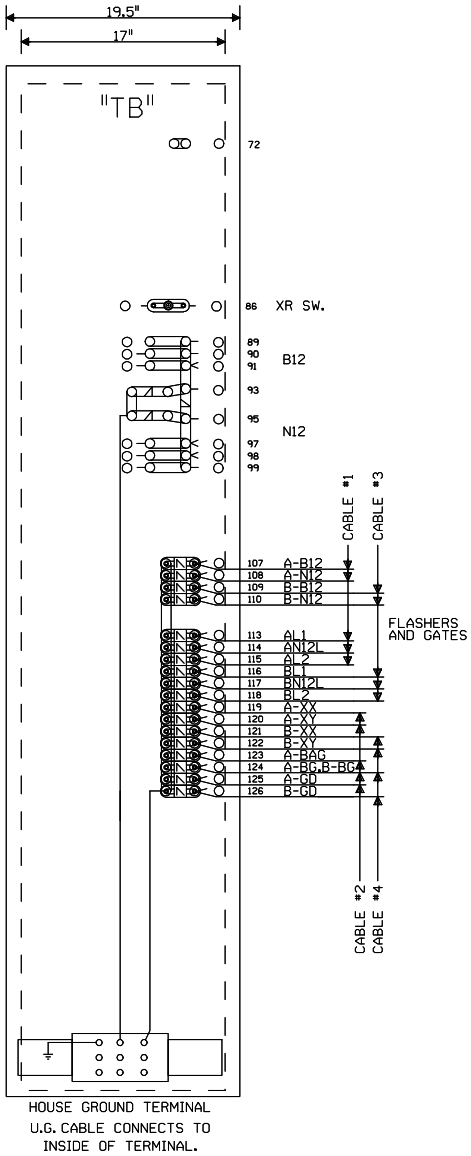


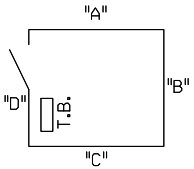


NOTE: ALL DIMENSIONS SHOWN
ARE APPROXIMATE.

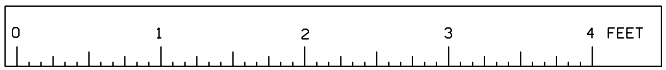


SCALE: 1.5 INCHES = 1 FOOT

NEW SHEET
SIDNEY, ILLINOIS
TR 269A
M.P. 136.70
VILLA GROVE SUBDIVISION
D.O.T.#166 899J

| | | | | | | | | | | | |
|---|---|---|---|---|---|---|---|---|---|---|---|
| | | | | | 1 11-15-06 INSTALL FLS/GATES & CONSTANT WARNING AT TR 269A M.P. 136.70 A.F.E. 59235 JJL / /CTC/RDD | MODIFICATION LEVEL | | UNION PACIFIC SIGNAL DESIGN | DES: CTC | UNION PACIFIC RAILROAD | DATE 11-15-06 |
| | | | | | | Q. A. LAST LEVEL CHECKED | DP | | DIG: CTC | 81ST STREET, ILLINOIS TO VILLA GROVE, ILLINOIS C.T.C. CIRCUITS | SHEET 8 |
| | | | | | | LAST LEVEL MOD THIS TYPICAL | DP | | CHK: JJL | | DWG 136.70 |
| | | | | | | LAST LEVEL BY DESIGNER | DP | | A.F.E. 59235 | | S-301 |
| | | | | | | CHANGED FROM TYPICAL? | Y | | ID= 030113670.8X | Office of AVP Engineering - Design Omaha, Nebraska | |

rev 02.26.07 4K GFC.9

# SOUTHBOUND

TO VILLA GROVE

TO 81ST STREET

SIG 1395: R, Y, G — 75CT, 120 OR 180CT

SIG 1365R: R, Y, G — C2, C7 — SW

SIG 1365L: R, Y, G — SW

SIG 1343R-L: R/R, R/L, Y/R, G/R — C2, C8, C4, C7 — SW — LUNAR

**BONGARD** — SB 15,925′ -0.24 76 143T

**BLOCK** — SB 12,700′ +0.25 74.7 143T

**SIDNEY** — SB 7,075′ +0.16 50.1 143T

M.P.139.6

1395 CL 1396

M.P.138.0

TR 275B C.M.P. 137.80

TR 269A (C.R. 600 N) M.P. 136.70

6′6′X8′4′ M.P.136.6 UAEK-S5

1365R CL

1365L CL

1366 R L

TR 265B (C.R. 700 N) M.P. 135.60

4′X4′ M.P.135.5 RRH-S5

6′X8′

PROGRAM ID: RRH-S5

1342L CL B A

1342R CL

6′6′X8′4′ M.P.134.2 UAEK-S5

1343 R L CL

FAS-522 M.P. 133.80

TR-249B M.P. 133.45

ST | R R NT | ST B R NT | ST R/B B | 1T R R/B NT | ST R/B R/B WT | ST R/B R 1T | B R/B NT

EC4H

#16 B

O1T R | A1342T (AC-DC) R O1T

NB 15,375′ +0.23 83.8 143T

N.B. 15,291′ +0.22 83.2 143T

NB 12,700′ -0.23 65.7 143T

N.B. 12,784′ -0.21 66.4 143T

NB 7,200′ -0.14 45.9 143T

CONNECTS ON DWG. 132.9 SH AS2

SIG 1396: R, Y, G — 75CT, 120CT

SIG 1366: R/R, Y/R, FY/R, G/R, R/L — C2, C4, C7 — SW

SIG 1342LA-B: R/R, Y/R, FY/R, G/R, Y/Y — C2, C4, C7, C3 — SW

SIG 1342R: R, Y, FY, G

AK (CODE 5) TO M.P.132.9

# NORTHBOUND

= IN

= OUT

CTC/JMW 11-15-06

= IN

= OUT

CTC/JMW 11-15-06

= IN

= OUT

CTC/JMW 03-30-06

= EXISTING, REVISE ORIGINAL IF A.C.'d

DESIGN LEVEL 1
CHICAGO SUBDIVISION
ASPECT CHART
M.P.126.0 TO M.P.139.6

LEGEND: SIGNAL ASPECTS
- FR = FLASHING RED
- R = RED
- L = LUNAR
- Y = YELLOW
- FY = FLASHING YELLOW
- G = GREEN
- R/R = DENOTES 2 UNIT SIGNAL
- (N) = DENOTES NORMAL SWITCH
- (R) = DENOTES REVERSE SWITCH

4 — 11-15-06 — INSTALL FLS/GATES & CONSTANT WARNING AT TR 265B M.P. 135.60 A.F.E. 59237 — JJL — /CTC/RDD

3 — 11-15-06 — INSTALL FLS/GATES & CONSTANT WARNING AT TR 269A M.P. 136.70 A.F.E. 59235 — JJL — /CTC/RDD

2 — 03-30-06 — INSTALL FLS/GATES & CONSTANT WARNING AT TR 275B M.P. 137.80 A.F.E. 57015 — BLT — /CTC/RDD

REV. 2-1-99
CONNECTION TRACK TO NS AT M.P.132.9 PER FIELD AC 12-15-98
CAC/CDL/NST/RCB

UNION PACIFIC — QUALITY PRODUCTIVITY SAFETY — SIGNAL DESIGN

| | |
|---|---|
| DES: | NST |
| DIG: | NST |
| CHK: | CDL |
| A.F.E. | 29530 |
| ID= 030113290.AS1 | |

UNION PACIFIC RAILROAD
81ST STREET, ILLINOIS
TO VILLA GROVE, ILLINOIS
C.T.C. CIRCUITS

OFFICE OF CHIEF ENG'R — OMAHA NEBR.

| | |
|---|---|
| DATE | 1-28-98 |
| SHEET | AS1 |
| DWG | 132.9 |

S-301-M

SIGNAL & COMMUNICATIONS DIVISION, SWISSVALE, PA. T1116 SH. 2270-1 PAGE

| | | |
|---|---|---|
| REV 3-4-83 INSTALL FLS GATES CHG (FAS 526) MCR | ST. LOUIS 12-15-76 DRAWN BY JAL CHECKED CCRR AFE 770329 7-11-78 | UNION PACIFIC R.R. DW 1395-96 PLACED IN SERVICE INSPECTED BY |

S-301-M SH. 1

TRACK CIRCUITS

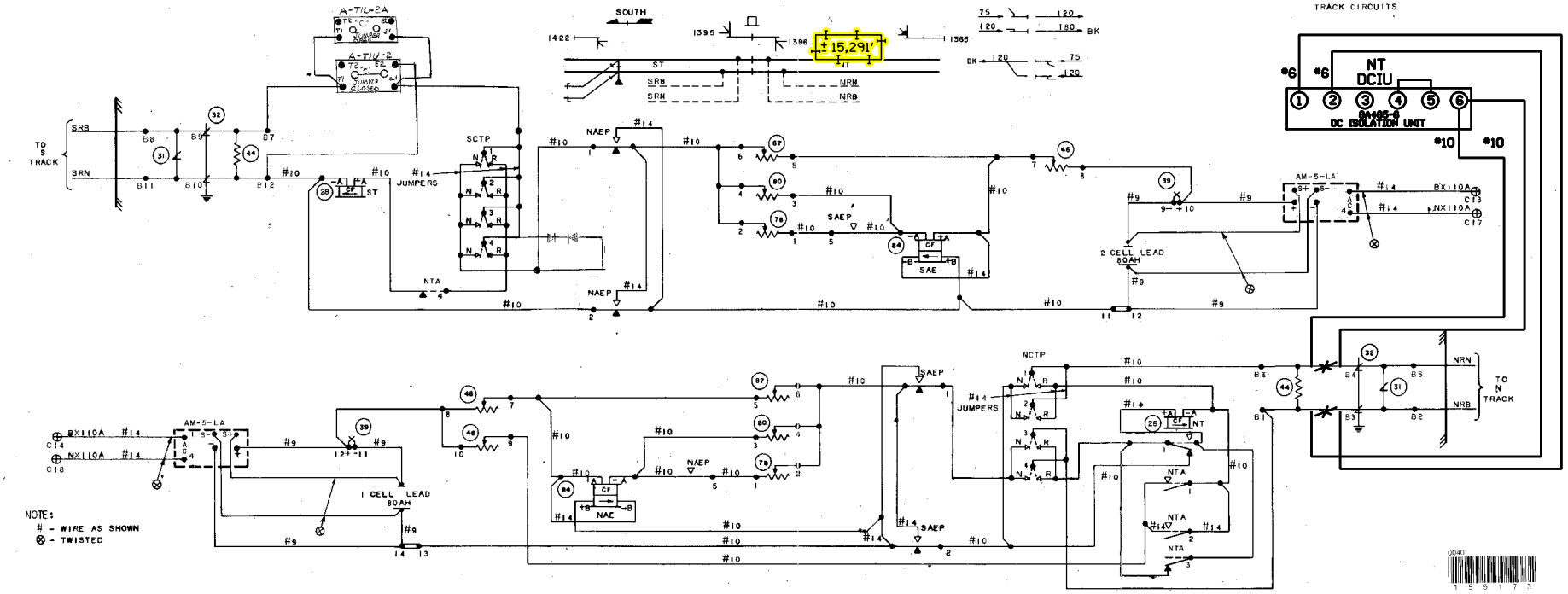


**CONSTRUCTION NOTE:**

1. INSTALL (1)-DC ISOLATION UNIT (P/N: 8A465-6) ON NT TRACK AT THIS LOCATION.

= IN

CTC/JMW
11-15-06

= IN

= OUT

CTC/JTW

BONGARD, ILLINOIS
SIGNALS 1395/1396
M.P. 139.60
VILLA GROVE SUBDIVISION

| | | | | | | | | | |
|---|---|---|---|---|---|---|---|---|---|
| | | | | | | 4 11-15-06 INSTALL FLS/GATES & CONSTANT WARNING AT TR 269A M.P. 136.70 A.F.E. 59235 CTC/RDD | 3 03-30-06 INSTALL FLS/GATES & CONSTANT WARNING AT TR 270B M.P. 137.80 A.F.E. 57015 RLT /CTC/RDD | UNION PACIFIC SIGNAL DESIGN | DES: CTC<br>DIG: CTC<br>CHK: RLT<br>A.F.E. 57015<br>ID= 030113960.1S |

UNION PACIFIC RAILROAD

81ST STREET, ILLINOIS TO VILLA GROVE, ILLINOIS
C.T.C. CIRCUITS

Office of AVP Engineering - Design Omaha, Nebraska

DATE 03-30-06
SHEET 1
DWG 139.60
S-301

TIF ID= 030113960.1S.TIF

SIGNAL & COMMUNICATIONS DIVISION, SWISSVALE, PA. TITLE SH. 2270-2 PAGE

| | | | |
|---|---|---|---|
| REV. 10-24-95 WLP CONTACT ADDED TO 95-96D CKT. 9-13-95 BBB/WITT.IND. | Rev 4-13-89 Stick Circuit (MAW) | ST. LOUIS 12-15-76 DRAWN BY JAL CHECKED AFE 70329 7-11-78 | UNION PACIFIC R.R. S-301-M DW 1395-96 SH. 2 PLACED IN SERVICE INSPECTED BY DECODING |

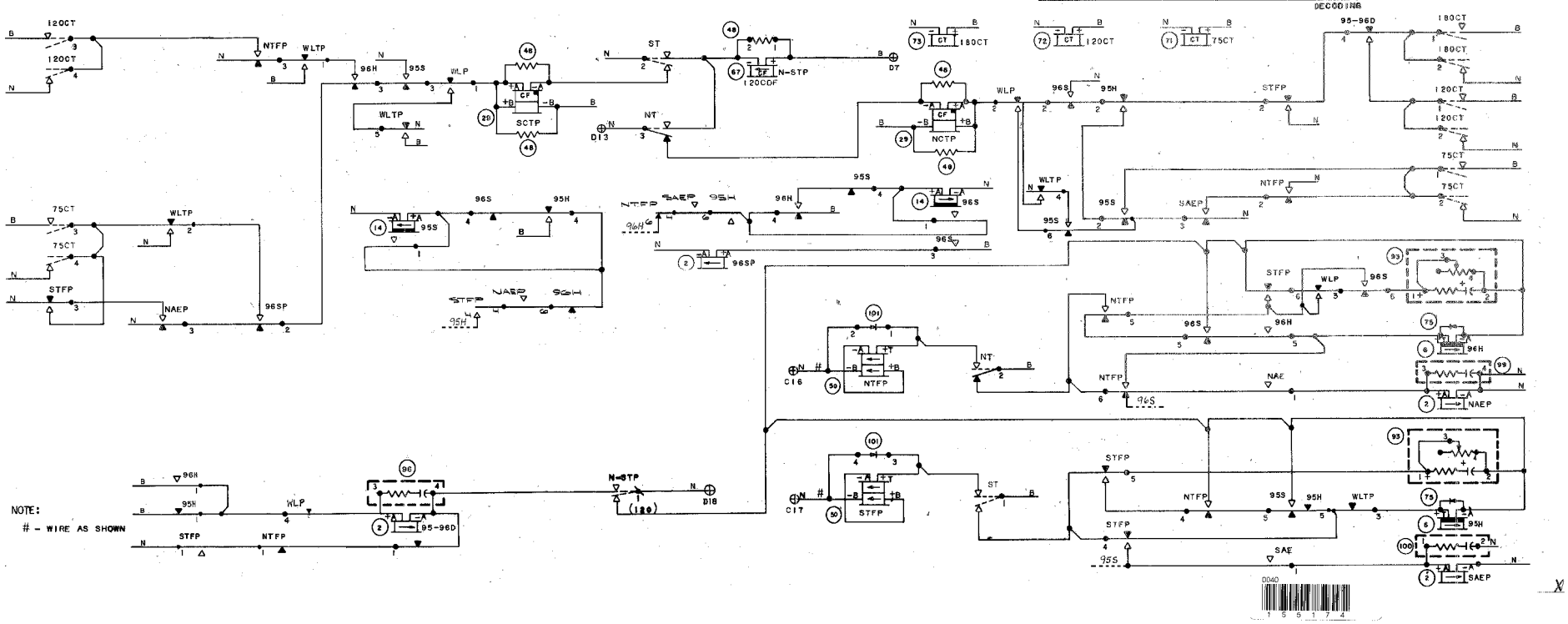


BONGARD, ILLINOIS
SIGNALS 1395/1396
M.P. 139.60
VILLA GROVE SUBDIVISION

| | | | | | | | | | | | | | | | |
|---|---|---|---|---|---|---|---|---|---|---|---|---|---|---|---|
| | | | | | | 5 | 11-15-06 | 4 | 03-30-06 | UNION PACIFIC | DES: CTC | UNION PACIFIC RAILROAD | DATE 03-30-06 |
| | | | | | | M.P. 136.70 A.F.E. 59235 | / /CTC/RDD | M.P. 137.80 A.F.E. 57015 | / /CTC/RDD | QUALITY PRODUCTIVITY SAFETY | DIG: CTC | 81ST STREET, ILLINOIS TO VILLA GROVE, ILLINOIS C.T.C. CIRCUITS | SHEET 2 |
| | | | | | | | | | | SIGNAL DESIGN | CHK: | | DWG 139.60 |
| | | | | | | | | | | | A.F.E. 57015 | Office of AVP Engineering - Design Omaha, Nebraska | S-301 |
| | | | | | | | | | | | ID= 030113960.2S | | |

TIF ID= 030113960.2S.TIF

SIGNAL & COMMUNICATIONS DIVISION, SWISSVALE, PA. T1116 SH. 2270-3 PAGE

| | | | |
|---|---|---|---|
| REV 4-13-89 STICK CIRCUIT (MAW) | ST. LOUIS 12-15-76 DRAWN BY JAL CHECKED AFE 770329 7-11-78 | UNION PACIFIC R.R. DW 1395-96 PLACED IN SERVICE INSPECTED BY | S-301-M SH. 3 |

SIGNAL LIGHTING - POWER DISTRIBUTION

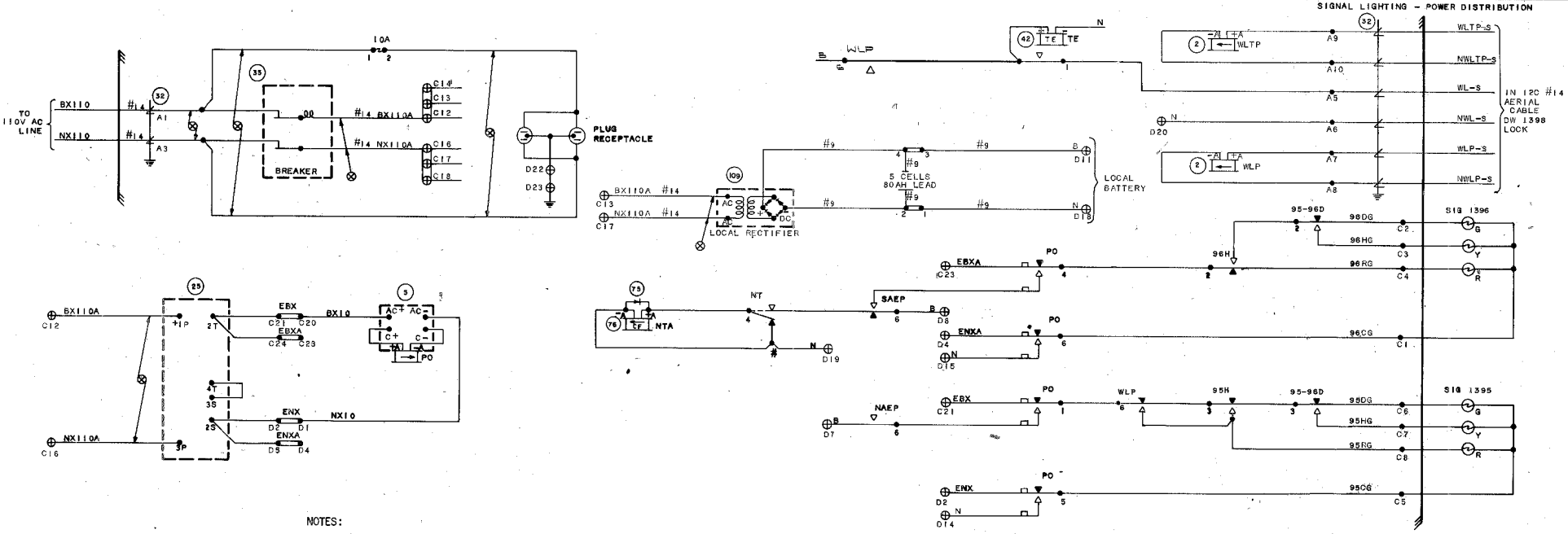


BONGARD, ILLINOIS
SIGNALS 1395/1396
M.P. 139.60
VILLA GROVE SUBDIVISION

| | | | | | | | | | | | |
|---|---|---|---|---|---|---|---|---|---|---|---|
| | | | | | | 4 11-15-06 M.P. 136.70 A.F.E. 59235 / /CTC/RDD | 3 03-30-06 M.P. 137.80 A.F.E. 57015 / /CTC/RDD | UNION PACIFIC QUALITY PRODUCTIVITY SAFETY SIGNAL DESIGN | DES: CTC DIG: CTC CHK: A.F.E. 57015 ID= 030113960.3S | UNION PACIFIC RAILROAD 81ST STREET, ILLINOIS TO VILLA GROVE, ILLINOIS C.T.C. CIRCUITS Office of AVP Engineering - Design Omaha, Nebraska | DATE 03-30-06 SHEET 3 DWG 139.60 S-301 |

TIF ID= 030113960.3S.TIF

SIGNAL & COMMUNICATIONS DIVISION, SWISSVALE, PA. T1116 SH. 2210-4 PAGE

| | | | | |
|---|---|---|---|---|
| REV. 10-24-95 WLP CONTACT ADDED TO 95-96D CKT. 9-13-95 BBB/WTT.IND. | REV 4-13-89 STICK CIRCUIT (MAW) | REV 3-4-93 INSTALL FLS GATES CH16 (CRAS 5266) M CB | ST. LOUIS 12-15-76 DRAWN BY JAL CHECKED AFE 770329 7-11-78 | UNION PACIFIC R.R. DW 1395-96 PLACED IN SERVICE INSPECTED BY |

S-301-M
SH. 4

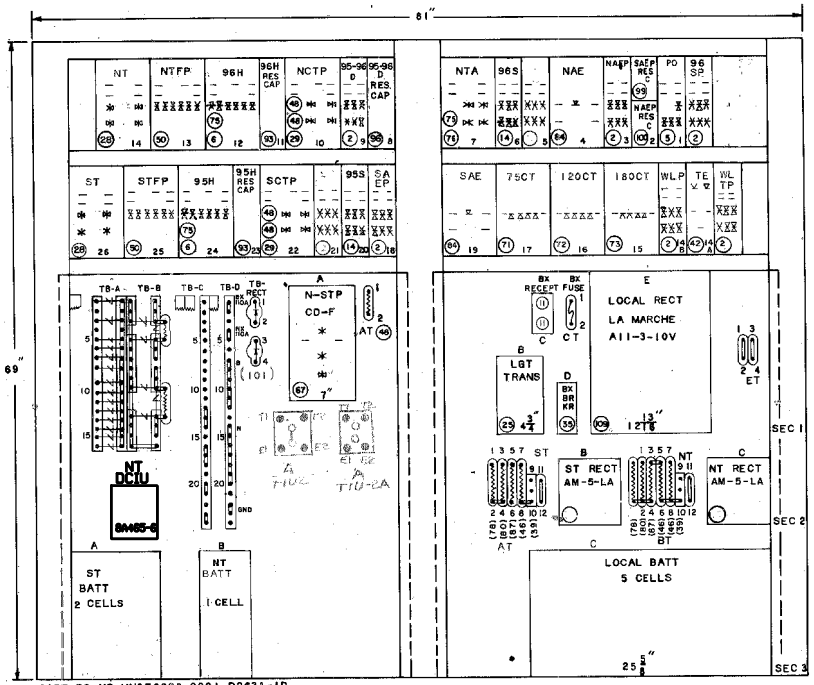


CASE PC NO UN376696-0001 D2638-1D
APPROX. SCALE 1-1/2" = 1'-0"
CASE 6'-9"

FRONT VIEW

CONTACT ARRANGEMENT REAR VIEW

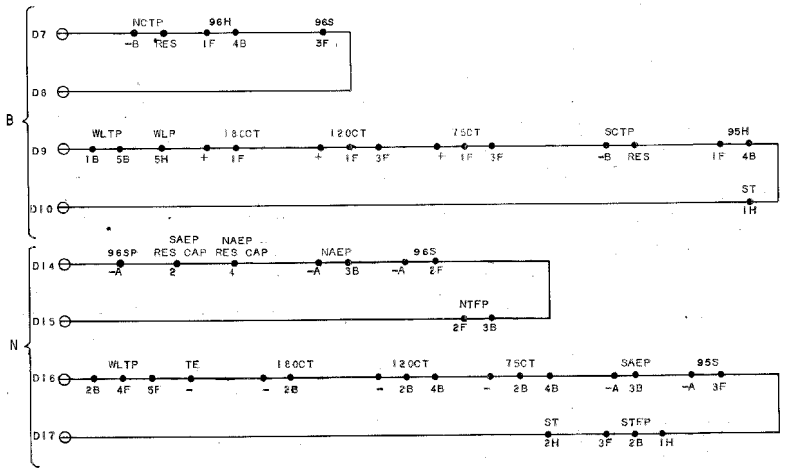


0040
1 5 5 1 7 6

——— = IN

CTC/JTW

BONGARD, ILLINOIS
SIGNALS 1395/1396
M.P. 139.60
VILLA GROVE SUBDIVISION

| | | | | | |
|---|---|---|---|---|---|
| 6 11-15-06 M.P. 136.70 A.F.E. 59235 / /CTC/RDD | 5 03-30-06 INSTALL FLS/GATES & CONSTANT WARNING AT TR 27B M.P. 137.60 A.F.E. 57015 / RLT /CTC/RDD | UNION PACIFIC QUALITY PRODUCTIVITY SAFETY SIGNAL DESIGN | DES: CTC DIG: CTC CHK: RLT A.F.E. 57015 ID= 030113960.4S | UNION PACIFIC RAILROAD 81ST STREET, ILLINOIS TO VILLA GROVE, ILLINOIS C.T.C. CIRCUITS Office of AVP Engineering - Design Omaha, Nebraska | DATE 03-30-06 SHEET 4 DWG 139.60 S-301 |

TIF ID= 030113960.4S.TIF