```
Minimum Program Steps Report
----------------------------

Location and SIN
----------------
DOT Number: 166899J
Milepost Number: 136.70
Site Name: SIDNEY, IL

SIN: 762010010016 *

* Parameter is part of office check number calculation.

MCF and Template Selection
--------------------------
MCF Name: GCP-T6X-02-1.mcf
MCF Revision: 021
MCFCRC: 6076E435

Template = 2H:2 Uni pairs, 4 Rem *

* Parameter is part of office check number calculation.

Minimum Program Steps
---------------------
TEMPLATE:  track 1-Uni, Island
Track 1 : GCP Frequency = 790 Hz
Track 1 : Approach Distance = 332 ft
Track 1 : Prime Warning Time = 25 sec
Track 1 : Prime UAX = IP *
Track 1 : Prime UAX Pickup = 15 sec *
Track 1 : GCP Transmit Level = Medium (Set in Field)
Track 1 : Isl Frequency = 11.5 kHz
Track 1 : Island Distance = 120 ft

TEMPLATE:  track 2-Uni,No Island
Track 2 : GCP Frequency = 285 Hz
Track 2 : Approach Distance = 3081 ft
Track 2 : Prime Warning Time = 25 sec
Track 2 : GCP Transmit Level = Medium (Set in Field)
Track 2 : Uni/Bi/Sim-Bidirnl = Sim. Bidirnl *

TEMPLATE:  track 3-Remote Prime
Track 3 : GCP Frequency = 970 Hz
Track 3 : Approach Distance = 263 ft
Track 3 : Prime Offset Distance = 69 ft
Track 3 : GCP Transmit Level = Medium (Set in Field)

TEMPLATE:  track 3 Daxes
Track 3 : Dax A Used = Yes *
Track 3 : Dax A Warning Time = 25 sec
Track 3 : Dax A Offset Distance = 69 ft

TEMPLATE:  track 4-Remote Prime
Track 4 : GCP Frequency = 348 Hz
Track 4 : Approach Distance = 2749 ft
Track 4 : Prime Warning Time = 25 sec
Track 4 : Prime Offset Distance = 332 ft
Track 4 : GCP Transmit Level = Medium (Set in Field)
Track 4 : Uni/Bi/Sim-Bidirnl = Sim. Bidirnl *

TEMPLATE:  track 5-Remote Prime
Track 5 : GCP Frequency = 790 Hz
Track 5 : Approach Distance = 1000 ft
Track 5 : Prime Warning Time = 25 sec
Track 5 : Prime Offset Distance = 332 ft
Track 5 : GCP Transmit Level = Medium (Set in Field)

TEMPLATE:  AND 1 XR
AND 1 XR Track 3 = Dax A *
AND 1 Enable Used = Yes *

TEMPLATE:  SSCC
SSCC 1 : Lamp Neutral Test = Off (Set in Field)
SSCC 2 : Lamp Neutral Test = Off (Set in Field)

TEMPLATE:  OOS
OOS Control = OOS IPs *
T2 OOS Control = OOS Input 1 *
T3 OOS Control = None *
T4 OOS Control = None *

TEMPLATE:  OOS T5/T6
T5 OOS Control = None *

TEMPLATE:  IP assignment 1
IN 1.2 = Out Of Service IP 1 *

TEMPLATE:  IP assignment SSCC
IN 7.1 = AND 1 XR Enable *

PREDICTORS:  track 3
Track 3 : Prime Used = No *

ADVANCED:  internal I/O 1
Int.1 Sets = T1 Prime UAX *
Int.1 Set by = T3 Dax A *

* Parameter is part of office check number calculation.

Check Numbers
-------------
Office Check No. (DT 4.6.0): 6BAF69F5
Office Check Number: 6BAF69F5
Config. Check Number: 0E6B89EC
(Based on MCF Revision 021)

Parameters not part of office check number calculation:

Track 1 : GCP Frequency = 790 Hz
Track 1 : Approach Distance = 332 ft
Track 1 : Prime Warning Time = 25 sec
Track 1 : GCP Transmit Level = Medium (Set in Field)
Track 1 : Isl Frequency = 11.5 kHz
Track 1 : Island Distance = 120 ft
Track 2 : GCP Frequency = 285 Hz
Track 2 : Approach Distance = 3081 ft
Track 2 : Prime Warning Time = 25 sec
Track 2 : GCP Transmit Level = Medium (Set in Field)
Track 3 : GCP Frequency = 970 Hz
Track 3 : Approach Distance = 263 ft
Track 3 : Prime Offset Distance = 69 ft
Track 3 : GCP Transmit Level = Medium (Set in Field)
Track 3 : Dax A Warning Time = 25 sec
Track 3 : Dax A Offset Distance = 69 ft
Track 4 : GCP Frequency = 348 Hz
Track 4 : Approach Distance = 2749 ft
Track 4 : Prime Warning Time = 25 sec
Track 4 : Prime Offset Distance = 332 ft
Track 4 : GCP Transmit Level = Medium (Set in Field)
Track 5 : GCP Frequency = 790 Hz
Track 5 : Approach Distance = 1000 ft
Track 5 : Prime Warning Time = 25 sec
Track 5 : Prime Offset Distance = 332 ft
Track 5 : GCP Transmit Level = Medium (Set in Field)
SSCC 1 : Lamp Neutral Test = Off (Set in Field)
SSCC 2 : Lamp Neutral Test = Off (Set in Field)

Comments
--------
<none>

Configuration Package File
--------------------------
Filename: 030113670_166899J.pac
Path: Z:\Awaiting W.O. Approvals\2006\up06293\GCP Program\
Date/Time: 8/21/2009 13:46:49
```

NEW SHEET
SIDNEY, ILLINOIS
TR 269A
M.P. 136.70
VILLA GROVE SUBDIVISION
D.O.T.#166 899J

1 11-15-06
INSTALL FLS/GATES & CONSTANT WARNING
AT TR 269A
M.P. 136.70
A.F.E. 59235
JJL
/ /CTC/RDD

NOTE: Actual OFFSET and ISLAND distances must be verified by field personnel.

UNION PACIFIC
QUALITY PRODUCTIVITY SAFETY
SIGNAL DESIGN

DES:	CTC
DIG:	CTC
CHK:	JJL
A.F.E.	59235
ID= 030113670.3AX	

UNION PACIFIC RAILROAD

81ST STREET, ILLINOIS TO
VILLA GROVE, ILLINOIS
C.T.C. CIRCUITS

Office of AVP Engineering - Design Omaha, Nebraska

DATE	11-15-06
SHEET	3A
DWG	136.70

S-301

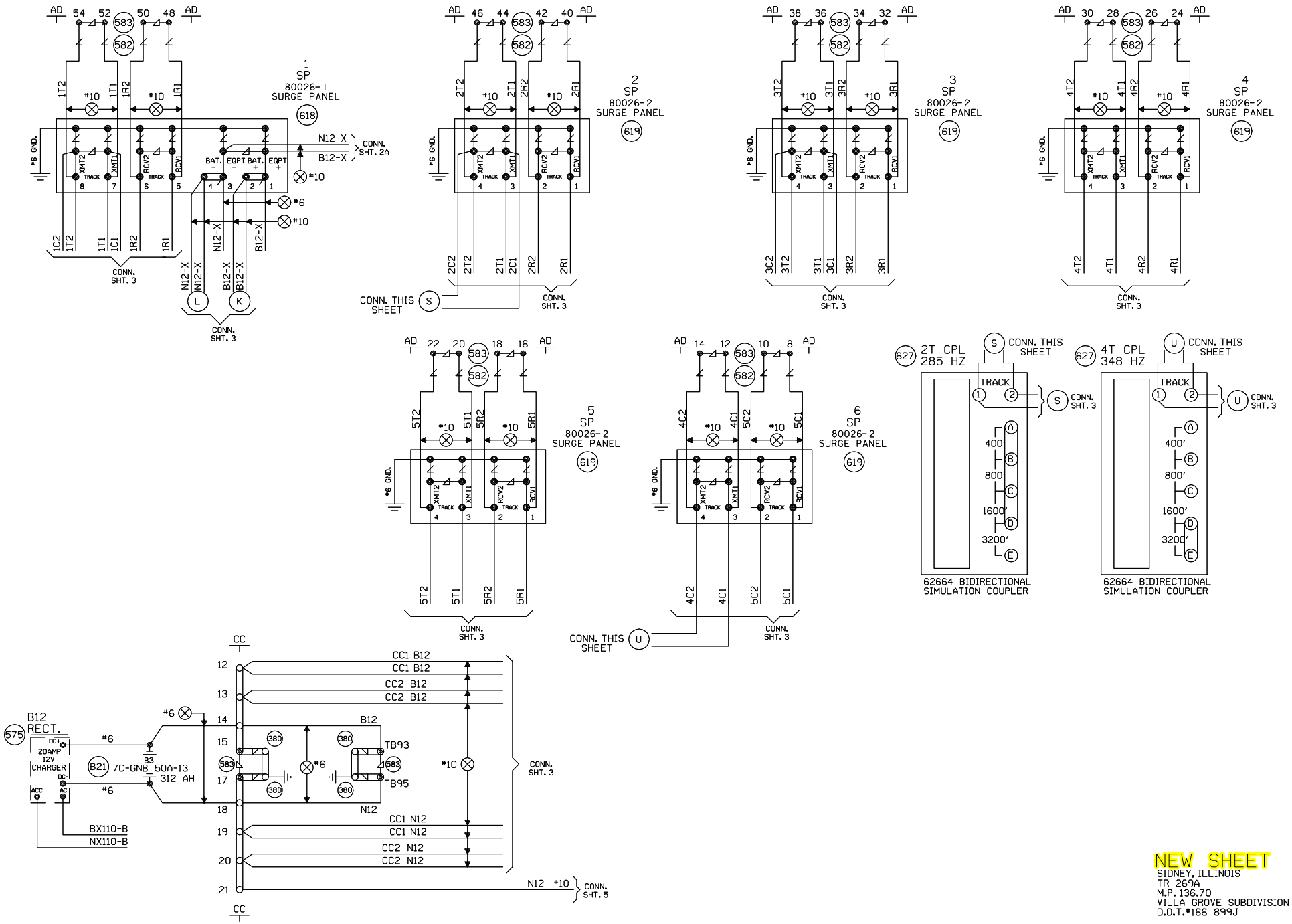

NEW SHEET
SIDNEY, ILLINOIS
TR 269A
M.P. 136.70
VILLA GROVE SUBDIVISION
D.O.T.#166 899J

1 11-15-06 INSTALL FLS/GATES & CONSTANT WARNING AT TR 269A M.P. 136.70 A.F.E. 59235 JJL /CTC/RDD	MODIFICATION LEVEL		UNION PACIFIC QUALITY PRODUCTIVITY SAFETY SIGNAL DESIGN	DES: CTC	UNION PACIFIC RAILROAD	DATE 11-15-06
	Q. A. LAST LEVEL CHECKED	DP		DIG: CTC	81ST STREET, ILLINOIS TO VILLA GROVE, ILLINOIS	SHEET 4
	LAST LEVEL MOD THIS TYPICAL	DP		CHK: JJL	C.T.C. CIRCUITS	DWG 136.70
	LAST LEVEL BY DESIGNER	DP		A.F.E. 59235	Office of AVP Engineering - Design Omaha, Nebraska	S-301
	CHANGED FROM TYPICAL?	Y		ID= 030113670.4X		
	REV 02.26.07 4K 4TKSPGFC.4					

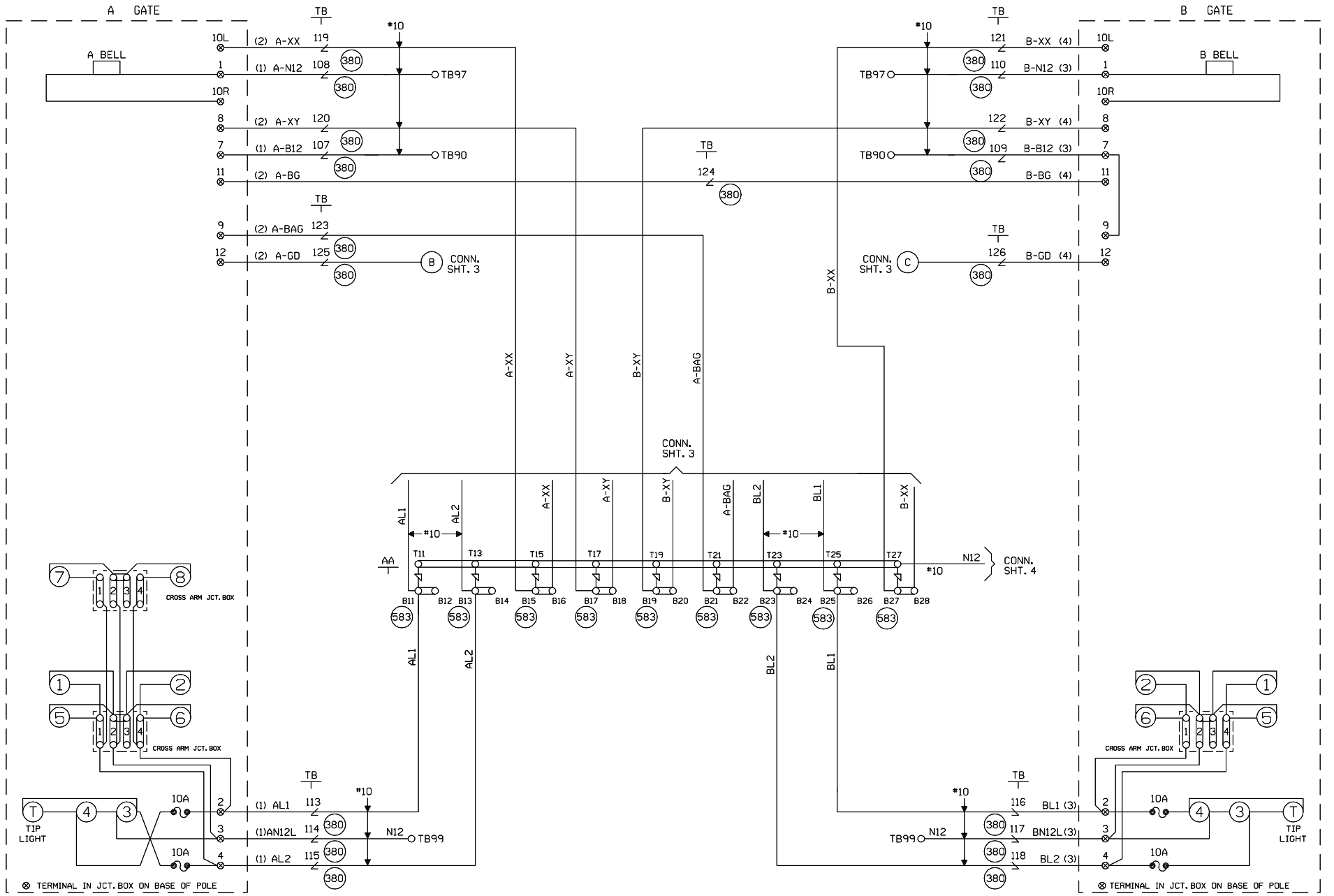

CABLE TABULATION

CABLE NO. 1 5C. NO.6 U.G.B.T.
CABLE NO. 2 7C. NO.14 U.G.B.T.
CABLE NO. 3 5C. NO.6 U.G.B.T.
CABLE NO. 4 7C. NO.14 U.G.B.T.

NEW SHEET
SIDNEY, ILLINOIS
TR 269A
M.P. 136.70
VILLA GROVE SUBDIVISION
D.O.T.#166 899J

1 11-15-06 INSTALL FLS/GATES & CONSTANT WARNING AT TR 269A M.P. 136.70 A.F.E. 59235 JJL /CTC/RDD	MODIFICATION LEVEL		UNION PACIFIC QUALITY PRODUCTIVITY SAFETY SIGNAL DESIGN	DES: CTC	UNION PACIFIC RAILROAD
	Q. A. LAST LEVEL CHECKED	DP		DIG: CTC	81ST STREET, ILLINOIS TO VILLA GROVE, ILLINOIS C.T.C. CIRCUITS
	LAST LEVEL MOD THIS TYPICAL	DP		CHK: JJL	
	LAST LEVEL BY DESIGNER	DP		A.F.E. 59235	
	CHANGED FROM TYPICAL?	Y		ID= 030113670.5X	Office of AVP Engineering - Design Omaha, Nebraska
	REV 02.26.07 4K GFSLTYP.5				

DATE 11-15-06
SHEET 5
DWG 136.70
S-301