CHICAGO 208.
M-9 SHEET 2 OF 3
SIDNEY ILL. TO FINDLAY, ILL.

M-9 SIDNEY ILL. TO FINDLAY, ILL. CHICAGO 208 M-101-2-135

REVISIONS

REV. 11-29-94 UPGRADE KINGS THRU TUSCOLA, IL AC BY LJG	REV. 11-20-96 REMOVE NEW ATT. & ADD NEW ATT. ON BLK #20 BY: MJK/RBT CC:WITT/WWW
REV. 1-5-95 KING UPGRADE 2ND & BEECH ST AC BY LJG JGB/WAR	REV. 2-15-96 REV. CONNECTION DIAGRAM FOR NEW BLOCK BY: LJF CC:WITT/WWW
REV. 2-27-96 INSTALL B-L INTER AT MP. 133.40 12-28-94 JGB/WAR	REV. 2-15-96 CAC/CDL/WST/RCB
REV. 2-28-96 ADD NEW ATT. ON BLK #20 BY: MJK/LMJ 12-28-94 JGB/WAR	REV. 4-26-99 INSTALLED GATES & SIGNALS AT MP. 133.40 BY: JPP CC: 27826
REV. 9-24-96 REMOVE SIDETRACK AT MP. 135 WRH/WAR	REV. 4-26-99 INSTALLED GATES & SIGNALS AT MP. 133.40 BY: LJF CC: 27827
REV. 2-25-96 KING PROJ. AT JACKSON, HARRISON & MARKET STREET BY: LJF CC:WITT/WWW	REV. 4-26-99 INSTALLED GATES & SIGNALS AT MP. 133.40 BY: LJF CC: 27828
REV. 9-6-96 LS. 8-16-96 ACES BY: JT	REV. 9-24-99 ADD NEW ATT. ON BLK #20 BY: MJK/LMJ 12-28-94 JGB/WAR
REV. 10-17-96 INSTALL KING PUSH BUTTONS PER TRACK PLAN BY: LJF 9-30-96 TTC/RBA CC:CTC	REV. 12-7-00 REMOVE NEW ATT. ON BLK #20 BY: MJK/LMJ 12-28-94 JGB/WAR
REV. 01-23-97 MAP UPDATED PER HARD COPY IN DRAWER. 01-23-97 WJB/CDM	REV. 7-16-01 INSTALL ELS/GATES & SIGNALS WITH WARNING SIGNS AT MP. 133.40 BY: LJF CC: 24050
REV. 4-27-98 ADD NEW ATT. ON BLK #20 BY: MJK/LMJ 12-28-94 JGB/WAR	JTB / /CTC/JNM 8-29-02
REV. 4-27-98 ADDED NEW BATTERY BY: MJK/LMJ CC:CTC/JNM	INSTALL ELS/GATES & SIGNALS WITH WARNING SIGNS AT MP. 133.40 BY: LJF CC: 08534
REV. 8-25-98 ADDED NEW AT HENSON, CLINTONT & MARKET ST. AT MP. 134.25 TO MATCH ATT. 17A28, 17A27, 17A26 BY: LJF 6-2-98 CC:WITT/GAB/SJE	/ /JNM/PBT&RPS

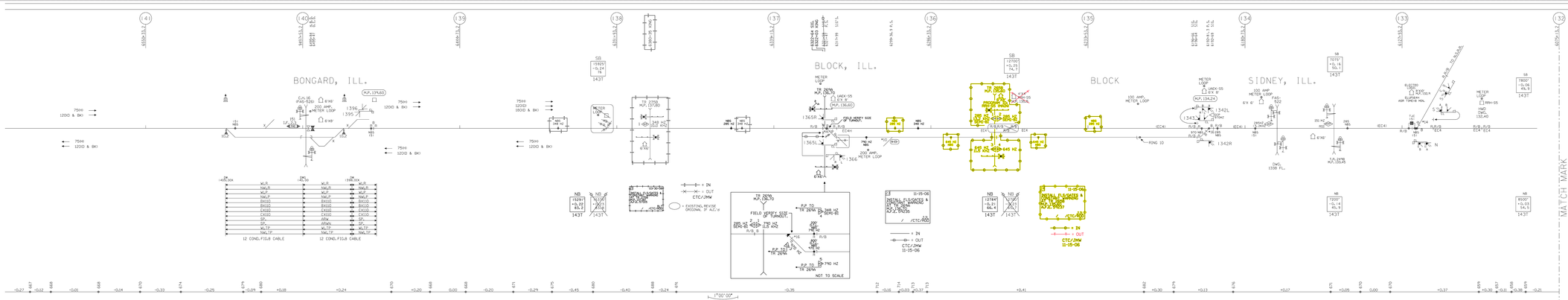

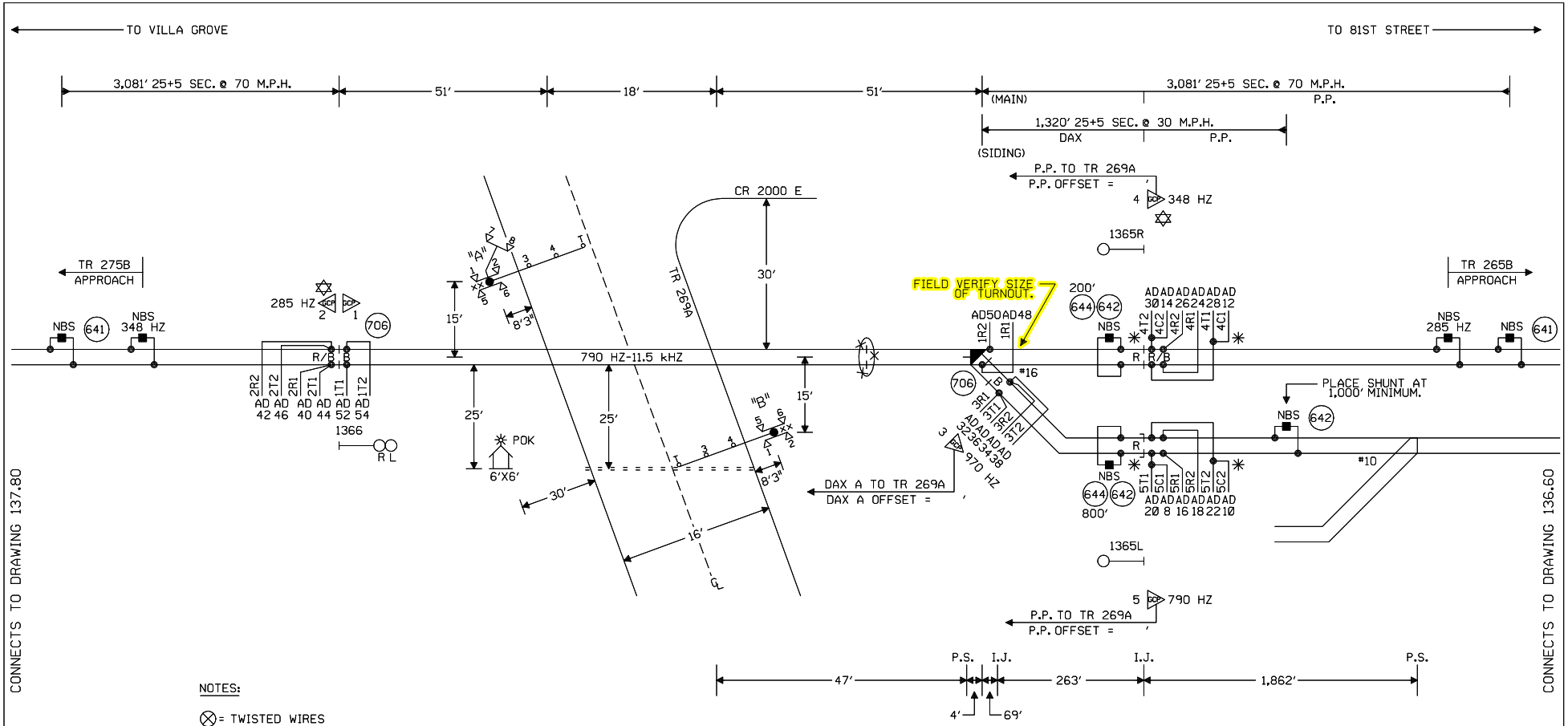

NOTES:

⊗ = TWISTED WIRES
INSULATED 1 TWIST PER FT.
ALL TRACK WIRES 2C. #6

TRANSMITTER AND RECEIVER LEADS TO BE SEPARATED BY AT LEAST 12" IN TRENCH, LENGTHS SHOULD NOT EXCEED MANUFACTURER'S RECOMMENDATION.

TOP OF FOUNDATION TO BE AT SAME ELEVATION AS THE SURFACE OF THE TRAVELED WAY & NO MORE THAN 4" ABOVE THE SURFACE OF THE GROUND.

ALL BUNGALOW WIRING TO BE #16 AWG FLEX UNLESS OTHERWISE SPECIFIED EXCEPT ALL GROUND WIRE TO BE #6 AWG FLEX OR LARGER.

PORTABLE GENERATOR EXTENSION CORD FOR 240V TO 240V IS PROVIDED AS WELL AS A 120V TO 240V ADAPTER.

ALL WIRING IN GATE MECHANISM TO BE #10 "AWG FLEX".

REFER TO UP STANDARD DWG FOR BUNGALOW GROUNDING.

ALL LIGHTS TO BE 12" ROUNDELS.

= = = = = = 4" X 40' CONDUIT

LIGHTS: LED LIGHTS

GATE A: 16'
GATE B: 16'

xx = BELL

✡ = GCP TO OPERATE IN SEMI-BI DIRECTIONAL MODE. USE TAB 627 COUPLER.

S ←—○—→ N

CONSTRUCTION NOTES:

1. IF THIS CROSSING IS WORK ORDER APPROVED PRIOR TO TR 275B AT M.P. 137.80 (W.O. 57015) THEN INSTALL (1)-DC ISOLATION UNIT (P/N: 8A465-6) ON ST TRACK AT M.P. 136.60 AND (1)-DC ISOLATION UNIT (P/N: 8A465-6) ON NT TRACK AT M.P. 139.60.
2. RELOCATE SIGNALS 1366L-R 51' SOUTH OF ROADWAY EDGE.

✳ TIE THE CHECK AND TRANSMIT TRACK WIRES TOGETHER AT OR NEAR THE BOOTLEG CONNECTION AND RUN A SINGLE WIRE TO THE RAIL.

—×—×— = OUT

NEW SHEET
SIDNEY, ILLINOIS
TR 269A
M.P. 136.70
VILLA GROVE SUBDIVISION
D.O.T.#166 899J

1 11-15-06 INSTALL FLS/GATES & CONSTANT WARNING AT TR 269A M.P. 136.70 A.F.E. 59235 JJL /CTC/RDD	MODIFICATION LEVEL		UNION PACIFIC QUALITY PRODUCTIVITY SAFETY SIGNAL DESIGN	DES: CTC	UNION PACIFIC RAILROAD	DATE 11-15-06
	Q. A. LAST LEVEL CHECKED	DP		DIG: CTC	81ST STREET, ILLINOIS TO VILLA GROVE, ILLINOIS C.T.C. CIRCUITS	SHEET 1
	LAST LEVEL MOD THIS TYPICAL	DP		CHK: JTB		DWG 136.70
	LAST LEVEL BY DESIGNER	DP		A.F.E. 59235		S-301
	CHANGED FROM TYPICAL?	Y		ID= 030113670.1X	Office of AVP Engineering - Design Omaha, Nebraska	
	REV 02.26.07 4K 1TKBG.1					

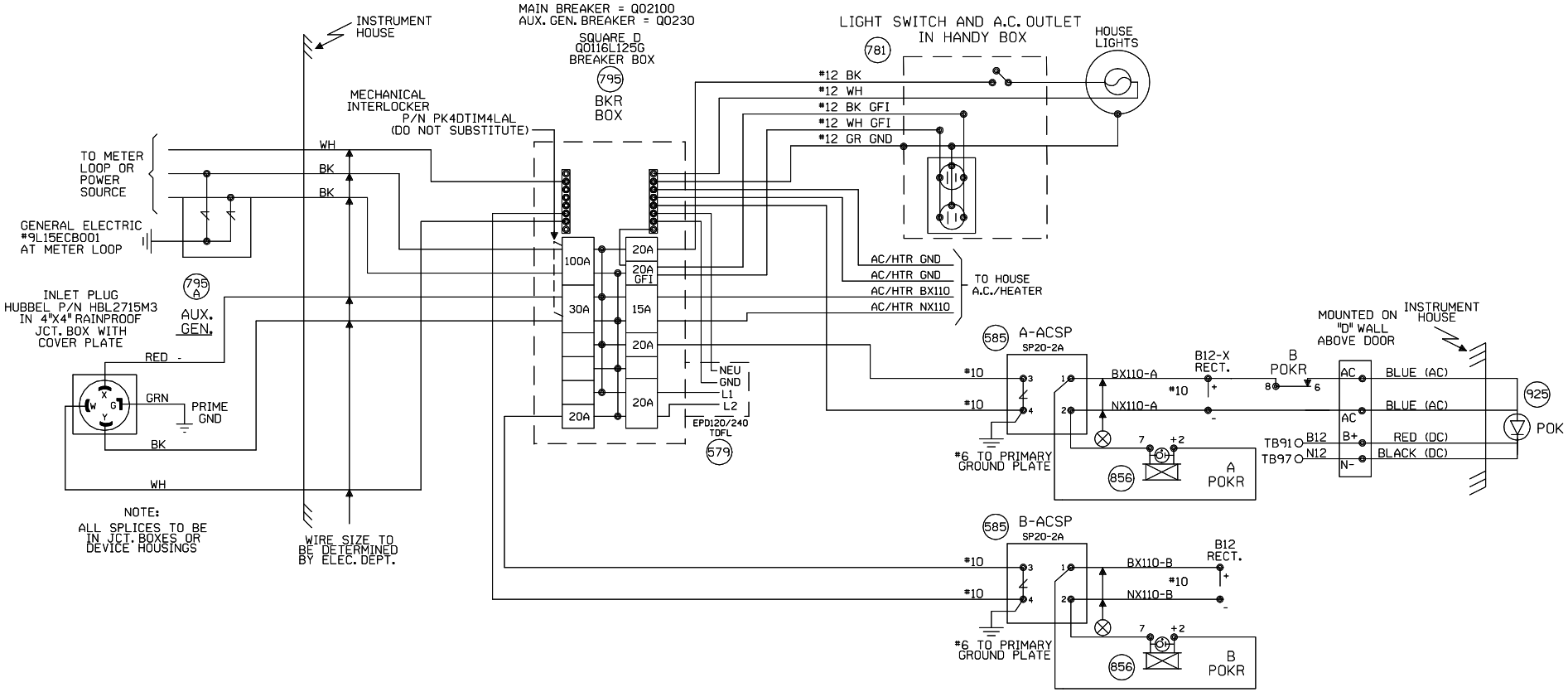

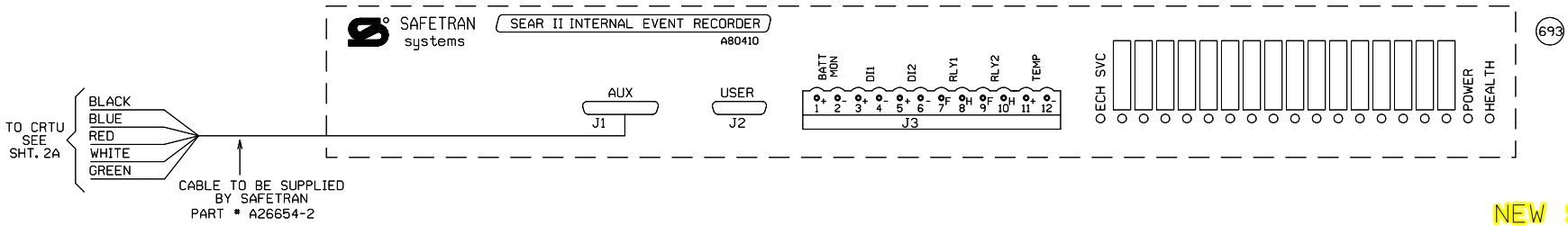

NEW SHEET
SIDNEY, ILLINOIS
TR 269A
M.P. 136.70
VILLA GROVE SUBDIVISION
D.O.T.#166 899J

| | | |

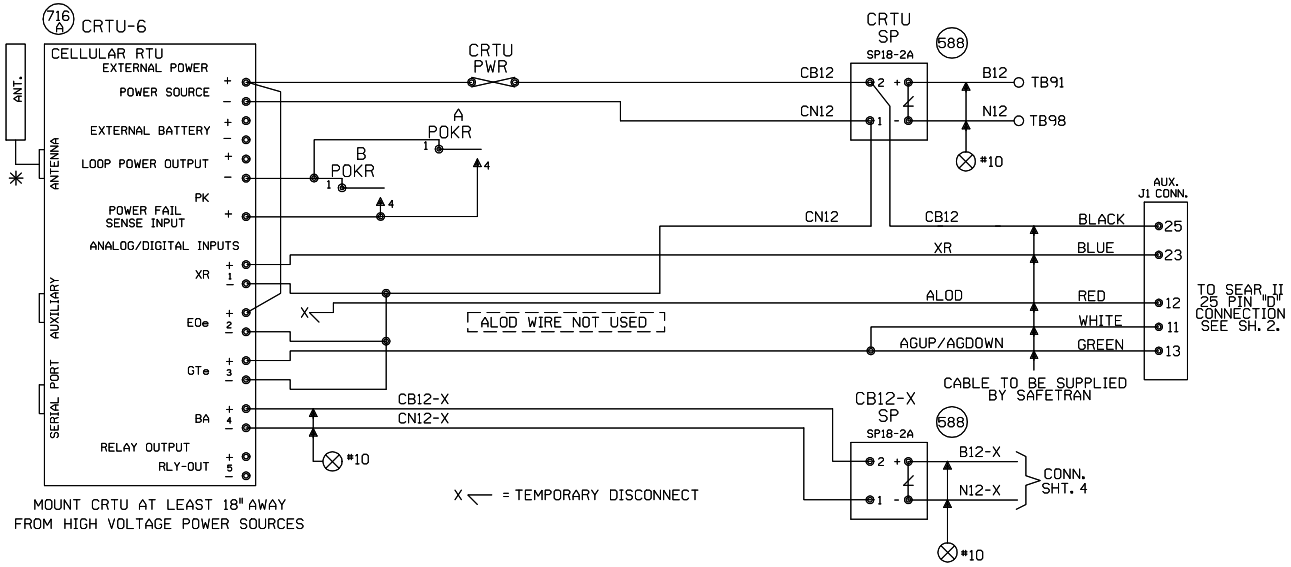

NOTES:

ALL DIODES 1N5060 OR 1N4004 UNLESS OTHERWISE NOTED.

✳ MOUNT ANTENNA ON TOP OF HOUSE.
INSTALL ANTENNA CABLE AND CHOKE PER TECH BULLENTIN #99-0015-00

ALL WIRES #18 UNLESS OTHERWISE NOTED.

ALL UNUSED 'NC' INPUTS MUST BE TIED HIGH TO BATTERY

ALL UNUSED ANALOG INPUTS MUST BE TIED HIGH TO BATTERY

ALL UNUSED 'NO' INPUTS MUST BE DISCONNECTED

NORMAL STATE FOR ANALOG CHANNELS IS EQUAL TO THE STORED NOMINAL VOLTAGE +120% OR -81%

CRTU FRONT PANEL DISPLAY CHART INDICATES NORMAL STATE

■ DIGITAL INPUT HIGH, OR POWER FAIL INPUT CLOSED
□ DIGITAL INPUT LOW, OR POWER FAIL INPUT OPEN

■ L ← LATCH IS SET BECAUSE CRTU DETECTED AN ALARM CONDITION
12.06V L

'sRUN MODE' 'sRUN MODE-SILENT' ← CRTU RADIO IS DISABLED. REPROGRAM CRTU WITH LAPTOP.

ANALOG AND AC INPUT MODULES AND SURGE PROTECTORS MUST BE MOUNTED LESS THAN 18" FROM CRTU

ANALOG MODULES CONVERT DC VOLTAGE TO A SQUARE WAVE. A WORKING ANALOG MODULE WILL HAVE 4.5VDC TO 8.0VDC BETWEEN 5VOUT+ AND 6VOUT-. WHERE, 0VOLTS = 0HZ OUT, 30VOLTS = 10KHZ OUT, AND 15VOLTS = 5KHZ OUT

MAKE SURE CRTU IS PROGRAMMED WITH CALIBRATION SETTINGS.

CRTU CH4 CAN BE CONNECTED TO EITHER SP18 OR EQUIPMENT SIDE OF MDSA1, TAB 565

UNIT INSTALLATION AND SETUP

R.R. SITE ID WHERE: SSSS = 4 CHARACTER SUBDIVISION ID. FILL WITH PRECEDING ZEROS AS REQUIRED. THE MAIN TRACK SUBDIVISION ID* IS IN THE CURRENT TIMETABLE. INDUSTRIAL LEADS, LEASED, AND LEAD TRACKS LISTED WITHIN THE SUBDIVISION MAY HAVE THEIR OWN UNIQUE SUBDIVISION ID*. ALWAYS REFER TO CURRENT PRINTED COPY OF THE TIMETABLE.
LLLLLLLL = 8 CHARACTERS USE DOT* AT CROSSINGS, AND
WDLLLLLL = USE 'WD' THEN MP* AT WAYSIDE LOCATIONS.
EXAMPLE = 0785WD1801.5UT
HBLLLLLL = USE 'HB' THEN MP* AT HBD SITES.
EXAMPLE = 0100-HB55.62TX
THE MP* MUST USE A DECIMAL POINT TO SEPARATE NUMBERS. FILL WITH PRECEDING DASHES AS REQUIRED.
AA = 2 CHARACTER STATE NAME FOR ALL LOCATIONS. MUST BE 14 CHARACTERS LONG, NO SPACES ALLOWED.

SITE IDENTIFIER: SSSSLLLLLLLLAA	0040-166899JIL
OPERATION TO RESUME:	RUN
SIGNAL STRENGTH dBm	
CARRIER ID	
FIRMWARE VERSION	2.3.
SERIAL NUMBER	
BOOT VERSION:	
CMM VERSION:	
MIN ASSIGNMENT	
ESN: (MICROBURST ONLY)	
CONFIGURATION NET	DIGITAL
SILENCE INTERVAL	60 MINUTES
HEALTHCHECK INTERVAL	EVERY 2 DAYS
ALARM DEFER DELAY	240 MINUTES (4 HOURS)
SIGNAL STATUS	
SCADANET STATUS	
CALIBRATION CONSTANT CH1	
CALIBRATION CONSTANT CH2	
CALIBRATION CONSTANT CH3	
CALIBRATION CONSTANT CH4	
CALIBRATION CONSTANT PS	

FIELD PROVIDES: SAMPLED NOMINAL VOLTAGES, SCADANET STATUS CALIBRATION CONSTANTS, SERIAL NUMBER, AND SIGNAL STATUS.

CHANNEL SETUP - STANDARD CONFIGURATION 32:XR,EOe,GTe,Ba

CHANNEL NORMAL STATE	SENSE (NO/NC)	NAME FUNCTION	RECOGNITION DELAY SECONDS ACTIVE	RECOGNITION DELAY SECONDS NORMAL	RETURN TO NORMAL	REPORTING MODE	ALARM LINKED CHANNEL	ALARM LINKED CRITERIA
POWER FAIL □ (CH5) ■	POWER FAIL DETECT NO	PF1n-PK AC POWER FAIL	7,200 ALARM	300 NORMAL	ENABLED	ALERT	DISABLED	N/A
CH1 ■ □	DIGITAL INPUT NC	CH1-XR XR DOWN TO LONG	1,800 ALARM	1 NORMAL	ENABLED	ALERT	DISABLED	N/A
CH2 □ ■	DIGITAL INPUT NO	CH2-EOe LIGHT OUT	120 ALARM	10 NORMAL	ENABLED	ALERT	DISABLED	N/A
CH3 □ ■	DIGITAL INPUT NO	CH3-GTe GATES NOT UP/DOWN	120 ALARM	10 NORMAL	ENABLED	ALERT	DISABLED	N/A
CH4 STORED NOMINAL VOLTAGE	ANALOG INPUT N/A	CH4-Ba/V BATTERY MONITOR BATTERY LOW	600 ALARM	1200 NORMAL	ENABLED	ALERT W/UPDATE	DISABLED	N/A
POWER SOURCE (CH6)	ANALOG INPUT N/A	PS-Ba/V BATTERY MONITOR BATTERY LOW	600 ALARM	1200 NORMAL	ENABLED	ALERT W/UPDATE	DISABLED	N/A

EVENT LOGGING ENABLED OPTIONS

ANALOG VALUE SENT

DIGITAL EVENTS

PF1n-PK
CH1-XR
CH2-EOe
CH3-GTe

ANALOG CHANNEL	USEFUL RANGE VOLTS LOW	USEFUL RANGE VOLTS HIGH	DISPLAYED RANGE VOLTS LOW	DISPLAYED RANGE VOLTS HIGH	RELATIVE ALARM POINT LOW	RELATIVE ALARM POINT HIGH	ABSOLUTE ALARM POINT LOW	ABSOLUTE ALARM POINT HIGH	AUTOMATIC UPDATE INTERVAL	STORED NOMINAL VOLTAGE	SAMPLED NOMINAL VOLTAGE
CH4	0.0	30.00	0.0	30.00	81%	120%	10.0	29.0	14 DAYS	12.69	
POWER SOURCE	0.0	30.00	0.0	30.00	81%	120%	10.0	29.0	14 DAYS	12.69	
RELAY OUTPUT	NAME RLY-OUT		ACTIVE SET-UP-OPEN		NORMAL CLR-DN-CLOSE		PULSE DURATION		15 SECONDS	StdCfg Ver: 2.3.3 REV'D 9-20-02	

MAINTENANCE OPERATIONS

TO START OR ABORT ANY PROCEDURE

1. PRESS THE 'CANCEL' BUTTON FIRST

WHEN RESPONDING TO A CALL, PUT THE CRTU IN THE 'SILENCE ALARMS' MODE

1. PRESS 'SELECT' AND THEN '+ ARROW' BUTTON UNTIL
   DISPLAY: ACTION?
   SILENCE ALARMS
2. PRESS THE 'SELECT' BUTTON TWICE
3. CORRECT PROBLEM AND SIMULATE NORMAL TRAIN MOVEMENT THROUGH THE LOCATION
4. EXAMINE EACH CHANNEL ON THE CRTU
5. PRESS THE '+/- ARROW' BUTTON VERIFY ALL CHANNELS INDICATE A NORMAL STATE NORMAL STATES ARE ON THE CHANNEL SETUP CHART

CLEAR TIMERS, LATCHES AND SEND ALL NORMAL

1. DO STEPS #1 - #5 ABOVE, AND PRESS 'CANCEL'.
2. PRESS 'SELECT' AND THEN '- ARROW' BUTTON UNTIL
   DISPLAY: ACTION?
   SERVICE MODE
3. PRESS 'SELECT' AGAIN TO RESET TIMERS, AND IF
   DISPLAY: SERVICE MODE
   ALL NORMAL
4. PRESS 'SELECT' AGAIN TO CLEAR LATCHES, AND SEND ALL NORMAL, SKIP STEPS #5-#6.
5. HOWEVER, IF ALARMS ARE NOT CLEARED:
   DISPLAY: SERVICE MODE
   ALARMS PENDING/PRESENT
6. PRESS 'CANCEL', CORRECT PROBLEM AND REPEAT STEPS #2 THRU #5 UNTIL ALL NORMAL SENT.

TO CANCEL THE 'SILENCE ALARMS' MODE

1. PRESS 'SELECT' AND THEN '+ ARROW' BUTTON UNTIL
   DISPLAY: ACTION?
   CANCEL SILENCE
2. PRESS THE 'SELECT' BUTTON AGAIN

EXAMINE & SET BATTERY VOLTAGE NOMINAL VALUE

1. PRESS THE '+ ARROW' OR '- ARROW' BUTTON UNTIL THE DESIRED CHANNEL IS DISPLAYED.
   DISPLAY: PS-BA:
   13.83V NORMAL
2. VERIFY THE DISPLAYED READING WITH A DIGITAL VOLTMETER
3. PRESS THE 'SELECT' BUTTON, AND THE CRTU DISPLAY WILL SWITCH BETWEEN CURRENT/SAVED NOMINAL VOLTAGE VALUES.
   DISPLAY: NOMINAL ON #6? (CURRENT)
   13.83
   DISPLAY: SAVED NOMINAL 6 (STORED)
   12.69
4. PRESS THE 'SELECT' BUTTON AND THE CURRENT OR 'NOMINAL ON' VALUE WILL BE SAMPLED AND STORED AS THE 'SAVED NOMINAL' VALUE
5. VERIFY THE 'NOMINAL ON' AND 'SAVED NOMINAL' VALUES ARE EQUIVALENT, REPEAT STEPS #1 THRU #3 & PRESS THE 'CANCEL' BUTTON.

NEW SHEET
SIDNEY, ILLINOIS
TR 269A
M.P. 136.70
VILLA GROVE SUBDIVISION
D.O.T.#166 899J

1	11-15-06	INSTALL FLS/GATES & CONSTANT WARNING AT TR 269A M.P. 136.70 A.F.E. 59235 JJL / /CTC/RDD	MODIFICATION LEVEL				
			Q.A. LAST LEVEL CHK'D.	DJ			
			LAST LEVEL MOD. THIS TYP.	DJ			
			LAST LEVEL BY DESIGNER.	DR			
			CHANGED FROM TYP.? Y/N	Y			

UNION PACIFIC QUALITY PRODUCTIVITY SAFETY SIGNAL DESIGN

DES:	CTC
DIG:	CTC
CHK:	JJL
A.F.E.	59235
ID= 030113670.2AX	

UNION PACIFIC RAILROAD

81ST STREET, ILLINOIS TO VILLA GROVE, ILLINOIS
C.T.C. CIRCUITS

Office of AVP Engineering - Design Omaha, Nebraska

DATE	11-15-06
SHEET	2A
DWG	136.70

S-301

(REV.06.01.04) (CRTUCFG32-2BAT.3)

4-15-26-36

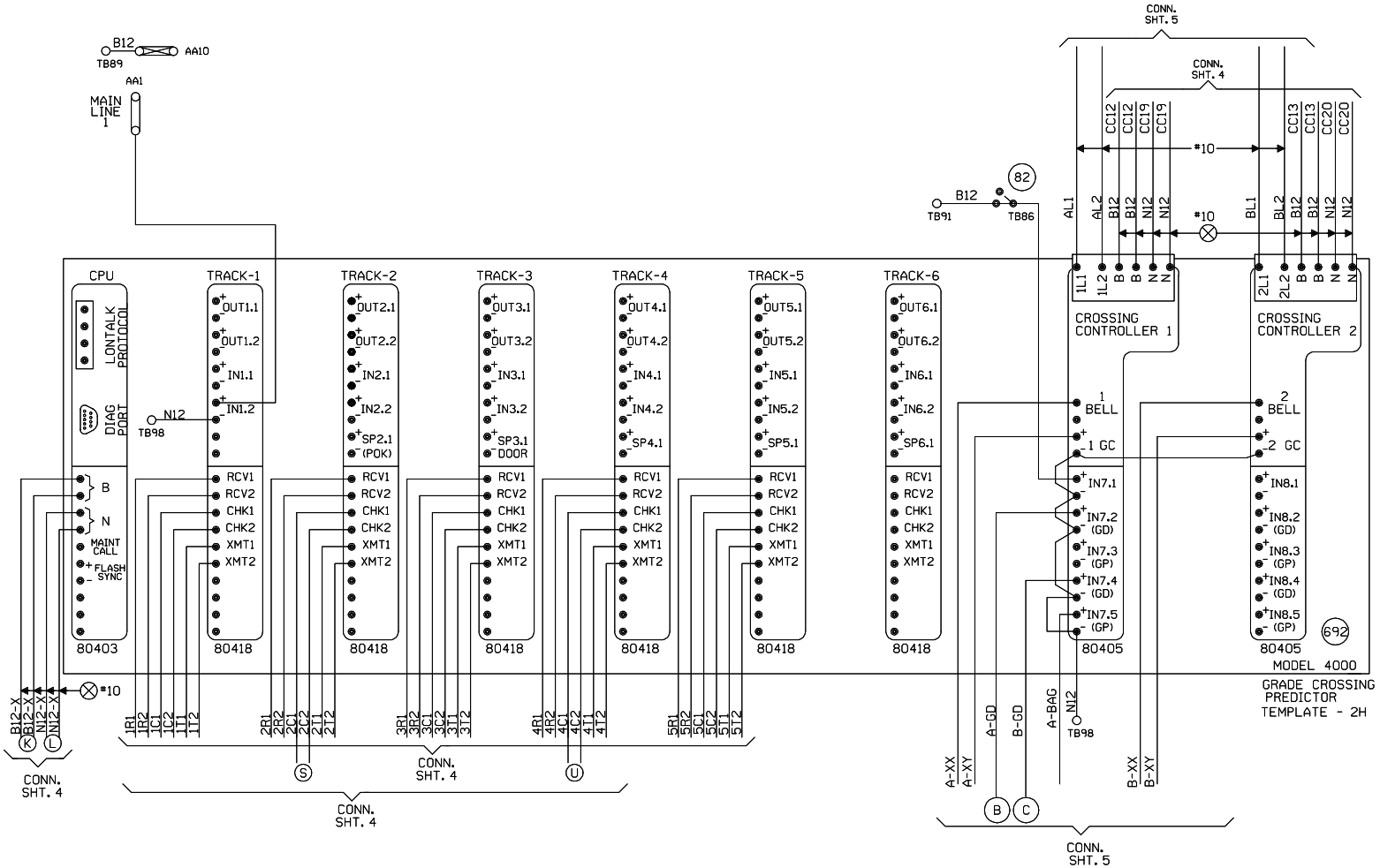

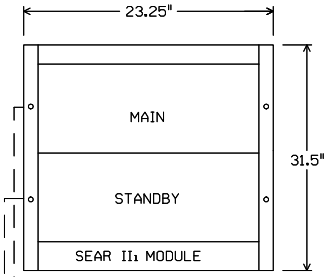

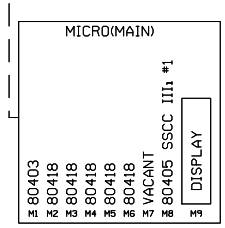

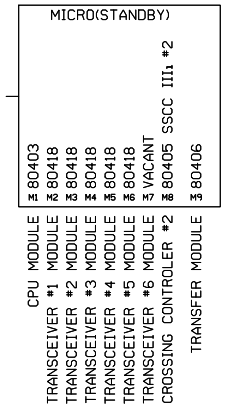

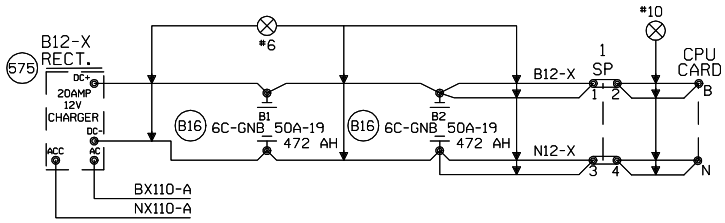

"Mf" FREQUENCY (HZ)	MAXIMUM TRANSMIT WIRE LENGTH (FEET)
86	100
114	125
156	150
211	200
285-970	250

NOTE:
EACH TRANSMITTER TO RAIL WIRE FROM XMT1 AND XMT2 MUST NOT EXCEED THE MAXIMUM LENGTH SPECIFIED IN THE TABLE SHOWN. THE RECEIVER WIRE LENGTH IS NOT CRITICAL. DOES NOT APPLY TO 6 TRACK WIRE APPLICATION.

NEW SHEET
SIDNEY, ILLINOIS
TR 269A
M.P. 136.70
VILLA GROVE SUBDIVISION
D.O.T.#166 899J

1 11-15-06 INSTALL FLS/GATES & CONSTANT WARNING AT TR 269A M.P. 136.70 A.F.E. 59235 JJL / /CTC/RDD	MODIFICATION LEVEL		UNION PACIFIC SIGNAL DESIGN	DES: CTC DIG: CTC CHK: JJL A.F.E. 59235 ID= 030113670.3X	UNION PACIFIC RAILROAD 81ST STREET, ILLINOIS TO VILLA GROVE, ILLINOIS C.T.C. CIRCUITS Office of AVP Engineering - Design Omaha, Nebraska
	Q. A. LAST LEVEL CHECKED	DP			
	LAST LEVEL MOD THIS TYPICAL	DP			
	LAST LEVEL BY DESIGNER	DP			
	CHANGED FROM TYPICAL?	Y			
	REV 02.26.07 4K 4TKB4GF.3				

DATE 11-15-06
SHEET 3
DWG 136.70
S-301