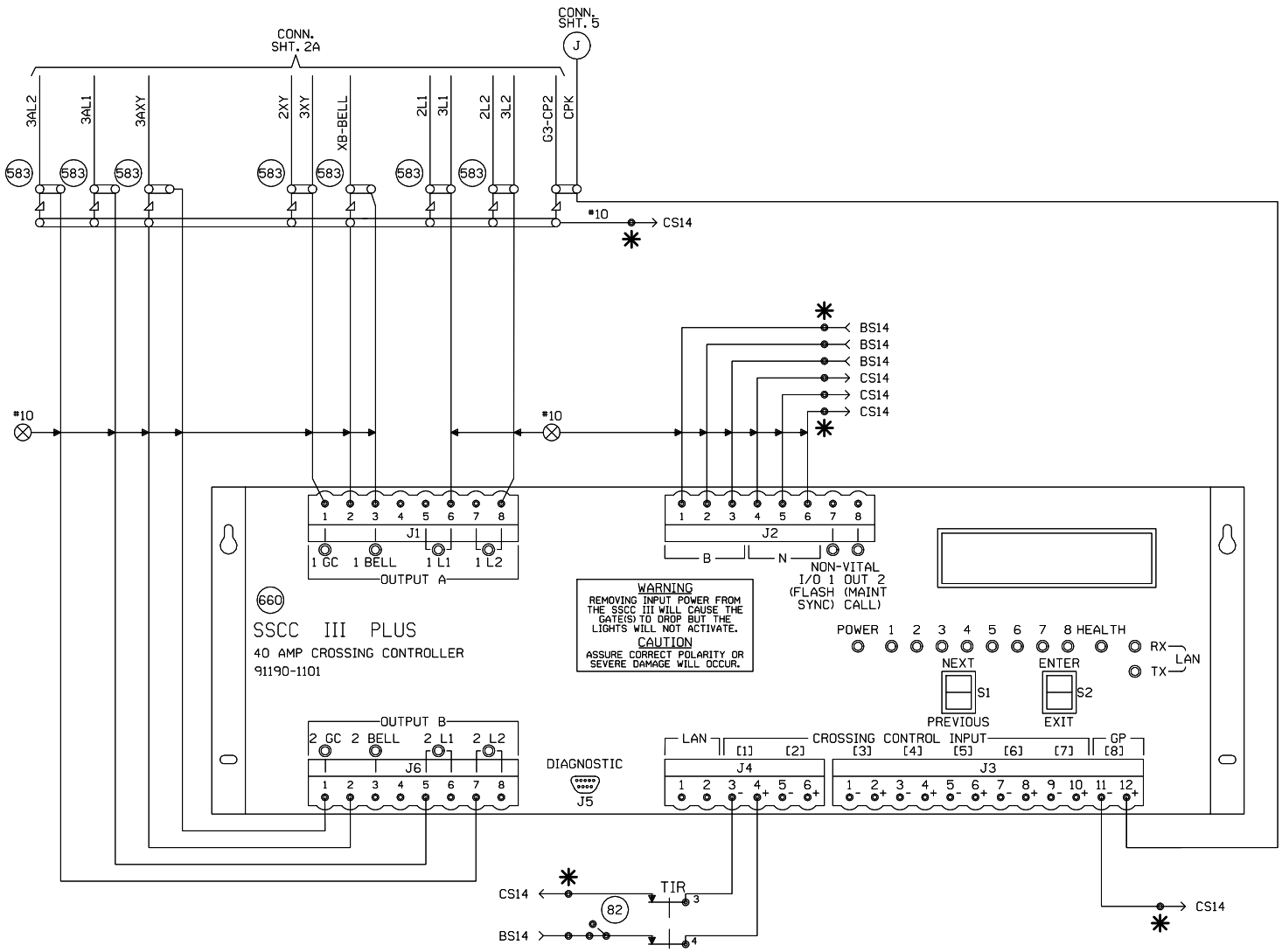

IMPORTANT
THE PROGRAM MCF AND ID LISTED BELOW MUST BE ENTERED IN THE PROGRAM SETUP ROUTINE FOR THIS SOLID STATE CROSSING CONTROLLER TO FUNCTION PROPERLY.
PROGRAM MCF: BASICPLS PROGRAM ID: 087

✱ = FIELD TO PROVIDE ALL BATTERY TERMINALS NUMBERS USED.

EXTERNAL CROSSING CONTROLLER PROGRAM NOTES:

#1) PROGRAM INPUT 2-7 TO DISABLED

NEW SHEET
CARY, ILLINOIS
THREE OAKS ROAD
M.P. 39.52
HARVARD SUBDIVISION
D.O.T.#176 965W

1	10-29-07	MODIFICATION LEVEL			
INSTALL NEW SSCC AT THREE OAKS ROAD M.P. 39.52 A.F.E. #85616		O. A. LAST LEVEL CHECKED	DQ		
		LAST LEVEL MOD THIS TYPICAL	DQ		
		LAST LEVEL BY DESIGNER	DQ		
CJB / /CTC/JJF		CHANGED FROM TYPICAL?	Y		
		REV 02.01.08 4K ACDCSSCC.5			

UNION PACIFIC — QUALITY PRODUCTIVITY SAFETY — SIGNAL DESIGN

DES:	CTC
DIG:	CTC
CHK:	CJB
A.F.E.	85616
ID: HAR3952.2X	

UNION PACIFIC RAILROAD
END OF SUBDIVISION, WISCONSIN
TO CHICAGO, ILLINOIS
A.T.S. CIRCUITS
Office of AVP Engineering - Design Omaha, Nebraska

DATE	10-29-07
SHEET	2
DWG	39.52
	HAR

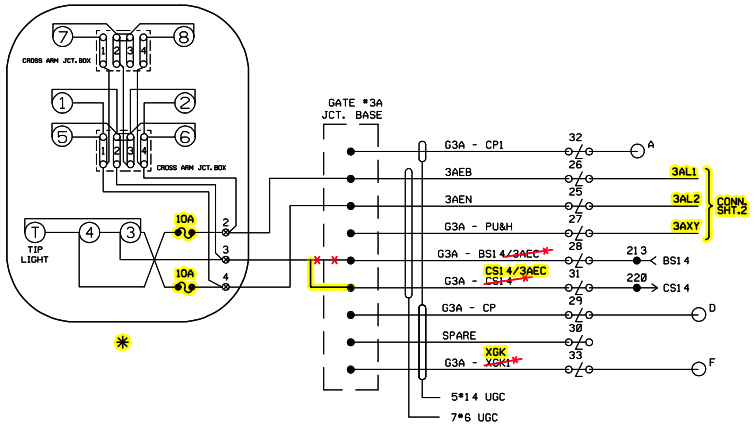

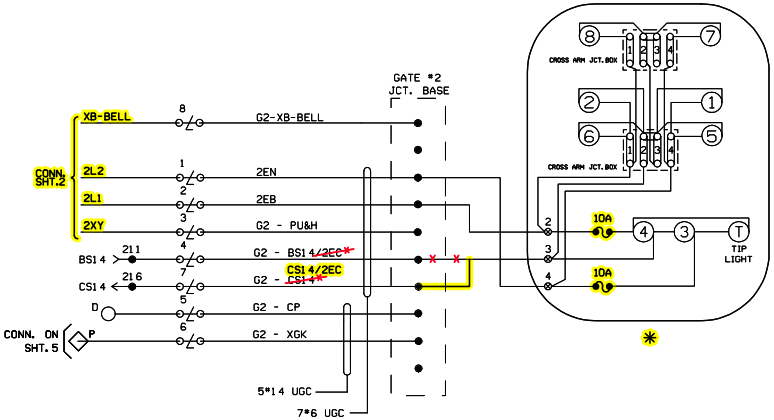

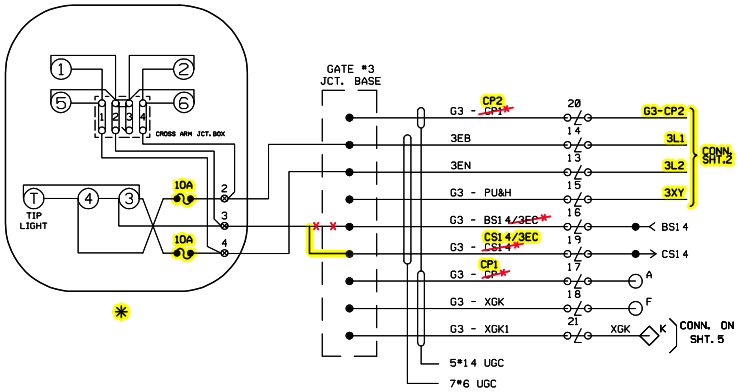

~ NOTES ~

1. USE #6 BOND STRAND BETWEEN SSCC III PLUS LAMP BATTERY + AND - AND BS14/CS14 BATTERY BUS.
2. USE #10 STRANDED WIRE BETWEEN SSCC III PLUS AND ARRESTORS.
3. CP AND XGK STARTS IN GATE 2 FROM BS14.

NOTE:
FIELD PROVIDE GATE MECHANISMS UPON AC.

* = FIELD VERIFY LIGHTING CIRCUITS AS SHOWN AND "AC" PLAN ACCORDINGLY.

= EXISTING, REVISE ORIGINAL IF A.C.'d

= IN

= OUT

CTC/SDB

REVISIONS

DESIGNED BY: HAR
DATE: 7-14-95
AFE: 86714

REV. 2-28-96
INSTALL ECU FROM FOX RIVER GROVE TO CRYSTAL LAKE & UPGARDE XINGS
KRB/HAR/HAR

REV. 10-26-00
INCREASED W.T. AT THREE OAKS ROAD, INSTALLED HXP-3R'S.
8-1-00 JJF
JLK/WITT/HAR/JNM

3 REV. 11-27-01
CHANGED CONTROL BATT NAME PER AC
10-2-01
LPS/NST

4 10-29-07
INSTALL NEW SSCC AT THREE OAKS ROAD M.P. 39.52 A.F.E. #85616
CJB
/CTC/JJF

UNION PACIFIC
QUALITY PRODUCTIVITY SAFETY
SIGNAL DESIGN

CARY, IL.
THREE OAKS ROAD (TR 225)
M.P. 39.52

HAR03952.2A

SYSTEM$TIME$$$$$$

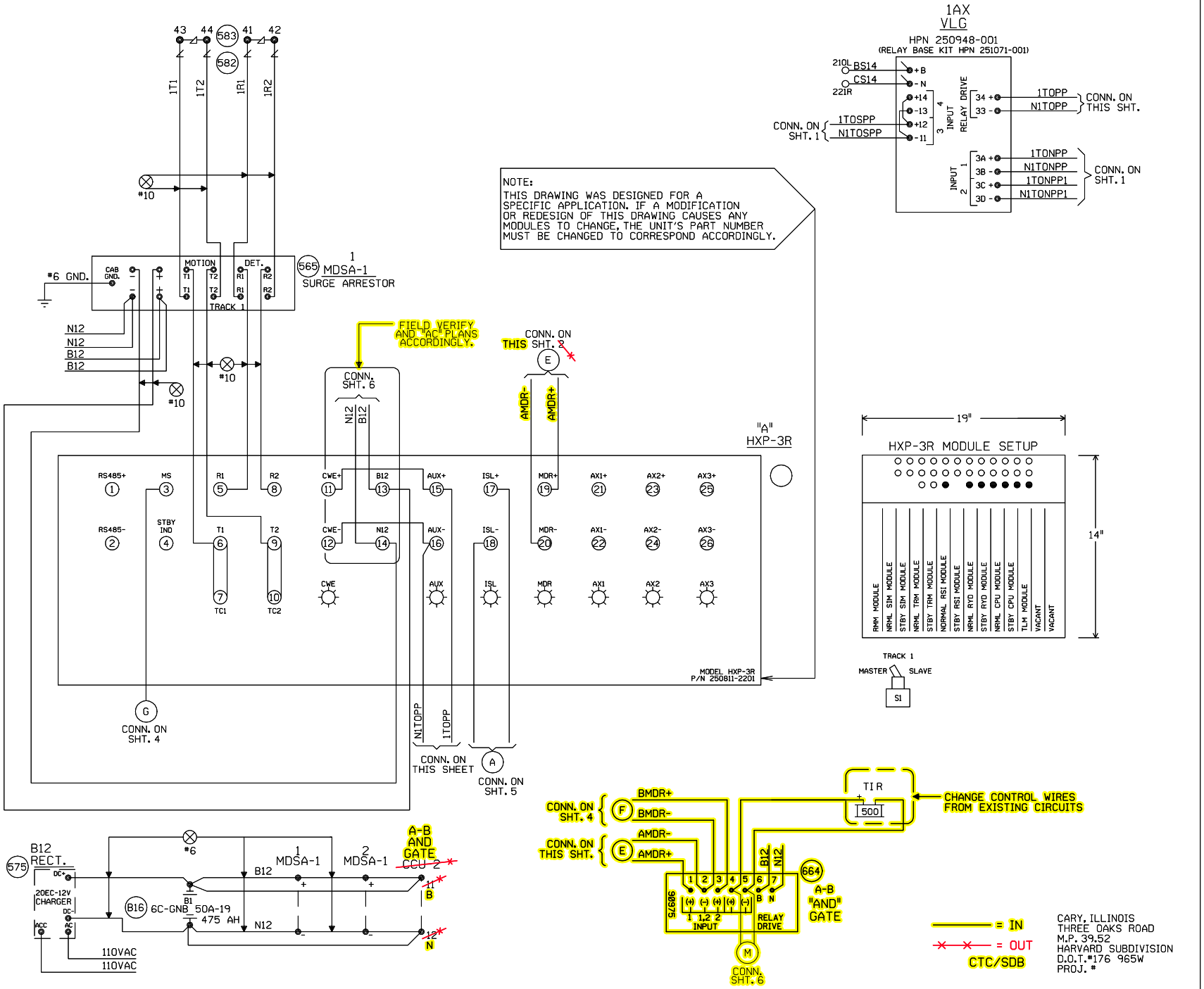

3 10-29-07 INSTALL NEW SSCC AT THREE OAKS ROAD M.P. 39.52 A.F.E. #85616 CJB /CTC/JJF	2 REV. 11-27-01 CHANGED CONTROL BATT NAME PER AC 10-2-01 LPS/NST	REV. 10-26-00 INCREASED W.T. AT THREE OAKS ROAD, INSTALLED HXP-3R'S. W.O. #34086 8-1-00 JJF JLK/WITT/HAR/JNM	

MODIFICATION LEVEL	
Q.A. LAST LEVEL CHK'D.	CQ
LAST LEVEL MOD. THIS TYP.	CK
LAST LEVEL BY DESIGNER.	CR
CHANGED FROM TYP.? Y/N	Y

UNION PACIFIC
QUALITY PRODUCTIVITY SAFETY
SIGNAL DESIGN

DES: HARMON
DIG: HARMON
CHK: JJF
A.F.E. 34086
ID= HAR03952.3

UNION PACIFIC RAILROAD
END OF SUBDIVISION, WISCONSIN
TO CHICAGO, ILLINOIS
A.T.S. CIRCUITS
OFFICE OF CHIEF ENG'R OMAHA NEBR.

DATE 08-11-99
SHEET 3
DWG 39.52
HAR

(REV. 6-1-98) (CIRCUIT.TYP)

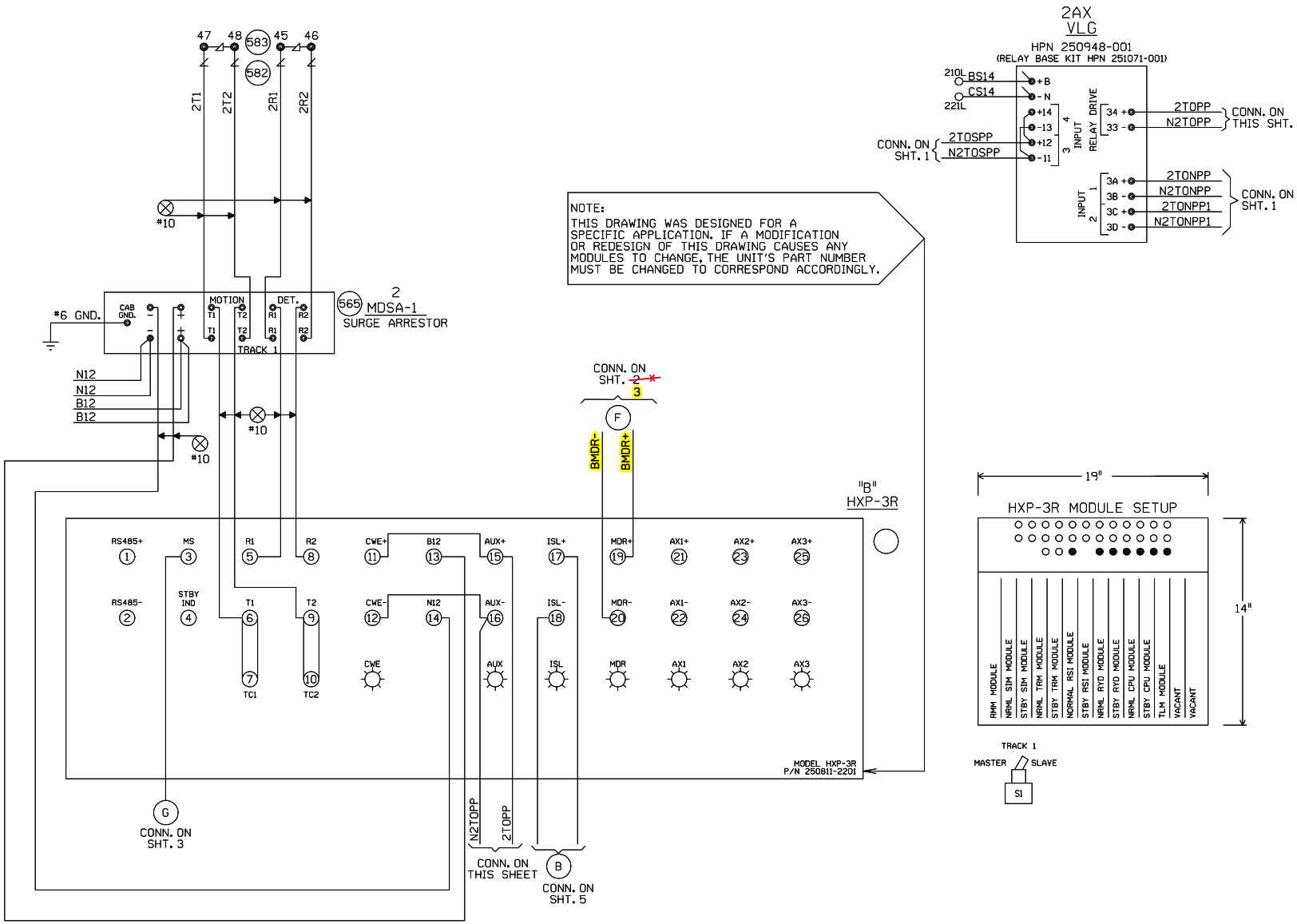

= IN
= OUT
CTC/SDB

CARY, ILLINOIS
THREE OAKS ROAD
M.P. 39.52
HARVARD SUBDIVISION
D.O.T.#176 965W
PROJ. #

3 10-29-07 INSTALL NEW SSCC AT THREE OAKS ROAD M.P. 39.52 A.F.E. #85616 CJB / /CTC/JJF	2 REV. 11-27-01 CHANGED CONTROL BATT NAME PER AC 10-2-01 LPS/NST	REV. 10-26-00 INCREASED W.T. AT THREE OAKS ROAD, INSTALLED HXP-3R'S. W.O. #34086 8-1-00 JJF JLK/WITT/HAR/JNM	MODIFICATION LEVEL		UNION PACIFIC QUALITY PRODUCTIVITY SAFETY SIGNAL DESIGN	DES: HARMON DIG: HARMON CHK: JJF A.F.E. 34086 ID= HAR03952.4	UNION PACIFIC RAILROAD END OF SUBDIVISION, WISCONSIN TO CHICAGO, ILLINOIS A.T.S. CIRCUITS OFFICE OF CHIEF ENG'R OMAHA NEBR.	DATE 08-11-99 SHEET 4 DWG 39.52 HAR
			Q.A. LAST LEVEL CHK'D.	CQ				
			LAST LEVEL MOD. THIS TYP.	CK				
			LAST LEVEL BY DESIGNER.	CR				
			CHANGED FROM TYP.? Y/N	Y				

(REV. 6-1-98) (CIRCUIT.TYP)

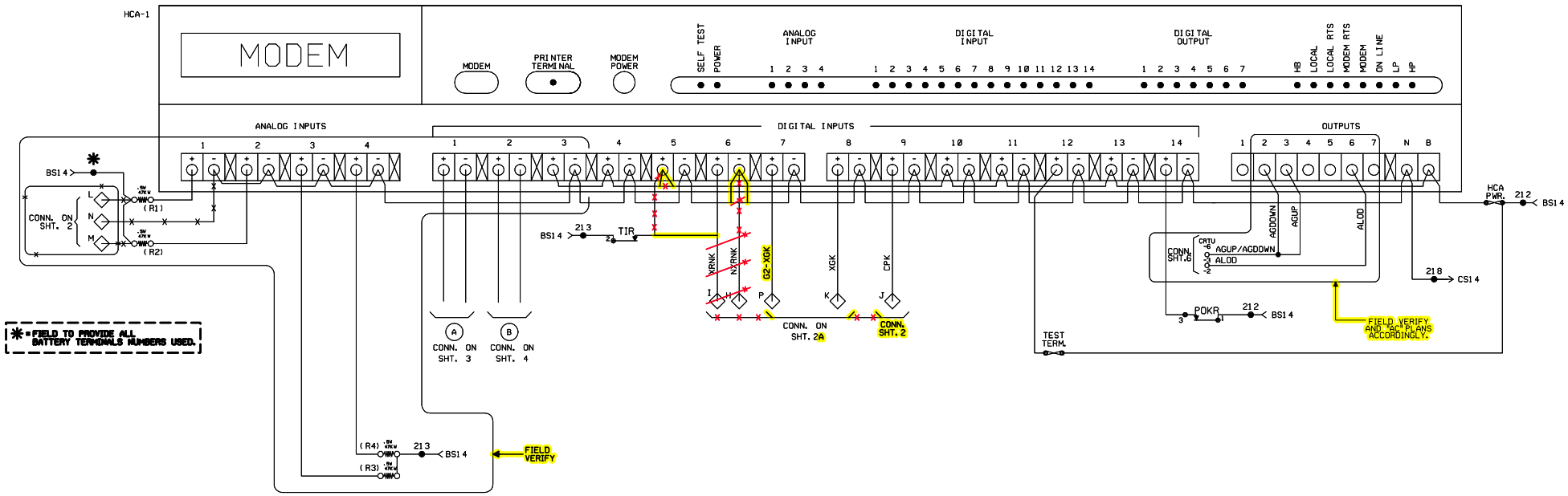

~NOTES~

1. USE SURGE PROTECTION ON PHONE LINES.

WIRING REQUIREMENTS

HCA CONNECTIONS	#16 AWG ANALOG #16 AWG DIGITAL

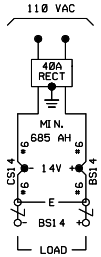

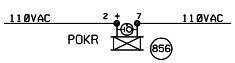

HCA NOTES:

1. CPU BOARD REV LEVEL "F" OR HIGHER.
2. SOFTWARE REV LEVEL "UP1-NC" OR GREATER ON IC13.
3. DIP SWITCH #1: ON, ON, ON, OFF, ON, ON, OFF, OFF.
4. DIP SWITCH #2: OFF, OFF, OFF, OFF, OFF, OFF, OFF, OFF.
5. JUMPER ALL UNUSED DIGITAL "+" INPUTS TO THE B TERMINAL.
6. JUMPER ALL UNUSED DIGITAL "-" INPUTS TO THE N TERMINAL.
7. THE ANALOG AND DIGITAL INPUT ASSIGNMENT MUST BE MARKED ON THE HCA SHEET.
8. DO NOT JUMPER INPUTS WITH DIFFERENT VOLTAGE REFERENCES TOGETHER.
9. REFER TO "FIELD INSTRUCTIONS FOR INSTALLATION AND OPERATION OF HIGHWAY CROSSING ANALYZERS" FOR EQUIPMENT SETUP.

5ISLDTI

ANALOG #1: 1 _LOD
ANALOG #2: 2 _LOD
ANALOG #3: 3 _LOD
ANALOG #4: 4 _LOD

DIGITAL #1: ISLAND - 1
DIGITAL #2: ISLAND - 2
DIGITAL #3: ISLAND - 3
DIGITAL #4: ISLAND - 4
DIGITAL #5: ISLAND - 5
DIGITAL #6: XR
DIGITAL #7: GATE DOWN A
DIGITAL #8: GATE DOWN B
DIGITAL #9: GP
DIGITAL #10: ISLAND ONLY
DIGITAL #11: FOREIGN XR
DIGITAL #12: TEST
DIGITAL #13: TROUBLE
DIGITAL #14: POR

REVISIONS

DESIGNED BY: HAR
DATE: 7-14-95
AFE: 86714

REV.		
	2-28-96	INSTALL ECU FROM FOX RIVER GROVE TO CRYSTAL LAKE & UPGARDE XINGS KRB/HAR/HAR
REV.	10-26-00	INCREASED W.T. AT THREE OAKS ROAD, INSTALLED HXP-3R'S. 8-1-00 JJF JLK/WITT/HAR/JNM
3	10-29-07	INSTALL NEW SSCC AT THREE OAKS ROAD MP 39.52 A.F.E. #95616 / /CTC/JJF CJB

= EXISTING, REVISE ORIGINAL IF A.C.'d

= IN

= OUT

CTC/SDB

UNION PACIFIC

QUALITY PRODUCTIVITY SAFETY

SIGNAL DESIGN

CARY, IL.
THREE OAKS ROAD (TR 225)
M.P. 39.52

HAR03952.5

SYSTEM@TIME@@@@@@

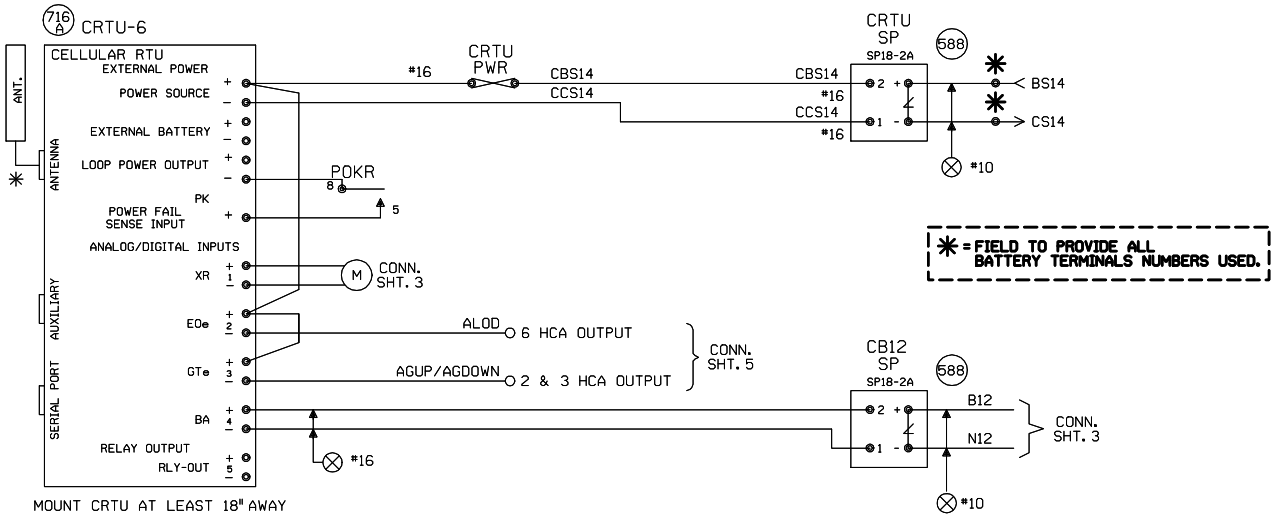

MOUNT CRTU AT LEAST 18" AWAY FROM HIGH VOLTAGE POWER SOURCES

FIELD TO VERIFY ALL CRTU CIRCUITS AS SHOWN AND "AC" PLANS ACCORDINGLY.

NOTES:

ALL DIODES 1N5060 OR 1N4004 UNLESS OTHERWISE NOTED.

✱ MOUNT ANTENNA ON TOP OF HOUSE.
INSTALL ANTENNA CABLE AND CHOKE PER TECH BULLENTIN #99-0015-00

ALL WIRES #18 UNLESS OTHERWISE NOTED.

ALL UNUSED 'NC' INPUTS MUST BE TIED HIGH TO BATTERY

ALL UNUSED ANALOG INPUTS MUST BE TIED HIGH TO BATTERY

ALL UNUSED 'NO' INPUTS MUST BE DISCONNECTED

NORMAL STATE FOR ANALOG CHANNELS IS EQUAL TO THE STORED NOMINAL VOLTAGE +120% OR -81%

CRTU FRONT PANEL DISPLAY CHART INDICATES NORMAL STATE

■ DIGITAL INPUT HIGH, OR POWER FAIL INPUT CLOSED
□ DIGITAL INPUT LOW, OR POWER FAIL INPUT OPEN

■ L — LATCH IS SET BECAUSE CRTU DETECTED AN ALARM CONDITION
12.06V L

'sRUN MODE' — 'sRUN MODE-SILENT' — CRTU RADIO IS DISABLED. REPROGRAM CRTU WITH LAPTOP.

ANALOG AND AC INPUT MODULES AND SURGE PROTECTORS MUST BE MOUNTED LESS THAN 18" FROM CRTU

ANALOG MODULES CONVERT DC VOLTAGE TO A SQUARE WAVE. A WORKING ANALOG MODULE WILL HAVE 4.5VDC TO 8.0VDC BETWEEN 5VOUT+ AND 6VOUT-. WHERE, 0VOLTS = 0HZ OUT, 30VOLTS = 10KHZ OUT, AND 15VOLTS = 5KHZ OUT
MAKE SURE CRTU IS PROGRAMMED WITH CALIBRATION SETTINGS.

CRTU CH4 CAN BE CONNECTED TO EITHER SP18 OR EQUIPMENT SIDE OF MDSA1, TAB 565

UNIT INSTALLATION AND SETUP

R.R. SITE ID WHERE; SSSS = 4 CHARACTER SUBDIVISION ID. FILL WITH PRECEDING ZEROS AS REQUIRED. THE MAIN TRACK SUBDIVISION ID* IS IN THE CURRENT TIMETABLE. INDUSTRIAL LEADS, LEASED, AND LEAD TRACKS LISTED WITHIN THE SUBDIVISION MAY HAVE THEIR OWN UNIQUE SUBDIVISION ID*. ALWAYS REFER TO CURRENT PRINTED COPY OF THE TIMETABLE.
LLLLLLLL = 8 CHARACTERS USE DOT* AT CROSSINGS, AND
WDLLLLLL = USE 'WD' THEN MP* AT WAYSIDE LOCATIONS.
EXAMPLE = 0785WD1801.5UT
HBLLLLLL = USE 'HB' THEN MP* AT HBD SITES.
EXAMPLE = 0100-HB55.62TX
THE MP* MUST USE A DECIMAL POINT TO SEPARATE NUMBERS.
FILL WITH PRECEDING DASHES AS REQUIRED.
AA = 2 CHARACTER STATE NAME FOR ALL LOCATIONS.
MUST BE 14 CHARACTERS LONG, NO SPACES ALLOWED.

SITE IDENTIFIER: SSSSLLLLLLLLAA	0163-176965WIL
OPERATION TO RESUME:	RUN
SIGNAL STRENGTH dBm	
CARRIER ID	
FIRMWARE VERSION	2.3.
SERIAL NUMBER	
BOOT VERSION:	
CMM VERSION:	
MIN ASSIGNMENT	
ESN: (MICROBURST ONLY)	
CONFIGURATION NET	
SILENCE INTERVAL	60 MINUTES
HEALTHCHECK INTERVAL	EVERY 2 DAYS
ALARM DEFER DELAY	240 MINUTES (4 HOURS)
SIGNAL STATUS	
SCADANET STATUS	
CALIBRATION CONSTANT CH1	
CALIBRATION CONSTANT CH2	
CALIBRATION CONSTANT CH3	
CALIBRATION CONSTANT CH4	
CALIBRATION CONSTANT PS	

FIELD PROVIDES: SAMPLED NOMINAL VOLTAGES, SCADANET STATUS CALIBRATION CONSTANTS, SERIAL NUMBER, AND SIGNAL STATUS.

CHANNEL SETUP - STANDARD CONFIGURATION 32:XR,EOe,GTe,Ba

CHANNEL NORMAL STATE	SENSE (NO/NC)	NAME FUNCTION	RECOGNITION DELAY SECONDS ACTIVE	RECOGNITION DELAY SECONDS NORMAL	RETURN TO NORMAL	REPORTING MODE	ALARM LINKED CHANNEL	ALARM LINKED CRITERIA	EVENT LOGGING ENABLED OPTIONS
POWER FAIL (CH5) ■	POWER FAIL DETECT NO	PFin-PK AC POWER FAIL	7,200 ALARM	300 NORMAL	ENABLED	ALERT	DISABLED	N/A	
CH1 ■	DIGITAL INPUT NC	CH1-XR XR DOWN TO LONG	1,800 ALARM	1 NORMAL	ENABLED	ALERT	DISABLED	N/A	ANALOG VALUE SENT
CH2 □	DIGITAL INPUT NO	CH2-EOe LIGHT OUT	120 ALARM	10 NORMAL	ENABLED	ALERT	DISABLED	N/A	
CH3 □	DIGITAL INPUT NO	CH3-GTe GATES NOT UP/DOWN	120 ALARM	10 NORMAL	ENABLED	ALERT	DISABLED	N/A	DIGITAL EVENTS
CH4 STORED NOMINAL VOLTAGE	ANALOG INPUT N/A	CH4-Ba/V BATTERY MONITOR BATTERY LOW	600 ALARM	1200 NORMAL	ENABLED	ALERT W/UPDATE	DISABLED	N/A	PFin-PK CH1-XR CH2-EOe CH3-GTe
POWER SOURCE (CH6)	ANALOG INPUT N/A	PS-Ba/V BATTERY MONITOR BATTERY LOW	600 ALARM	1200 NORMAL	ENABLED	ALERT W/UPDATE	DISABLED	N/A	

ANALOG CHANNEL	USEFUL RANGE VOLTS LOW	USEFUL RANGE VOLTS HIGH	DISPLAYED RANGE VOLTS LOW	DISPLAYED RANGE VOLTS HIGH	RELATIVE ALARM POINT LOW	RELATIVE ALARM POINT HIGH	ABSOLUTE ALARM POINT LOW	ABSOLUTE ALARM POINT HIGH	AUTOMATIC UPDATE INTERVAL	STORED NOMINAL VOLTAGE	SAMPLED NOMINAL VOLTAGE
CH4	0.0	30.00	0.0	30.00	81%	120%	10.0	29.0	14 DAYS	12.69	
POWER SOURCE	0.0	30.00	0.0	30.00	81%	120%	10.0	29.0	14 DAYS	12.69	
RELAY OUTPUT	NAME RLY-OUT		ACTIVE SET-UP-OPEN		NORMAL CLR-DN-CLOSE		PULSE DURATION		15 SECONDS	StdCfg Ver: 2.3.3 REV'D 9-20-02	

MAINTENANCE OPERATIONS

TO START OR ABORT ANY PROCEDURE

1. PRESS THE 'CANCEL' BUTTON FIRST

WHEN RESPONDING TO A CALL, PUT THE CRTU IN THE 'SILENCE ALARMS' MODE

1. PRESS 'SELECT' AND THEN '+ ARROW' BUTTON UNTIL
   DISPLAY: ACTION?
   SILENCE ALARMS
2. PRESS THE 'SELECT' BUTTON TWICE
3. CORRECT PROBLEM AND SIMULATE NORMAL TRAIN MOVEMENT THROUGH THE LOCATION
4. EXAMINE EACH CHANNEL ON THE CRTU
5. PRESS THE '+/- ARROW' BUTTON
   VERIFY ALL CHANNELS INDICATE A NORMAL STATE
   NORMAL STATES ARE ON THE CHANNEL SETUP CHART

CLEAR TIMERS, LATCHES AND SEND ALL NORMAL

1. DO STEPS #1 - #5 ABOVE, AND PRESS 'CANCEL'.
2. PRESS 'SELECT' AND THEN '- ARROW' BUTTON UNTIL
   DISPLAY: ACTION?
   SERVICE MODE
3. PRESS 'SELECT' AGAIN TO RESET TIMERS, AND IF
   DISPLAY: SERVICE MODE
   ALL NORMAL
4. PRESS 'SELECT' AGAIN TO CLEAR LATCHES, AND SEND ALL NORMAL. SKIP STEPS #5-#6.
5. HOWEVER, IF ALARMS ARE NOT CLEARED;
   DISPLAY: SERVICE MODE
   ALARMS PENDING/PRESENT
6. PRESS 'CANCEL', CORRECT PROBLEM AND REPEAT STEPS #2 THRU #5 UNTIL ALL NORMAL SENT.

TO CANCEL THE 'SILENCE ALARMS' MODE

1. PRESS 'SELECT' AND THEN '+ ARROW' BUTTON UNTIL
   DISPLAY: ACTION?
   CANCEL SILENCE
2. PRESS THE 'SELECT' BUTTON AGAIN

EXAMINE & SET BATTERY VOLTAGE NOMINAL VALUE

1. PRESS THE '+ ARROW' OR '- ARROW' BUTTON UNTIL THE DESIRED CHANNEL IS DISPLAYED.
   DISPLAY: PS-BA:
   13.83V NORMAL
2. VERIFY THE DISPLAYED READING WITH A DIGITAL VOLTMETER
3. PRESS THE 'SELECT' BUTTON, AND THE CRTU DISPLAY WILL SWITCH BETWEEN CURRENT/SAVED NOMINAL VOLTAGE VALUES.
   DISPLAY: NOMINAL ON #6? (CURRENT)
   13.83
   DISPLAY: SAVED NOMINAL 6 (STORED)
   12.69
4. PRESS THE 'SELECT' BUTTON AND THE CURRENT OR 'NOMINAL ON' VALUE WILL BE SAMPLED AND STORED AS THE 'SAVED NOMINAL' VALUE
5. VERIFY THE 'NOMINAL ON' AND 'SAVED NOMINAL' VALUES ARE EQUIVALENT, REPEAT STEPS #1 THRU #3 & PRESS THE 'CANCEL' BUTTON.

= IN
= OUT
CTC/SDB

REDRAWN

1	10-29-07	INSTALL NEW SSCC AT THREE OAKS ROAD M.P. 39.52 A.F.E. #85616 CJB / /CTC/JJF

MODIFICATION LEVEL	
Q.A. LAST LEVEL CHK'D.	DG
LAST LEVEL MOD. THIS TYP.	DG
LAST LEVEL BY DESIGNER.	DS
CHANGED FROM TYP.? Y/N	Y

UNION PACIFIC QUALITY PRODUCTIVITY SAFETY SIGNAL DESIGN

Date: 10/29/07
Des: CTC
Chk: CJB
AFE: 85616

UNION PACIFIC RAILROAD
CARY, ILLINOIS
THREE OAKS ROAD
HARVARD SUBDIVISION
Office of Sr AVP Engineering - Signal/TCO Omaha, Nebraska

Sh.: 6
DOT 176965W
MP: 39.52
ID: HAR3952.6X

(REV.03.06.01) (CRTUCFG32-2BAT.3X)

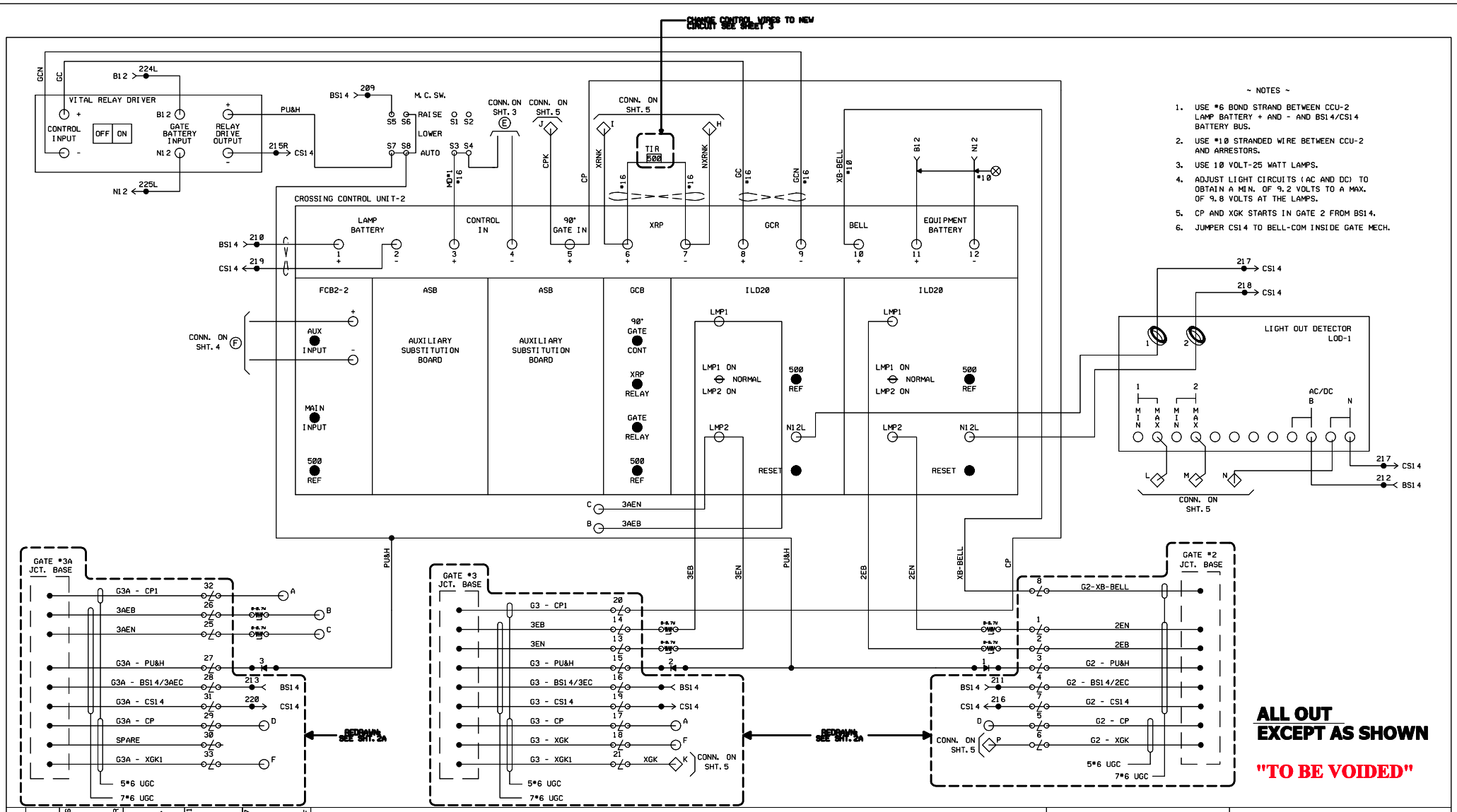

REVISIONS

DESIGNED BY: HAR DATE: 7-14-95 AFE: 06714	
REV. 2-28-96 INSTALL ECU FROM FOX RIVER GROVE TO CRYSTAL LAKE & UPGRADE XINGS KRB/HAR/HAR	
REV. 10-26-00 INCREASED W.T. AT THREE OAKS ROAD, INSTALLED HXP-3R'S, 8-1-00 JLK/WTT/HAR/JNM	
3 REV. 11-27-01 CHANGED CONTROL BATT NAME PER AC JJF	
10-2-01 LPS/NST	10-29-07
5	M.P. 39.52 A.F.E. #85616 / /CTC/JJF

UNION PACIFIC
QUALITY PRODUCTIVITY SAFETY
SIGNAL DESIGN

CARY, IL.
THREE OAKS ROAD (TR 225)
M.P. 39.52

HAR03952.2

SYSTEM@TIME&&&&&&

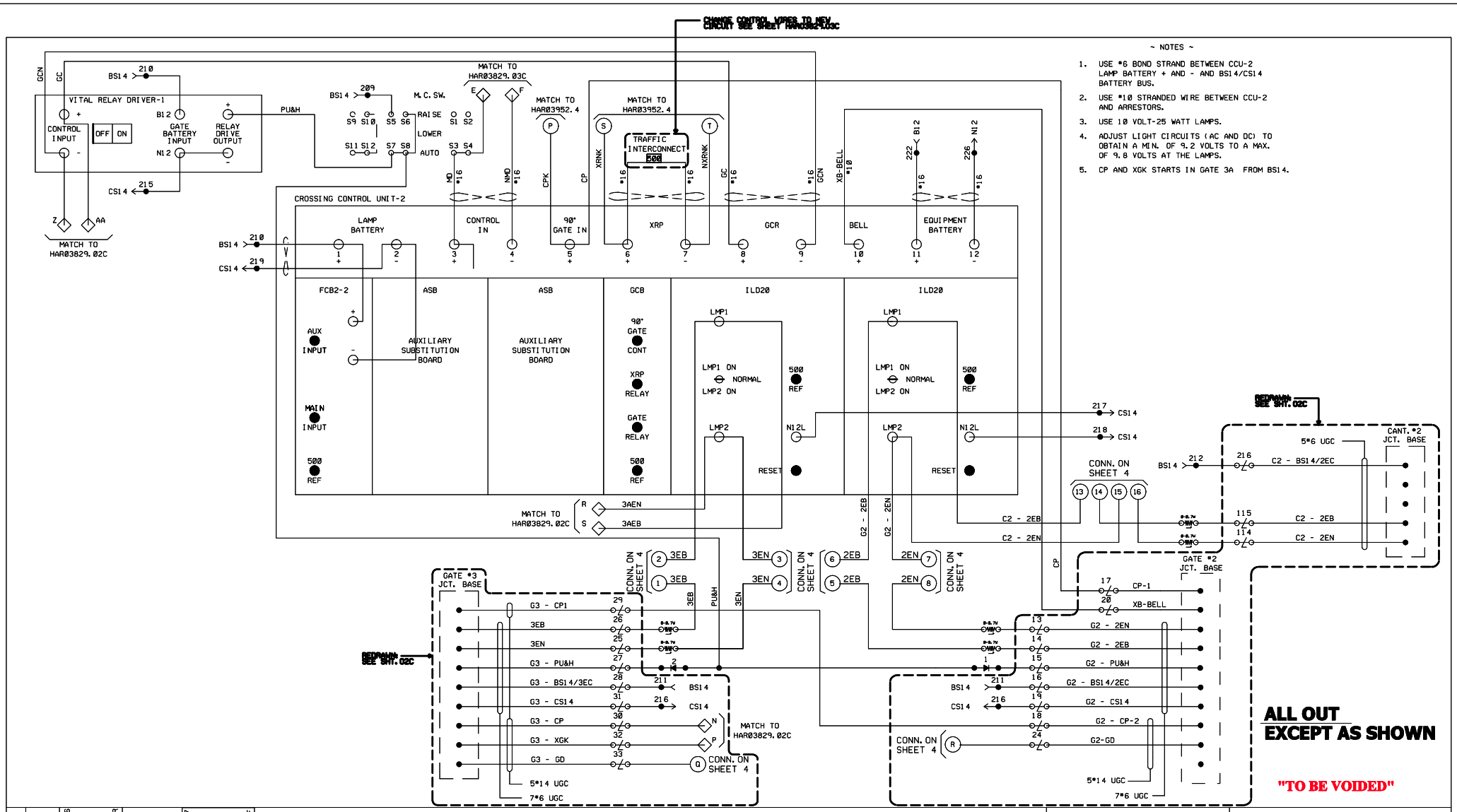
CHANGE CONTROL WIRES TO NEW CIRCUIT SEE SHEET HAR03829.03C
~ NOTES ~
1. USE #6 BOND STRAND BETWEEN CCU-2 LAMP BATTERY + AND - AND BS14/CS14 BATTERY BUS.
2. USE #10 STRANDED WIRE BETWEEN CCU-2 AND ARRESTORS.
3. USE 10 VOLT-25 WATT LAMPS.
4. ADJUST LIGHT CIRCUITS (AC AND DC) TO OBTAIN A MIN. OF 9.2 VOLTS TO A MAX. OF 9.8 VOLTS AT THE LAMPS.
5. CP AND XGK STARTS IN GATE 3A FROM BS14.
VITAL RELAY DRIVER-1
CONTROL INPUT
OFF ON
GATE BATTERY INPUT
RELAY DRIVE OUTPUT
MATCH TO HAR03829.02C
MATCH TO HAR03829.03C
MATCH TO HAR03952.4
M.C.SW.
RAISE
LOWER
AUTO
TRAFFIC INTERCONNECT
CROSSING CONTROL UNIT-2
LAMP BATTERY
CONTROL IN
90° GATE IN
XRP
GCR
BELL
EQUIPMENT BATTERY
FCB2-2
ASB
GCB
ILD20
AUX INPUT
MAIN INPUT
AUXILIARY SUBSTITUTION BOARD
90° GATE CONT
XRP RELAY
GATE RELAY
LMP1 ON
NORMAL
LMP2 ON
RESET
CONN. ON SHEET 4
GATE #3 JCT. BASE
GATE #2 JCT. BASE
CANT. #2 JCT. BASE
REDRAWN SEE SHT. 02C
5*14 UGC
7*6 UGC
5*6 UGC
ALL OUT
EXCEPT AS SHOWN
"TO BE VOIDED"
REVISIONS
DESIGNED BY: HAR
DATE: 7-14-95
AFE: 08714
REV. 2-28-96 INSTALL ECU FROM FOX RIVER GROVE TO CRYSTAL LAKE & UPGRADE XINGS KRB/HAR/HAR
REV. 10-26-00 UPGRADED HCA TO 51SLHCA96 PROGRAM 6-30-00 RCP SJZ/WITT/WITT/JNM
10-29-07
M.P. 38.29
A.F.E. 485616
/CTC/JJF
UNION PACIFIC
QUALITY PRODUCTIVITY SAFETY
SIGNAL DESIGN
CARY, IL.
MAIN ST.
M.P. 38.29
HAR03829.01C
SYSTEM@TIME@@@@@@