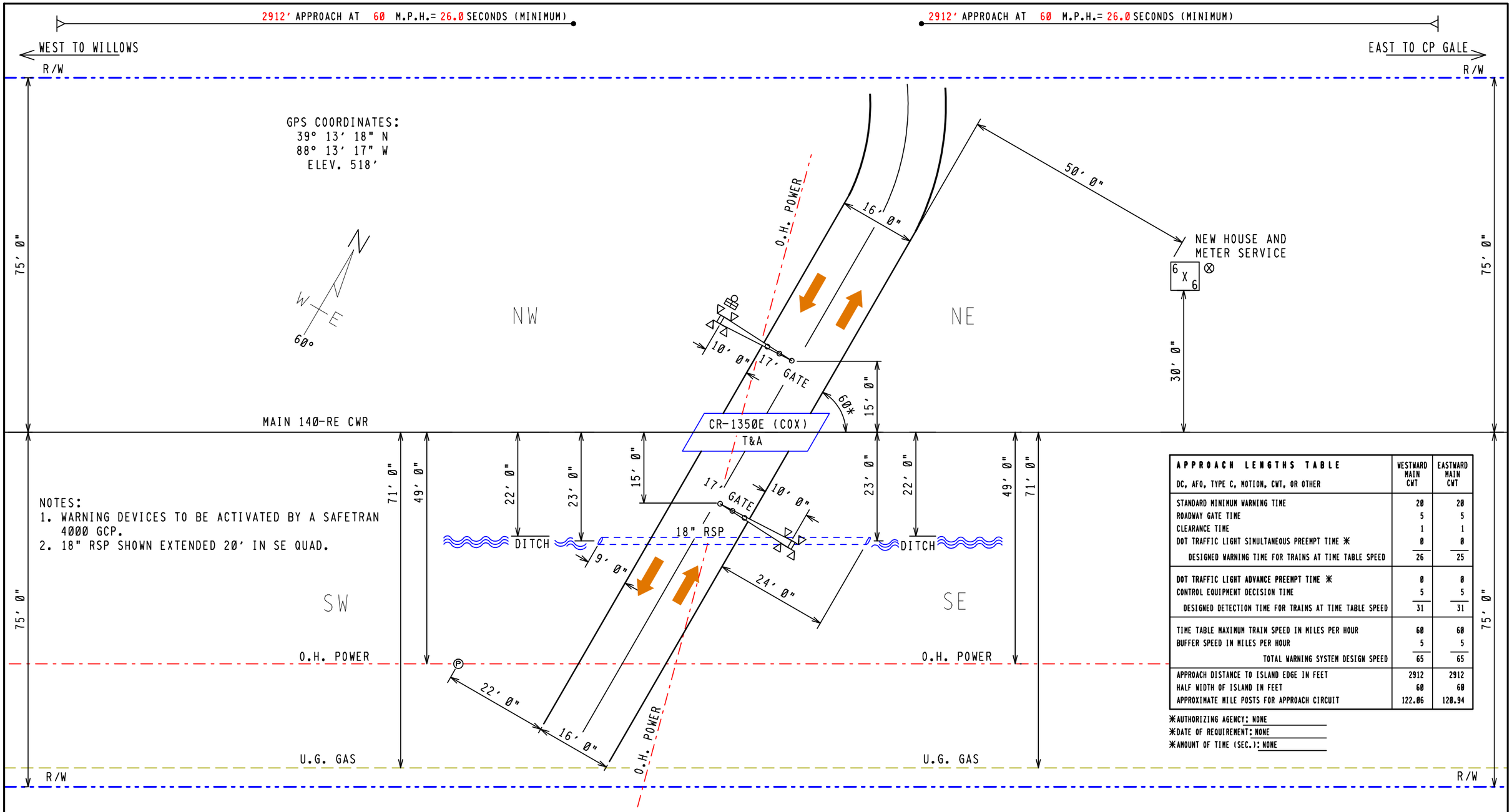

NOTES:
1. WARNING DEVICES TO BE ACTIVATED BY A SAFETRAN 4000 GCP.
2. 18" RSP SHOWN EXTENDED 20' IN SE QUAD.

APPROACH LENGTHS TABLE DC, AFO, TYPE C, MOTION, CWT, OR OTHER	WESTWARD MAIN CWT	EASTWARD MAIN CWT
STANDARD MINIMUM WARNING TIME	20	20
ROADWAY GATE TIME	5	5
CLEARANCE TIME	1	1
DOT TRAFFIC LIGHT SIMULTANEOUS PREEMPT TIME *	0	0
DESIGNED WARNING TIME FOR TRAINS AT TIME TABLE SPEED	26	25
DOT TRAFFIC LIGHT ADVANCE PREEMPT TIME *	0	0
CONTROL EQUIPMENT DECISION TIME	5	5
DESIGNED DETECTION TIME FOR TRAINS AT TIME TABLE SPEED	31	31
TIME TABLE MAXIMUM TRAIN SPEED IN MILES PER HOUR	60	60
BUFFER SPEED IN MILES PER HOUR	5	5
TOTAL WARNING SYSTEM DESIGN SPEED	65	65
APPROACH DISTANCE TO ISLAND EDGE IN FEET	2912	2912
HALF WIDTH OF ISLAND IN FEET	60	60
APPROXIMATE MILE POSTS FOR APPROACH CIRCUIT	122.06	120.94

*AUTHORIZING AGENCY: NONE
*DATE OF REQUIREMENT: NONE
*AMOUNT OF TIME (SEC.): NONE

FILE NAME: QS12150.H01	REVISION DATES	PRODUCED FOR:	PRODUCED BY:	LEGEND	GUARD RAIL	METER SERVICE ⊗	STREET NAME: CR-1350E (COX)
DATE DRAWN: 06-17-2008	- -	CSX TRANSPORTATION	SAFETRAN systems	CSX ROW	O.H. POWER	POLE Ⓟ	CITY & STATE: JEWETT, IL
DRAWN BY: GARY CARLEE	- -	RAIL TRANSPORT GROUP ENGINEERING	7775 BAYMEADOWS WAY	R/R POLELINE	FENCE	FIRE PLUG Ⓕ	PROJECT #: IL2008020
CHECKED BY: ERNESTO PROSPERO	- -	COMMUNICATIONS AND SIGNALS	SUITE 250	GAS	WATER	SEWER CAP Ⓢ	OP #: IL0250
SSC #: JXXD00662	- -		JACKSONVILLE, FL 32256	FIBER OPTIC	SEWER	GAS VENT Ⓥ	DOT: 546393V

PROPOSED DESIGNER SKETCH
SCALE = 20:1

INDEX

CONTENTS

SH. NO.		REVISION NO. 1	2	3	4	5	6	7	8	9
I01	INDEX AND REVISIONS	╱								
S01	TRACK AND SIGNAL PLAN	╱								
P01	MINIMUM PROGRAM STEPS REPORT CWE-50	╱								
E01	POWER DISTRIBUTION	╱								
C01	DETECTION DEVICE CONSIST CWE-50	╱								
C02	DETECTION CIRCUITRY CWE-50	╱								
C03	DETECTION CIRCUITRY CWE-50	╱								
C04	CROSSING WARNING DEVICE GATE CIRCUITRY	╱								
C05	CROSSING WARNING DEVICE LIGHT CIRCUITRY	╱								
C06	CROSSING WARNING DEVICE CIRCUITRY	╱								
C07	SEAR II 1 CONFIGURATION & FUNCTIONS	╱								

╱ = PLANS SENT TO FIELD (DISTRIBUTED)

╳ = PLANS AS-IN-SERVICED (UP TO DATE)

REVISIONS

REV. NO.	PROJECT NO.	DESIGN DATE	IN SERVICE DATE	REVISION DATE
1	IL2008020	06-26-09		

TO BE COMPLETED ON A.I.S.

NEW WORK

SAFETRAN systems

PROJECT #: IL2008020
DES/CHKD BY: DPL/SWS
DATE: 06-26-09

= NOTE

4K.I01
REV. 02-29-08

CSX TRANSPORTATION
RAIL TRANSPORT GROUP ENGINEERING
COMMUNICATIONS AND SIGNALS

C.R. 1350E (COX ROAD) 546393V

INDEX AND REVISIONS
JEWETT, IL M.P. QS-121.50

DESIGNED	DIGITIZED	CHECKED	DATE
SAF/DPL	SAF/DPL	SAF/SWS	06-26-09

DESIGN DATE	REV. NO.	DRAWING	SHEET NO	FILE	SHEET
06-26-09	1	-----	-----	QS12150	I01

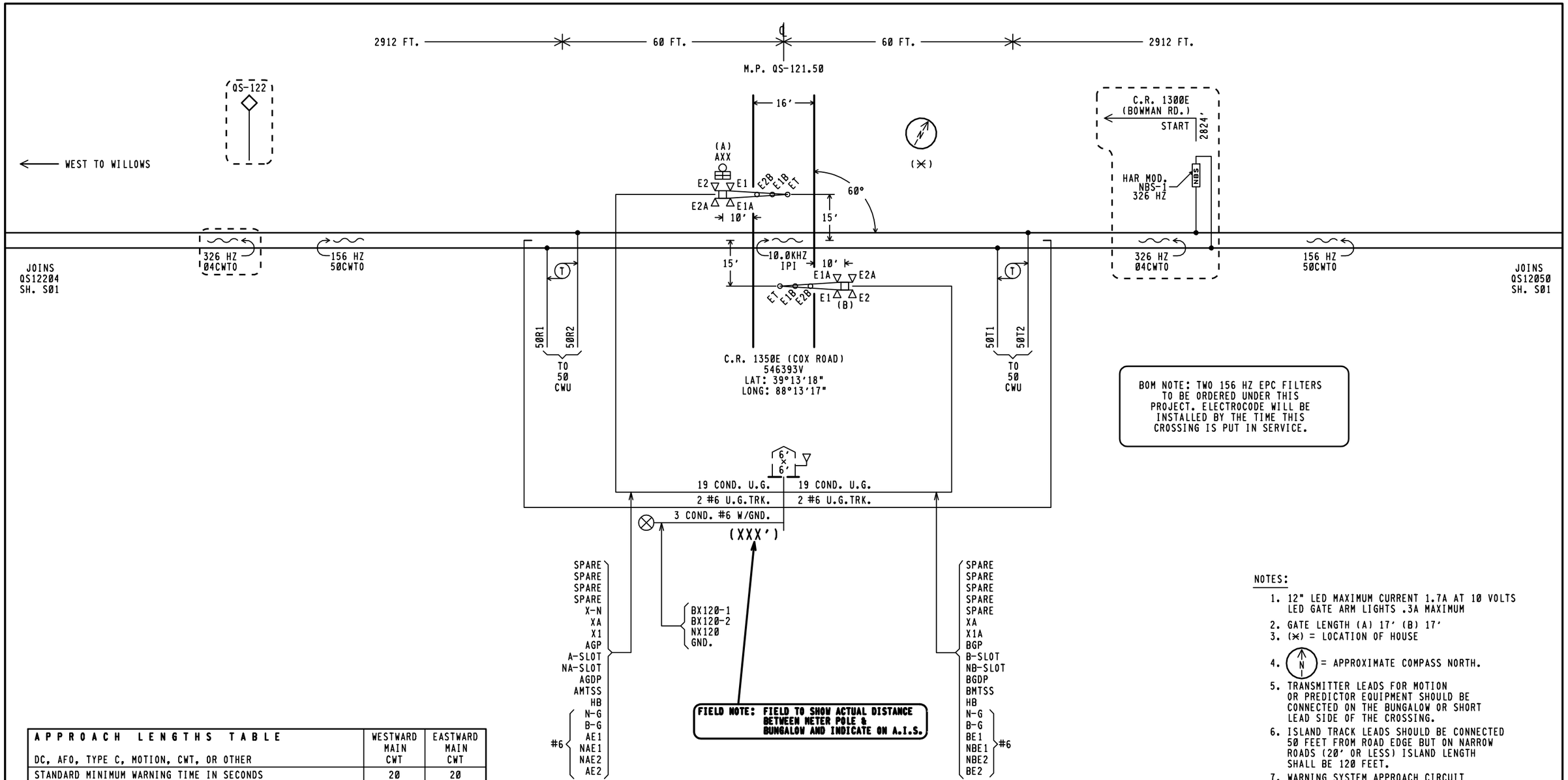

APPROACH LENGTHS TABLE DC, AFO, TYPE C, MOTION, CWT, OR OTHER	WESTWARD MAIN CWT	EASTWARD MAIN CWT
STANDARD MINIMUM WARNING TIME IN SECONDS	20	20
ROADWAY GATE TIME IN SECONDS	5	5
CLEARANCE TIME IN SECONDS	1	1
DOT TRAFFIC LIGHT SIMULTANEOUS PREEMPT TIME IN SECONDS✳	0	0
DESIGNED WARNING TIME FOR TRAINS AT TIME TABLE SPEED	26 SEC.	26 SEC.
DOT TRAFFIC LIGHT ADVANCE PREEMPT TIME IN SECONDS ✳	0	0
CONTROL EQUIPMENT DECISION TIME IN SECONDS	5	5
DESIGNED DETECTION TIME FOR TRAINS AT TIME TABLE SPEED	31 SEC.	31 SEC.
TIME TABLE MAXIMUM TRAIN SPEED IN MILES PER HOUR	60	60
BUFFER SPEED IN MILES PER HOUR	5	5
TOTAL WARNING SYSTEM DESIGN SPEED IN MILES PER HOUR	65	65
APPROACH DISTANCE TO ISLAND EDGE IN FEET	2912	2912
HALF WIDTH OF ISLAND IN FEET	60	60
APPROXIMATE MILE POSTS FOR APPROACH CIRCUIT	122.06	120.94

✳AUTHORIZING AGENCY: NONE
✳DATE OF REQUIREMENT: NONE
✳AMOUNT OF TIME (SEC.): NONE

NOTES:

1. 12" LED MAXIMUM CURRENT 1.7A AT 10 VOLTS LED GATE ARM LIGHTS .3A MAXIMUM
2. GATE LENGTH (A) 17' (B) 17'
3. (✳) = LOCATION OF HOUSE
4. (N) = APPROXIMATE COMPASS NORTH.
5. TRANSMITTER LEADS FOR MOTION OR PREDICTOR EQUIPMENT SHOULD BE CONNECTED ON THE BUNGALOW OR SHORT LEAD SIDE OF THE CROSSING.
6. ISLAND TRACK LEADS SHOULD BE CONNECTED 50 FEET FROM ROAD EDGE BUT ON NARROW ROADS (20' OR LESS) ISLAND LENGTH SHALL BE 120 FEET.
7. WARNING SYSTEM APPROACH CIRCUIT DISTANCES ARE TO BE MEASURED FROM THE ISLAND TRACK CONNECTIONS.

NEW WORK EXCEPT
= EXISTING

SAFETRAN systems

PROJECT #: IL2008020
DES/CHKD BY: DPL/SWS
DATE: 06-26-09

= NOTE

4K.S01
REV. 12-22-06

CSX TRANSPORTATION
RAIL TRANSPORT GROUP ENGINEERING
COMMUNICATIONS AND SIGNALS

C.R. 1350E (COX ROAD) 546393V

TRACK AND SIGNAL PLAN
JEWETT, IL M.P. QS-121.50

DESIGNED	DIGITIZED	CHECKED	DATE
SAF/DPL	SAF/DPL	SAF/SWS	06-26-09

DESIGN DATE	REV. NO.	DRAWING	SHEET NO	FILE	SHEET
06-26-09	1	-----	-----	QS12150	S01

Minimum Program Steps Report

Location and SIN

DOT Number: 546396V
Milepost Number: QS-121.50
Site Name: CR 1350E (COX ROAD)

SIN: 712541201116 *

* Parameter is part of office check number calculation.

MCF and Template Selection

MCF Name: GCP-T6X-02-1.mcf
MCF Revision: 021
MCFCRC: 6076E435

Template = 1A:6 Trk B1 *

* Parameter is part of office check number calculation.

Minimum Program Steps

TEMPLATE: track 1-B1, Island
Track 1 : GCP Frequency = 156 Hz
Track 1 : Approach Distance = 2912 ft
Track 1 : Prime Warning Time = 26 sec
Track 1 : GCP Transmit Level = High
Track 1 : Isl Frequency = 10.0 kHz

TEMPLATE: SSCC
SSCC-1 Number of GDs = 1 *
SSCC-2 Number of GPs = 1 *
SSCC-2 Number of GDs = 1 *
SSCC 1 : Lamp Neutral Test = Off Set in Field
SSCC 2 : Lamp Neutral Test = Off Set in Field

TEMPLATE: OOS
OOS Control = Display+OOS IPs *

TEMPLATE: IP assignment SSCC
IN 7.2 = Not Used *
IN 8.2 = Out Of Service IP 1 *
IN 8.4 = GD 2.1 *
IN 8.5 = GP 2.1 *

GCP: track 1
Track 1 : Island Distance = 120 ft *

GCP: track 1 enhanced det
Track 1 : Inbound PS Sensitivity = Off *
Track 1 : Trailing Switch Logic = Off *

ADVANCED: site options
Daylight Savings = On *

SSCC: 1
SSCC-1 Gate Delay = 5 sec *
SSCC 1 : Flash Rate = 55 *

SSCC: 2
SSCC-2 Gate Delay = 5 sec *
SSCC 2 : Flash Rate = 55 *

SEAR
DI 1 = Gnd Flt Tester 1 *
DI 2 = Gnd Flt Tester 2 *
Rly 1 = Ground Fault Test *
Rly 2 = AC Control *

SEAR: slot 7-8 inputs
IN 7.1 = TSS 1 *
IN 8.1 = TSS 2 *
IN 8.3 = POK 2 *

* Parameter is part of office check number calculation.

Check Numbers

Office Check Number: 7766FB35
Config. Check Number: 41A8B13C
(Based on MCF Revision 021)

Parameters not part of office check number calculation:

Track 1 : GCP Frequency = 156 Hz
Track 1 : Approach Distance = 2912 ft
Track 1 : Prime Warning Time = 26 sec
Track 1 : GCP Transmit Level = High
Track 1 : Isl Frequency = 10.0 kHz
SSCC 1 : Lamp Neutral Test = Off Set in Field
SSCC 2 : Lamp Neutral Test = Off Set in Field

NEW WORK

SAFETRAN systems

PROJECT #: IL2008020
DES/CHKD BY: DPL/SWS
DATE: 06-26-09

CSX TRANSPORTATION
RAIL TRANSPORT GROUP ENGINEERING
COMMUNICATIONS AND SIGNALS

C.R. 1350E (COX ROAD) 546393V

MINIMUM PROGRAM STEPS REPORT CWE-50
JEWETT, IL M.P. QS-121.50

4000GCP.P01
REV. 01-28-08

DESIGNED	DIGITIZED	CHECKED	DATE
SAF/DPL	SAF/DPL	SAF/SWS	06-26-09

DESIGN DATE	REV. NO.	DRAWING	SHEET NO	FILE	SHEET
06-26-09	1	-----	-----	QS12150	P01

TOP ROW

ACR			X-B POKR			MCR		
12	B	B77	9	11 F	N66	9 F	11	N41
15		C30	10 F	12	C48	10	12	C48
22	B				C49			C49
25			OB POKR			B-G POKR		
32	B		9	11 F	N66	9 F	11 F	N66
35			10 F	12	C48	10 F	12	C48

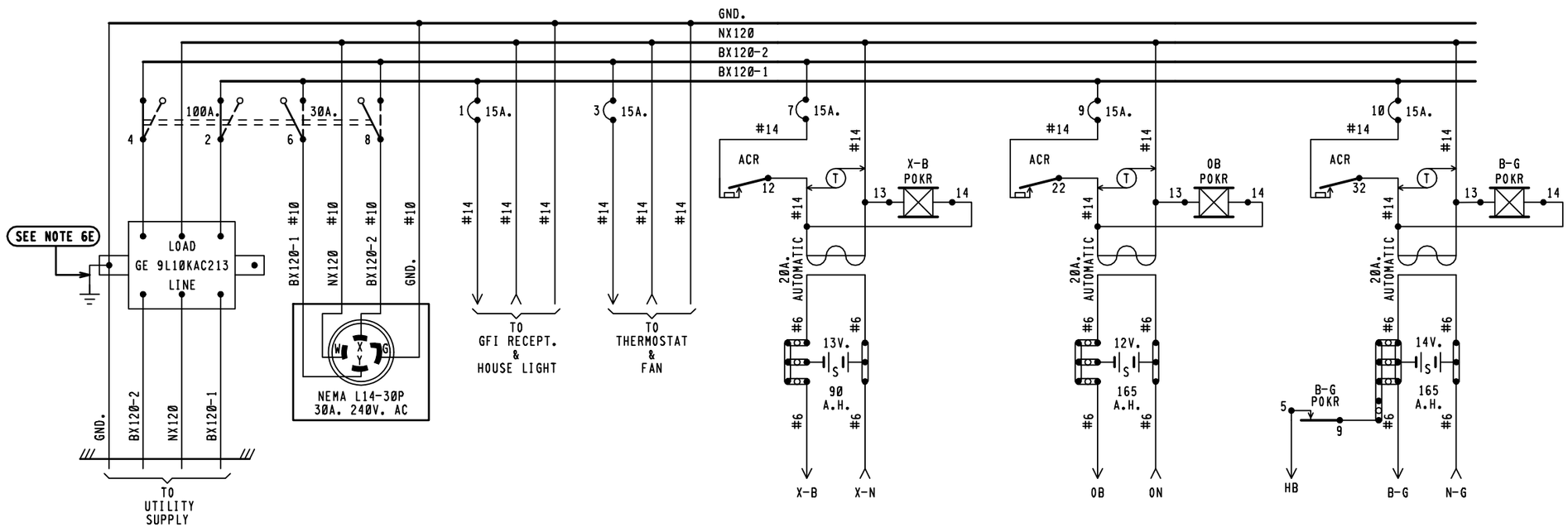

BX120-1	BX120-2
16.0 AMPS	8.0 AMPS

MAXIMUM LOAD
CALCULATED PER SS360

NOTES:

1 - REFERENCES ARE PER SCMS-13.
2 - ARRESTERS ARE PER SS382.
3 - SHELF RELAY PLACEMENT ON CONSIST CHART HAS NO SIGNIFICANCE.
4 - PLUG-IN RELAYS ARE VIEWED FROM THE FRONT OF RACK.
5 - BATTERY A.H. CAPACITY SHOWN IS THE MINIMUM REQUIREMENT.
6 - WIRING
  A - FEED TO ALL BUSSES, LIGHT CIRCUITS,MOTOR CIRCUITS TO BE #10 FLEX.
  B - 120-VOLT FEED FROM ENTRANCE TO POWER BUSS TO BE #10 FLEX.
  C - ALL TRACK WIRES TO BE #10 FLEX.
  D - ALL OTHERS TO BE #16 FLEX UNLESS NOTED.
  E - GROUND WIRE NOT NECESSARY WHEN GE ARRESTER IS MOUNTED ON GROUND PLANE OR METAL ENCLOSURE AFFIXED DIRECTLY TO BUNGALOW METALLIC STRUCTURAL MEMBER.
7 - CIRCUIT INTERRUPTERS 2 & 4 ARE MECHANICALLY INTERLOCKED WITH CIRCUIT INTERRUPTERS 6 & 8.

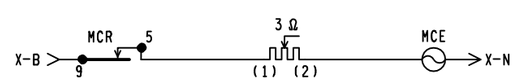

NEW WORK

SAFETRAN systems

PROJECT #: IL2008020
DES/CHKD BY: DPL/SWS
DATE: 06-26-09

= NOTE

4000GCP.E01
REV. 02-29-08

6'X 6' RELAY HOUSE W/FARADAY SHIELD

CSX TRANSPORTATION
RAIL TRANSPORT GROUP ENGINEERING
COMMUNICATIONS AND SIGNALS

C.R. 1350E (COX ROAD) 546393V

POWER DISTRIBUTION
JEWETT, IL M.P. QS-121.50

DESIGNED	DIGITIZED	CHECKED	DATE
SAF/DPL	SAF/DPL	SAF/SWS	06-26-09

DESIGN DATE	REV. NO.	DRAWING	SHEET NO	FILE	SHEET
06-26-09	1	-----	-----	QS12150	E01

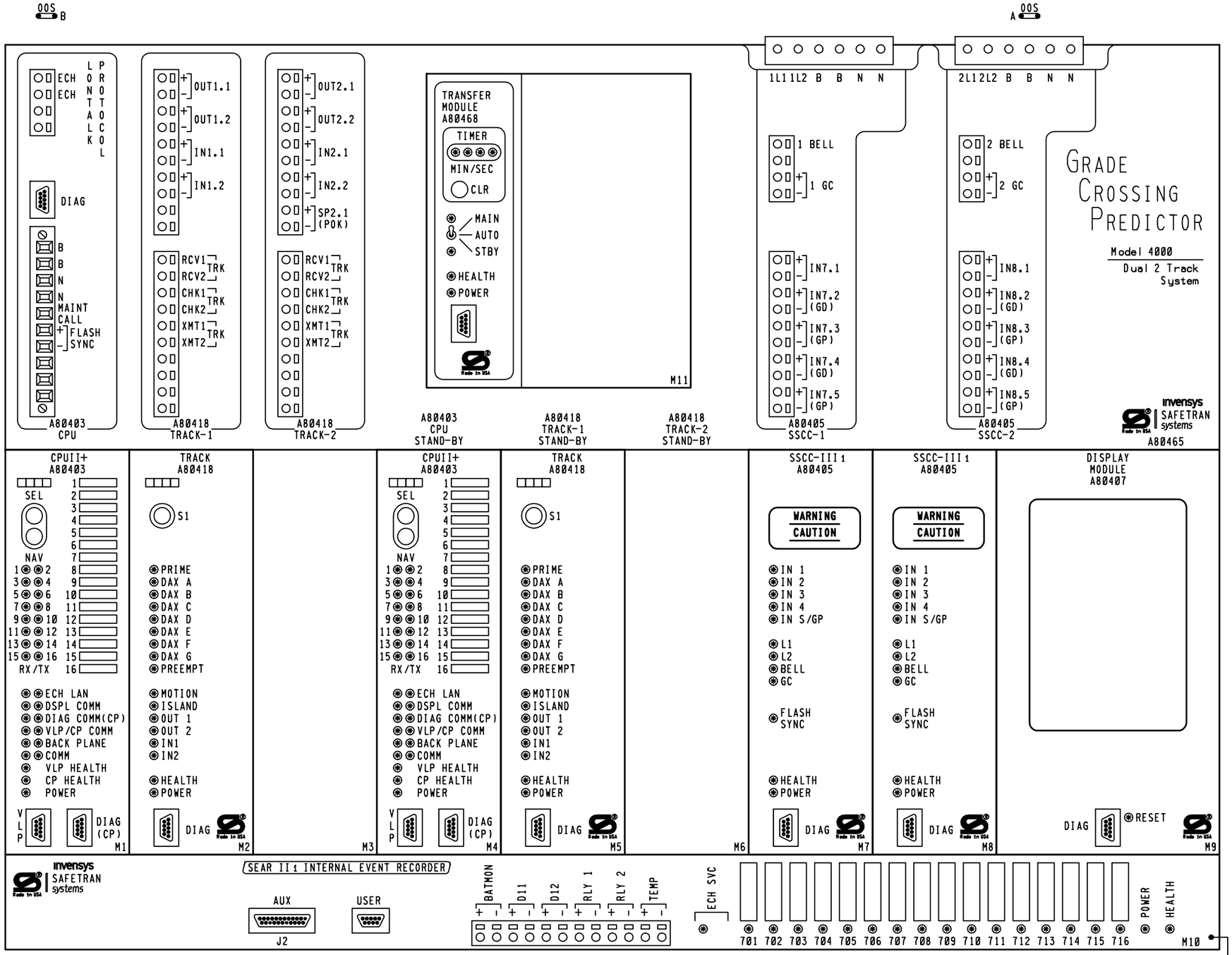

DIMENSIONS 23.25"W X 22.15"H X 12.38"D

GCP 4000 APPLICATION NOTES:

1. THE GRADE CROSSING PREDICTOR (GCP) IS A MODULAR MICROPROCESSOR CONTROLLED SYSTEM THAT IS DEPLOYED TO CONTINUALLY MONITOR THE APPROACHES TO RAILROAD GRADE CROSSINGS AND TO CONTROL THE LAMPS, GATES AND BELLS ASSOCIATED WITH THOSE CROSSINGS. WHEN EQUIPPED WITH THE SEAR II1 MODULE THE GCP 4000 WILL RECORD EVENTS AND REPORT ALARMS WHEN CONNECTED TO AN OFFICE SYSTEM.

2. THE GCP 4000 GCP (A80465) IS A TWO TRACK REDUNDANT UNIT CAPABLE OF DRIVING 4 INDEPENDENT FLASHER AND GATE SIGNALS AND RECORDING EVENTS AND REPORTING ALARMS. THIS A80465 INCLUDES THE FOLLOWING MODULES:

SLOT	MODULE	FUNCTION	PART NO.
M1	CPU-II+	MAIN	A80403
M2	TRACK-1	MAIN	A80418
M3	PANEL	NONE	D39325
M4	CPU-II+	STANDBY	A80403
M5	TRACK-1	STANDBY	A80418
M6	PANEL	NONE	D39325
M7	SSCC-III1	A SIGNAL	A80405
M8	SSCC-III1	B SIGNAL	A80405
M9	DISPLAY MODULE		A80407
TOP CENTER	TRANSFER UNIT		A80468
LOWER BAY	SEAR II1	RECORDER	A80410

3. EACH TRACK MODULE HAS TWO PROGRAMMABLE INPUTS AND TWO PROGRAMMABLE OUTPUTS.

4. THE SEAR II1 INTERNAL EVENT RECORDER HAS INPUTS FOR ONE BATTERY MONITOR, TWO NON-VITAL INPUTS AND TWO PROGRAMMABLE RELAY DRIVES (HEEL/FRONT).

5. LOCATED ON THE FRONT OF EACH MODULE THERE ARE LED LIGHTS TO INDICATE THE ACTIVITY OF CERTAIN FUNCTIONS OCCURRING INSIDE THE GCP.

6. BETWEEN SLOT 1 & 2 THERE IS A CHASSIS INDENTIFICATION CHIP (CIC) SOCKET AND AN ECD CONNECTOR (DB-25 FEMALE).

7. UPON THE FAILURE OF A MODULE IN SLOTS M1-M3 THE AUTOMATIC TRANSFER UNIT SWITCHES TO THE STANDBY MODULES IN SLOTS M4-M6.

8. THE GCP 4000 GCP (A80465) MAY USE RIO MODULES IN SLOTS M3 AND M6.

NEW WORK

SAFETRAN systems

PROJECT #: IL2008020
DES/CHKD BY: DPL/SWS
DATE: 06-26-09

CSX TRANSPORTATION
RAIL TRANSPORT GROUP ENGINEERING
COMMUNICATIONS AND SIGNALS

C.R. 1350E (COX ROAD) 546393V

DETECTION DEVICE CONSIST CWE-50
JEWETT, IL M.P. QS-121.50

4000GCP.C01
REV. 11-30-08

DESIGNED	DIGITIZED	CHECKED	DATE
SAF/DPL	SAF/DPL	SAF/SWS	06-26-09

DESIGN DATE	REV. NO.	DRAWING	SHEET NO	FILE	SHEET
06-26-09	1	-----	-----	QS12150	C01

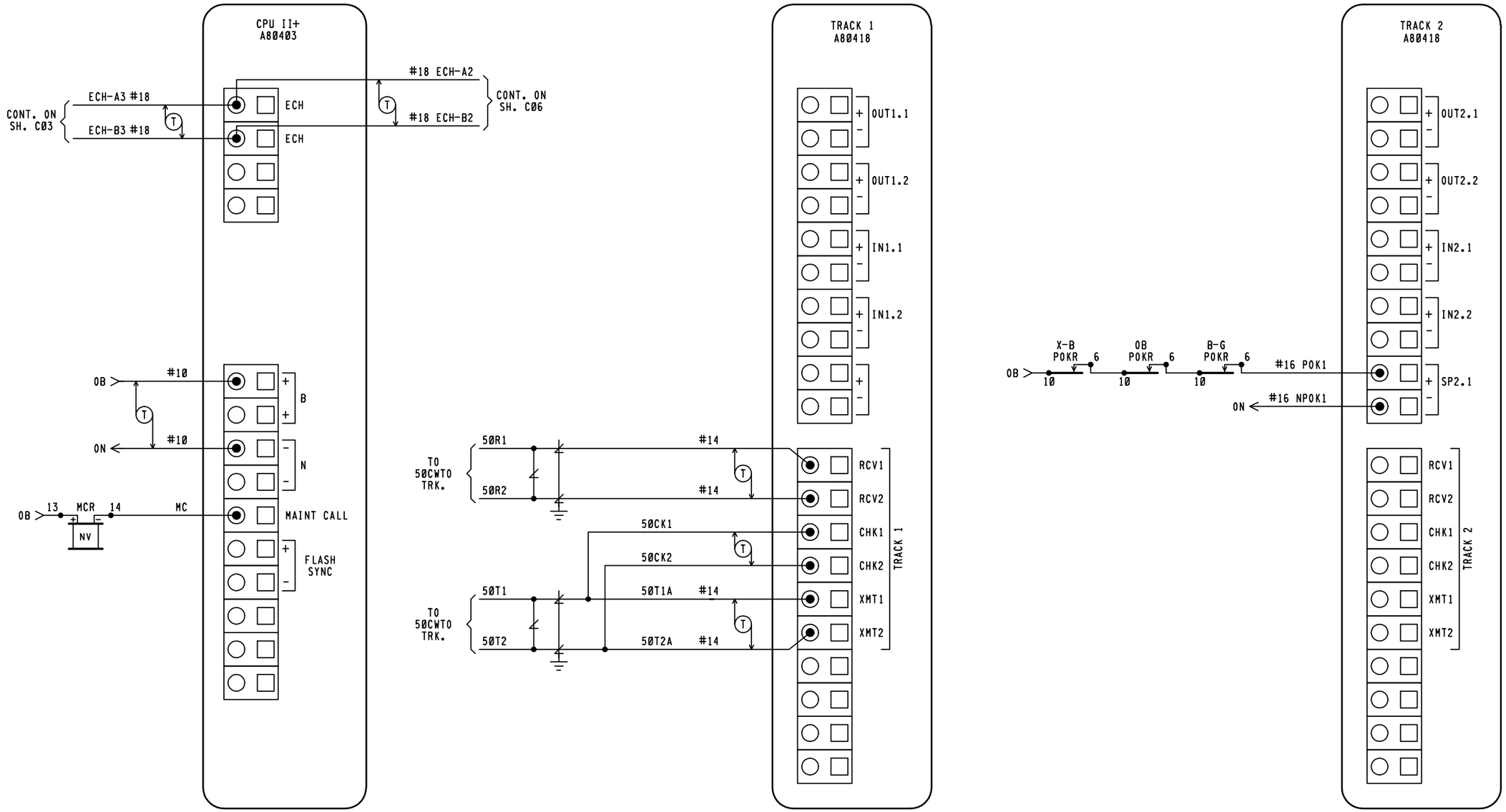

NOTE:

ECHELON CONNECTIONS NOT TO EXCEED 53' IN LENGTH AND TOTAL LENGTH COMBINED NOT TO EXCEED 430' WITH A MAXIMUM OF 8 NODES. RECOMMEND USE BELDEN WIRE CABLE #8461 OR EQUIVALENT.

NEW WORK

SAFETRAN systems

PROJECT #: IL2008020
DES/CHKD BY: DPL/SWS
DATE: 06-26-09

CSX TRANSPORTATION

RAIL TRANSPORT GROUP ENGINEERING
COMMUNICATIONS AND SIGNALS

C.R. 1350E (COX ROAD) 546393V

DETECTION CIRCUITRY CWE-50
JEWETT, IL M.P. QS-121.50

4000GCP.C02
REV. 11-30-08

DESIGNED	DIGITIZED	CHECKED	DATE
SAF/DPL	SAF/DPL	SAF/SWS	06-26-09

DESIGN DATE	REV. NO.	DRAWING	SHEET NO	FILE	SHEET
06-26-09	1	-----	-----	QS12150	C02

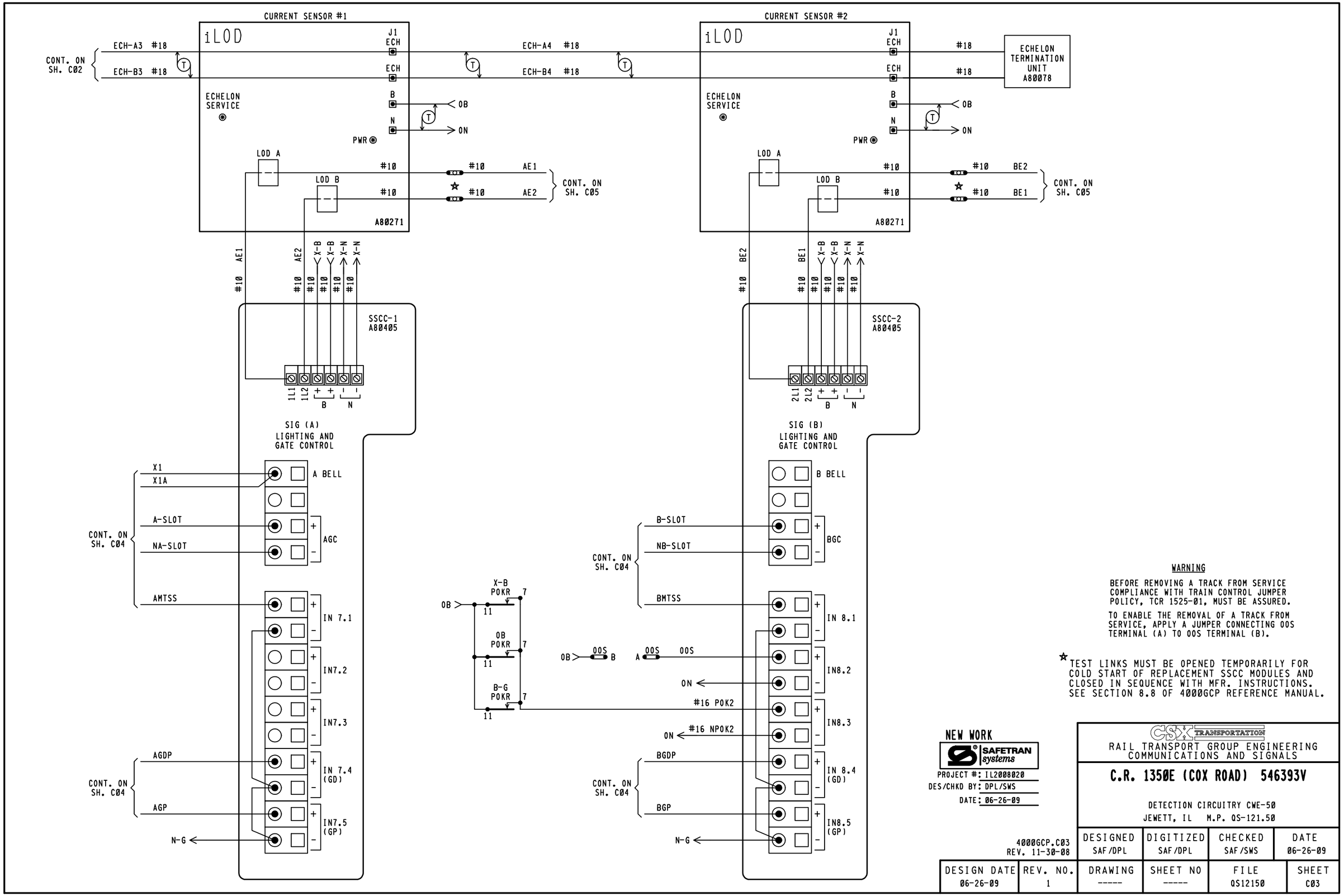

WARNING

BEFORE REMOVING A TRACK FROM SERVICE COMPLIANCE WITH TRAIN CONTROL JUMPER POLICY, TCR 1525-01, MUST BE ASSURED.

TO ENABLE THE REMOVAL OF A TRACK FROM SERVICE, APPLY A JUMPER CONNECTING 00S TERMINAL (A) TO 00S TERMINAL (B).

☆ TEST LINKS MUST BE OPENED TEMPORARILY FOR COLD START OF REPLACEMENT SSCC MODULES AND CLOSED IN SEQUENCE WITH MFR. INSTRUCTIONS. SEE SECTION 8.8 OF 4000GCP REFERENCE MANUAL.

NEW WORK

SAFETRAN systems

PROJECT #: IL2008020
DES/CHKD BY: DPL/SWS
DATE: 06-26-09

CSX TRANSPORTATION

RAIL TRANSPORT GROUP ENGINEERING
COMMUNICATIONS AND SIGNALS

C.R. 1350E (COX ROAD) 546393V

DETECTION CIRCUITRY CWE-50
JEWETT, IL M.P. QS-121.50

4000GCP.C03
REV. 11-30-08

DESIGNED	DIGITIZED	CHECKED	DATE
SAF/DPL	SAF/DPL	SAF/SWS	06-26-09

DESIGN DATE	REV. NO.	DRAWING	SHEET NO	FILE	SHEET
06-26-09	1	-----	-----	QS12150	C03

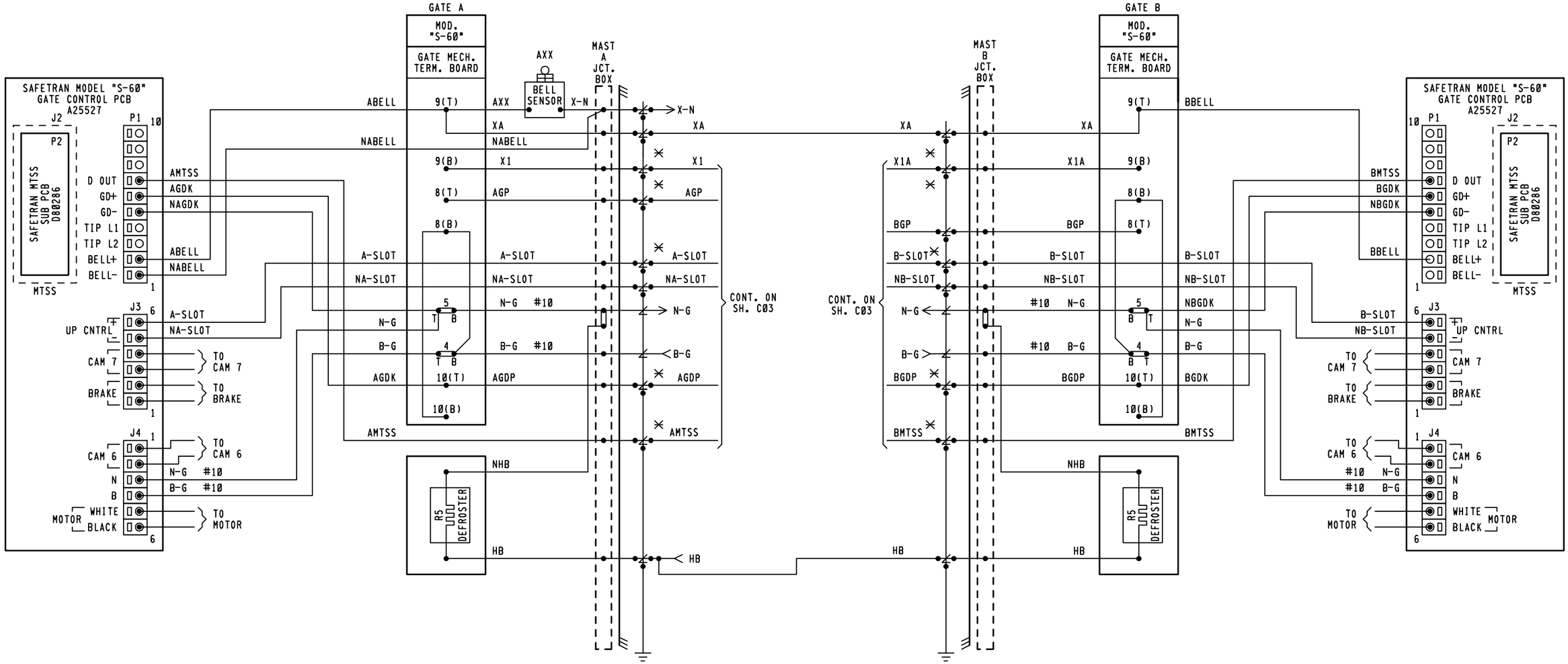

NOTES:
1. ✕ = TEST LINKS MUST BE OPEN TEMPORARILY FOR COLD START OF REPLACEMENT SSCC MODULES AND AND CLOSED IN SEQUENCE WITH MFR. INSTRUCTIONS. SEE SECTION 8.8 OF 4000GCP REFERENCE MANUAL.
2. = TERMINAL IN JCT. BOX BASE
3. ALL WIRING #16 UNLESS NOTED OTHERWISE.

NEW WORK

SAFETRAN systems

PROJECT #: IL2008020
DES/CHKD BY: DPL/SWS
DATE: 06-26-09

CSX TRANSPORTATION
RAIL TRANSPORT GROUP ENGINEERING
COMMUNICATIONS AND SIGNALS

C.R. 1350E (COX ROAD) 546393V

CROSSING WARNING DEVICE GATE CIRCUITRY
JEWETT, IL M.P. QS-121.50

4000GCP.C04
REV. 11-30-08

DESIGNED	DIGITIZED	CHECKED	DATE
SAF/DPL	SAF/DPL	SAF/SWS	06-26-09

DESIGN DATE	REV. NO.	DRAWING	SHEET NO	FILE	SHEET
06-26-09	1	-----	-----	QS12150	C04

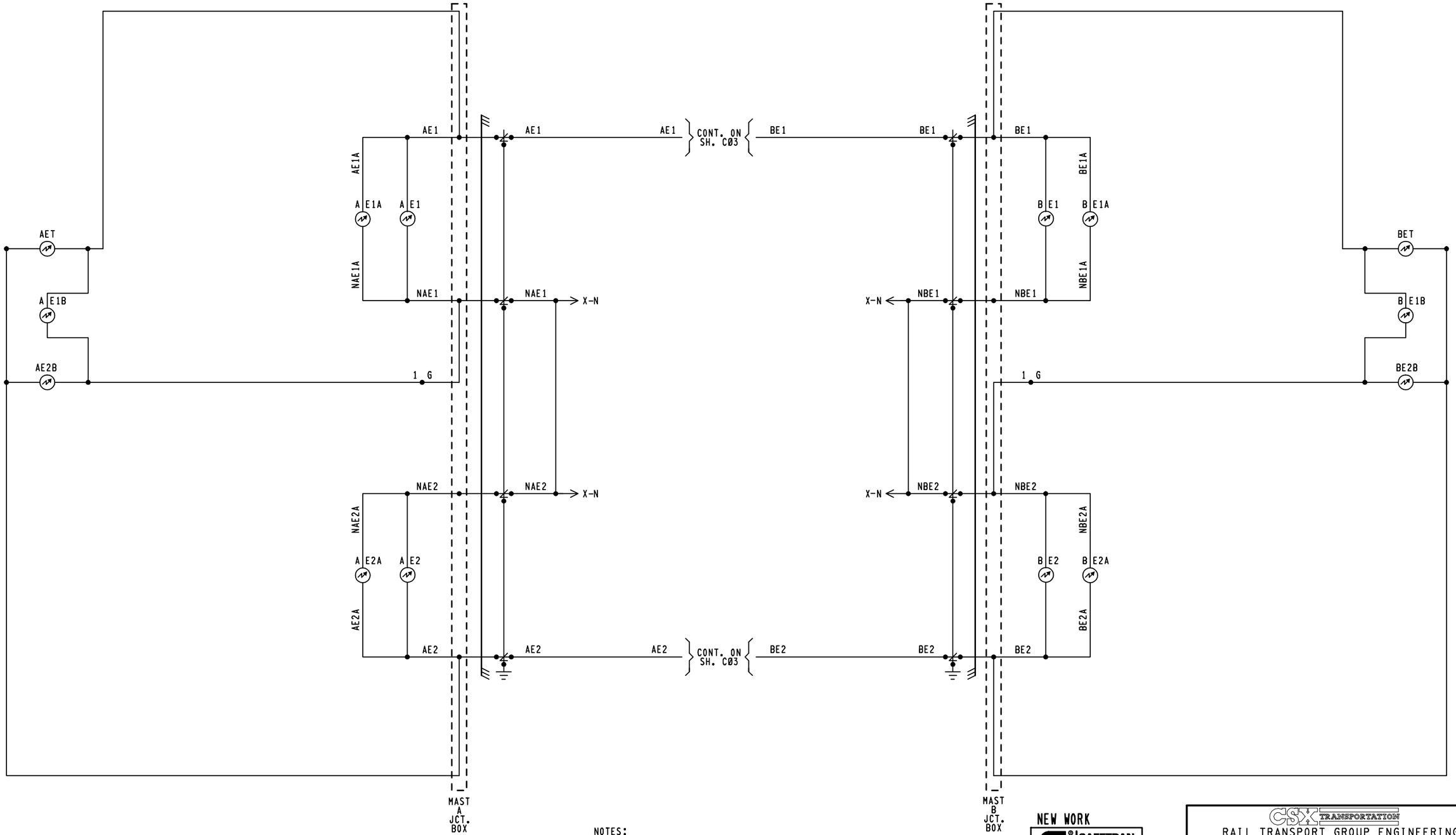

NOTES:

1. = TERMINAL IN JUNCTION BOX
2. WHEN 7 OR MORE LIGHTS ON A SINGLE STRUCTURE REFER TO SS382 FOR REQUIRED ARRESTERING
3. FEEDS TO ALL BUSSES AND LIGHT CIRCUITS ARE #10 FLEX
4. UNLESS NOTED ALL OTHER WIRING #16
5. CABLING SPECIFICATIONS SHOWN ON SH. S01
6. [T] = TIP SENSOR

NEW WORK

SAFETRAN systems

PROJECT #: IL2008020
DES/CHKD BY: DPL/SWS
DATE: 06-28-08

CSX TRANSPORTATION
RAIL TRANSPORT GROUP ENGINEERING
COMMUNICATIONS AND SIGNALS

C.R. 1350E (COX ROAD) 546393V

CROSSING WARNING DEVICE LIGHT CIRCUITRY
JEWETT, IL M.P. QS-121.50

4000GCP.C05
REV. 10-04-06

DESIGNED	DIGITIZED	CHECKED	DATE
SAF/DPL	SAF/DPL	SAF/SWS	06-28-08

DESIGN DATE	REV. NO.	DRAWING	SHEET NO	FILE	SHEET
06-28-08	1	-----	-----	QS12150	C05

WAYSIDE ACCESS GATEWAY CONFIGURATION	
SITE ATCS ADDRESS	7.125.412.011.07.01 7.125.LLL.GGG.SS.DD
SERIAL INTERFACE	38,400,NONE,8,1/NOFLOW
SERIAL FORMAT	RAW
WAG TEST MODE	DISABLED
ECHELON ADDRESS	01.07
UDP PORTS	5000, 5001, 5002, 5003
ROUTE TABLE EXPIRY	5400 SEC
BROADCAST MEDIUM	IP ETHERNET
TCP PORTS	23, 10023, 6001, 6002
DHCP SERVER	DISABLED
IP ADDRESS	192.168.13.1
TYPE 7 ROUTE LENGTH	12--7RRLLLGGGSS
IP NETWORK MASK	255.255.255.0
WAG CIRCUIT ID	DISABLE
ROUTING REGION DOMAIN 1	OCGSERVER1.JAX.COM
ATCS SERVER UDP PORT NUMBER	6001
TELNET NUMBERS	WAG 6002, SERIAL 10023
DEFAULT GATEWAY IP	192.168.013.031

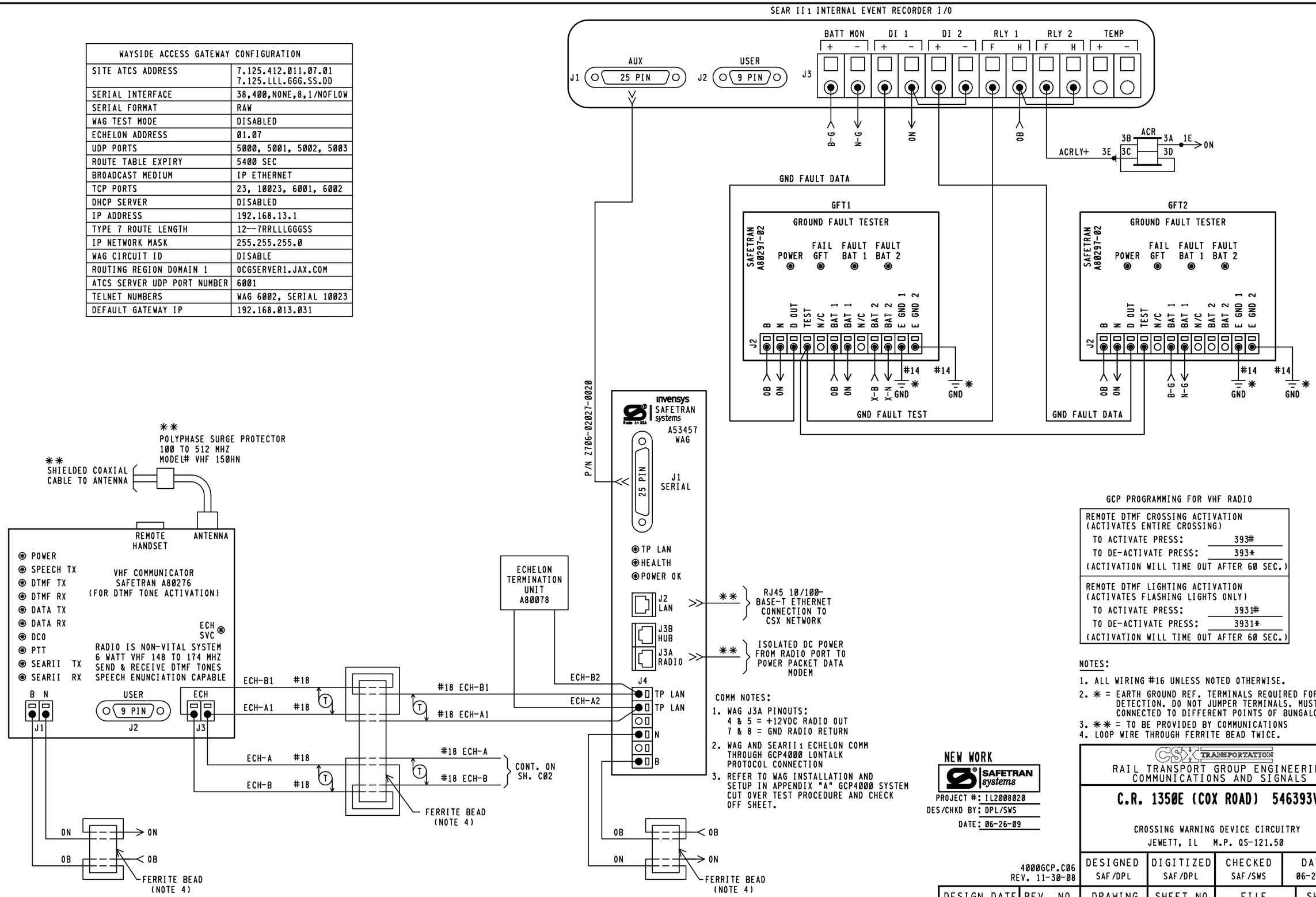

GCP PROGRAMMING FOR VHF RADIO

REMOTE DTMF CROSSING ACTIVATION (ACTIVATES ENTIRE CROSSING)	
TO ACTIVATE PRESS:	393#
TO DE-ACTIVATE PRESS:	393*
(ACTIVATION WILL TIME OUT AFTER 60 SEC.)	
REMOTE DTMF LIGHTING ACTIVATION (ACTIVATES FLASHING LIGHTS ONLY)	
TO ACTIVATE PRESS:	3931#
TO DE-ACTIVATE PRESS:	3931*
(ACTIVATION WILL TIME OUT AFTER 60 SEC.)	

NOTES:

1. ALL WIRING #16 UNLESS NOTED OTHERWISE.
2. * = EARTH GROUND REF. TERMINALS REQUIRED FOR DETECTION. DO NOT JUMPER TERMINALS. MUST BE CONNECTED TO DIFFERENT POINTS OF BUNGALOW.
3. ** = TO BE PROVIDED BY COMMUNICATIONS
4. LOOP WIRE THROUGH FERRITE BEAD TWICE.

NEW WORK

SAFETRAN systems

PROJECT #: IL2008020
DES/CHKD BY: DPL/SWS
DATE: 06-26-09

CSX TRANSPORTATION
RAIL TRANSPORT GROUP ENGINEERING
COMMUNICATIONS AND SIGNALS

C.R. 1350E (COX ROAD) 546393V

CROSSING WARNING DEVICE CIRCUITRY
JEWETT, IL M.P. QS-121.50

4000GCP.C06
REV. 11-30-08

DESIGNED	DIGITIZED	CHECKED	DATE
SAF/DPL	SAF/DPL	SAF/SWS	06-26-09

DESIGN DATE	REV. NO.	DRAWING	SHEET NO	FILE	SHEET
06-26-09	1	-----	-----	QS12150	C06

DEFAULTS AND/OR STYLE		FIELD RECORD
SEAR II1 EXECUTIVE PROGRAM	VERSION: 9V725A01	VERSION: _____
APPLICATION PROGRAM (IF LOADED)	VERSION: 9V864A01	VERSION: _____

NOTE TO INSPECTOR: AT IN SERVICE OF SEAR II1 OR UPDATE OF ITS INTERNAL EXECUTIVE PROGRAM OR ITS CSXT APPLICATION PROGRAM, THE VERSION NUMBER OF EACH PROGRAM MUST BE INSERTED IN THE BLANK FIELDS.

SITE SET UP MENU	
FUNCTION	LED DISPLAY
DATE/TIME	XX-XX-XXXX XX:XX:XX
AUTOMATIC DST ADJUSTMENT	YES
TIME ZONE	EASTERN
SITE NAME	C.R. 1350E (COX ROAD)
MILEPOST	QS-121.50
DOT NUMBER	546393V
TESTER TYPE	CROSSING
DATE FORMAT	MM-DD-YYYY
TEMP FORMAT	FAHRENHEIT
INDICATE HOLD (SEC)	0
INDICATE REFRESH (SEC)	60
SITE ATCS ADDRESS	7.125.412.011.99.01 (7.RRR.LLL.GGG.99.01)
SITE TYPE	COLLECTOR
OFFICE ADDRESS	2.125.00.0000 (2.RRR.NN.DDDD)
POLL ID	1
MODE	GEN/ATCS
WAMS XID	DISABLED
OFFICE COMM. DEVICE	■ WAG (ECHELON) ☐ DIRECT (RS232) ☐ MCM (ECHELON) ☐ MCM (RS232) ☐ DIAL MODEM ☐ S200 RADIO (RS422)
RADIO ATCS ADDR	7.125.XXX.XXX.07.01 (7.RRR.LLL.GGG.NN.01)
FIELD COMM. DEVICE	☐ WAG (ECHELON) ■ NONE ☐ VHF COMM. (ECHELON) ☐ VHF COMM. (RS232) ☐ SPREAD-SPECTRUM (RS232)
USER PORT BAUD	57,600
USER PORT DATA BITS	8
USER PORT PARITY	NONE
USER PORT STOP BITS	1
USER PORT FLOW CONTROL	NONE
AUX PORT BAUD	38,400
AUX PORT DATA BITS	8
AUX PORT PARITY	NONE
AUX PORT STOP BITS	1
AUX PORT FLOW CONTROL	NONE

NOTE 8

EDIT DIGITAL INPUTS	■ NO	☐ YES
EDIT BATTERIES	■ NO	☐ YES
EDIT RELAYS	■ NO	☐ YES
EDIT INDICATOR LEDS	■ NO	☐ YES
EDIT TEST LED'S	■ NO	☐ YES
EDIT ILOD SENSOR	■ NO	☐ YES
EDIT VHF SETTINGS	■ NO	☐ YES

INSPECTOR NOTE:
CURRENT VALUES MAY VARY DEPENDANT ON FIELD CONDITIONS. MARK UP PER ACTUAL READINGS FOR IN-SERVICE REVISION.

LIT BULB COUNT ON EACH CIRCUIT	NO.	TYPE OF BULB	CURRENT READING IN AMP. AT APPROX. 10.0 V ARRAY VOLTAGE
CURRENT SENSOR (1) AE1: LAMP SET UP	4	☐ BULBS ■ LED	4.0
CURRENT SENSOR (1) AE2: LAMP SET UP	4	☐ BULBS ■ LED	4.0
CURRENT SENSOR (2) BE1: LAMP SET UP	4	☐ BULBS ■ LED	4.0
CURRENT SENSOR (2) BE2: LAMP SET UP	4	☐ BULBS ■ LED	4.0

VHF RADIO CHANNELS			
1	161.130	5	161.550
2	160.710	6	160.785
3	160.560	7	160.785
4	160.860	8	160.785

NOTE 9

MENU → CONFIGURATION	
MODULE TYPE	WAG
MODULE NAME	DEFAULT
WAG ECHELON NODE	7

NOTE:
REFER TO WAG INSTALLATION AND SETUP IN APPENDIX "A" GCP4000 SYTEM CUT OVER, TEST PROCEDURE AND CHECK OFF SHEET.

MEASURE BATTERY VOLTAGE AT INPUT		
BATTERY VOLTAGE	OB	_____ VOLTS
BATTERY VOLTAGE	X-B	_____ VOLTS
BATTERY VOLTAGE	B-G	_____ VOLTS

NOTES:

1. OPTION AVAILABLE IF VHF COMMUNICATOR = YES LAST 3 DIGITS OF DOT NUMBER.
2. OPTION AVAILABLE IF 1LODS.
3. OPTION AVAILABLE IF BELL SENSORS.
4. OPTION AVAILABLE IF GATES.
5. OPTION AVAILABLE IF VHF RADIO.
6. ONLY YES IN SPECIAL CIRCUMSTANCES.
7. SELECT "MENU" THEN "CONFIGURATION" FROM SEAR II INTERFACE KEYPAD TO ACCESS MODULE CONFIGURATION MENU.
8. BATTERY BANKS? = NUMBER OF BANKS EXCLUDING THE BANK APPLIED TO THE BAT MON SEAR INPUT
9. YES ON INITIAL SETUP

CONTROL SYSTEM CONFIGURATION MENU QUESTIONS		
	OPTION	SELECTION
NOTE 9	RESET NAMES / MODULES	NO ■ YES ☐
	RAILROAD NUMBER	125
	CROSSING CONFIGURATION	NORMAL ■ SPLIT GATE ☐ EXTERNAL ENTRANCE GATE CONTROLLER(S) ☐
	AND1 USED AS XR	NO ☐ YES ■
	AND2 USED AS XR	NO ■ YES ☐
	AND3 USED AS XR	NO ■ YES ☐
	AND4 USED AS XR	NO ■ YES ☐
	AND5 USED AS XR	NO ■ YES ☐
	AND6 USED AS XR	NO ■ YES ☐
	AND7 USED AS XR	NO ■ YES ☐
	AND8 USED AS XR	NO ■ YES ☐
	ENTRANCE GATES?	0 ☐ 1 ☐ 2 ■ 3 ☐ 4 ☐ 5 ☐ 6 ☐ 7 ☐ 8 ☐
	GATE POSITION FAIL?	20 SECS.
NOTE 8	BATTERY BANKS?	1 ☐ 2 ■ 3 ☐
	BATT MON USED?	NO ☐ YES ■
	OB RESOLUTION?	0.2 ■ 0.5 ☐ 1.0 ☐
	X-B RESOLUTION?	0.2 ■ 0.5 ☐ 1.0 ☐ NOT PRESENT ☐
	X-B2 RESOLUTION?	0.2 ☐ 0.5 ☐ 1.0 ☐ NOT PRESENT ■
	BATT MON RESOLUTION?	0.2 ☐ 0.5 ☐ 1.0 ■ NOT PRESENT ☐
	INTERNAL CROSSING CONTROLLERS?	0 ☐ 1 ☐ 2 ■
	EXTERNAL CROSSING CONTROLLERS?	0 ■ 1 ☐ 2 ☐
	VHF COMMUNICATOR?	YES ■ NO ☐
	DTMF ACTVATION?	YES ■ NO ☐
NOTE 1	ACTIVATION CODE	393
	ACTIVATION TIMEOUT	(60 SEC)
	1LOD MODULES?	0 ☐ 1 ☐ 2 ■ 3 ☐ 4 ☐
NOTE 2	ANY LED BULBS USED?	NO ☐ YES ■
	AUTO INSPECTIONS?	YES ☐ NO ■
NOTE 3	BELL SENSORS*	0 ☐ 1 ■ 2 ☐ 3 ☐ 4 ☐
	BELL SENSOR TSS 1?	NO ☐ YES ■
	BELL SENSOR TSS 2?	NO ■ YES ☐
	BELL SENSOR TSS 3?	NO ■ YES ☐
	BELL SENSOR TSS 4?	NO ■ YES ☐
	BELL SENSOR TSS 5?	NO ■ YES ☐
	BELL SENSOR TSS 6?	NO ■ YES ☐
	BELL SENSOR TSS 7?	NO ■ YES ☐
	BELL SENSOR TSS 8?	NO ■ YES ☐
	BELL ON?	GATES LOWERING ■ GATES MOVING ☐ ALWAYS ☐
	GFT'S	YES ■ NO ☐
	BATTERIES ON GFT1	1 ☐ 2 ■
NOTE 4	GATE TIP SENSORS?	YES ☐ NO ■
	RTU	NO ■ YES ☐
NOTE 5	VHF VOICE CHANNEL	1 ☐ 2 ☐ 3 ☐ 4 ☐ 5 ☐ 6 ☐ 7 ☐ 8 ☐
	VHF DATA CHANNEL	1 ☐ 2 ☐ 3 ☐ 4 ☐ 5 ☐ 6 ☐ 7 ☐ 8 ☐
	USE NON-CRITICAL FEATURE?	NO ■ YES ☐
	FULL APPROACH MOVE ALARMS?	ACTIVATE ■ DO NOT ACTIVATE ☐
	ENABLE PASSWORD	NO ■ YES ☐

NEW WORK

SAFETRAN systems

PROJECT #: IL2008020
DES/CHKD BY: DPL/SWS
DATE: 06-26-09

◯ = NOTE

4000GCP.C07
REV. 11-30-08

CSX TRANSPORTATION
RAIL TRANSPORT GROUP ENGINEERING
COMMUNICATIONS AND SIGNALS

C.R. 1350E (COX ROAD) 546393V

SEAR II1 CONFIGURATION & FUNCTIONS
JEWETT, IL M.P. QS-121.50

DESIGNED	DIGITIZED	CHECKED	DATE
SAF/DPL	SAF/DPL	SAF/SWS	06-26-09

DESIGN DATE	REV. NO.	DRAWING	SHEET NO	FILE	SHEET
06-26-09	1	-----	-----	QS12150	C07