APPROACH LENGTHS ALLOW FOR:	
TIME IN SECONDS	MAIN E.B./W.B. APPROACH
STANDARD MUTCD MIN. TIME	20
DESIGNED WARNING TIME	30
EQUIPMENT RESPONSE TIME	5
TOTAL TIME	35
MAX. SPEED (M.P.H.)	60
APPROACH DISTANCE (FEET)	3087

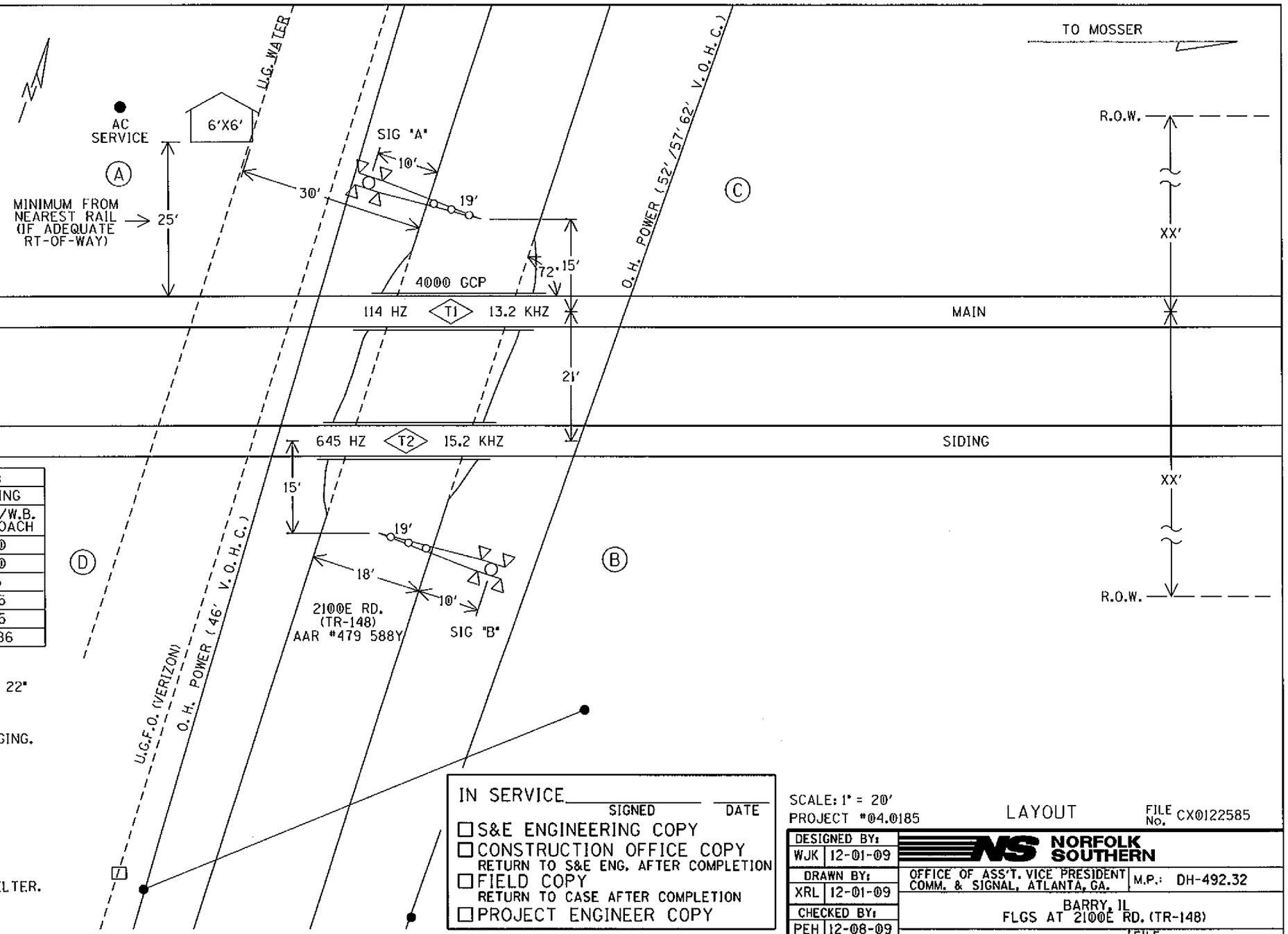

APPROACH LENGTHS ALLOW FOR:	
TIME IN SECONDS	SIDING E.B./W.B. APPROACH
STANDARD MUTCD MIN. TIME	20
DESIGNED WARNING TIME	30
EQUIPMENT RESPONSE TIME	5
TOTAL TIME	35
MAX. SPEED (M.P.H.)	25
APPROACH DISTANCE (FEET)	1286

NOTES:

1. MAX. TRAIN SPEED 60 M.P.H., 25 M.P.H. SIDING
2. LATITUDE N 39° 42' 20" LONGITUDE W 90° 58' 22" ELEVATION 729'
3. SIGNAL "A" TO HAVE A BELL.
4. LOCATE U/G UTILITIES & CABLE BEFORE DIGGING.
5. CROSSING LOCATED IN PIKE COUNTY.
6. NEAREST STREET ADDRESS IS 30474 300TH ST.
7. NEAREST INTERSECTING STREET IS COUNTY HIGHWAY 2
8. DISTANCE TO NEAREST INTERSECTING STREET IS 2100 FT.
9. AVOID U.G. WATER LINE WHEN INSTALLING SHELTER.

(A) (B) (C) (D) = QUADRANT MARKERS

IN SERVICE _____ SIGNED _____ DATE

- ☐ S&E ENGINEERING COPY
- ☐ CONSTRUCTION OFFICE COPY
  RETURN TO S&E ENG. AFTER COMPLETION
- ☐ FIELD COPY
  RETURN TO CASE AFTER COMPLETION
- ☐ PROJECT ENGINEER COPY

SCALE: 1" = 20'
PROJECT #04.0185

LAYOUT

FILE No. CX0122585

DESIGNED BY:	
WJK	12-01-09
DRAWN BY:	
XRL	12-01-09
CHECKED BY:	
PEH	12-08-09
IN SERVICE:	
	- -

NORFOLK SOUTHERN

OFFICE OF ASS'T. VICE PRESIDENT COMM. & SIGNAL, ATLANTA, GA.

M.P.: DH-492.32

BARRY, IL
FLGS AT 2100E RD. (TR-148)

SPRINGFIELD-HANNIBAL DIST.

FILE No. R-

CADD or DWG. No. SFDH49232.01

SHEET No. 1 of 22

REVISION INITIALS

PROPERTY
NORFOLK SOUTHERN RAILWAY CO.

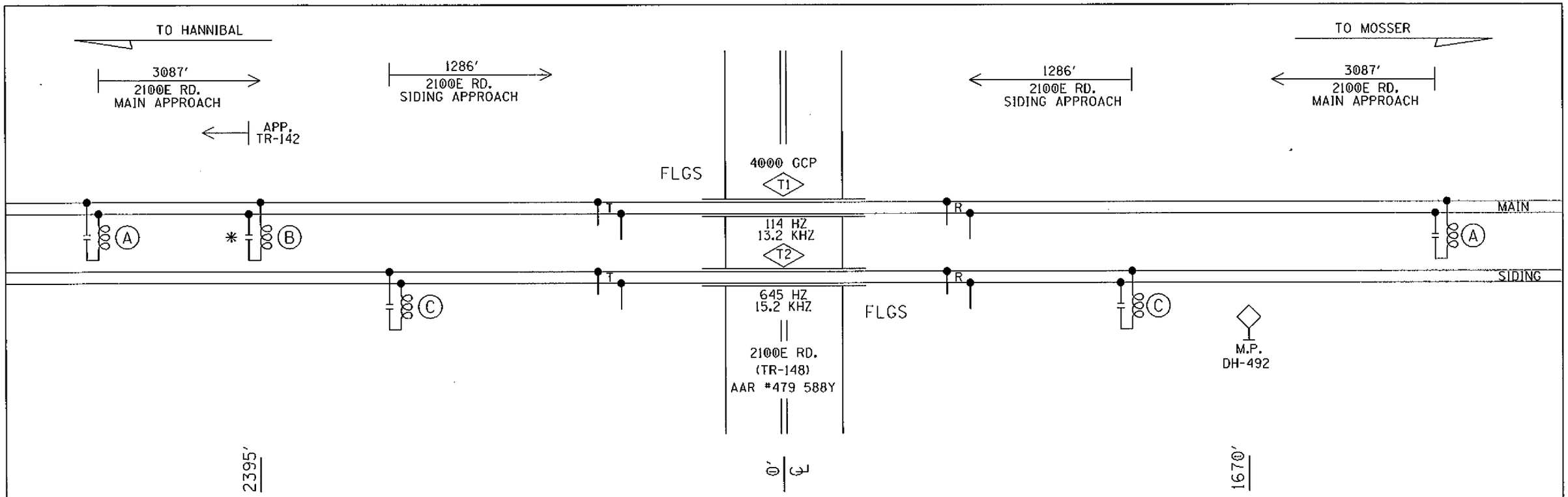

(A)- MF-NBS 62775-8621 (114HZ)

(B)- MF-NBS 62775-1543 (211HZ)

(C)- MF-NBS 62775-3497 (645HZ)

* = EXISTING

PROFILE

DESIGNED BY: WJK 12-01-09	NORFOLK SOUTHERN		
DRAWN BY: XRL 12-01-09	OFFICE OF ASS'T. VICE PRESIDENT COMM. & SIGNAL, ATLANTA, GA.	M.P.: DH-492.32	
CHECKED BY: PEH 12-08-09	BARRY, IL FLGS AT 2100E RD. (TR-148)		
IN SERVICE: - -	SPRINGFIELD-HANNIBAL DIST.	FILE No. R-	
	CADD or DWG. No. SFDH49232.02	SHEET No. 2 of 22	

REVISION INITIALS

PROPERTY
NORFOLK SOUTHERN RAILWAY CO.

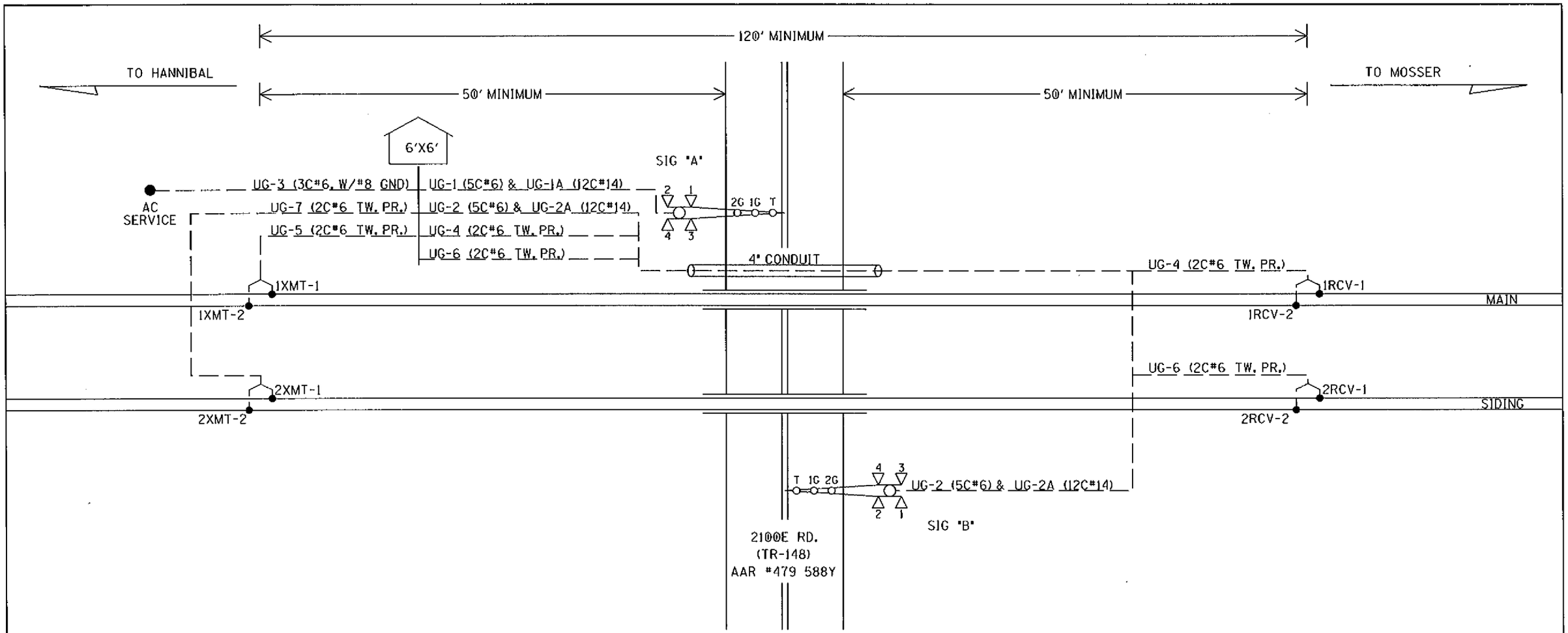

UG-1-5CUG #6
AEC
AEZ
AEB
B16-A
N16-A

UG-2-5CUG #6
BEC
BEZ
BEB
B16-B
N16-B

UG-1A-12CUG #14
AXG
NAXG
AXX
1AXX
XGP1
AMTSS
AGD
AGBX120
AGNX120
SPARE
SPARE
SPARE

UG-2A-12CUG #14
BXG
NBXG
BXX
1BXX
XGP1
XGP
BMTSS
BGD
BGBX120
BGNX120
SPARE
SPARE

UG-3-3CUG #6 W/#8 GND
BX120-A
BX120-B
NX120
GND

UG-4-TW. PR. #6
1RCV-1
1RCV-2

UG-5-TW. PR. #6
1XMT-1
1XMT-2

UG-6-TW. PR. #6
2RCV-1
2RCV-2

UG-7-TW. PR. #6
2XMT-1
2XMT-2

CABLE PLAN

DESIGNED BY: WJK 12-01-09	NORFOLK SOUTHERN		
DRAWN BY: XRL 12-01-09	OFFICE OF ASS'T. VICE PRESIDENT COMM. & SIGNAL, ATLANTA, GA.	M.P.: DH-492.32	
CHECKED BY: PEH 12-08-09	BARRY, IL FLGS AT 2100E RD. (TR-148)		
	SPRINGFIELD-HANNIBAL DIST.	FILE No. R-	
IN SERVICE: - -	CADD or DWG. No. SFDH49232.03	SHEET No. 3 of 22	

REVISION INITIALS

PROPERTY
NORFOLK SOUTHERN RAILWAY CO.

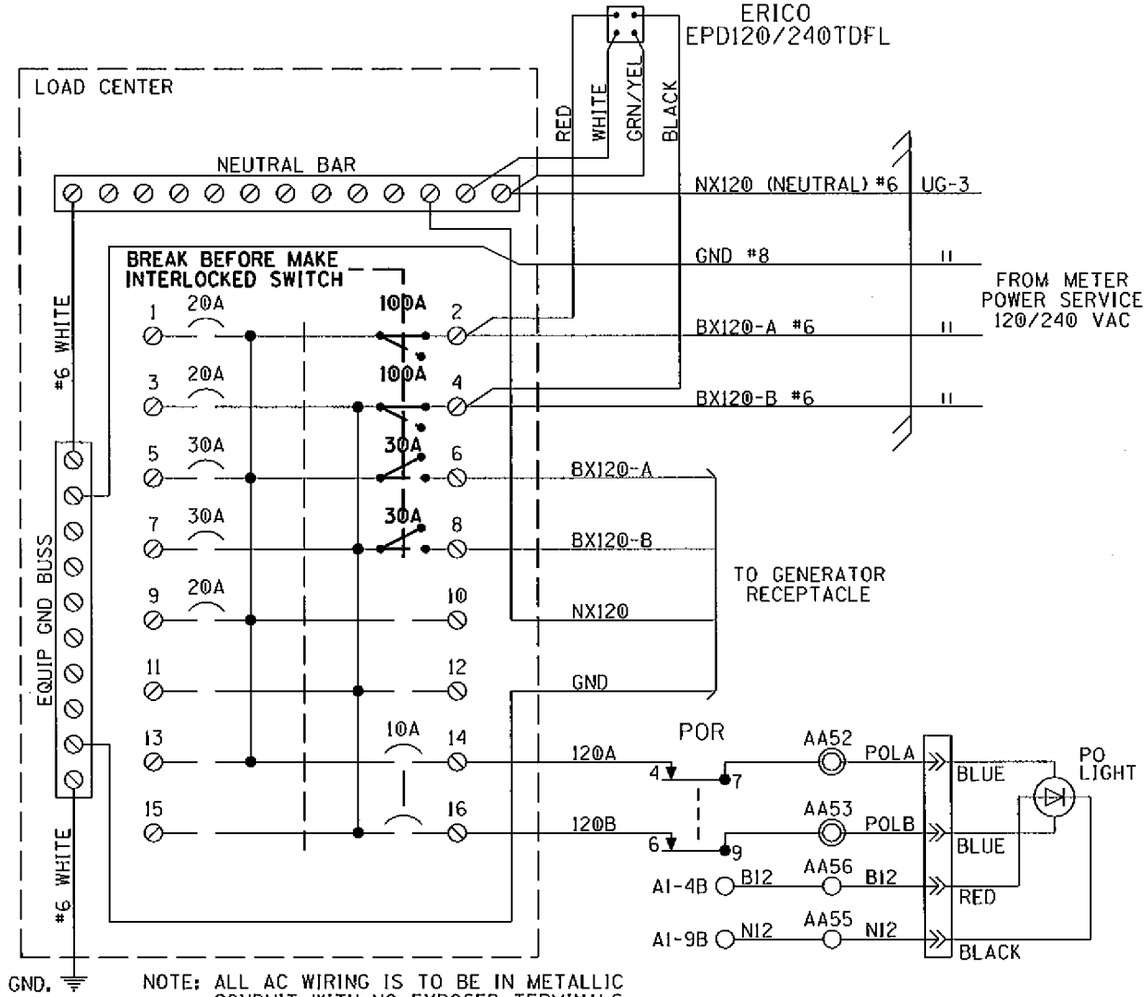

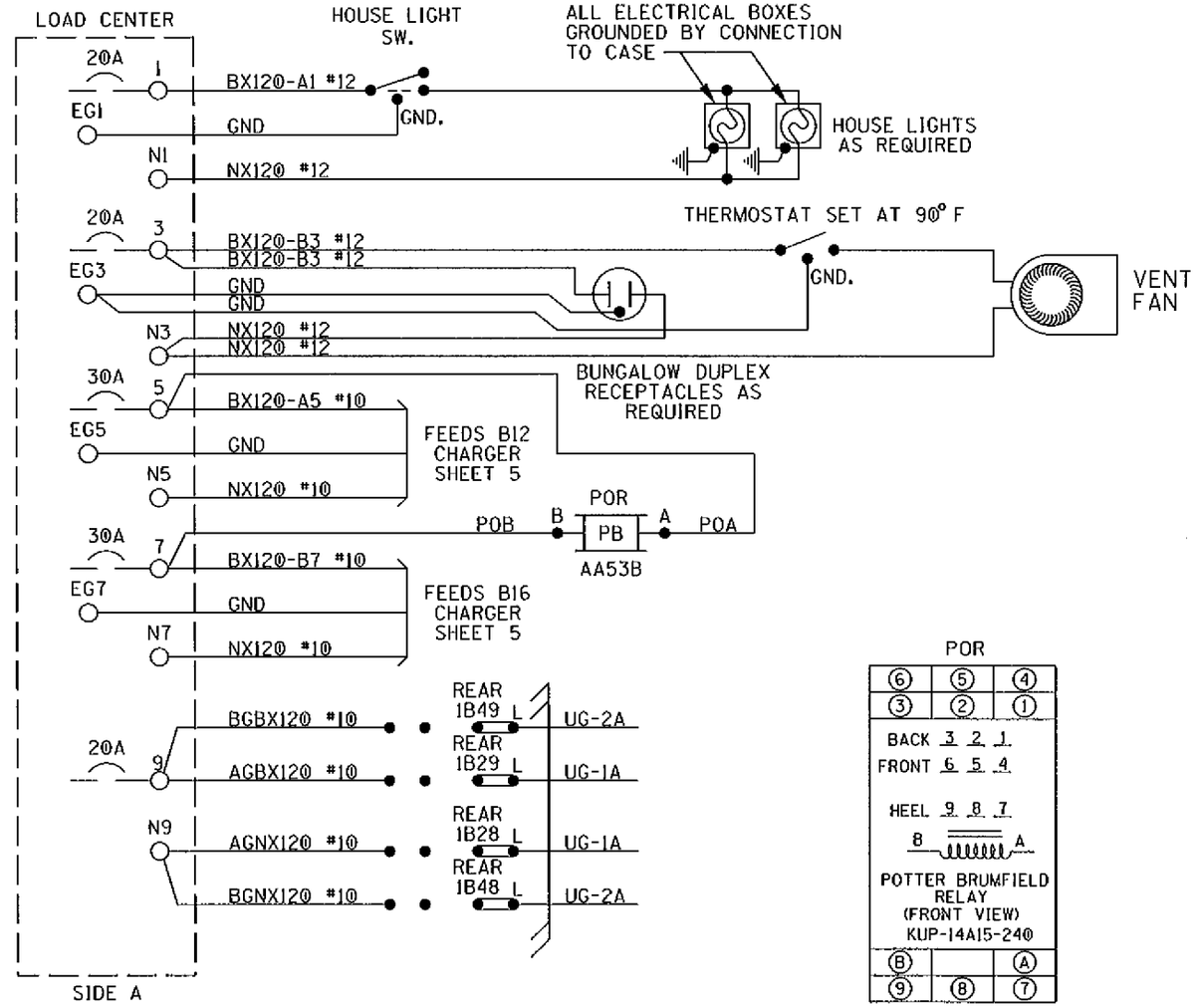

NOTE: ALL AC WIRING IS TO BE IN METALLIC CONDUIT WITH NO EXPOSED TERMINALS. ALL AC 120V AND 240V EQUIPMENT IS TO BE PROPERLY GROUNDED.

SQUARE "D" PART NUMBERS:

LOAD CENTER——Q0116L125G
10A 1P CIR BKR——Q0110
10A 2P CIR BKR——Q0210
20A 1P CIR BKR——Q0120
30A 1P CIR BKR——Q0130
30A 2P CIR BKR——Q0230
60A 2P CIR BKR——Q0260
100A 2P CIR BKR——Q02100
MECH INTERLOCK——PK4DTIM4LA

GENERATOR RECEPTACLE:
MALE CONNECTOR - NEMA L1430-FI

LOAD CENTER WIRING

DESIGNED BY: WJK 12-01-09	NORFOLK SOUTHERN		
DRAWN BY: XRL 12-01-09	OFFICE OF ASS'T. VICE PRESIDENT COMM. & SIGNAL, ATLANTA, GA.	M.P.: DH-492.32	
CHECKED BY: PEH 12-08-09	BARRY, IL FLGS AT 2100E RD. (TR-148)		
IN SERVICE: - -	SPRINGFIELD-HANNIBAL DIST.	FILE No. R-	
	CADD or DWG. No. SFDH49232.04	SHEET No. 4 of 22	

REVISION INITIALS

PROPERTY
NORFOLK SOUTHERN RAILWAY CO.

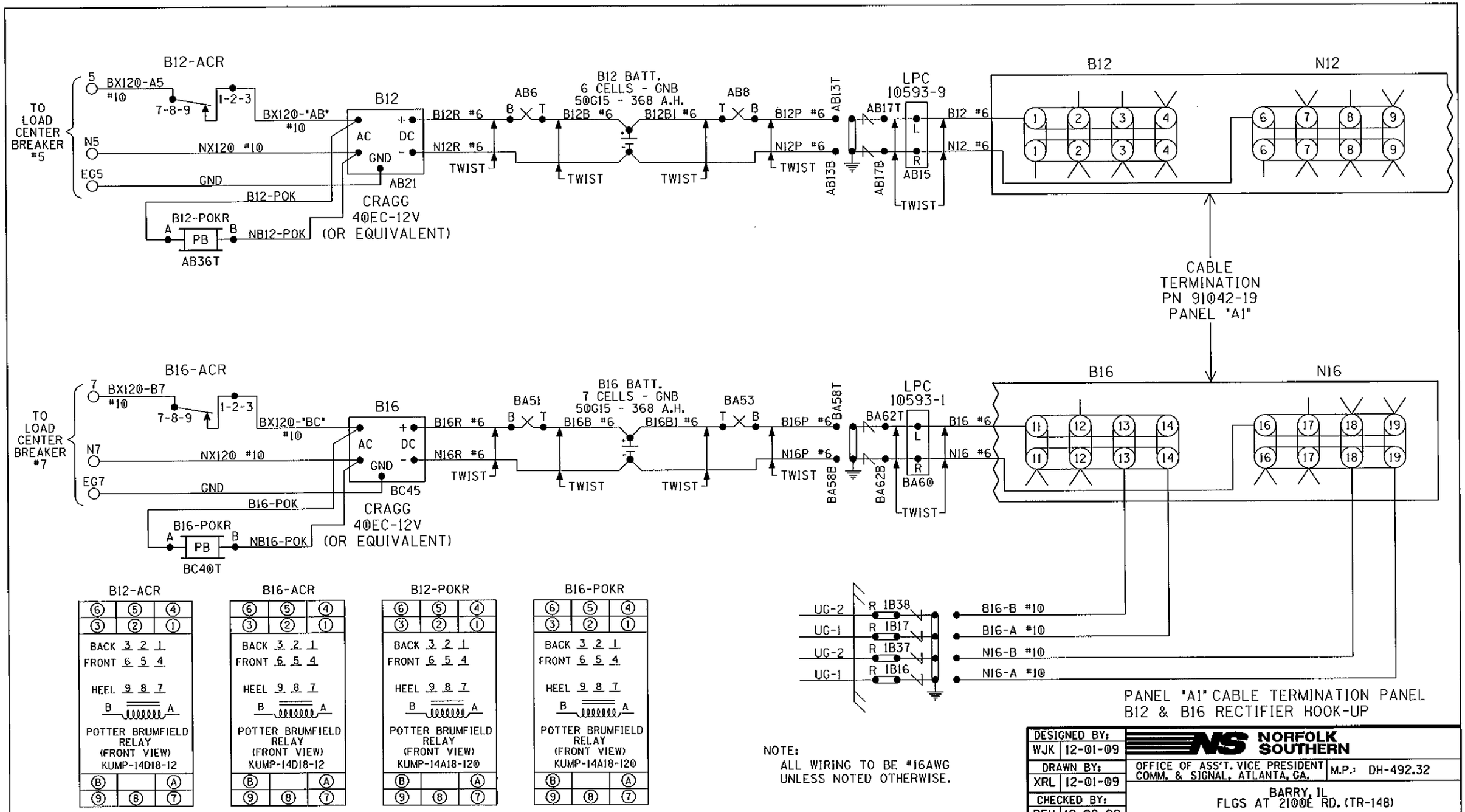

NOTE:
ALL WIRING TO BE #16AWG
UNLESS NOTED OTHERWISE.

DESIGNED BY: WJK 12-01-09	NORFOLK SOUTHERN		
DRAWN BY: XRL 12-01-09	OFFICE OF ASS'T. VICE PRESIDENT COMM. & SIGNAL, ATLANTA, GA.	M.P.: DH-492.32	
CHECKED BY: PEH 12-08-09	BARRY, IL FLGS AT 2100E RD. (TR-148)		
IN SERVICE: - -	SPRINGFIELD-HANNIBAL DIST.	FILE No. R-	
	CADD or DWG. No. SFDH49232.05	SHEET No. 5 of 22	

REVISION INITIALS

PROPERTY
NORFOLK SOUTHERN RAILWAY CO.

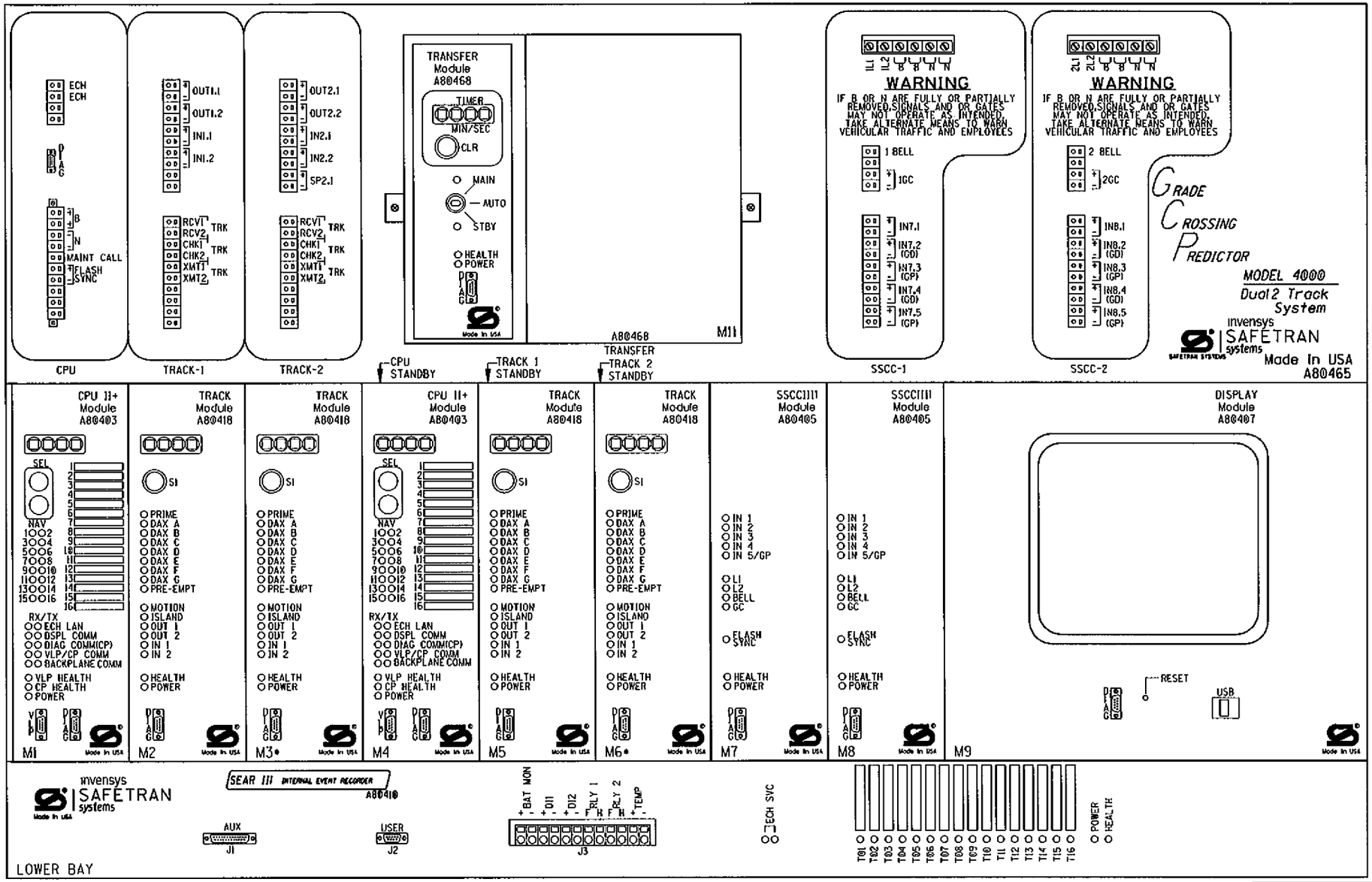

WARNING

REMOVAL OF THE SSCCIIII MODULE WILL CAUSE THE GATE(S) TO DROP BUT THE LIGHTS WILL NOT ACTIVATE

CAUTION

ASSURE CORRECT POLARITY OF THE SSCCIIII MODULE OR SEVERE DAMAGE WILL OCCUR.

ATTENTION!

ENSURE THE DISPLAY MODULE HEATER IS DISABLED. LEAVING THE DISPLAY HEATER ENABLED WILL REDUCE THE AMOUNT OF BATTERY STANDBY TIME IN THE EVENT OF AN AC POWER FAILURE.

HEATER FUNCTION IS JUMPER SELECTABLE ON THE DISPLAY MODULE BOARD.
THREE OPTIONS ARE AVAILABLE:
NORMAL LCD HTR (DEFAULT)
HI CURRENT
NO JUMPER (HEATER DISABLED)

*= MAIN AND STANDBY MAY USE R10 IN TRACK 2 SLOTS (M3 AND M6)

PANEL "A2" 4000 GCP REDUNDANT
2-TK CHASSIS AND MODULE LAYOUT

DESIGNED BY: WJK 12-01-09	NORFOLK SOUTHERN		
DRAWN BY: XRL 12-01-09	OFFICE OF ASS'T. VICE PRESIDENT COMM. & SIGNAL, ATLANTA, GA.	M.P.: DH-492.32	
CHECKED BY: PEH 12-08-09	BARRY, IL FLGS AT 2100E RD. (TR-148)		
IN SERVICE: - -	SPRINGFIELD-HANNIBAL DIST.	FILE No. R-	
	CADD or DWG. No. SFDH49232.06	SHEET No. 6 of 22	

REVISION INITIALS

PROPERTY
NORFOLK SOUTHERN RAILWAY CO.

Program Report

Location and SIN

DOT Number: 479588Y
Milepost Number: DH-492.32
Site Name: 2100E Rd

SIN: 755053505516

MCF and Template Selection

MCF Name: GCP-T6X-02-1.mcf
MCF Revision: 021
MCFCRC: 6076E435

Template = 1A:6 Trk BI

Check Numbers

Office Check No. (DT 4.6.0): 496A948D
Office Check Number: 496A948D
Config. Check Number: 171C3ABD
(Based on MCF Revision 021)

Program

BASIC: module configuration
Track 1 Slot = Track
Track 2/RIO 1 Slot = Track
Track 3 Slot = Not Used
Track 4 Slot = Not Used
Track 5/RIO 2 Slot = Not Used
Track 6/RIO 3 Slot = Not Used
SSCC-1 Slot = SSCC31
SSCC-2 Slot = SSCC31
SEAR Used = Yes

BASIC: MS/GCP operation
Track 1 : MS/GCP Operation = Yes
Track 2 : MS/GCP Operation = Yes

BASIC: Island operation
Track 1 : Island Used = Internal
Track 2 : Island Used = Internal

BASIC: preemption
Preempt Logic = No

BASIC: radio Dax links
Radio DAX link A Used = No
Radio DAX link B Used = No

BASIC: VitalComms links
VitalComms link 1 Used = No
VitalComms link 2 Used = No

PREDICTORS: track 1
Track 1 : Prime Used = Yes
Track 1 : Dax A Used = No
Track 1 : Dax B Used = No
Track 1 : Dax C Used = No
Track 1 : Dax D Used = No
Track 1 : Dax E Used = No
Track 1 : Dax F Used = No
Track 1 : Dax G Used = No

PREDICTORS: track 2
Track 2 : Prime Used = Yes
Track 2 : Dax A Used = No
Track 2 : Dax B Used = No
Track 2 : Dax C Used = No
Track 2 : Dax D Used = No
Track 2 : Dax E Used = No
Track 2 : Dax F Used = No
Track 2 : Dax G Used = No

GCP: track 1
Track 1 : GCP Freq Category = Standard
Track 1 : GCP Frequency = 114 Hz
Track 1 : Approach Distance = 3087 ft
Track 1 : Uni/BI/Sim-Bidirnl = Bidirnl
Track 1 : GCP Transmit Level = Medium
Track 1 : Island Connection = Isl1
Track 1 : Island Distance = 124 ft
Track 1 : Computed Distance = 9999 ft
Track 1 : Linearization Steps = 100

GCP: track 1 enhanced det
Track 1 : Inbound PS Sensitivity = Off
Track 1 : Speed Limiting Used = Yes
Track 1 : Outbound False Act Lvl = Normal
Track 1 : Outbound PS Timer = 20 sec
Track 1 : Trailing Switch Logic = On
Track 1 : Post Joint Detn Time = 15 sec
Track 1 : Adv Appr Predn = No
Track 1 : CancelPickup Delay = This Isl

GCP: track 1 prime
Track 1 : Prime Warning Time = 30 sec
Track 1 : Prime Offset Distance = 0 ft
Track 1 : Switch MS EZ Level = 10
Track 1 : Prime MS/GCP Mode = Pred
Track 1 : Prime Pickup Delay = 15 sec
Track 1 : Prime UAX = Not Used

GCP: track 1 pos start
Track 1 : Positive Start = Off
Track 1 : Sudden Shnt Det Used = No
Track 1 : Low EZ Detection Used = No

GCP: track 1 MS Control
Track 1 : MS/GCP CtrlIP Used = No
Track 1 : MS Sensitivity Level = 0
Track 1 : Compensation Level = 1300
Track 1 : Warn Time-Ballast Comp = High
Track 1 : Low EX Adjustment = 39
Track 1 : Bidirn Dax Passthru = No
Track 1 : False Act on Train Stop = No
Track 1 : EX Limiting Used = Yes
Track 1 : EZ Correction Used = Yes

GCP: track 2
Track 2 : GCP Freq Category = Standard
Track 2 : GCP Frequency = 645 Hz
Track 2 : Approach Distance = 1286 ft
Track 2 : Uni/BI/Sim-Bidirnl = Bidirnl
Track 2 : GCP Transmit Level = Medium
Track 2 : Island Connection = Isl2
Track 2 : Island Distance = 124 ft
Track 2 : Computed Distance = 9999 ft
Track 2 : Linearization Steps = 100

GCP: track 2 enhanced det
Track 2 : Inbound PS Sensitivity = Off
Track 2 : Speed Limiting Used = Yes
Track 2 : Outbound False Act Lvl = Normal
Track 2 : Outbound PS Timer = 20 sec
Track 2 : Trailing Switch Logic = On
Track 2 : Post Joint Detn Time = 15 sec
Track 2 : Adv Appr Predn = No
Track 2 : CancelPickup Delay = This Isl

GCP: track 2 prime
Track 2 : Prime Warning Time = 30 sec
Track 2 : Prime Offset Distance = 0 ft
Track 2 : Switch MS EZ Level = 10
Track 2 : Prime MS/GCP Mode = Pred
Track 2 : Prime Pickup Delay = 15 sec
Track 2 : Prime UAX = Not Used

GCP: track 2 pos start
Track 2 : Positive Start = Off
Track 2 : Sudden Shnt Det Used = No
Track 2 : Low EZ Detection Used = No

GCP: track 2 MS Control
Track 2 : MS/GCP CtrlIP Used = No
Track 2 : MS Sensitivity Level = 0
Track 2 : Compensation Level = 1300
Track 2 : Warn Time-Ballast Comp = High
Track 2 : Low EX Adjustment = 39
Track 2 : Bidirn Dax Passthru = No
Track 2 : False Act on Train Stop = No
Track 2 : EX Limiting Used = Yes
Track 2 : EZ Correction Used = Yes

ISLAND: track 1
Track 1 : IslFrequency = 13.2 kHz
Track 1 : Pickup Delay (2s +) = 0 sec
Track 1 : IslEnable IP Used = No

ISLAND: track 2
Track 2 : IslFrequency = 15.2 kHz
Track 2 : Pickup Delay (2s +) = 0 sec
Track 2 : IslEnable IP Used = No

AND: track Anding
AND 1 XR Used = Yes
AND 2 Used = No
AND 3 Used = No
AND 4 Used = No
AND 5 Used = No
AND 6 Used = No
AND 7 Used = No
AND 8 Used = No

AND: AND 1 XR
AND 1 XR Track 1 = Prime
AND 1 XR Track 2 = Prime
AND 1 Enable Used = Yes
And 1 Enable Pickup = 5 sec
AND 1 Enable Drop = 0 sec
AND 1 Wrap Used = No

ADVANCED: MS restart
MS/GCP Restart Used = No

ADVANCED: out of service
OOS Control = Display+OOS IPs
OOS Timeout = Yes
OOS Timeout = 1 hrs

ADVANCED: out of service 2
T1 OOS Control = OOS Input 1
T2 OOS Control = OOS Input 1

ADVANCED: track wrap circuits
Wrap LOS Timer = 5 sec
Track 1 Wrap Used = No
Track 2 Wrap Used = No

ADVANCED: trk 1 overrides
Track 1 : AllPredictors Override Used = No

ADVANCED: trk 2 overrides
Track 2 : AllPredictors Override Used = No

ADVANCED: OR logic
OR 1 Used = No
OR 2 Used = No
OR 3 Used = No
OR 4 Used = No

ADVANCED: internal I/O 1
Pass Thrus = No
Int.1 Sets = Not Used
Int.1 Set by = Not Used
Int.2 Sets = Not Used
Int.2 Set by = Not Used
Int.3 Sets = Not Used
Int.3 Set by = Not Used
Int.4 Sets = Not Used
Int.4 Set by = Not Used

ADVANCED: internal I/O 2
Int.5 Sets = Not Used
Int.5 Set by = Not Used
Int.6 Sets = Not Used
Int.6 Set by = Not Used
Int.7 Sets = Not Used
Int.7 Set by = Not Used
Int.8 Sets = Not Used
Int.8 Set by = Not Used

ADVANCED: internal I/O 3
Int.9 Sets = Not Used
Int.9 Set by = Not Used
Int.10 Sets = Not Used
Int.10 Set by = Not Used
Int.11 Sets = Not Used
Int.11 Set by = Not Used
Int.12 Sets = Not Used
Int.12 Set by = Not Used

ADVANCED: internal I/O 4
Int.13 Sets = Not Used
Int.13 Set by = Not Used
Int.14 Sets = Not Used
Int.14 Set by = Not Used
Int.15 Sets = Not Used
Int.15 Set by = Not Used
Int.16 Sets = Not Used
Int.16 Set by = Not Used

ADVANCED: site options
Daylight Savings = On
Units = Standard
Maint CallRpt IP Used = No
Emergency Activate IP = No
EZ/EX Logging = Change
EZ/EX Point Change = 3

SSCC
Gates Used = Yes
SSCC1+2 GPs Coupled = Yes
Min Activation = 0 sec
Rmt Activation Cancel = 2 min
BellOn Gate Rising = No
Mute BellOn Gate Down = No
SSCCIV Controller Used = No

4000 GCP PROGRAMMING SETUP

DESIGNED BY: WJK 12-01-09	NORFOLK SOUTHERN		
DRAWN BY: XRL 12-01-09	OFFICE OF ASS'T. VICE PRESIDENT COMM. & SIGNAL, ATLANTA, GA.	M.P.: DH-492.32	
CHECKED BY: PEH 12-08-09	BARRY, IL FLGS AT 2100E RD. (TR-148)		
IN SERVICE: - -	SPRINGFIELD-HANNIBAL DIST.	FILE No. R-	
	CADD or DWG. No. SFDH49232.07	SHEET No. 7 of 22	

REVISION INITIALS

PROPERTY
NORFOLK SOUTHERN RAILWAY CO.

SSCC: 1
SSCC-1 Activation = AND 1 XR
SSCC-1 Gate Delay = 4 sec
SSCC-1 Number of GPs = 1
SSCC-1 Number of GDs = 2
SSCC 1 : Flash Rate = 40
SSCC 1 : Low Battery Detection = No
SSCC 1 : Flash Sync = master
SSCC 1 : Invert Gate Output = No
SSCC 1 : Lamp Neutral Test = On
Aux-1 Xng Ctrl Used = No

SSCC: 2
SSCC-2 Activation = AND 1 XR
SSCC-2 Gate Delay = 4 sec
SSCC-2 Number of GPs = 0
SSCC-2 Number of GDs = 0
SSCC 2 : Flash Rate = 40
SSCC 2 : Low Battery Detection = No
SSCC 2 : Flash Sync = slave
SSCC 2 : Invert Gate Output = No
SSCC 2 : Lamp Neutral Test = On
Aux-2 Xng Ctrl Used = No

OUTPUT: assignment page 1
OUT 1.1 = Not Used
OUT 1.2 = Not Used
OUT 2.1 = Not Used
OUT 2.2 = Not Used

INPUT: assignment page 1
IN 1.1 = Not Used
IN 1.2 = Not Used
IN 2.1 = Not Used
IN 2.2 = Not Used

IO: assignment SSCC
OUT GC 1 = Gate Output 1
OUT GC 2 = Gate Output 2
IN 7.1 = Not Used
IN 7.2 = GD 1.2
IN 7.3 = AND 1 XR Enable
IN 7.4 = GD 1.1
IN 7.5 = GP 1.1
IN 8.1 = Not Used
IN 8.2 = Out Of Service IP 1
IN 8.3 = Not Used
IN 8.4 = Not Used
IN 8.5 = Not Used

SEAR
SEAR Subnode = 3
DI 1 = Gnd Flt Tester 1
DI 2 = Not Used
Rly 1 = Ground Fault Test
Rly 2 = AC Control

SEAR: Inputs
SP 2.1 = POK 1
SP 3.1 = Not Used
SP 4.1 = Not Used
SP 5.1 = Not Used
SP 6.1 = Not Used

SEAR: slot 1-4 Inputs
IN 1.1 = Not Used
IN 1.2 = Not Used
IN 2.1 = Not Used
IN 2.2 = Not Used
IN 3.1 = Not Used
IN 3.2 = Not Used
IN 4.1 = Not Used
IN 4.2 = Not Used

SEAR: Inputs slot 5
IN 5.1 = Not Used
IN 5.2 = Not Used

SEAR: Inputs slot 6
IN 6.1 = Not Used
IN 6.2 = Not Used

SEAR: slot 7-8 Inputs
IN 7.1 = TSS 1
IN 8.1 = TSS 2
IN 8.3 = POK 2
IN 8.4 = Not Used
IN 8.5 = Not Used

SITE: programming
Radio Subnode = 1
Field Password = Off
Low Battery Enabled = Off

Configuration Package File

Filename: sfdh49232.pac

4000 GCP PROGRAMMING SETUP

DESIGNED BY: WJK 12-01-09	NORFOLK SOUTHERN		
DRAWN BY: XRL 12-01-09	OFFICE OF ASS'T. VICE PRESIDENT COMM. & SIGNAL, ATLANTA, GA.	M.P.: DH-492.32	
CHECKED BY: PEH 12-08-09	BARRY, IL FLGS AT 2100E RD. (TR-148)		
IN SERVICE: - -	SPRINGFIELD-HANNIBAL DIST.	FILE No. R-	
	CADD or DWG. No. SFDH49232.08	SHEET No. 8 of 22	

REVISION INITIALS

PROPERTY
NORFOLK SOUTHERN RAILWAY CO.

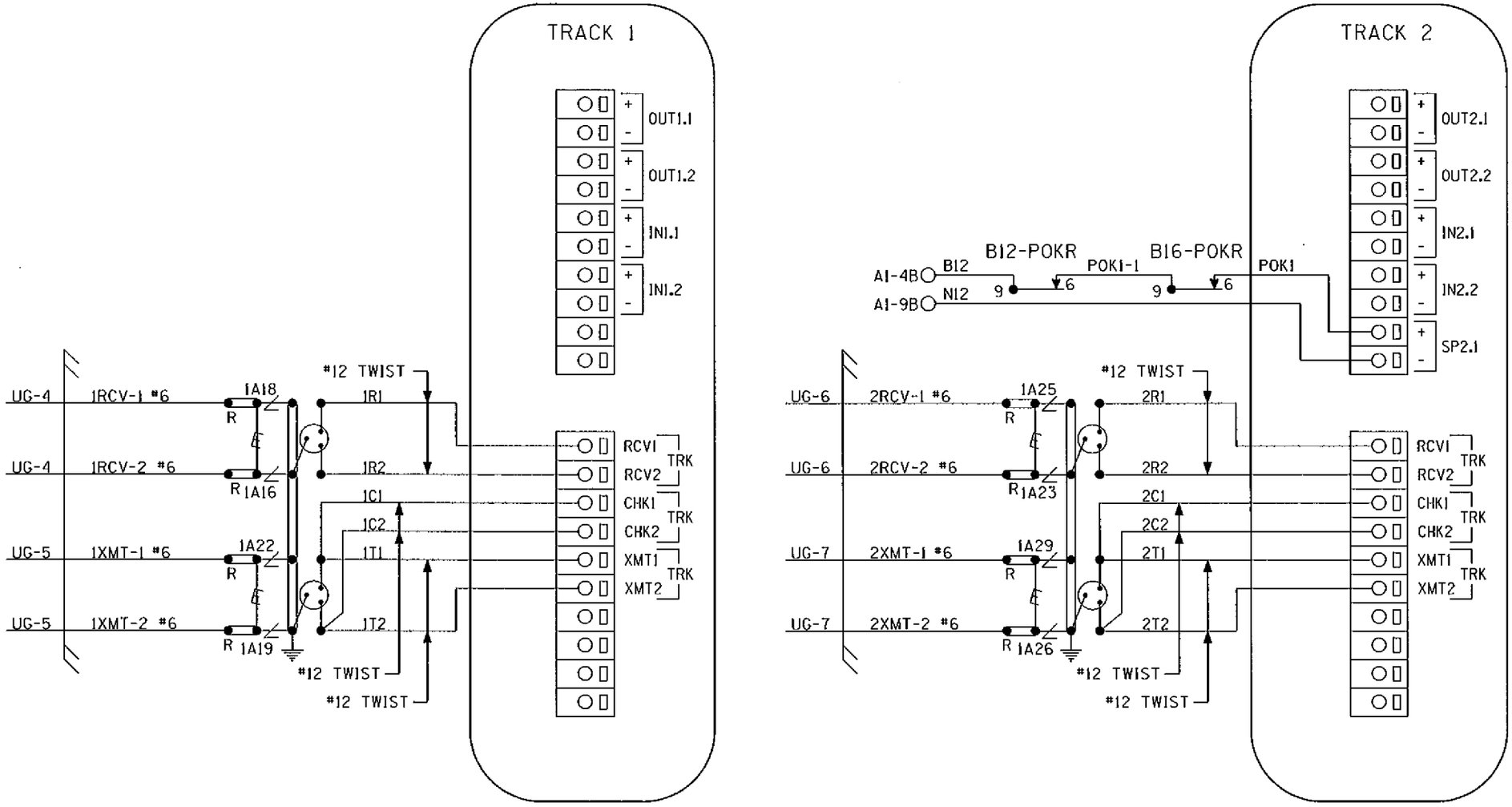

PANEL "A2" CONNECTORS FOR MODULES (A80418)

NOTE:
ALL WIRING TO BE #16AWG
UNLESS NOTED OTHERWISE.

DESIGNED BY: WJK 12-01-09	NORFOLK SOUTHERN		
DRAWN BY: XRL 12-01-09	OFFICE OF ASS'T. VICE PRESIDENT COMM. & SIGNAL, ATLANTA, GA.	M.P.: DH-492.32	
CHECKED BY: PEH 12-08-09	BARRY, IL FLGS AT 2100E RD. (TR-148)		
IN SERVICE: - -	SPRINGFIELD-HANNIBAL DIST.	FILE No. R-	
	CADD or DWG. No. SFDH49232.09	SHEET No. 9 of 22	

REVISION INITIALS

PROPERTY
NORFOLK SOUTHERN RAILWAY CO.

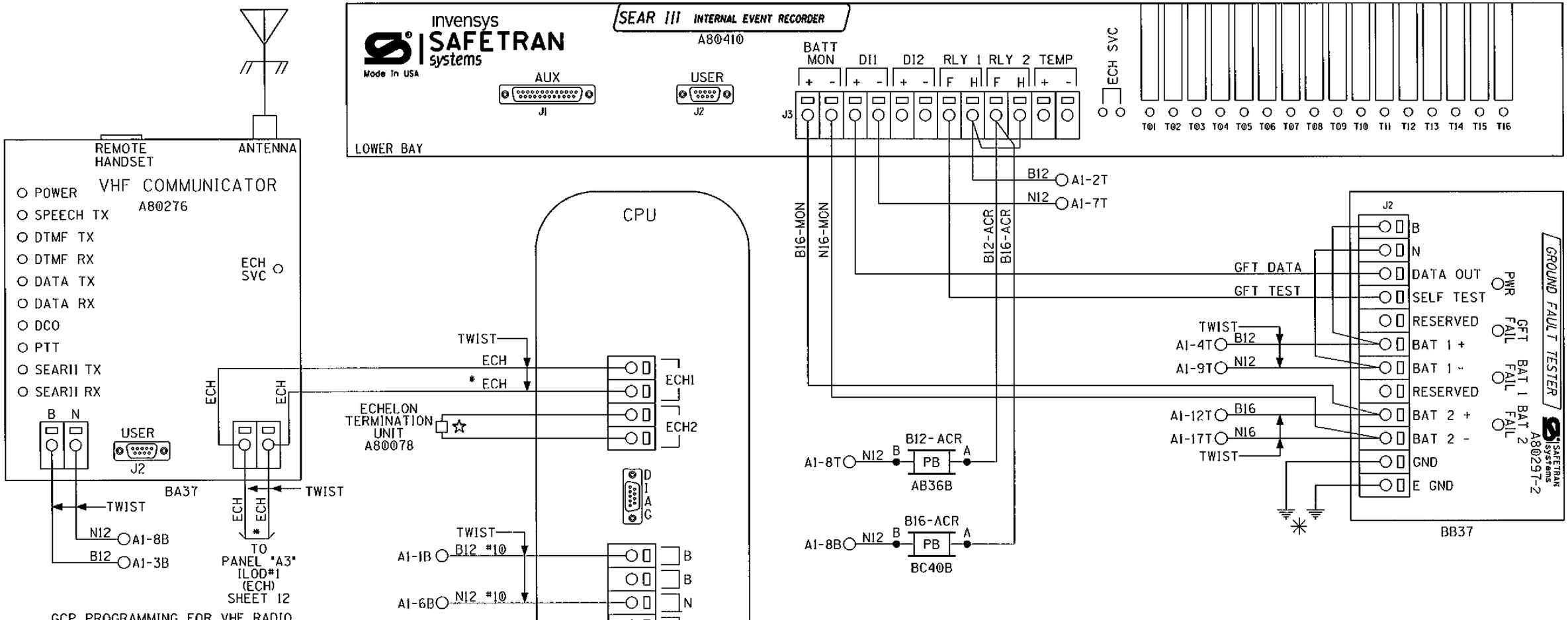

GCP PROGRAMMING FOR VHF RADIO

REMOTE DTMF CROSSING ACTIVATION (ACTIVATES ENTIRE CROSSING)	
TO ACTIVATE PRESS:	588*
TO DE-ACTIVATE PRESS:	588*
(ACTIVATION WILL TIME OUT AFTER 60 SEC.)	
REMOTE DTMF LIGHTING ACTIVATION (ACTIVATES FLASHING LIGHTS ONLY)	
TO ACTIVATE PRESS:	5881*
TO DE-ACTIVATE PRESS:	5881*
(ACTIVATION WILL TIME OUT AFTER 60 SEC.)	

NOTES:

ALL WIRING TO BE #16AWG UNLESS NOTED OTHERWISE.

* = ECHELON CONNECTIONS NOT TO EXCEED 53' IN LENGTH AND TOTAL LENGTH NOT TO EXCEED 430' WITH A MAXIMUM OF 8 NODES, RECOMMEND USE BELDEN WIRE CABLE #8461 OR EQUIVALENT.

✳ = CONNECT "E GND 1" AND "E GND 2" TO INDEPENDENT GROUND POINTS ON SIDE A AND SIDE B.

☆ = A80078 ECHELON TERMINATION UNIT TO TERMINATE ECHELON NETWORK.

PANEL "A2" CONNECTORS FOR CPU MODULE (A80403)
PANEL "A2" SEAR III (A80410), GFT (A80297-2) AND VHF (A80276) HOOK-UPS

DESIGNED BY: WJK 12-01-09	NORFOLK SOUTHERN		
DRAWN BY: XRL 12-01-09	OFFICE OF ASS'T. VICE PRESIDENT COMM. & SIGNAL, ATLANTA, GA.	M.P.: DH-492.32	
CHECKED BY: PEH 12-08-09	BARRY, IL FLGS AT 2100E RD. (TR-148)		
IN SERVICE: - -	SPRINGFIELD-HANNIBAL DIST.	FILE No. R-	
	CADD or DWG. No. SFDH49232.10	SHEET No. 10 of 22	

REVISION INITIALS

PROPERTY NORFOLK SOUTHERN RAILWAY CO.

TO CONFIGURE SEAR III PRESS SITE SETUP KEY.
USE ARROW KEYS TO MAKE SELECTION.
PRESS ENTER AFTER SELECTION HAS BEEN MADE.

	SITE SET UP PROCEDURE	
	FUNCTION	LED DISPLAY
	DATE/TIME	
	AUTOMATIC DST ADJUSTMENT	YES
	TIME ZONE	EST
	SITE NAME	2100E RD.
	MILEPOST	DH-492.32
	DOT #	479588Y
	TESTER TYPE	CROSSING
	DATE FORMAT	MM-DD-YYYY
	TEMP FORMAT	FAHRENHEIT
	INDICATE HOLD (SEC)	0
	INDICATE REFRESH (SEC)	60
	SITE ATCS	7.550.535.055.03.01
	SITE TYPE	NO COMMUNICATION
***	OFFICE ATCS ADDRESS	2.550.00.0000
***	PRIMARY HOP ADDR	7.RRR.LLL.GGG.XX.XX
***	BACKUP HOP ADDR 1	7.RRR.LLL.GGG.XX.XX
***	BACKUP HOP ADDR 2	7.RRR.LLL.GGG.XX.XX
***	POLL ID	1
***	MODE	GEN/ATCS
***	WAMS XID	DISABLED
***	OFFICE COMM DEVICE	MCM (ECHELON)
***	RADIO ATCS ADDR	7.RRR.LLL.GGG.01.01
***	PHONE #	(OFFICE NUMBER)
***	INIT STRING	
***	FIELD COMM	NONE
****	USER PORT	BAUD 57600, N, 8, 1, NONE
****	AUX PORT	BAUD 9600, N, 8, 1, NONE

VERIFY NUMBER OF BULBS: SENSOR #1	
CURR 1: LAMP SET UP	4 BULBS
CURR 2: LAMP SET UP	4 BULBS

VERIFY NUMBER OF BULBS: SENSOR #2	
CURR 1: LAMP SET UP	4 BULBS
CURR 2: LAMP SET UP	4 BULBS

	CONTROL SYSTEM CONFIGURATION MENU QUESTIONS	
	THE QUESTION	SELECT FROM MENU OPTION
	RESET NAMES AND MODULES?	YES
	RAILROAD NUMBER	550
	CROSSING CONFIGURATION	NORMAL
	AND 1 USED AS XR?	YES
	AND 2 USED AS XR?	NO
	AND 3 USED AS XR?	NO
	AND 4 USED AS XR?	NO
	AND 5 USED AS XR?	NO
	AND 6 USED AS XR?	NO
	AND 7 USED AS XR?	NO
	AND 8 USED AS XR?	NO
*	XR CONTROLLED BY FOREIGN RR	
	ENTRANCE GATES	2
*	GATES CONTROLLED BY FOREIGN RR	
	GATE POSITION FAIL TIME (SECONDS)	20
	BATTERY BANKS	2
	BATTERY MON USED	YES
	INTERNAL CROSSING CONTROLLERS	2
	EXTERNAL CROSSING CONTROLLERS	0
	VHF COMMUNICATOR	YES
	DTMF ACTIVATION	YES
*****	ACTIVATION CODE	588
	ACTIVATION TIMEOUT (SECONDS)	60
	ILOD MODULES	2
	ANY LED BULBS USED	NO
	AUTO INSPECTIONS	NO
	BELL SENSORS	1
**	BELL SENSOR TSS1	YES
**	BELL SENSOR TSS2	NO
**	BELL SENSOR TSS3	NO
**	BELL SENSOR TSS4	NO
**	BELL SENSOR TSS5	NO
**	BELL SENSOR TSS6	NO
**	BELL SENSOR TSS7	NO
**	BELL SENSOR TSS8	NO

CONTROL SYSTEM CONFIGURATION MENU QUESTIONS (CONT.)	
BELL ON	GATES LOWERING
GFT'S	YES
BATTERIES ON GFT1	2
GATE TIP SENSORS	YES
RTU	NO
VHF VOICE CHANNEL	161.475 MHZ
VHF DATA CHANNEL	NONE
USE CELL MODEM NON-CRITICAL FEATURE	NO
FULL APPROACH MOVES ALARM	ACTIVATE

PROGRAM MENU QUESTIONS	PROGRAM
EDIT DIGITAL INPUTS	NO
EDIT BATTERIES	NO
EDIT RELAYS	NO
EDIT INDICATOR LEDS	NO
EDIT TEST LEDS	NO
EDIT ILOD SENSORS	NO
EDIT VHF SETTINGS	NO
GCP4K ATCS SUBNODE	16

NOTES:

* = DISPLAYED IF CROSSING CONFIGURATION IS SPLIT GATE

** = OPTIONS: IF BELL SENSOR = 0, THEN BELL FIELDS ARE NOT USED.

*** = IF SITE TYPE = NO COMMUNICATION, THEN THESE OPTIONS ARE NOT DISPLAYED

**** = THESE SETTINGS SHOULD BE LEFT AT THE DEFAULT SETTING.

***** = USE LAST 3 NUMBERS FROM DOT NUMBER

SEAR III PROGRAMMING SETUP

DESIGNED BY: WJK 12-01-09	NORFOLK SOUTHERN		
DRAWN BY: XRL 12-01-09	OFFICE OF ASS'T. VICE PRESIDENT COMM. & SIGNAL, ATLANTA, GA.	M.P.: DH-492.32	
CHECKED BY: PEH 12-08-09	BARRY, IL FLGS AT 2100E RD. (TR-148)		
IN SERVICE: - -	SPRINGFIELD-HANNIBAL DIST.	FILE No. R-	
	CADD or DWG. No. SFDH49232.11	SHEET No. 11 of 22	

REVISION INITIALS

PROPERTY
NORFOLK SOUTHERN RAILWAY CO.

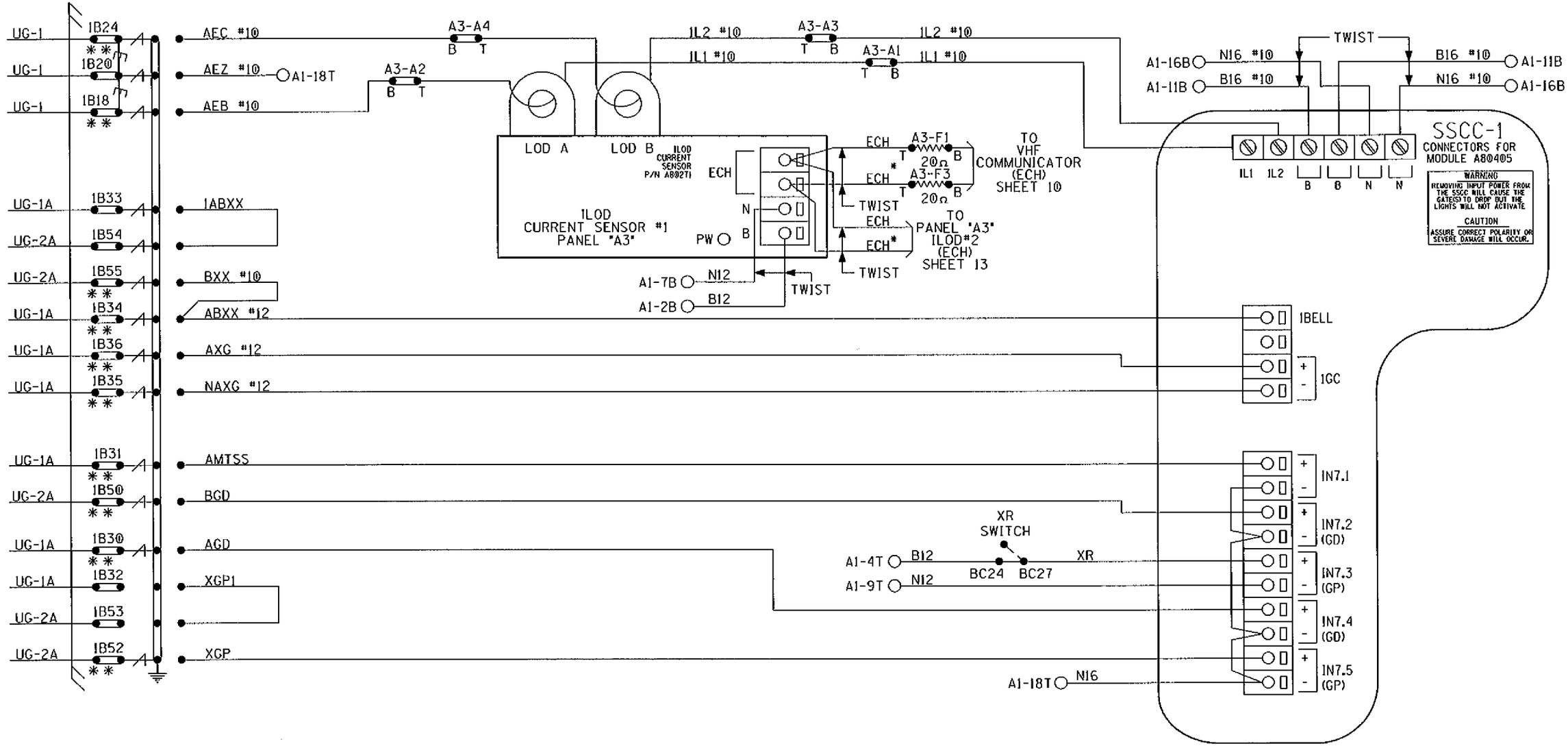

NOTES: ALL WIRING TO BE #16AWG UNLESS NOTED OTHERWISE.

* = ECHELON CONNECTIONS NOT TO EXCEED 53' IN LENGTH AND TOTAL LENGTH NOT TO EXCEED 430' WITH A MAXIMUM OF 8 NODES, RECOMMEND USE BELDEN WIRE CABLE #8461 OR EQUIVALENT.

** = TEST LINKS MUST BE OPENED TEMPORARILY FOR NEW COLD START OF NEW OR REPLACEMENT SSCC MODULE AND CAN ONLY BE CLOSED IN SEQUENCE WITH MFR. INSTRUCTIONS: SECTION 8.8 OF THE GCP 4000 REFERENCE MANUAL.

PANEL "A2" CONNECTORS FOR SSCC#1 MODULE (A80405)
PANEL "A3" ILOD#1 (A80271) HOOK-UP

DESIGNED BY: WJK 12-01-09	NORFOLK SOUTHERN		
DRAWN BY: XRL 12-01-09	OFFICE OF ASS'T. VICE PRESIDENT COMM. & SIGNAL, ATLANTA, GA.	M.P.: DH-492.32	
CHECKED BY: PEH 12-08-09	BARRY, IL FLGS AT 2100E RD. (TR-148)		
IN SERVICE: - -	SPRINGFIELD-HANNIBAL DIST.	FILE No. R-	
	CADD or DWG. No. SFDH49232.12	SHEET No. 12 of 22	

REVISION INITIALS									

PROPERTY
NORFOLK SOUTHERN RAILWAY CO.

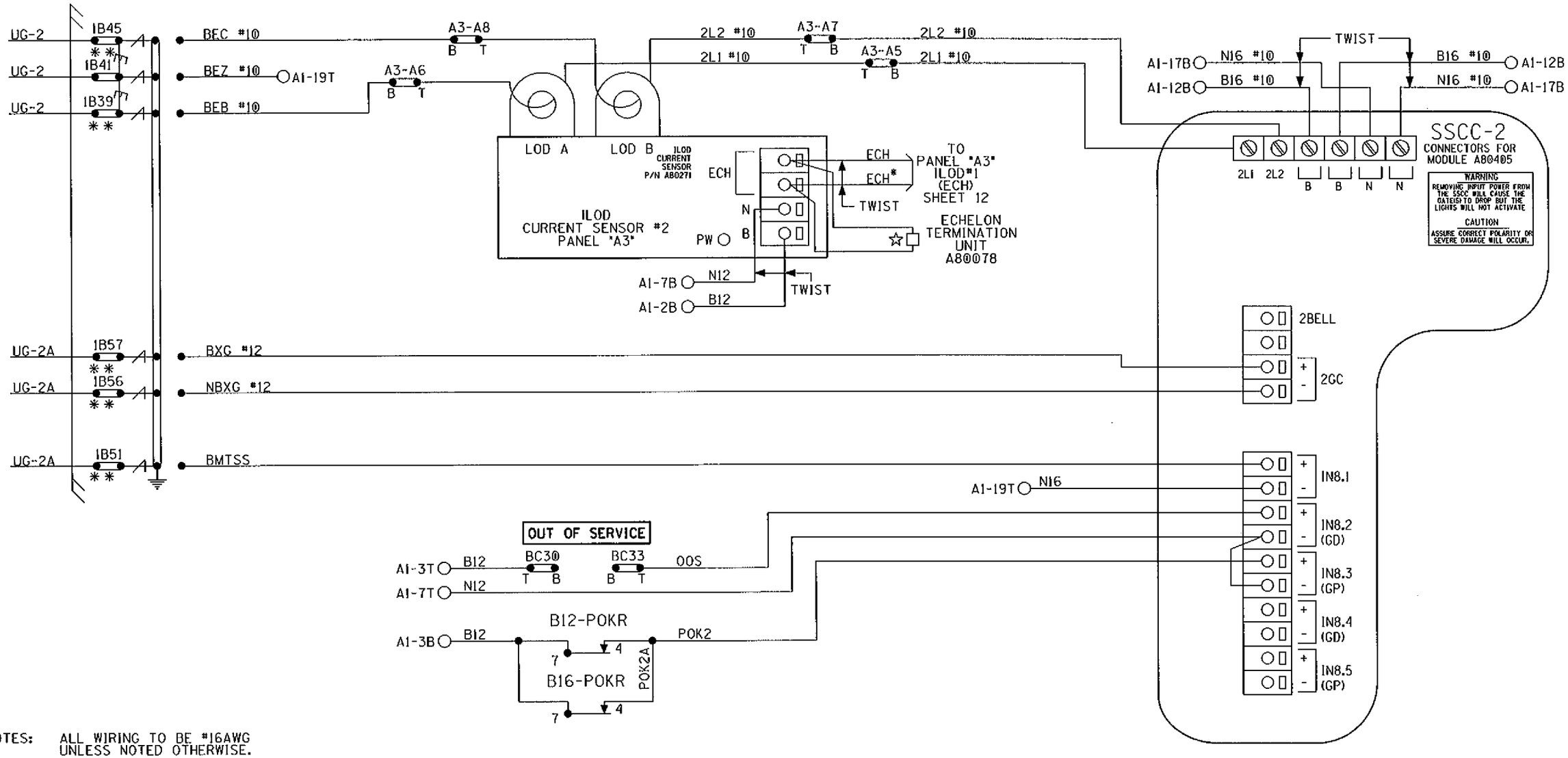

NOTES: ALL WIRING TO BE #16AWG UNLESS NOTED OTHERWISE.

* = ECHELON CONNECTIONS NOT TO EXCEED 53' IN LENGTH AND TOTAL LENGTH NOT TO EXCEED 430' WITH A MAXIMUM OF 8 NODES, RECOMMEND USE BELDEN WIRE CABLE #8461 OR EQUIVALENT.

** = TEST LINKS MUST BE OPENED TEMPORARILY FOR NEW COLD START OF NEW OR REPLACEMENT SSCC MODULE AND CAN ONLY BE CLOSED IN SEQUENCE WITH MFR. INSTRUCTIONS; SECTION 8.8 OF THE GCP 4000 REFERENCE MANUAL.

☆ = A80078 ECHELON TERMINATION UNIT TO TERMINATE ECHELON NETWORK.

PANEL "A2" CONNECTORS FOR SSCC#2 MODULE (A80405)
PANEL "A3" ILOD#2 (A80271) HOOK-UP

DESIGNED BY: WJK 12-01-09	NORFOLK SOUTHERN	
DRAWN BY: XRL 12-01-09	OFFICE OF ASS'T. VICE PRESIDENT COMM. & SIGNAL, ATLANTA, GA.	M.P.: DH-492.32
CHECKED BY: PEH 12-08-09	BARRY, IL FLGS AT 2100E RD. (TR-148)	
IN SERVICE: - -	SPRINGFIELD-HANNIBAL DIST.	FILE No. R-
	CADD or DWG. No. SFDH49232.13	SHEET No. 13 of 22

REVISION INITIALS

PROPERTY NORFOLK SOUTHERN RAILWAY CO.

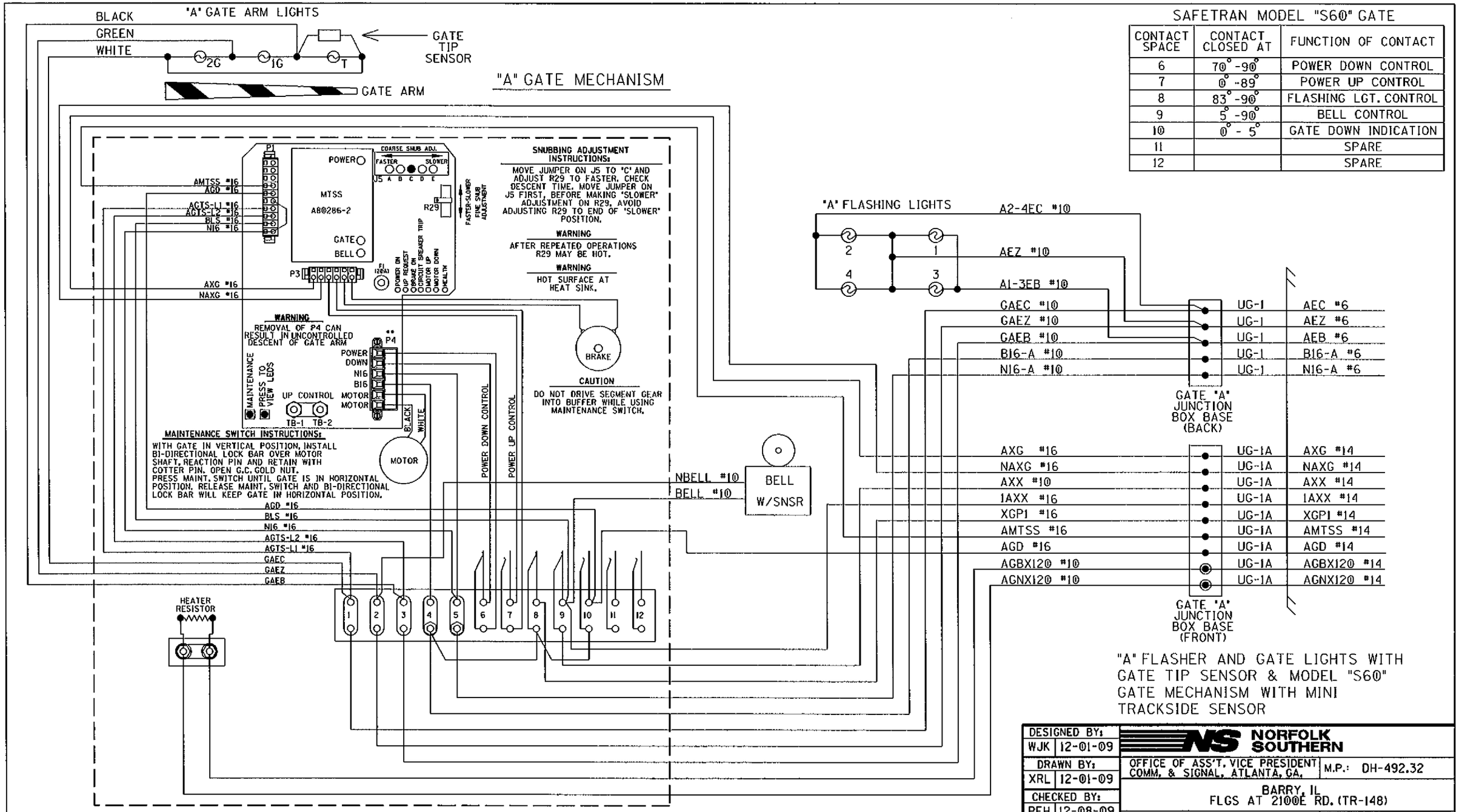

SAFETRAN MODEL "S60" GATE

CONTACT SPACE	CONTACT CLOSED AT	FUNCTION OF CONTACT
6	70°-90°	POWER DOWN CONTROL
7	0°-89°	POWER UP CONTROL
8	83°-90°	FLASHING LGT. CONTROL
9	5°-90°	BELL CONTROL
10	0°-5°	GATE DOWN INDICATION
11		SPARE
12		SPARE

"A" FLASHER AND GATE LIGHTS WITH GATE TIP SENSOR & MODEL "S60" GATE MECHANISM WITH MINI TRACKSIDE SENSOR

DESIGNED BY: WJK 12-01-09	NORFOLK SOUTHERN		
DRAWN BY: XRL 12-01-09	OFFICE OF ASS'T. VICE PRESIDENT COMM. & SIGNAL, ATLANTA, GA.	M.P.: DH-492.32	
CHECKED BY: PEH 12-08-09	BARRY, IL FLGS AT 2100E RD. (TR-148)		
IN SERVICE: - -	SPRINGFIELD-HANNIBAL DIST.	FILE No. R-	
	CADD or DWG. No. SFDH49232.14	SHEET No. 14 of 22	

REVISION INITIALS

PROPERTY
NORFOLK SOUTHERN RAILWAY CO.

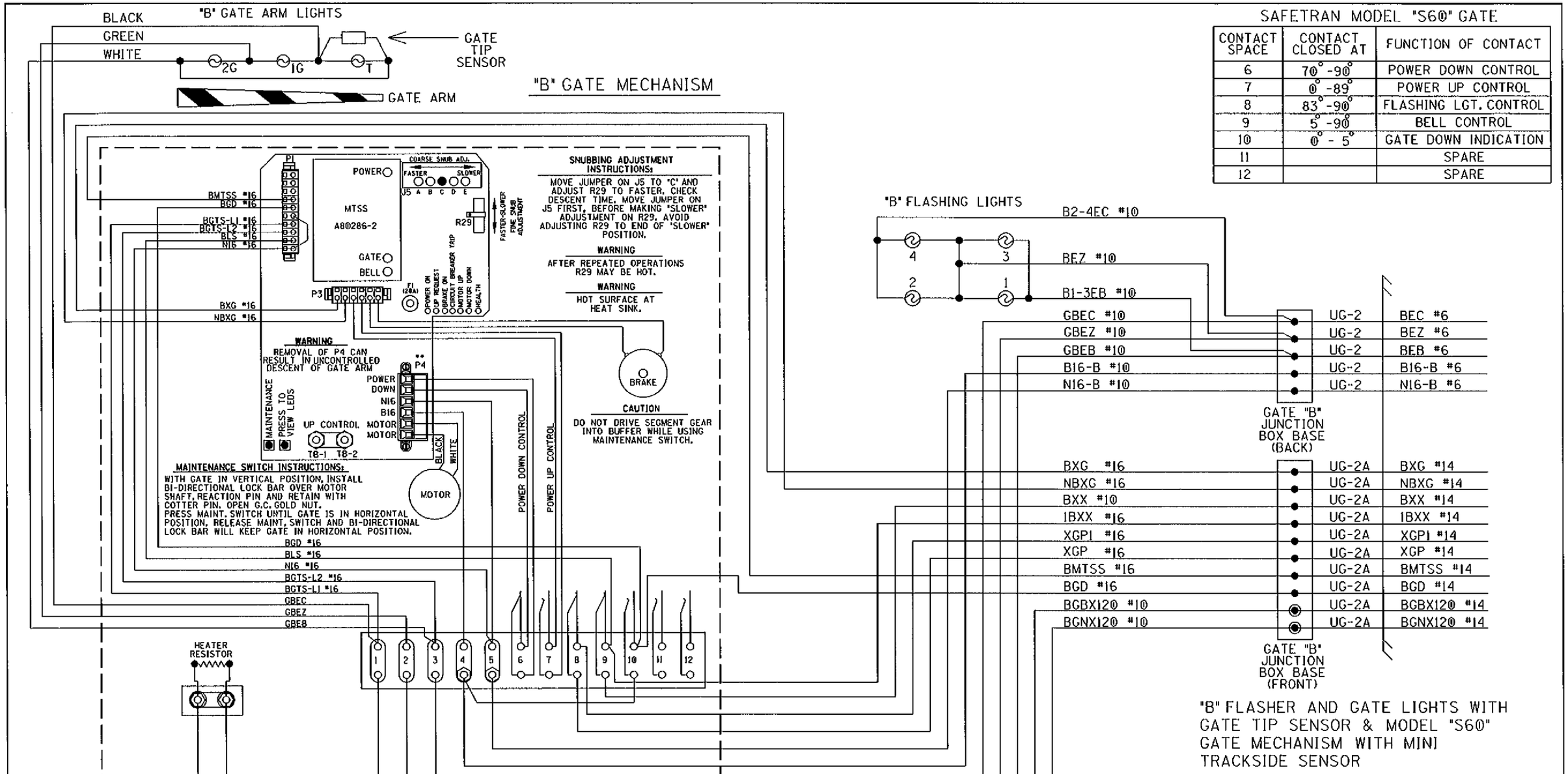

SAFETRAN MODEL "S60" GATE

CONTACT SPACE	CONTACT CLOSED AT	FUNCTION OF CONTACT
6	70°-90°	POWER DOWN CONTROL
7	0°-89°	POWER UP CONTROL
8	83°-90°	FLASHING LGT. CONTROL
9	5°-90°	BELL CONTROL
10	0°-5°	GATE DOWN INDICATION
11		SPARE
12		SPARE

"B" FLASHER AND GATE LIGHTS WITH GATE TIP SENSOR & MODEL "S60" GATE MECHANISM WITH MINI TRACKSIDE SENSOR

DESIGNED BY: WJK 12-01-09	NORFOLK SOUTHERN		
DRAWN BY: XRL 12-01-09	OFFICE OF ASS'T. VICE PRESIDENT COMM. & SIGNAL, ATLANTA, GA.	M.P.: DH-492.32	
CHECKED BY: PEH 12-08-09	BARRY, IL FLGS AT 2100E RD. (TR-148)		
IN SERVICE: - -	SPRINGFIELD-HANNIBAL DIST.	FILE No. R-	
	CADD or DWG. No. SFDH49232.15	SHEET No. 15 of 22	

REVISION INITIALS

PROPERTY
NORFOLK SOUTHERN RAILWAY CO.

LEFT TWO ROWS TERMINAL BOARD 1

"1A" "1B"

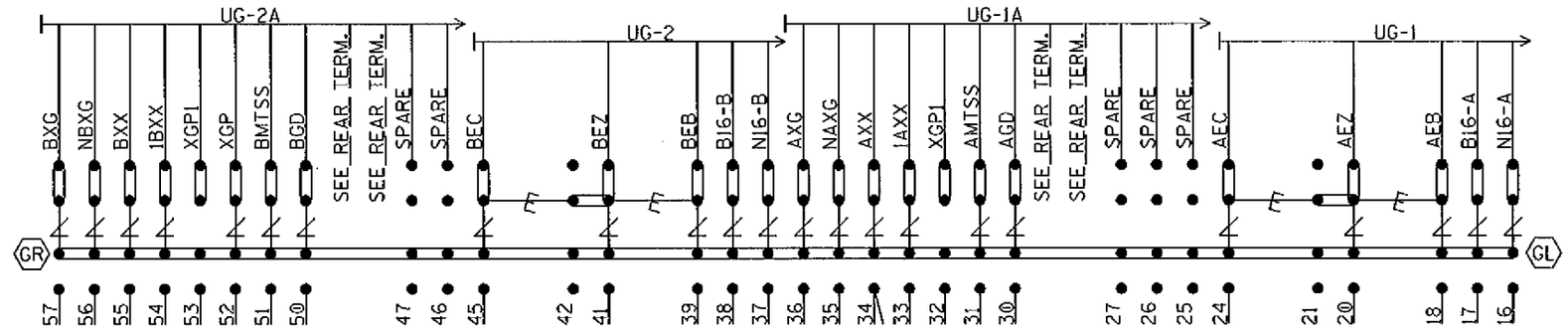

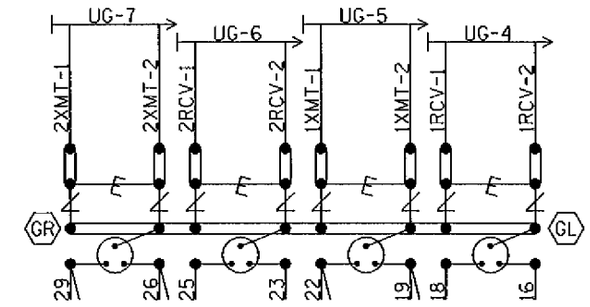

NOTE: INSTALL TEST LINKS ON ALL TRACK WIRES AND ON ALL LOW VOLTAGE UNDERGROUND CABLE TERMINATIONS.

SEE FARADAY SHIELD DETAILS - 1A & 1B FOR HOW THIS PORTION OF THE FARADAY SHIELD IS PREDRILLED. ONLY INSTALL AND USE THE TERMINALS NEEDED.

= Heavy Duty Equalizer (022700-1X)

= Clearview Lightning Arrester (022585-1X)

= LPC-10560-51

GR / GL = TERMINALS GROUNDED TO SHIELD. 4 POST BLOCKS USE EITHER - GR - SERMMI PART NO. 61278 GL - SERMMI PART NO. 61278-1.

BACKBOARD DETAIL - 1A & 1B

DESIGNED BY: WJK 12-01-09	NORFOLK SOUTHERN		
DRAWN BY: XRL 12-01-09	OFFICE OF ASS'T. VICE PRESIDENT COMM. & SIGNAL, ATLANTA, GA.	M.P.: DH-492.32	
CHECKED BY: PEH 12-08-09	BARRY, IL FLGS AT 2100E RD. (TR-148)		
IN SERVICE: - -	SPRINGFIELD-HANNIBAL DIST.	FILE No. R-	
	CADD or DWG. No. SFDH49232.16	SHEET No. 16 of 22	

REVISION INITIALS

PROPERTY NORFOLK SOUTHERN RAILWAY CO.

REAR VIEW OF LEFT TWO ROWS TERMINAL BOARD 1
"1A"
"1B"

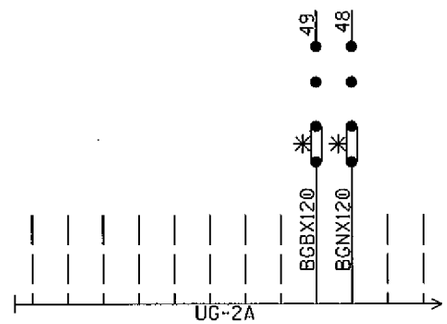

(SEE PREVIOUS SHEET FOR OTHER WIRES IN CABLE)

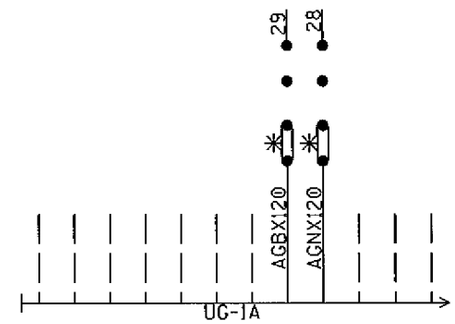

(SEE PREVIOUS SHEET FOR OTHER WIRES IN CABLE)

NOTE: ALL 120VAC AND ABOVE WILL BE WIRED TO THE REAR OF FARADAY BACKBOARD. INSULATED NUTS MUST BE USED ON ALL TERMINALS.

✳ = CLOSED DURING WINTER MONTHS

REAR OF FARADAY BACKBOARD
REAR BACKBOARD DETAIL - 1A & 1B

DESIGNED BY: WJK 12-01-09	NORFOLK SOUTHERN		
DRAWN BY: XRL 12-01-09	OFFICE OF ASS'T. VICE PRESIDENT COMM. & SIGNAL, ATLANTA, GA.	M.P.: DH-492.32	
CHECKED BY: PEH 12-08-09	BARRY, IL FLGS AT 2100E RD. (TR-148)		
IN SERVICE: - -	SPRINGFIELD-HANNIBAL DIST.	FILE No. R-	
	CADD or DWG. No. SFDH49232.17	SHEET No. 17 of 22	

REVISION INITIALS										

PROPERTY
NORFOLK SOUTHERN RAILWAY CO.

NOTE: IF THE FARADAY SHIELD WOULD EVER NEED TO BE DRILLED IN THE FIELD, PROPER PRECAUTIONS MUST BE TAKEN TO INSURE METAL SHAVINGS DO NOT GET INTO EXISTING TERMINALS/WIRES.

AREA BELOW IS SCALED WITH AS=.75

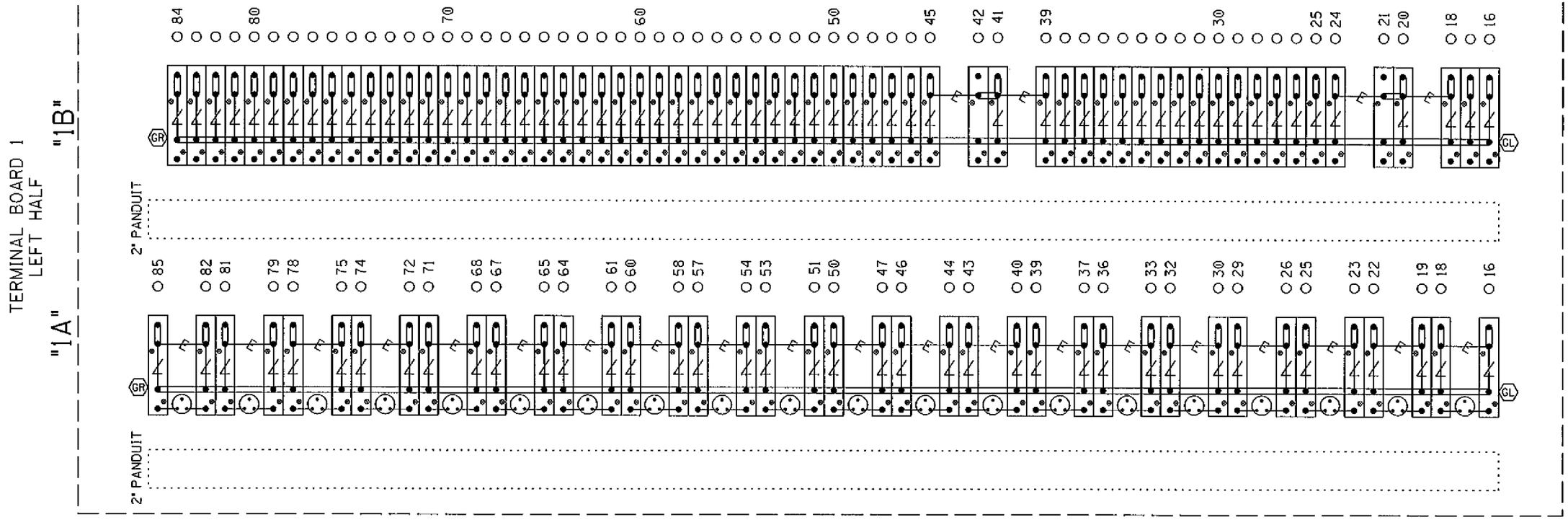

= Heavy Duty Equalizer (022700-1X)

Clearview = Lightning Arrester (022585-1X)

= LPC-10560-51

TERMINAL BOARD 1
LEFT TWO ROWS
FARADAY SHIELD DETAIL - 1A & 1B

= INDICATES PLACEMENT OF PANDUIT

THIS SHEET IS FOR REFERENCE ONLY, TO REFLECT HOW THE FARADAY SHIELD IS PREDRILLED. ONLY INSTALL AND USE THE TERMINALS NEEDED.

GR / GL = TERMINALS GROUNDED TO SHIELD. 4 POST BLOCKS USE EITHER - GR - SERMMI PART NO. 61278 GL - SERMMI PART NO. 61278-1.

DESIGNED BY: WJK 12-01-09	NORFOLK SOUTHERN		
DRAWN BY: XRL 12-01-09	OFFICE OF ASS'T. VICE PRESIDENT COMM. & SIGNAL, ATLANTA, GA.	M.P.: DH-492.32	
CHECKED BY: PEH 12-08-09	BARRY, IL FLGS AT 2100E RD. (TR-148)		
IN SERVICE: - -	SPRINGFIELD-HANNIBAL DIST.	FILE No. R-	
	CADD or DWG. No. SFDH49232.18	SHEET No. 18 of 22	

REVISION INITIALS

PROPERTY NORFOLK SOUTHERN RAILWAY CO.

NOTE: IF THE FARADAY SHIELD WOULD EVER NEED TO BE DRILLED IN THE FIELD, PROPER PRECAUTIONS MUST BE TAKEN TO INSURE METAL SHAVINGS DO NOT GET INTO EXISTING TERMINALS/WIRES.

AREA BELOW IS SCALED WITH AS=.75

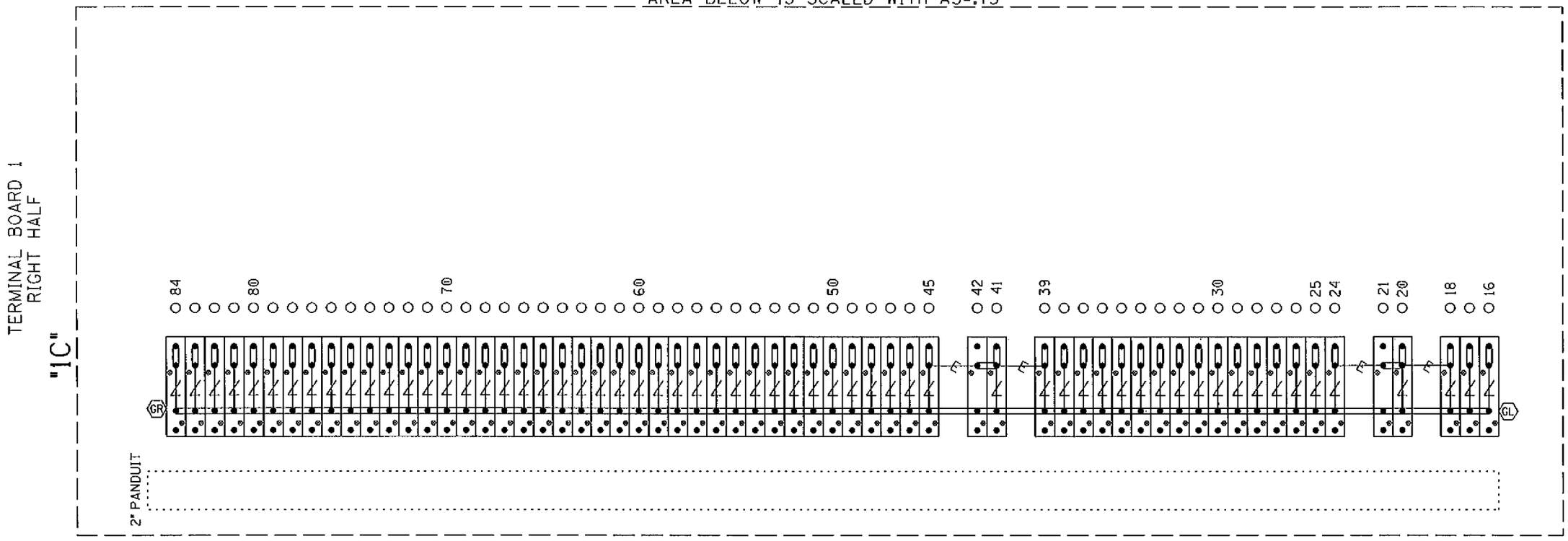

= Heavy Duty Equalizer (022700-1X)

= Clearview Lightning Arrester (022585-1X)

= LPC-10560-51

= INDICATES PLACEMENT OF PANDUIT

THIS SHEET IS FOR REFERENCE ONLY, TO REFLECT HOW THE FARADAY SHIELD IS PREDRILLED. ONLY INSTALL AND USE THE TERMINALS NEEDED.

GR / GL = TERMINALS GROUNDED TO SHIELD.
4 POST BLOCKS USE EITHER -
GR - SERMMI PART NO. 61278
GL - SERMMI PART NO. 61278-1.

TERMINAL BOARD 1
RIGHT ROW
FARADAY SHIELD DETAIL - 1C

DESIGNED BY: WJK	12-01-09
DRAWN BY: XRL	12-01-09
CHECKED BY: PEH	12-08-09
IN SERVICE:	- -

NORFOLK SOUTHERN

OFFICE OF ASS'T. VICE PRESIDENT COMM. & SIGNAL, ATLANTA, GA. | M.P.: DH-492.32

BARRY, IL
FLGS AT 2100E RD. (TR-148)

SPRINGFIELD-HANNIBAL DIST. | FILE No. R-

CADD or DWG. No. SFDH49232.19 | SHEET No. 19 of 22

REVISION INITIALS

PROPERTY
NORFOLK SOUTHERN RAILWAY CO.

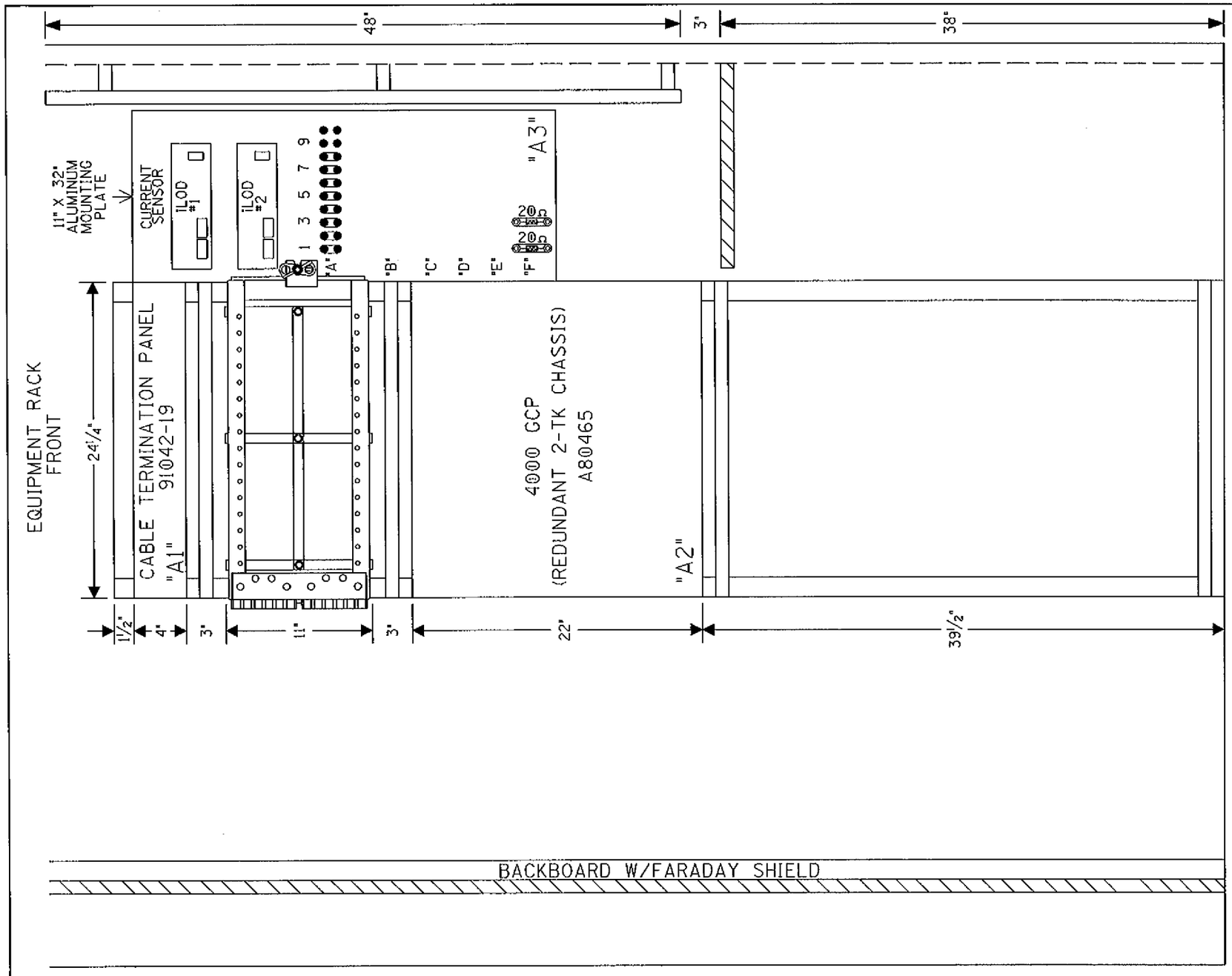

SIDE "C"

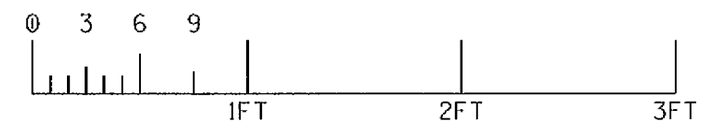

RACK PLACEMENT
6' X 6' HOUSE - SIDE "C"

DESIGNED BY: WJK 12-01-09	NORFOLK SOUTHERN	
DRAWN BY: XRL 12-01-09	OFFICE OF ASS'T. VICE PRESIDENT COMM. & SIGNAL, ATLANTA, GA.	M.P.: DH-492.32
CHECKED BY: PEH 12-08-09	BARRY, IL FLGS AT 2100E RD. (TR-148)	
IN SERVICE: - -	SPRINGFIELD-HANNIBAL DIST.	FILE No. R-
	CADD or DWG. No. SFDH49232.20	SHEET No. 20 of 22

REVISION INITIALS									

PROPERTY
NORFOLK SOUTHERN RAILWAY CO.

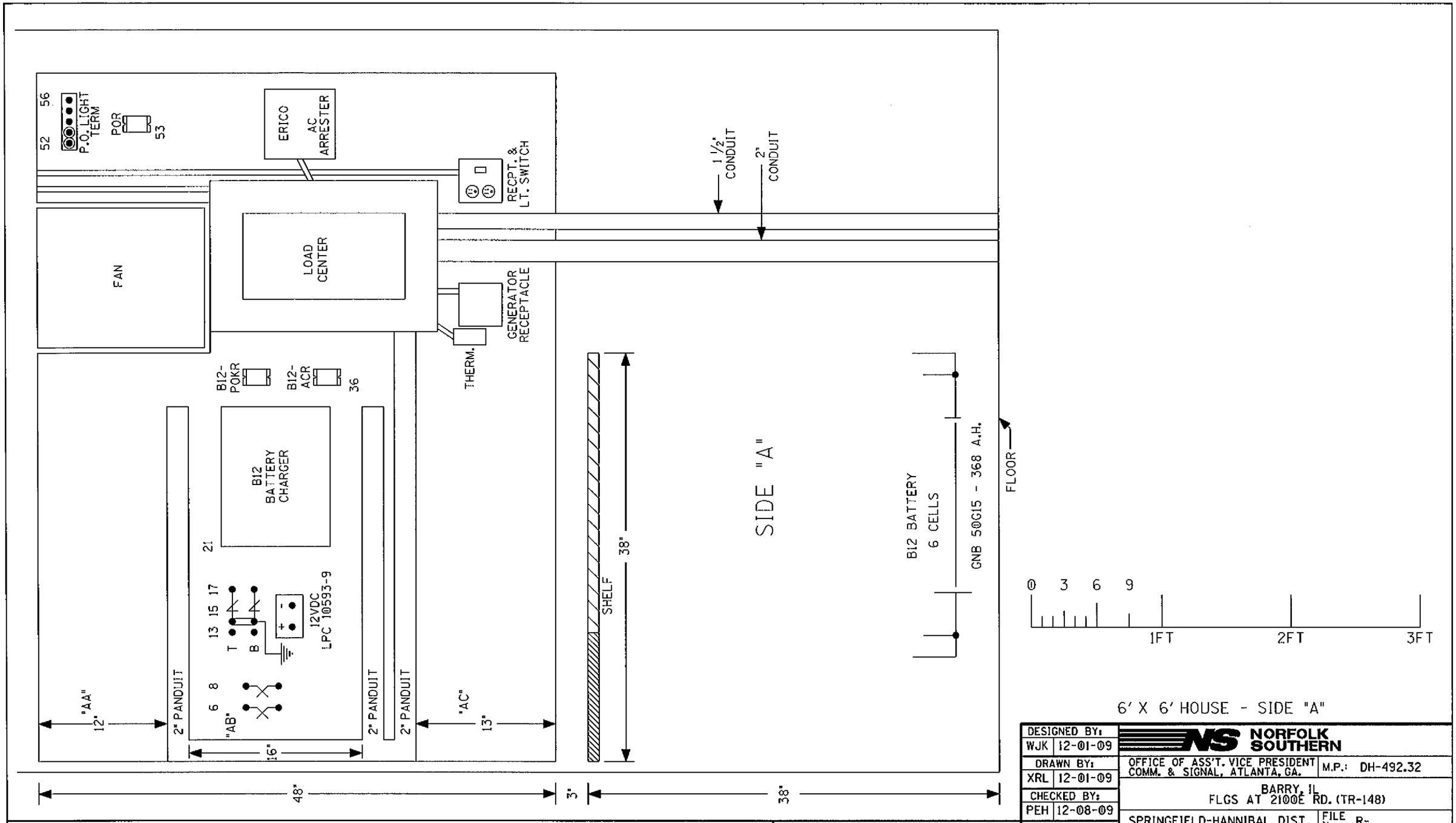

6' X 6' HOUSE - SIDE "A"

DESIGNED BY: WJK 12-01-09	NORFOLK SOUTHERN		
DRAWN BY: XRL 12-01-09	OFFICE OF ASS'T. VICE PRESIDENT COMM. & SIGNAL, ATLANTA, GA.	M.P.: DH-492.32	
CHECKED BY: PEH 12-08-09	BARRY, IL FLGS AT 2100E RD. (TR-148)		
IN SERVICE: - -	SPRINGFIELD-HANNIBAL DIST.	FILE No. R-	
	CADD or DWG. No. SFDH49232.21	SHEET No. 21 of 22	

REVISION INITIALS

PROPERTY
NORFOLK SOUTHERN RAILWAY CO.

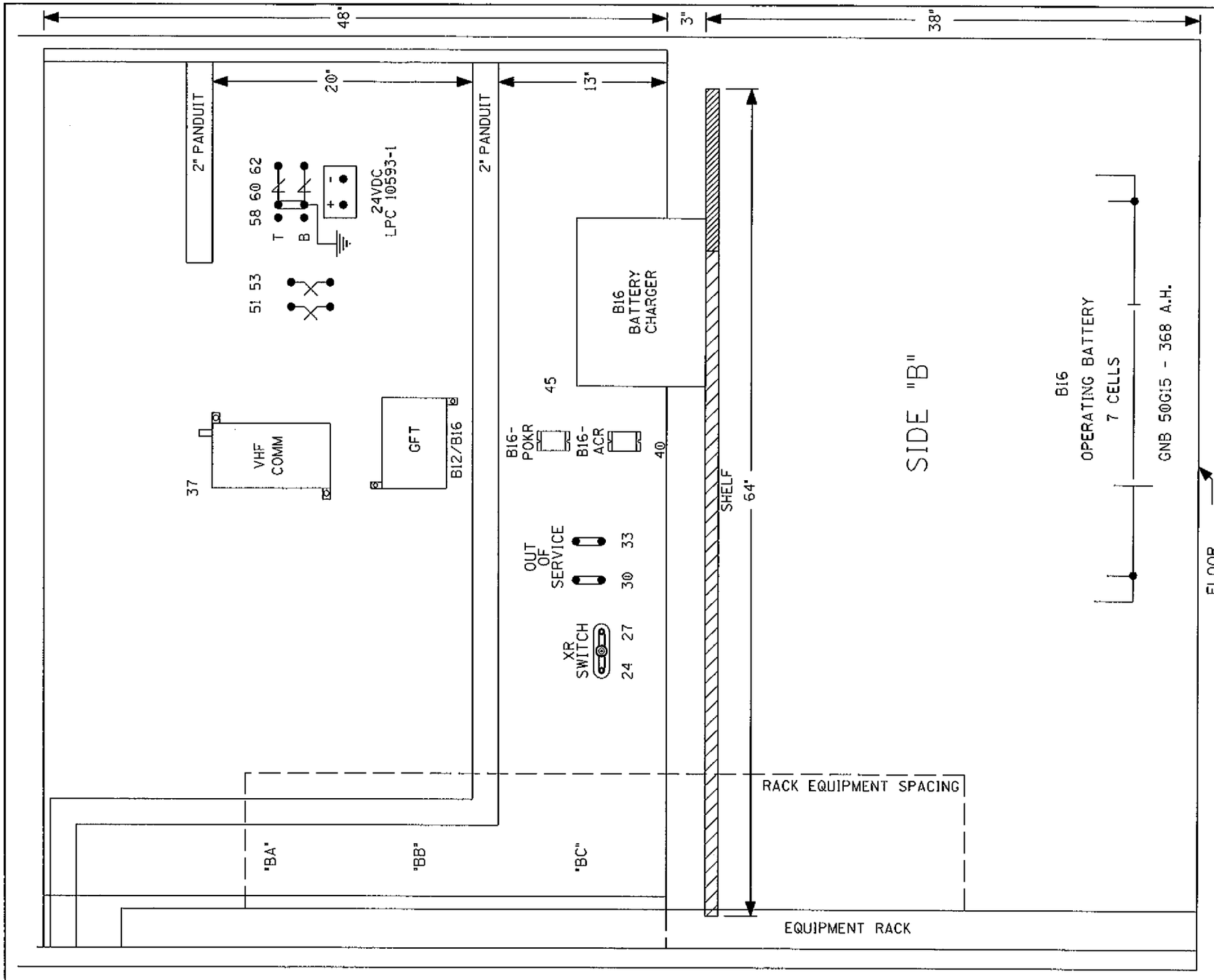

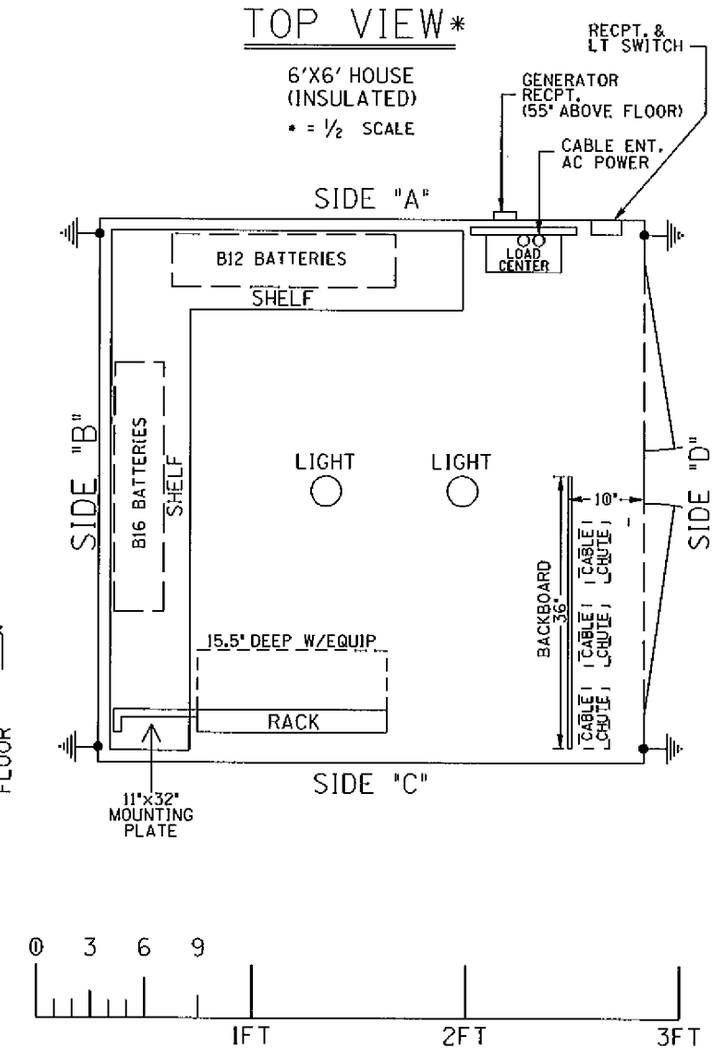

6' X 6' HOUSE (SIDE "B" & TOP VIEW)

DESIGNED BY: WJK 12-01-09	NORFOLK SOUTHERN		
DRAWN BY: XRL 12-01-09	OFFICE OF ASS'T. VICE PRESIDENT COMM. & SIGNAL, ATLANTA, GA.	M.P.: DH-492.32	
CHECKED BY: PEH 12-08-09	BARRY, IL FLGS AT 2100E RD. (TR-148)		
IN SERVICE: - -	SPRINGFIELD-HANNIBAL DIST.	FILE No. R-	
	CADD or DWG. No. SFDH49232.22	SHEET No. 22 of 22	

REVISION INITIALS										

PROPERTY
NORFOLK SOUTHERN RAILWAY CO.