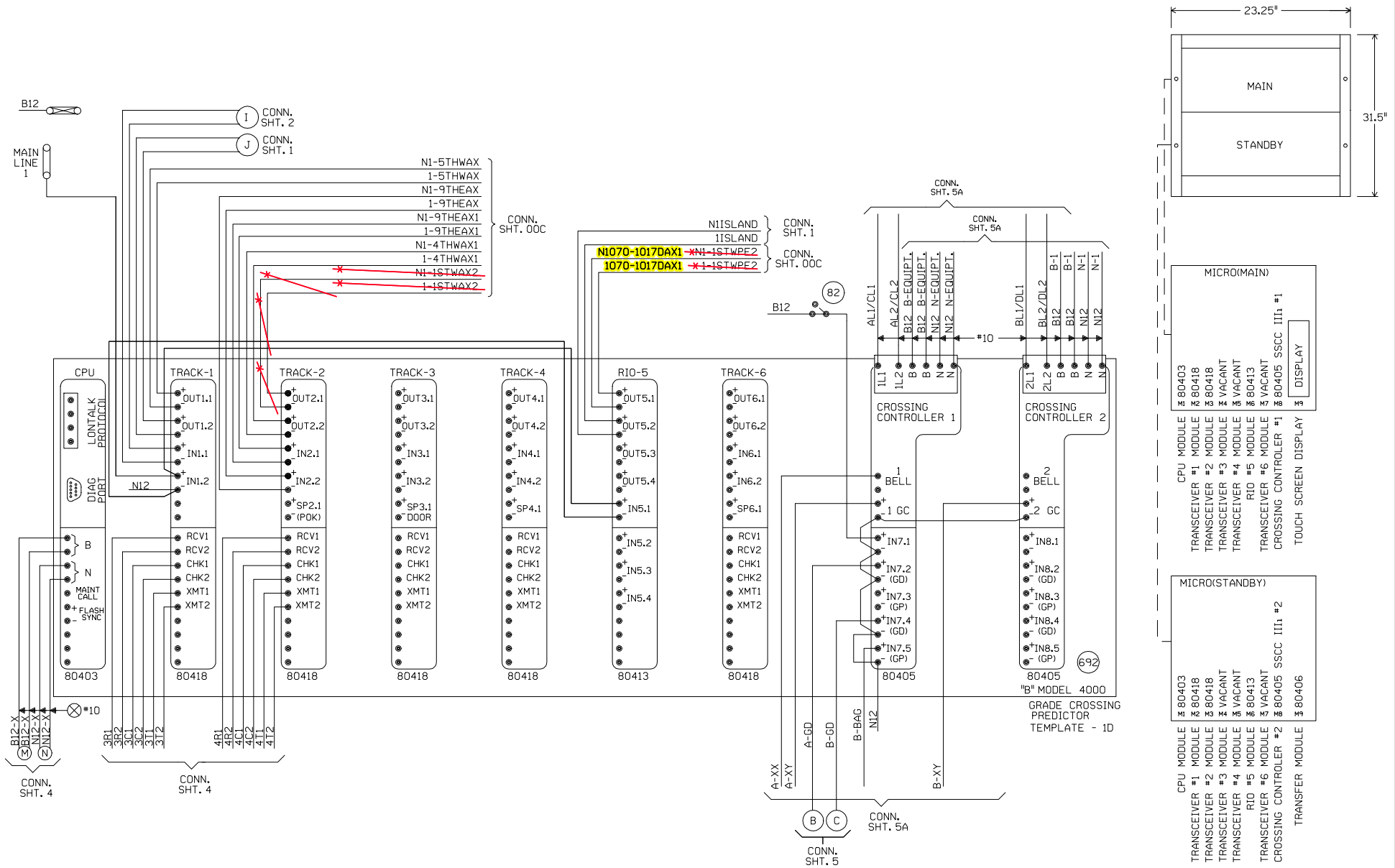

"Mf" FREQUENCY (HZ)	MAXIMUM TRANSMIT WIRE LENGTH (FEET)
86	100
114	125
156	150
211	200
285-970	250

NOTE:
EACH TRANSMITTER TO RAIL WIRE FROM XMT1 AND XMT2 MUST NOT EXCEED THE MAXIMUM LENGTH SPECIFIED IN THE TABLE SHOWN. THE RECEIVER WIRE LENGTH IS NOT CRITICAL. DOES NOT APPLY TO 6 TRACK WIRE APPLICATION.

= IN
= OUT
CTC/EDL

MAYWOOD, ILLINOIS
9TH AVENUE
M.P. 10.70
GENEVA SUBDIVISION
D.O.T.#174 001M

3 10-29-07 REMOVE ADVANCE PRE-EMPTION AT FIRST AVENUE M.P. 10.17 A.F.E. 85551 JJL / /CTC/JJF	REV. 9-23-08 INSTALLED CROSSING CONTROLLER CARDS TO EXISTING GCP 4000 AT 9TH AVENUE. REC. #15247 6-2-08 RLT TH/WITT/CTC/RDD	REV. 9-23-08 REPLCAED HXP-1 WITH A GCP 4000 AT 9TH AVENUE M.P. 10.70 W.O. #60735 REC. #15247 6-2-08 RLT TH/WITT/CTC/RDD

MODIFICATION LEVEL	
Q. A. LAST LEVEL CHECKED	DM
LAST LEVEL MOD THIS TYPICAL	DM
LAST LEVEL BY DESIGNER	DM
CHANGED FROM TYPICAL?	Y

REV 02.01.06 4K 4TKB4GF.4

UNION PACIFIC
QUALITY PRODUCTIVITY SAFETY
SIGNAL DESIGN

DES: CTC
DIG: CTC
CHK: RLT
A.F.E.
ID= GEN01070.3X

UNION PACIFIC RAILROAD

CHICAGO, ILLINOIS
TO CLINTON, IOWA
C.T.C. CIRCUITS

Office of Sr.AVP Engineering - Signal/TCO Omaha, Nebraska

DATE 09-07-05
SHEET 3
DWG 10.70
GEN

```
Minimum Program Steps Report
----------------------------

Location and SIN
----------------
DOT Number: 174001M
Milepost Number: 10.70
Site Name: MAYWOOD, IL UP TRK 1

SIN: 762010010016 *

* Parameter is part of office check number calculation.

MCF and Template Selection
--------------------------
MCF Name: GCP_T6X_01_1.mcf
MCF Revision: 011
MCFCRC: 5561E572

Template = MTF_1D: 6 Uni *

* Parameter is part of office check number calculation.

Minimum Program Steps
---------------------
TEMPLATE:  module configuration
Track 5/RIO 1 Slot = RIO *
SEAR Used = No *

TEMPLATE:  track 1-Uni, Island
Track 1 : GCP Frequency = 645 Hz
Track 1 : Approach Distance = 1229 ft (See Plans)
Track 1 : Prime Warning Time = 26 sec *
Track 1 : Prime UAX = IP *
Track 1 : Prime UAX Pickup = 15 sec *
Track 1 : Isl Frequency = 10.0 kHz
Track 1 : Island Distance = 126 ft (Verify in Field)

TEMPLATE:  track 2-Uni,No Island
Track 2 : GCP Frequency = 211 Hz
Track 2 : Approach Distance = 3420 ft (Verify in Field)
Track 2 : Prime Warning Time = 26 sec *
Track 2 : Uni/Bi/Sim-Bidirnl = Sim. Bidirnl *

TEMPLATE:  track 2 Daxes
Track 2 : Dax A Used = Yes *
Track 2 : Dax A Warning Time = 33 sec *
Track 2 : Dax A Offset Distance = 1362 ft (Verify in Field)
Track 2 : Dax B Used = Yes *
Track 2 : Dax B Warning Time = 26 sec *
Track 2 : Dax B Offset Distance = 1706 ft (Verify in Field)

TEMPLATE:  AND 1 XR
AND 1 Enable Used = Yes *

TEMPLATE:  OP assignment 1
OUT 1.1 = T2 Dax A *
OUT 1.2 = AND 1 XR *
OUT 2.2 = T2 Dax B *

TEMPLATE:  OP assignment 2
OUT 5.1 = T2 Dax D *
OUT 5.2 = T1 Island *

TEMPLATE:  IP assignment 1
IN 1.1 = AND 1 XR Enable *
IN 1.2 = T1 Out Of Service *
IN 2.1 = T1 Prime UAX *
IN 2.2 = T1 Prime UAX *

TEMPLATE:  IP assignment 2
IN 5.1 = T2 Out Of Service *

TEMPLATE:  IP assignment SSCC
IN 7.1 = AND 1 XR Enable *

PREDICTORS:  track 2
Track 2 : Dax D Used = Yes *

GCP:  track 2 Dax D
Track 2 : Dax D Warning Time = 46 sec *
Track 2 : Dax D Offset Distance = 2734 ft *

ADVANCED:  MS restart
MS/GCP Restart Used = Yes *
MS/GCP Restart all Trks = No *

ADVANCED:  restart track 1
Track 1 : Prime switch to MS = No *

ADVANCED:  out of service
Out Of Service Timeout = No *
Out Of Service IPs Used = Yes *

* Parameter is part of office check number calculation.
```

```
Check Numbers
-------------
Office Check No. (DT 4.6.0): 2B134E24
Office Check Number: 2B134E24
Config. Check Number: 0D679988
(Based on MCF Revision 011)

Parameters not part of office check number calculation:

Track 1 : GCP Frequency = 645 Hz
Track 1 : Approach Distance = 1229 ft (See Plans)
Track 1 : Isl Frequency = 10.0 kHz
Track 1 : Island Distance = 126 ft (Verify in Field)
Track 2 : GCP Frequency = 211 Hz
Track 2 : Approach Distance = 3420 ft (Verify in Field)
Track 2 : Dax A Offset Distance = 1362 ft (Verify in Field)
Track 2 : Dax B Offset Distance = 1706 ft (Verify in Field)

Comments
--------
<none>

Configuration Package File
--------------------------
Filename: GEN1070_174001M_B.pac
Path: Z:\Awaiting_W.O. Approvals\2007\up07338\GCP Programs\
Date/Time: 1/21/2010 14:28:58
DT Version: 4.8.5
```

NOTES:
FIELD TO PROVIDE MS/GCP RESTART TIME.
FIELD PROVIDE IF DAX A, DAX B & DAX D
FOR TRACK 2 NEED MS RESTART.

NEW SHEET
MAYWOOD, ILLINOIS
9TH AVENUE
M.P. 10.70
GENEVA SUBDIVISION
D.O.T.#174 001M

1	10-29-07 REMOVE ADVANCE PRE-EMPTION AT FIRST AVENUE M.P. 10.17 A.F.E. 85551 JJL / /CTC/JJF

NOTE: Actual OFFSET and ISLAND distances must be verified by field personnel.

UNION PACIFIC SIGNAL DESIGN

DES:	CTC
DIG:	CTC
CHK:	JJL
A.F.E.	85551
ID= GEN1070.3AX	

UNION PACIFIC RAILROAD
CHICAGO, ILLINOIS
TO CLINTON, IOWA
C.T.C. CIRCUITS
Office of Sr.AVP Engineering - Signal/TCO Omaha, Nebraska

DATE	10-29-07
SHEET	3A
DWG	10.70
	GEN

```
Minimum Program Steps Report
----------------------------

Location and SIN
----------------
DOT Number: 174001M
Milepost Number: 10.70
Site Name: 9th Ave UP Tk1 (north)

SIN: 700000000000 *

* Parameter is part of office check number calculation.

MCF and Template Selection
--------------------------
MCF Name: GCP_T6X_01_1.mcf
MCF Revision: 011
MCFCRC: 5561E572

Template = MTF_1D: 6 Uni *

* Parameter is part of office check number calculation.

Minimum Program Steps
---------------------
TEMPLATE:  module configuration
Track 5/RIO 1 Slot = RIO *

TEMPLATE:  track 1-Uni, Island
Track 1 : GCP Frequency = 645 Hz
Track 1 : Approach Distance = 1256 ft See Plans
Track 1 : Prime Warning Time = 26 sec *
Track 1 : Prime UAX = IP *
Track 1 : Isl Frequency = 10.0 kHz
Track 1 : Island Distance = 126 ft Verify in Field

TEMPLATE:  track 2-Uni,No Island
Track 2 : GCP Frequency = 211 Hz
Track 2 : Approach Distance = 3420 ft Verify in Field
Track 2 : Prime Warning Time = 26 sec *
Track 2 : Uni/Bi/Sim-Bidirnl = Sim. Bidirnl *

TEMPLATE:  track 2 Daxes
Track 2 : Dax A Used = Yes *
Track 2 : Dax A Warning Time = 40 sec *
Track 2 : Dax A Offset Distance = 1282 ft Verify in Field
Track 2 : Dax B Used = Yes *
Track 2 : Dax B Warning Time = 40 sec *
Track 2 : Dax B Offset Distance = 1623 ft Verify in Field
Track 2 : Dax C Used = Yes *
Track 2 : Dax C Warning Time = 40 sec *
Track 2 : Dax C Offset Distance = 2626 ft Verify in Field

TEMPLATE:  AND 1 XR
AND 1 Enable Used = Yes *
And 1 Enable Pickup = 2 sec *

TEMPLATE:  OP assignment 1
OUT 1.1 = T2 Dax A *
OUT 1.2 = AND 1 XR *
OUT 2.1 = T2 Dax C *
OUT 2.2 = T2 Dax B *

TEMPLATE:  OP assignment 2
OUT 5.1 = T2 Dax D *
OUT 5.2 = T1 Island *

TEMPLATE:  IP assignment 1
IN 1.1 = AND 1 XR Enable *
IN 1.2 = T1 Out Of Service *
IN 2.1 = T1 Prime UAX *
IN 2.2 = T1 Prime UAX *

TEMPLATE:  IP assignment 2
IN 5.1 = T2 Out Of Service *

TEMPLATE:  IP assignment SSCC
IN 7.1 = AND 1 XR Enable *

PREDICTORS:  track 2
Track 2 : Dax D Used = Yes *

GCP:  track 1 MS Control
Track 1 : Island Routes = Isl 1 *

GCP:  track 2 Dax D
Track 2 : Dax D Warning Time = 46 sec *
Track 2 : Dax D Offset Distance = 2626 ft *

ISLAND:  track 1
Track 1 : Pickup Delay = 4 sec *

ADVANCED:  out of service
Out Of Service Timeout = No *
Out Of Service IPs Used = Yes *

SSCC
Bell On Gate Rising = Yes *

SSCC:  1
SSCC 1 : Lamp Neutral Test = Off *

SSCC:  2
SSCC 2 : Lamp Neutral Test = Off *

SITE:  programming
Password Access = On *

* Parameter is part of office check number calculation.

Check Numbers
-------------
Office Check Number: 0E7C4D3E
Config. Check Number: 0969977E
(Based on MCF Revision 011)

Parameters not part of office check number calculation:

Track 1 : GCP Frequency = 645 Hz
Track 1 : Approach Distance = 1256 ft See Plans
Track 1 : Isl Frequency = 10.0 kHz
Track 1 : Island Distance = 126 ft Verify in Field
Track 2 : GCP Frequency = 211 Hz
Track 2 : Approach Distance = 3420 ft Verify in Field
Track 2 : Dax A Offset Distance = 1282 ft Verify in Field
Track 2 : Dax B Offset Distance = 1623 ft Verify in Field
Track 2 : Dax C Offset Distance = 2626 ft Verify in Field

Comments
--------
<none>

Configuration Package File
--------------------------
Filename: CONFIG-174001Mtk1-2008Sep22.pac
Path: \\Adamserver\c\Dgn\AC08-234\GENEVA SUB_Design_Circuit Plan_10.7_Sheet_542330\PAC FILES\#1\
Date/Time:
```

"TO BE VOIDED"

MAYWOOD, ILLINOIS
9TH AVENUE
M.P. 10.70
GENEVA SUBDIVISION
D.O.T.#174 001M

	3 10-29-07 M.P. 10.17 A.F.E. 85551 / /CTC/JJF	REV. 9-23-08 INSTALLED CROSSING CONTROLLER CARDS TO EXISTING GCP 4000 AT 9TH AVENUE. REC. #15247 6-2-08 RLT TH/WITT/CTC/RDD	REV. 9-23-08 REPLCAED HXP-1 WITH A GCP 4000 AT 9TH AVENUE M.P. 10.70 W.O. #60735 REC. #15247 6-2-08 RLT TH/WITT/CTC/RDD	**NOTE: Actual OFFSET and ISLAND distances must be entered by field personnel.**	UNION PACIFIC QUALITY PRODUCTIVITY SAFETY SIGNAL DESIGN	DES: DIG: WITT CHK: A.F.E. ID= GEN01070.3AX	**UNION PACIFIC RAILROAD** CHICAGO, ILLINOIS TO CLINTON, IOWA C.T.C. CIRCUITS Office of Sr.AVP Engineering - Signal/TCO Omaha, Nebraska	DATE 9-23-08 SHEET 3A DWG 10.70 GEN

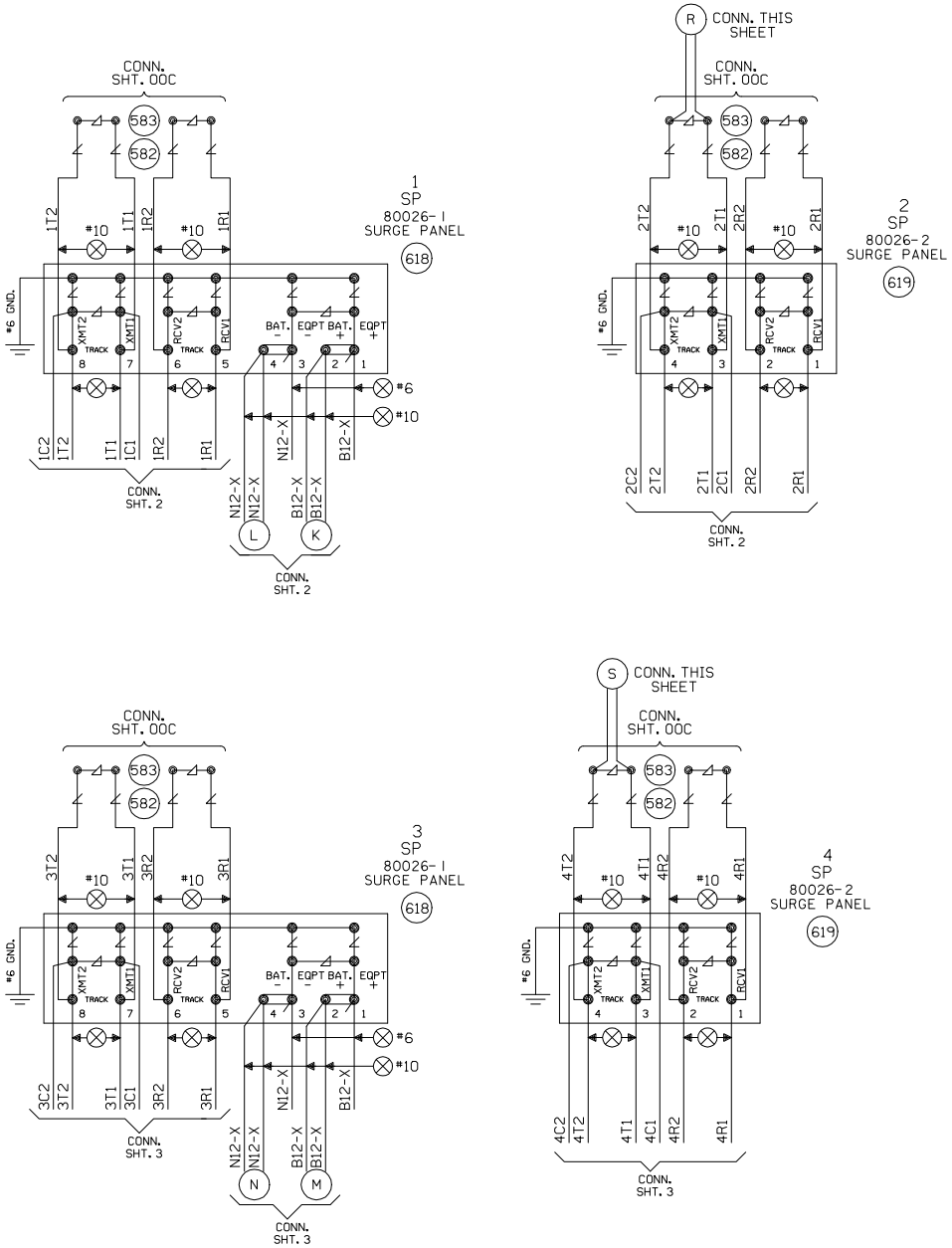

MAYWOOD, ILLINOIS
9TH AVENUE
M.P. 10.70
GENEVA SUBDIVISION
D.O.T.#174 001M

			3 10-29-07 M.P. 10.17 A.F.E. 85551 / /CTC/JJF	REV. 9-23-08 INSTALLED CROSSING CONTROLLER CARDS TO EXISTING GCP 4000 AT 9TH AVENUE. REC. #15247 6-2-08 RLT TH/WITT/CTC/RDD	REV. 9-23-08 REPLCAED HXP-1 WITH A GCP 4000 AT 9TH AVENUE M.P. 10.70 W.O. #60735 REC. #15247 6-2-08 RLT TH/WITT/CTC/RDD	MODIFICATION LEVEL Q. A. LAST LEVEL CHECKED DM LAST LEVEL MOD THIS TYPICAL DM LAST LEVEL BY DESIGNER DM CHANGED FROM TYPICAL? Y REV 02.01.06 4K 4TKSPGFC.5	UNION PACIFIC QUALITY PROJECTIVITY SAFETY SIGNAL DESIGN	DES: CTC DIG: CTC CHK: RLT A.F.E. ID= GEN01070.4X	UNION PACIFIC RAILROAD CHICAGO, ILLINOIS TO CLINTON, IOWA C.T.C. CIRCUITS Office of Sr.AVP Engineering - Signal/TCO Omaha, Nebraska	DATE 09-07-05 SHEET 4 DWG 10.70 GEN

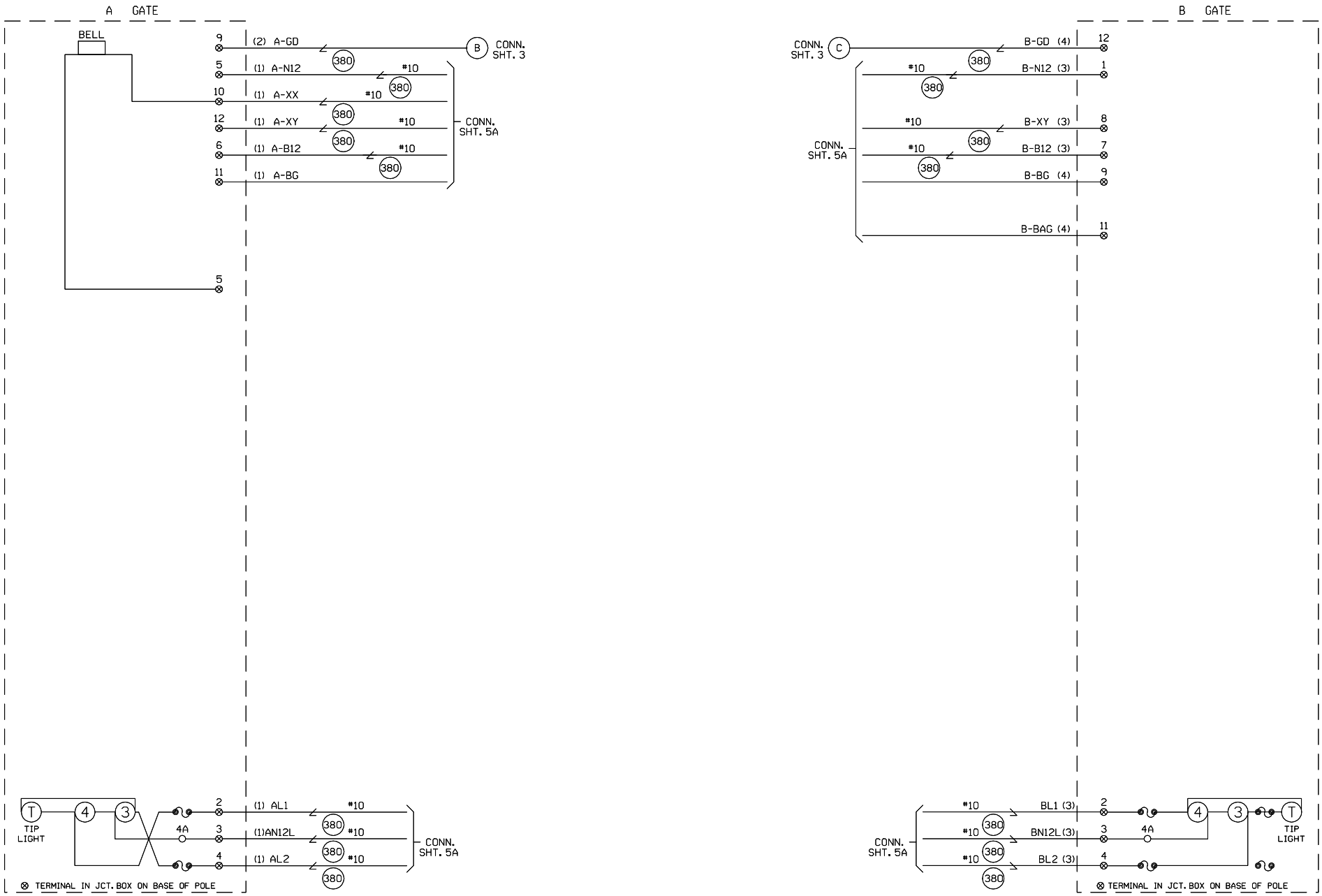

CABLE TABULATION

CABLE NO. 1 7C. NO.6 U.G.B.T.
CABLE NO. 2 5C. NO.14 U.G.B.T.
CABLE NO. 3 7C. NO.6 U.G.B.T.
CABLE NO. 4 7C. NO.14 U.G.B.T.

MAYWOOD, ILLINOIS
9TH AVENUE
M.P. 10.70
GENEVA SUBDIVISION
D.O.T.#174 001M

2	10-29-07	REV. 9-23-08 INSTALLED CROSSING CONTROLLER CARDS TO EXISTING GCP 4000 AT 9TH AVENUE. REC. #15247 6-2-08 RLT TH/WITT/CTC/RDD	
M.P. 10.17 A.F.E. 85551	/ /CTC/JJF		

MODIFICATION LEVEL	
Q. A. LAST LEVEL CHECKED	D0
LAST LEVEL MOD THIS TYPICAL	D0
LAST LEVEL BY DESIGNER	D0
CHANGED FROM TYPICAL?	Y
REV 09.01.06 4K GFCTYP.5	

UNION PACIFIC
QUALITY PRODUCTIVITY SAFETY
SIGNAL DESIGN

DES:	CTC
DIG:	CTC
CHK:	JTB
A.F.E.	
ID= GEN01070.5X	

UNION PACIFIC RAILROAD

CHICAGO, ILLINOIS
TO CLINTON, IOWA
C.T.C. CIRCUITS

Office of Sr.AVP Engineering - Signal/TCO Omaha, Nebraska

DATE	06-09-06
SHEET	5
DWG	10.70
	GEN