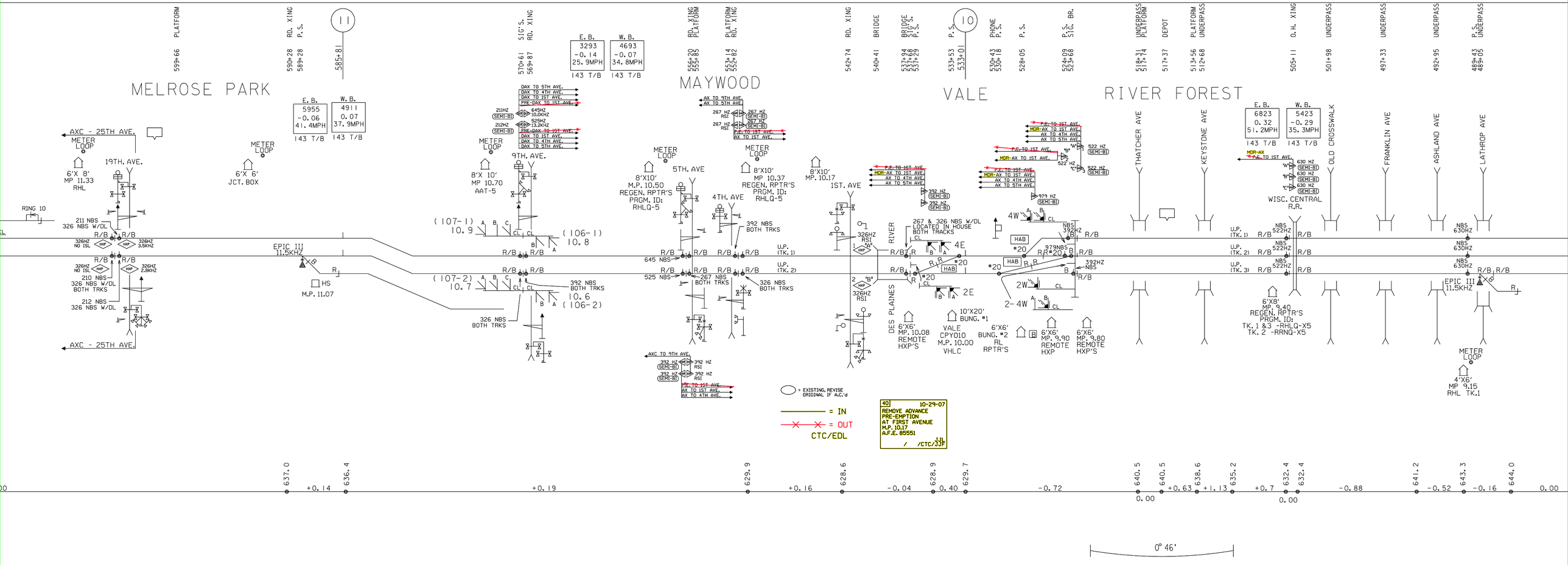

MELROSE PARK
MAYWOOD
VALE
RIVER FOREST
PLATFORM
RD. XING
P.S.
SIG'S.
BRIDGE
PHONE
SIG. BR.
UNDERPASS
DEPOT
O.H. XING
AXC - 25TH AVE.
METER LOOP
19TH. AVE.
6'X 8' MP 11.33 RHL
6'X 6' JCT. BOX
RING 10
211 NBS 326 NBS W/DL
210 NBS 326 NBS W/DL BOTH TRKS
212 NBS 326 NBS W/DL
EPIC III 11.5KHZ
M.P. 11.07
8'X 10' MP 10.70 AAT-5
9TH. AVE.
(107-1) 10.9
(106-1) 10.8
(107-2) 10.7
10.6 (106-2)
392 NBS BOTH TRKS
326 NBS BOTH TRKS
8'X10' M.P. 10.50 REGEN. RPTR'S PRGM. ID: RHLQ-5
5TH. AVE
4TH. AVE
8'X10' MP 10.37 REGEN. RPTR'S PRGM. ID: RHLQ-5
8'X10' MP. 10.17
1ST. AVE
645 NBS
525 NBS
267 NBS BOTH TRKS
326 NBS BOTH TRKS
U.P. (TK. 1)
U.P. (TK. 2)
DES PLAINES RIVER
267 & 326 NBS W/DL LOCATED IN HOUSE BOTH TRACKS
6'X6' MP. 10.08 REMOTE HXP'S
10'X20' BUNG. #1
VALE CPY010 M.P. 10.00 VHLC
6'X6' BUNG. #2 RL RPTR'S
6'X6' MP. 9.90 REMOTE HXP
6'X6' MP. 9.80 REMOTE HXP'S
THATCHER AVE
KEYSTONE AVE
OLD CROSSWALK
FRANKLIN AVE
ASHLAND AVE
LATHROP AVE
WISC. CENTRAL R.R.
6'X8' MP. 9.40 REGEN. RPTR'S PRGM. ID: TK. 1 &3 -RHLQ-X5 TK. 2 -RRNQ-X5
EPIC III 11.5KHZ
4'X6' MP 9.15 RHL TK.1
= EXISTING, REVISE ORIGINAL IF A.C.'d
= IN
= OUT
CTC/EDL
40 10-29-07
REMOVE ADVANCE PRE-EMPTION AT FIRST AVENUE M.P. 10.17 A.F.E. 85551
JJL
/CTC/JJF
637.0 636.4 629.9 628.6 628.9 629.7 640.5 640.5 638.6 635.2 632.4 632.4 641.2 643.3 644.0
+0.14 +0.19 +0.16 -0.04 0.40 -0.72 0.00 +0.63 +1.13 +0.7 0.00 -0.88 -0.52 -0.16 0.00
0° 46'

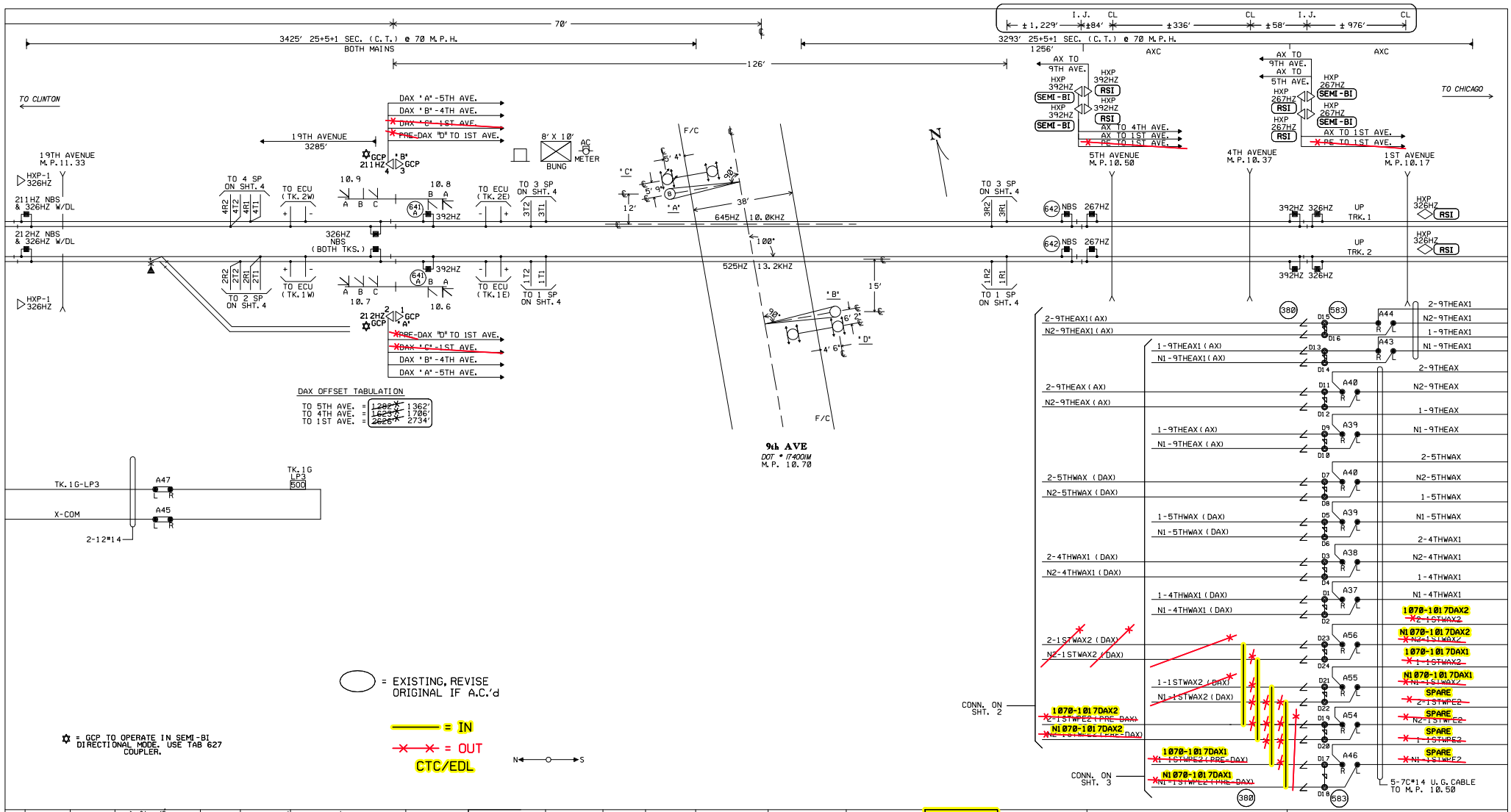

REVISIONS

DRAWN BY A.COX
DATE: 3-5-90
APE: 806949
FILE:

DATE: 12-30-91 AVB.
REVISED PER F.C.
DATED 3-12-91 BY
T.P.ZUBB.

6-4-93 JEP
REVISED PER F.C. BY
TPZ. DATED 12-16-92
ACCT. CODE CHANGE &
C HEAD ADDED TO SIG.
1Ø.9 ALSO STARTS
FOR 1ST.AVE.ADDED.
IN SERV.11-24-92

REV. 10-17-95
PER 'AC'
8-6-93 PMN/HAR

REV. 2-18-97
PER 15TH AVE.
ABANDONMENT
11-26-96 KRB/JHW/CDL

REV. 2-27-98
ADDED DIMENSIONAL
INFORMATION FURNI-
SHED BY FIELD AND
REVISED TO SHOW ALL
LOCATIONS WITHIN
XING APPROACHES ON
XING FRT.SHT.PER
U.P. STANDARDS.
5-20-97
CJB/WITT/JNM

6 REV. 2-12-01
JWP AND E.C.
UPGRADE PROJECT
M.P. 10.00-10.50
W.O. 338144
10-15-00
CJB/WITT/HAR/JNM

REV. 12-20-03
INSTALLED 22 SECONDS
ADV. PREEMPTION AT
M.P. 10.17
W.O. #39659
REC. #9213
4-10-03
JJD/WITT/GEHH/JNM

REV. 5-20-03
INSTALLED CRTU
AT M.P.10.37
W.O. #39652
REC. #9213
4-10-03
JJD/WITT/WITT/EML

REV. 6-23-04
REMOVED 1ST TRACK
REC.#7333
5-26-04
TW/WITT

REV.12-21-04
REMOVED REC. FOR
1ST AVE.(MP10.17)
REC#11973
4-30-04
MW/WITT

11 REV. 09-26-07
M.P.'S CHANGED ON
CROSSINGS PER AC.
M.P.10.50 - M.P.27.54
REC. #14590
06-07-07 / JJD/NST/

REV. 9-23-08
RELOCATED MP-1
WITH A GCP 4000
AT 9TH AVENUE
M.P. 10.70
W.O. #60735
REC. #15247
6-2-08
TH/WITT/CTC/RDD

REV. 9-23-08
INSTALLED CROSSING
CONTROLLER CARDS
TO EXISTING
GCP 4000 AT
AT 9TH AVENUE.
REC. #15247
6-2-08
TH/WITT/CTC/RDD

14 10-29-07
REMOVE ADVANCE
PRE-EMPTION
AT FIRST AVENUE
M.P.10.17
A.F.E. 85551
/ /CTC/JJF

UNION PACIFIC
QUALITY PRODUCTIVITY SAFETY
SIGNAL DESIGN

MAYWOOD, IL.
9th AVE
M.P.10.70
GENEVA SUB.

MATCH TO: GEN0107.00C

MATCH TO: GEN0500JX

ID=GEN01070.00C

SYSTEM&TIME&&&&&&

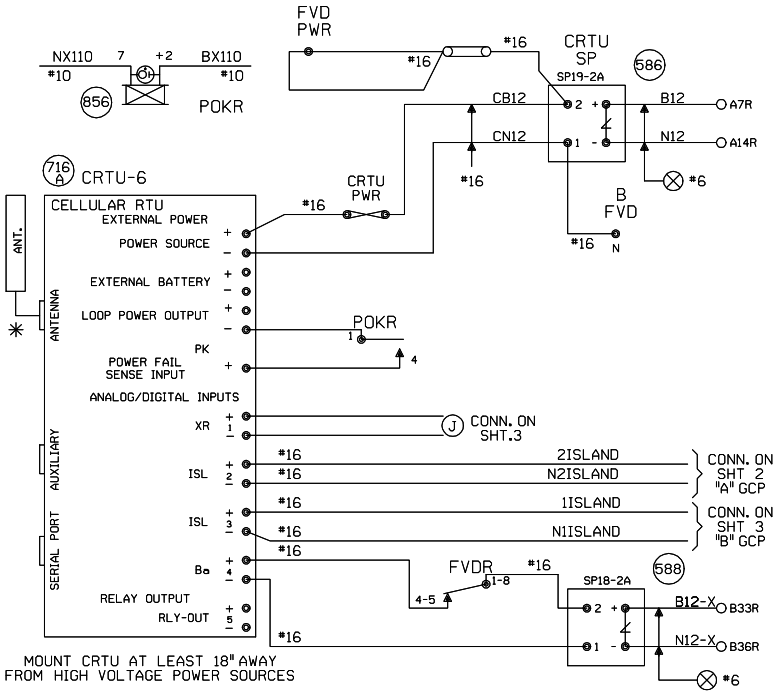

NOTES:

ALL DIODES 1N5060 OR 1N4004 UNLESS OTHERWISE NOTED.
✳ MOUNT ANTENNA ON TOP OF HOUSE.
ALL WIRES #18 UNLESS OTHERWISE NOTED.
ALL UNUSED 'NC' INPUTS MUST BE TIED HIGH TO BATTERY
ALL UNUSED ANALOG INPUTS MUST BE TIED HIGH TO BATTERY
ALL UNUSED 'NO' INPUTS MUST BE DISCONNECTED

CRTU FRONT PANEL DISPLAY CHART INDICATES NORMAL STATE

■ DIGITAL INPUT HIGH, OR POWER FAIL INPUT CLOSED

□ DIGITAL INPUT LOW, OR POWER FAIL INPUT OPEN

NORMAL STATE FOR ANALOG CHANNELS IS EQUAL TO THE STORED NOMINAL VOLTAGE +120% OR -81%

■ L ← LATCH IS SET BECAUSE CRTU DETECTED AN ALARM CONDITION

12.06V L ←

'sRUN MODE' 'sRUN MODE-SILENT'

CRTU RADIO IS DISABLED. REPROGRAM CRTU WITH LAPTOP.

MEASURE NOMINAL VOLTAGE ON ANALOG INPUT MODULE BETWEEN 1 +30VIN AND 7 VINCOM

ANALOG AND AC INPUT MODULES MUST BE MOUNTED LESS THAN 12" FROM THE CRTU

ANALOG MODULES CONVERT DC VOLTAGE TO A SQUARE WAVE. A WORKING ANALOG MODULE WILL HAVE 4.5VDC TO 8.0VDC BETWEEN 5VOUT+ AND 6VOUT-. WHERE, 0VOLTS = 0HZ OUT, 30VOLTS = 10KHZ OUT, AND 15VOLTS = 5KHZ OUT MAKE SURE CRTU IS PROGRAMMED WITH CALIBRATION SETTINGS.

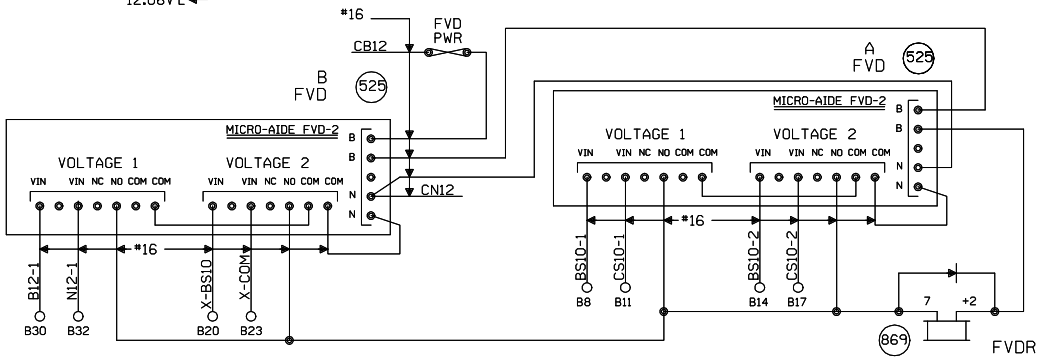

UNIT INSTALLATION AND SETUP

R.R. SITE ID WHERE; SSSS = 4 CHARACTER SUBDIVISION ID. FILL WITH PRECEDING ZEROS AS REQUIRED. THE MAIN TRACK SUBDIVISION ID* IS IN THE CURRENT TIMETABLE. INDUSTRIAL LEADS, LEASED, AND LEAD TRACKS LISTED WITHIN THE SUBDIVISION MAY HAVE THEIR OWN UNIQUE SUBDIVISION ID*. DO NOT AUTOMATICALLY USE THE MAIN TRACK SUBDIVISION ID* FOR THESE OTHER TRACKS. ALWAYS DOUBLE CHECK WITH THE MOST CURRENT PRINTED COPY OF THE TIMETABLE.
LLLLLLLL = 8 CHARACTERS USE DOT* AT CROSSINGS, AND USE MP* AT WAYSIDE AND HBD SITES. FILL WITH PRECEDING DASHES AS REQUIRED.
THE MP* MUST USE A DECIMAL POINT TO SEPARATE NUMBERS.
AA = 2 CHARACTER STATE NAME FOR CROSSINGS.
AA = 'WD' FOR WAYSIDE LOCATIONS, AA = 'HB' FOR HBD SITES.
MUST BE 14 CHARACTERS LONG, NO SPACES ALLOWED.

SITE IDENTIFIER: SSSSLLLLLLLLAA	0001-174001MIL
SIGNAL STRENGTH dBm	
CARRIER ID	
FIRMWARE VERSION	2.3.12
SERIAL NUMBER	03-03199-2801-00
CONFIGURATION NET	MICROBURST
SIGNAL STATUS	GOOD
SCADANET STATUS	GOOD
SILENCE INTERVAL	60 MINUTES
HEALTHCHECK INTERVAL	EVERY 2 DAYS
ALARM DEFER DELAY	240 MINUTES (4 HOURS)
OPERATION TO RESUME:	RUN
CALIBRATION CONSTANT	
CH4	
POWER SOURCE	

FIELD PROVIDES: SAMPLED NOMINAL VOLTAGES, SCADANET STATUS CALIBRATION CONSTANTS, SERIAL NUMBER, AND SIGNAL STATUS.

CHANNEL SETUP - NON-STANDARD CONFIGURATION

CHANNEL NORMAL STATE	SENSE (NO/NC)	NAME FUNCTION	RECOGNITION DELAY SECONDS ACTIVE	RECOGNITION DELAY SECONDS NORMAL	RETURN TO NORMAL	REPORTING MODE	ALARM LINKED CHANNEL	ALARM LINKED CRITERIA	EVENT LOGGING ENABLED OPTIONS
POWER FAIL (CH5) ■	POWER FAIL DETECT NO	PFin-PK AC POWER FAIL	7,200 ALARM	300 NORMAL	ENABLED	ALERT	DISABLED	N/A	
CH1 □	DIGITAL INPUT NO	CH1-XR XR DOWN TO LONG	1,800 ALARM	1 NORMAL	ENABLED	ALERT	DISABLED	N/A	
CH2 ■	DIGITAL INPUT NC	CH2-ISL ISLONLY ISLAND OCCUPIED DAX, PREEMPT WARNING TIME	1 ACTIVE	1 NORMAL	DISABLED	STATUS ONLY	DISABLED	N/A	
CH3 ■	DIGITAL INPUT NC	CH3-ISL ISLAND OCCUPIED DAX, PREEMPT WARNING TIME	1 ACTIVE	1 NORMAL	DISABLED	STATUS ONLY	DISABLED	N/A	DIGITAL EVENTS
CH4 STORED NOMINAL VOLTAGE	ANALOG INPUT N/A	CH4-BA/V BATTERY MONITOR BATTERY LOW	300 ALARM	300 NORMAL	DISABLED	ALERT W/UPDATE	DISABLED	N/A	CH1-XR CH2-ISL CH3-ISL
POWER SOURCE (CH6)	ANALOG INPUT N/A	PS-BA/V BATTERY MONITOR BATTERY LOW	300 ALARM	300 NORMAL	DISABLED	ALERT W/UPDATE	DISABLED	N/A	

ANALOG CHANNEL	USEFUL RANGE VOLTS LOW	USEFUL RANGE VOLTS HIGH	DISPLAYED RANGE VOLTS LOW	DISPLAYED RANGE VOLTS HIGH	RELATIVE ALARM POINT LOW	RELATIVE ALARM POINT HIGH	ABSOLUTE ALARM POINT LOW	ABSOLUTE ALARM POINT HIGH	AUTOMATIC UPDATE INTERVAL	STORED NOMINAL VOLTAGE	SAMPLED NOMINAL VOLTAGE
CH4	0.0	30.00	0.0	30.00	81%	120%	10.0	28.0	10 DAYS	13.35	
POWER SOURCE	0.0	30.00	0.0	30.00	81%	120%	10.0	28.0	10 DAYS	15.96	
RELAY OUTPUT	NAME RLY-OUT		ACTIVE SET-UP-OPEN		NORMAL CLR-DN-CLOSE		PULSE DURATION		15 SECONDS	CHARTS REV'D 9-20-02	

MAINTENANCE OPERATIONS

TO START OR ABORT ANY PROCEDURE

1. PRESS THE 'CANCEL' BUTTON FIRST

WHEN RESPONDING TO A CALL, PUT THE CRTU IN THE 'SILENCE ALARMS' MODE

1. PRESS 'SELECT' AND THEN '+ ARROW' BUTTON UNTIL
   DISPLAY: ACTION? SILENCE ALARMS
2. PRESS THE 'SELECT' BUTTON TWICE
3. CORRECT PROBLEM AND SIMULATE NORMAL TRAIN MOVEMENT THROUGH THE LOCATION
4. EXAMINE EACH CHANNEL ON THE CRTU
5. PRESS THE '+/- ARROW' BUTTON
   VERIFY ALL CHANNELS INDICATE A NORMAL STATE
   NORMAL STATES ARE ON THE CHANNEL SETUP CHART

CLEAR TIMERS, LATCHES AND SEND ALL NORMAL

1. DO STEPS #1 - #5 ABOVE, AND PRESS 'CANCEL'.
2. PRESS 'SELECT' AND THEN '- ARROW' BUTTON UNTIL
   DISPLAY: ACTION? SERVICE MODE
3. PRESS 'SELECT' AGAIN TO RESET TIMERS, AND IF
   DISPLAY: SERVICE MODE ALL NORMAL
4. PRESS 'SELECT' AGAIN TO CLEAR LATCHES, AND SEND ALL NORMAL. SKIP STEPS #5-#6.
5. HOWEVER, IF ALARMS ARE NOT CLEARED;
   DISPLAY: SERVICE MODE ALARMS PENDING/PRESENT
6. PRESS 'CANCEL', CORRECT PROBLEM AND REPEAT STEPS #2 THRU #5 UNTIL ALL NORMAL SENT.

TO CANCEL THE 'SILENCE ALARMS' MODE

1. PRESS 'SELECT' AND THEN '+ ARROW' BUTTON UNTIL
   DISPLAY: ACTION? CANCEL SILENCE
2. PRESS THE 'SELECT' BUTTON AGAIN

EXAMINE & SET BATTERY VOLTAGE NOMINAL VALUE

1. PRESS THE '+ ARROW' OR '- ARROW' BUTTON UNTIL THE DESIRED CHANNEL IS DISPLAYED.
   DISPLAY: PS-BA; 13.83V NORMAL
2. VERIFY THE DISPLAYED READING WITH A DIGITAL VOLTMETER
3. PRESS THE 'SELECT' BUTTON, AND THE CRTU DISPLAY WILL SWITCH BETWEEN CURRENT/SAVED NOMINAL VOLTAGE VALUES.
   DISPLAY: NOMINAL ON #6? (CURRENT) 13.83
   DISPLAY: SAVED NOMINAL 6 (STORED) 12.69
4. PRESS THE 'SELECT' BUTTON AND THE CURRENT OR 'NOMINAL ON' VALUE WILL BE SAMPLED AND STORED AS THE 'SAVED NOMINAL' VALUE
5. VERIFY THE 'NOMINAL ON' AND 'SAVED NOMINAL' VALUES ARE EQUIVALENT, REPEAT STEPS #1 THRU #3 & PRESS THE 'CANCEL' BUTTON.

SETUP FVD-2 REMOVE COVER PLATE

VERIFY FVD-2 DIP SWITCH SETTINGS

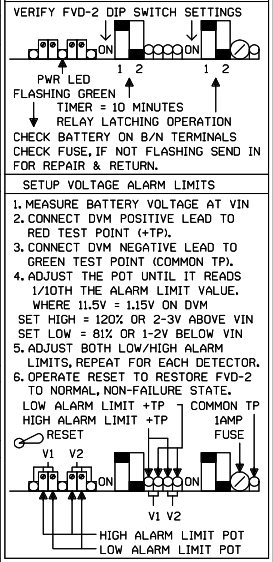

SETUP VOLTAGE ALARM LIMITS

1. MEASURE BATTERY VOLTAGE AT VIN
2. CONNECT DVM POSITIVE LEAD TO RED TEST POINT (+TP).
3. CONNECT DVM NEGATIVE LEAD TO GREEN TEST POINT (COMMON TP).
4. ADJUST THE POT UNTIL IT READS 1/10TH THE ALARM LIMIT VALUE. WHERE 11.5V = 1.15V ON DVM
   SET HIGH = 120% OR 2-3V ABOVE VIN
   SET LOW = 81% OR 1-2V BELOW VIN
5. ADJUST BOTH LOW/HIGH ALARM LIMITS, REPEAT FOR EACH DETECTOR.
6. OPERATE RESET TO RESTORE FVD-2 TO NORMAL, NON-FAILURE STATE.

MAYWOOD, ILLINOIS
9TH AVE.
M.P. 10.70
GENEVA SUBDIVISION
D.O.T.#174 001M

5	10-29-07	REV. 9-23-08 INSTALLED CROSSING CONTROLLER CARDS TO EXISTING GCP 4000 AT 9TH AVENUE. REC. #15247 6-2-08 RLT TH/WITT/CTC/RDD	REV. 9-23-08 REPLCAED HXP-1 WITH A GCP 4000 AT 9TH AVENUE M.P. 10.70 W.O. #60735 REC. #15247 6-2-08 RLT TH/WITT/CTC/RDD	REV. 6-24-04 REMOVED ST TRACK REC. #7333 5-25-04 TJ/WITT	REV. 5-20-03 INSTALLED CRTU AT M.P. 10.37 W.O. #3327 REC. #9213 4-10-03 JJO/WITT/WITT/EML	MODIFICATION LEVEL		UNION PACIFIC QUALITY PRODUCTIVITY SAFETY SIGNAL DESIGN	DES: WITT IND	UNION PACIFIC RAILROAD CHICAGO, ILLINOIS TO CLINTON, IOWA C.T.C. CIRCUITS	DATE 11-01-01
M.P. 10.17 A.F.E. 85551						Q.A. LAST LEVEL CHK'D.			DIG: WITT IND		SHEET 1
/ /CTC/JJF						LAST LEVEL MOD. THIS TYP.			CHK: EML		DWG 10.70
						LAST LEVEL BY DESIGNER.			A.F.E.		
						CHANGED FROM TYP.? Y/N			ID= GEN01070.1X	Office of Sr.AVP Engineering - Signal/TCO OMAHA NEBR.	GEN

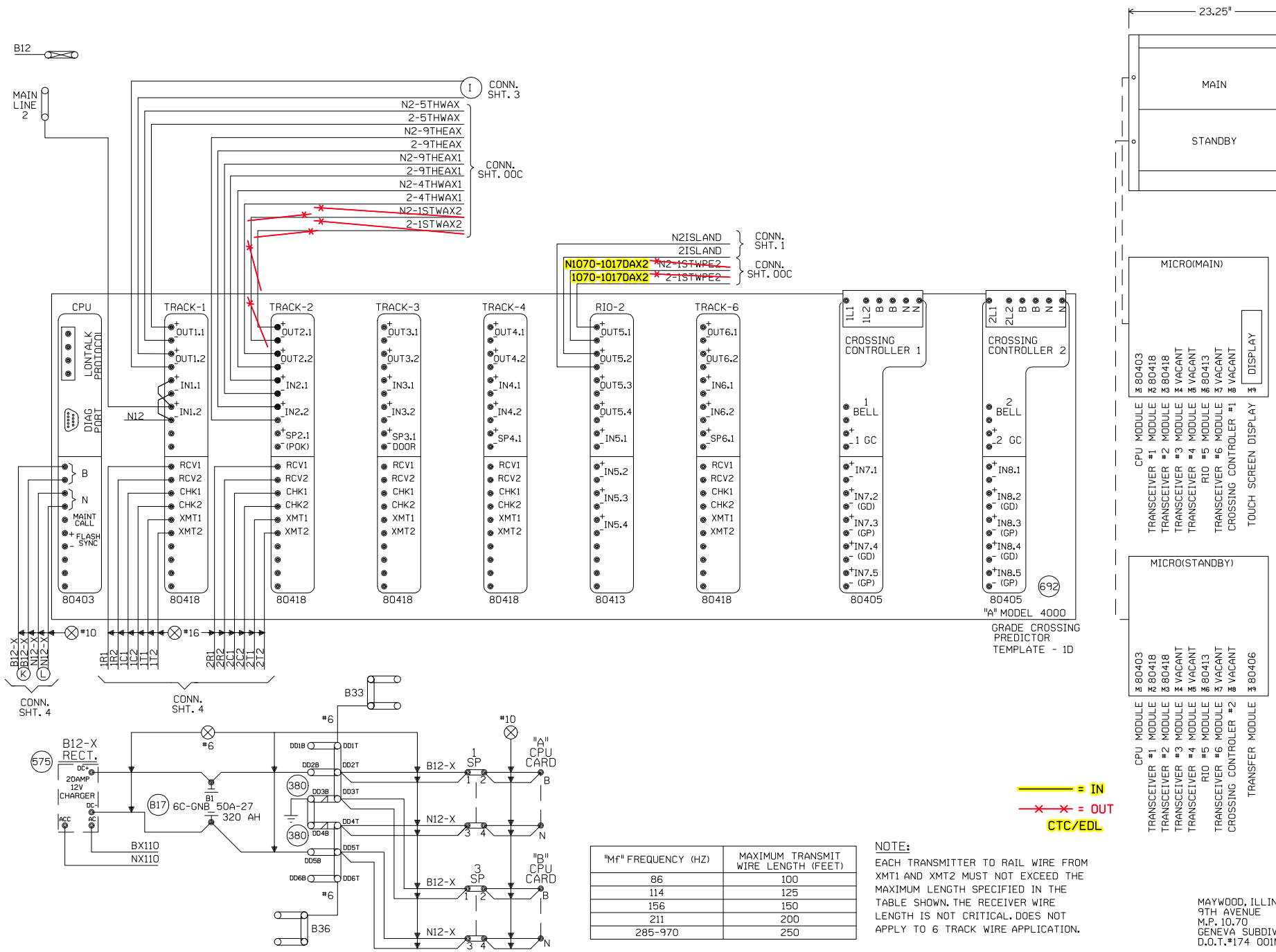

"Mf" FREQUENCY (HZ)	MAXIMUM TRANSMIT WIRE LENGTH (FEET)
86	100
114	125
156	150
211	200
285-970	250

NOTE:
EACH TRANSMITTER TO RAIL WIRE FROM XMT1 AND XMT2 MUST NOT EXCEED THE MAXIMUM LENGTH SPECIFIED IN THE TABLE SHOWN. THE RECEIVER WIRE LENGTH IS NOT CRITICAL. DOES NOT APPLY TO 6 TRACK WIRE APPLICATION.

MAYWOOD, ILLINOIS
9TH AVENUE
M.P. 10.70
GENEVA SUBDIVISION
D.O.T.#174 001M

3	10-29-07	REMOVE ADVANCE PRE-EMPTION AT FIRST AVENUE M.P. 10.17 A.F.E. 85551 JJL / /CTC/JJF
REV. 9-23-08 INSTALLED CROSSING CONTROLLER CARDS TO EXISTING GCP 4000 AT 9TH AVENUE. REC. #15247 6-2-08 RLT TH/WITT/CTC/RDD		
REV. 9-23-08 REPLCAED HXP-1 WITH A GCP 4000 AT 9TH AVENUE M.P. 10.70 W.O. #60735 REC. #15247 6-2-08 RLT TH/WITT/CTC/RDD		

MODIFICATION LEVEL	
Q. A. LAST LEVEL CHECKED	DM
LAST LEVEL MOD THIS TYPICAL	DM
LAST LEVEL BY DESIGNER	DM
CHANGED FROM TYPICAL?	Y

REV 02.01.06 4K 4TKB4GF.4

UNION PACIFIC
QUALITY PRODUCTIVITY SAFETY
SIGNAL DESIGN

DES: CTC
DIG: CTC
CHK: RLT
A.F.E.
ID= GEN01070.2X

UNION PACIFIC RAILROAD

CHICAGO, ILLINOIS
TO CLINTON, IOWA
C.T.C. CIRCUITS

Office of Sr.AVP Engineering - Signal/TCO Omaha, Nebraska

DATE 09-07-05
SHEET 2
DWG 10.70
GEN

Minimum Program Steps Report

Location and SIN

DOT Number: 174001M
Milepost Number: 10.70
Site Name: 9th Ave UP Tk2 (South)

SIN: 700000000000 *

* Parameter is part of office check number calculation.

MCF and Template Selection

MCF Name: GCP_T6X_01_1.mcf
MCF Revision: 011
MCFCRC: 5561E572

Template = MTF_1D: 6 Uni *

* Parameter is part of office check number calculation.

Minimum Program Steps

TEMPLATE: module configuration
Track 5/RIO 1 Slot = RIO *
SSCC 1 Slot = Not Used *
SSCC 2 Slot = Not Used *

TEMPLATE: track 1-Uni, Island
Track 1 : GCP Frequency = 525 Hz
Track 1 : Approach Distance = 1226 ft See Plans
Track 1 : Prime Warning Time = 26 sec *
Track 1 : Prime UAX = IP *
Track 1 : Isl Frequency = 13.2 kHz
Track 1 : Island Distance = 126 ft Verify in Field

TEMPLATE: track 2-Uni,No Island
Track 2 : GCP Frequency = 212 Hz
Track 2 : Approach Distance = 3420 ft Verify in Field
Track 2 : Prime Warning Time = 26 sec *
Track 2 : Uni/Bi/Sim-Bidirnl = Sim. Bidirnl *

TEMPLATE: track 2 Daxes
Track 2 : Dax A Used = Yes *
Track 2 : Dax A Warning Time = 40 sec *
Track 2 : Dax A Offset Distance = 1282 ft Verify in Field
Track 2 : Dax B Used = Yes *
Track 2 : Dax B Warning Time = 40 sec *
Track 2 : Dax B Offset Distance = 1623 ft Verify in Field
Track 2 : Dax C Used = Yes *
Track 2 : Dax C Warning Time = 40 sec *
Track 2 : Dax C Offset Distance = 2626 ft Verify in Field

TEMPLATE: OP assignment 1
OUT 1.1 = T2 Dax A *
OUT 1.2 = AND 1 XR *
OUT 2.1 = T2 Dax C *
OUT 2.2 = T2 Dax B *

TEMPLATE: OP assignment 2
OUT 5.1 = T2 Dax D *
OUT 5.2 = T1 Island *

TEMPLATE: IP assignment 1
IN 1.1 = T2 Out Of Service *
IN 1.2 = T1 Out Of Service *
IN 2.1 = T1 Prime UAX *
IN 2.2 = T1 Prime UAX *

PREDICTORS: track 2
Track 2 : Dax D Used = Yes *

GCP: track 1 MS Control
Track 1 : Island Routes = Isl 1 *

GCP: track 2
Track 2 : GCP Freq Category = Offset *

GCP: track 2 Dax D
Track 2 : Dax D Warning Time = 46 sec *
Track 2 : Dax D Offset Distance = 2626 ft *

ISLAND: track 1
Track 1 : Pickup Delay = 4 sec *

ADVANCED: out of service
Out Of Service Timeout = No *
Out Of Service IPs Used = Yes *

SITE: programming
Password Access = On *

* Parameter is part of office check number calculation.

Check Numbers

Office Check Number: 1A9A01FB
Config. Check Number: 6EDF4C0D
(Based on MCF Revision 011)

Parameters not part of office check number calculation:

Track 1 : GCP Frequency = 525 Hz
Track 1 : Approach Distance = 1226 ft See Plans
Track 1 : Isl Frequency = 13.2 kHz
Track 1 : Island Distance = 126 ft Verify in Field
Track 2 : GCP Frequency = 212 Hz
Track 2 : Approach Distance = 3420 ft Verify in Field
Track 2 : Dax A Offset Distance = 1282 ft Verify in Field
Track 2 : Dax B Offset Distance = 1623 ft Verify in Field
Track 2 : Dax C Offset Distance = 2626 ft Verify in Field

Comments

<none>

Configuration Package File

Filename: CONFIG-174001Mtk2-2008Sep22.pac
Path: \\Adamserver\c\Dgn\AC08-234\GENEVA SUB_Design_Circuit Plan_10.7_Sheet_542330\PAC FILES\#2\
Date/Time:

"TO BE VOIDED"

MAYWOOD, ILLINOIS
9TH AVENUE
M.P. 10.70
GENEVA SUBDIVISION
D.O.T.#174 001M

3	10-29-07	REV. 9-23-08 INSTALLED CROSSING CONTROLLER CARDS TO EXISTING GCP 4000 AT 9TH AVENUE. REC. #15247 6-2-08 RLT TH/WITT/CTC/RDD	REV. 9-23-08 REPLCAED HXP-1 WITH A GCP 4000 AT 9TH AVENUE M.P. 10.70 W.O. #60735 REC. #15247 6-2-08 RLT TH/WITT/CTC/RDD	
	M.P. 10.17 A.F.E. 85551			
	/ /CTC/JJF			

NOTE: Actual OFFSET and ISLAND distances must be entered by field personnel.

UNION PACIFIC
QUALITY PRODUCTIVITY SAFETY
SIGNAL DESIGN

DES:
DIG: WITT
CHK:
A.F.E.
ID= GEN01070.2AX

UNION PACIFIC RAILROAD
CHICAGO, ILLINOIS
TO CLINTON, IOWA
C.T.C. CIRCUITS
Office of Sr.AVP Engineering - Signal/TCO Omaha, Nebraska

DATE 9-23-08
SHEET 2A
DWG 10.70
GEN