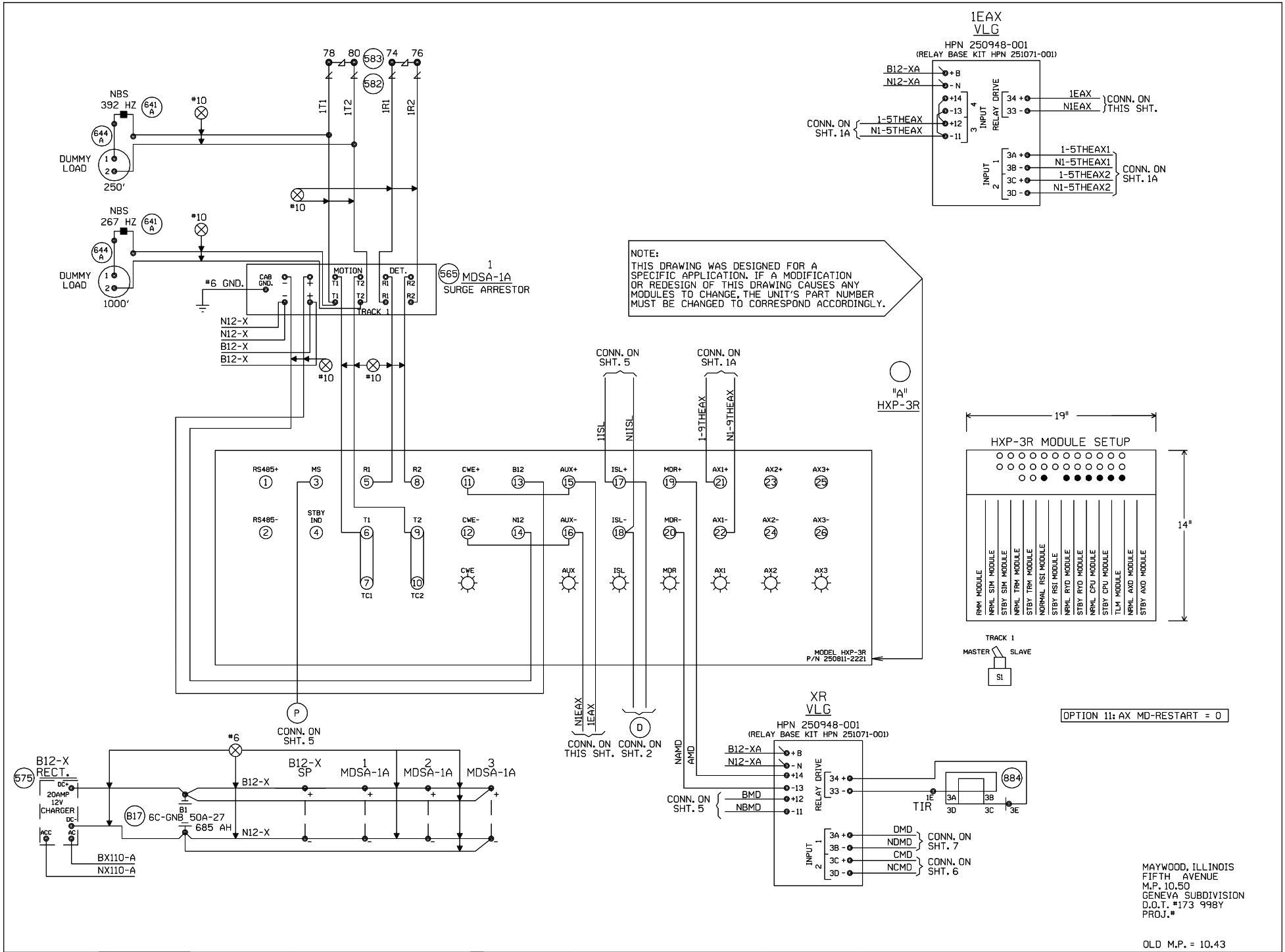

5 10-29-07 M.P. 10.17 A.F.E. 85551 / /CTC/JJF	Revised: 11/30/09 MODIFY TIR CIRCUIT, REMOVE LOD'S AND UPGRADE LIGHTS TO LED'S AT FIFTH AVENUE M.P. 10.50 Req: 15579 WO#: OE Is: 08/28/08 MJD/CTC/ /JJF	3 REV. 09-26-07 M.P.'S CHANGED ON CROSSINGS PER AC. M.P. 10.50 - M.P. 27.54 REC. #14590 06-07-07 JJO/NST/ /	REV. 5-20-03 INSTALLED CRTU AT M.P. 10.50 REC. #9213 4-10-03 JJO/WITT/WITT/EML	1 REV. 2-12-01 HXP AND E.C. UPGRADE PROJECT M.P. 10.00 - 10.50 W.O.33814 10-15-00 JJF CJB/NST/HAR/JNM	MODIFICATION LEVEL		UNION PACIFIC QUALITY PRODUCTIVITY SAFETY SIGNAL DESIGN	DES: HARMON DIG: HARMON CHK: JJF A.F.E. 33814 ID= GEN1050.4X	UNION PACIFIC RAILROAD CHICAGO, ILLINOIS TO CLINTON, IOWA C.T.C. CIRCUITS Office of Sr AVP Engineering - Signal/TCO Omaha, Nebraska	DATE 07-22-99 SHEET 4 DWG 10.50 GEN
					Q.A. LAST LEVEL CHK'D.	CQ				
					LAST LEVEL MOD. THIS TYP.	CK				
					LAST LEVEL BY DESIGNER.	CT				
					CHANGED FROM TYP.? Y/N	Y				

(REV. 6-1-98) (CIRCUIT.TYP)

OLD ID = GEN1043.4

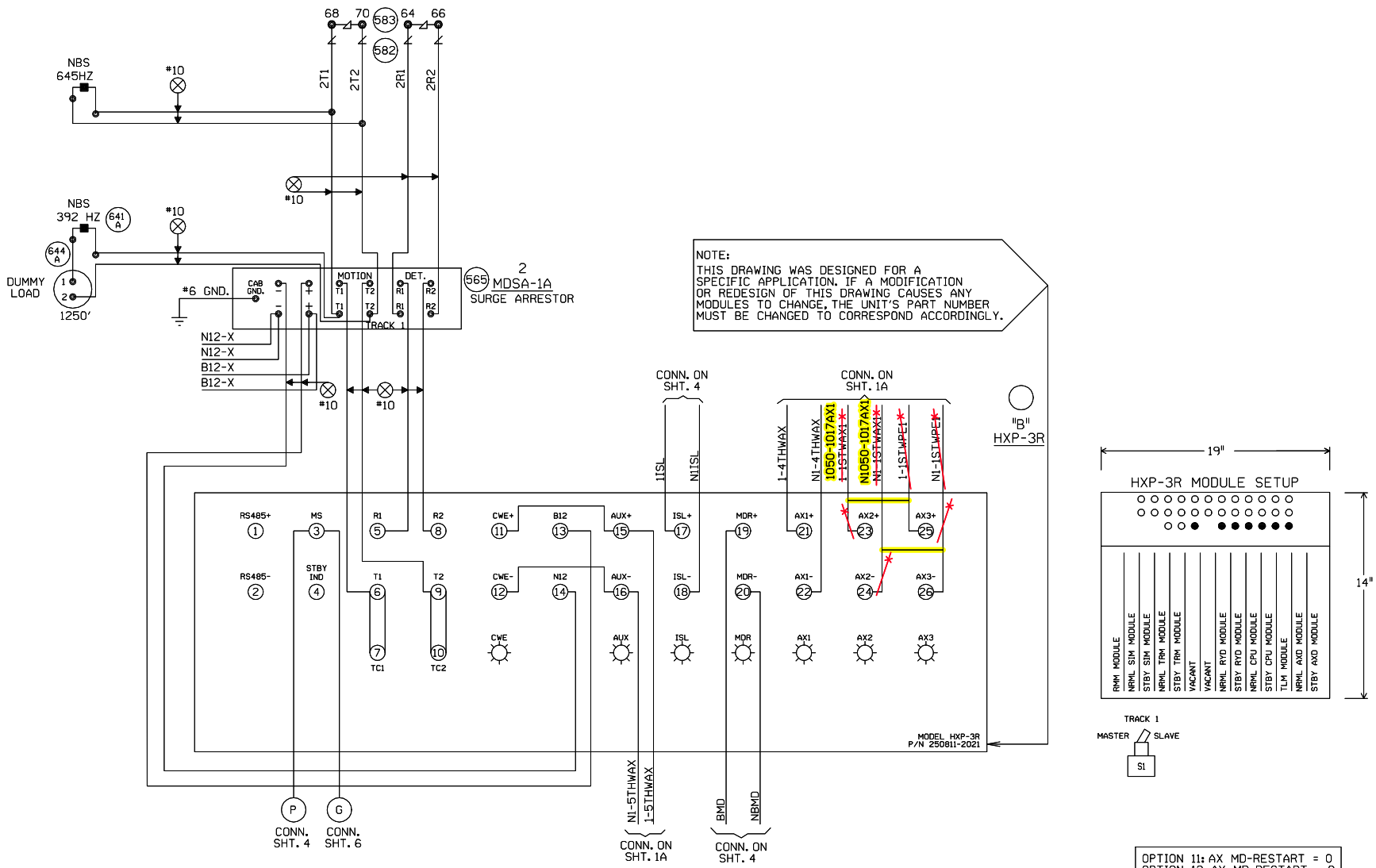

MAYWOOD, ILLINOIS
FIFTH AVENUE
M.P. 10.50
GENEVA SUBDIVISION
D.O.T. #173 998Y
PROJ.#

OLD M.P. = 10.43

5 10-29-07 REMOVE ADVANCE PRE-EMPTION AT FIRST AVENUE M.P. 10.17 A.F.E. 85551 JJL / /CTC/JJF	REV. 9-23-08 REPLCAED HXP-1 WITH A GCP 4000 AT 9TH AVENUE M.P. 10.70 W.O. #60735 REC. #15247 6-2-08 RLT TH/WITT/CTC/RDD	3 REV. 09-26-07 M.P.'S CHANGED ON CROSSINGS PER AC. M.P. 10.50 - M.P. 27.54 REC. #14590 06-07-07 JJO/NST/ /	REV. 5-20-03 INSTALLED 25 SECONDS ADV. PREEMTION AT AT M.P. 10.17 W.O.#39659 REC. #9213 4-10-03 JTB JJO/WITT/GEHH/JNM	1 REV. 2-12-01 HXP AND E.C. UPGRADE PROJECT M.P. 10.00 - 10.50 W.O.33814 10-15-00 JJF CJB/NST/HAR/JNM	MODIFICATION LEVEL		UNION PACIFIC QUALITY PRODUCTIVITY SAFETY SIGNAL DESIGN	DES: HARMON DIG: HARMON CHK: JJF A.F.E. 33814 ID= GEN1050.5X	UNION PACIFIC RAILROAD CHICAGO, ILLINOIS TO CLINTON, IOWA C.T.C. CIRCUITS Office of Sr AVP Engineering - Signal/TCO Omaha, Nebraska	DATE 07-22-99 SHEET 5 DWG 10.50 GEN
					Q.A. LAST LEVEL CHK'D.	CQ			
					LAST LEVEL MOD. THIS TYP.	CK			
					LAST LEVEL BY DESIGNER.	CT			
					CHANGED FROM TYP.? Y/N	Y			

(REV. 6-1-98)(CIRCUIT.TYP)

OLD ID = GEN1043.5

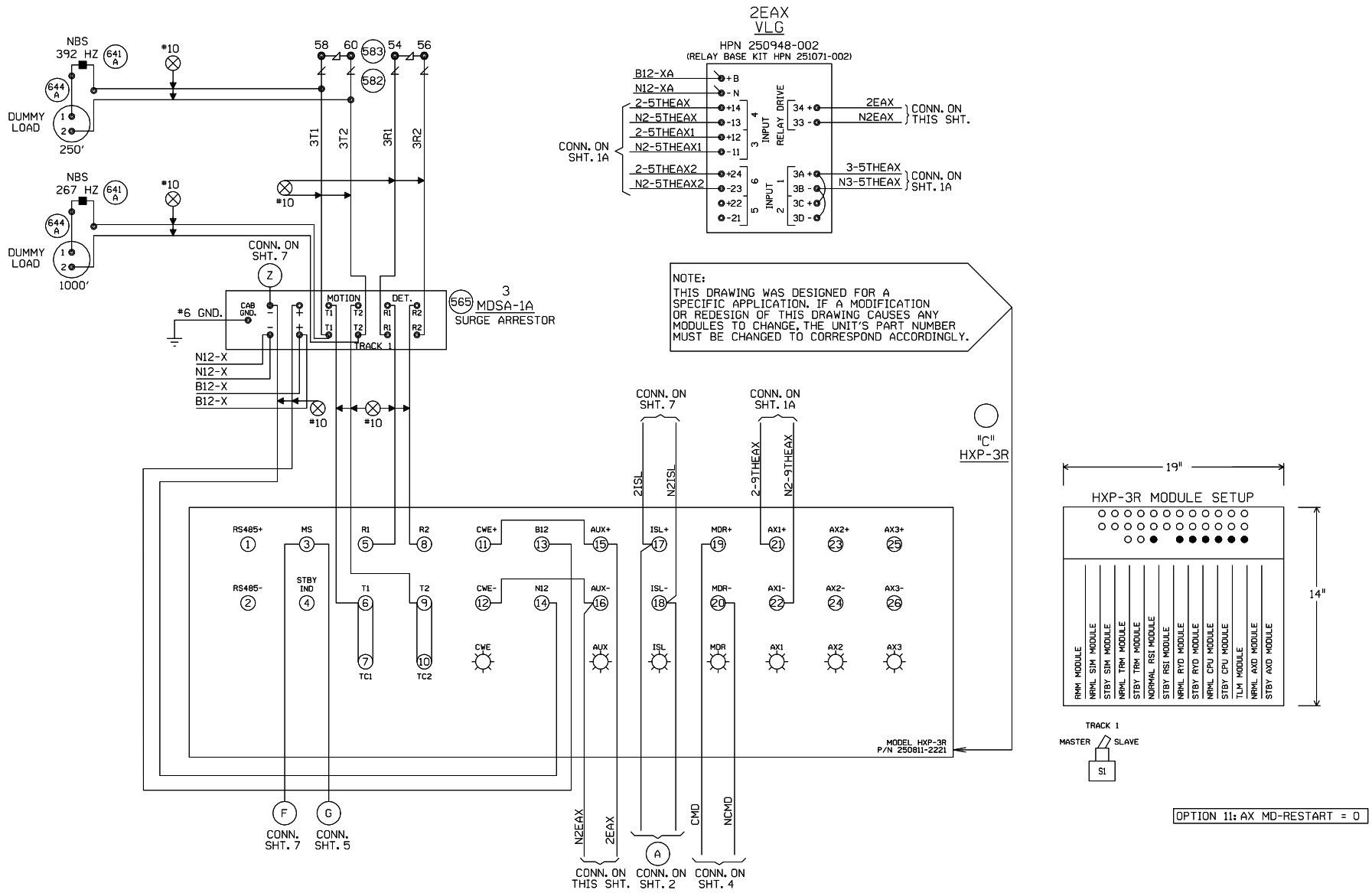

MAYWOOD, ILLINOIS
FIFTH AVENUE
M.P. 10.50
GENEVA SUBDIVISION
D.O.T. #173 998Y
PROJ.#

OLD M.P. = 10.43

4 10-29-07 M.P. 10.17 A.F.E. 85551 / /CTC/JJF	3 REV. 09-26-07 M.P.'S CHANGED ON CROSSINGS PER AC. M.P. 10.50 - M.P. 27.54 REC. #14590 06-07-07 JJO/NST/ /	REV. 5-20-03 INSTALLED 25 SECONDS ADV. PREEMTION AT AT M.P. 10.17 W.O.#39659 REC. #9213 4-10-03 JTB JJO/WITT/GEHH/JNM	1 REV. 2-12-01 HXP AND E.C. UPGRADE PROJECT M.P. 10.00 - 10.50 W.O.33814 10-15-00 JJF CJB/NST/HAR/JNM	MODIFICATION LEVEL		UNION PACIFIC QUALITY PRODUCTIVITY SAFETY SIGNAL DESIGN	DES: HARMON DIG: HARMON CHK: JJF A.F.E. 33814 ID= GEN1050.6X	UNION PACIFIC RAILROAD CHICAGO, ILLINOIS TO CLINTON, IOWA C.T.C. CIRCUITS Office of Sr AVP Engineering - Signal/TCO Omaha, Nebraska	DATE 07-22-99 SHEET 6 DWG 10.50 GEN
				Q.A. LAST LEVEL CHK'D.	CQ				
				LAST LEVEL MOD. THIS TYP.	CK				
				LAST LEVEL BY DESIGNER.	CT				
				CHANGED FROM TYP.? Y/N	Y				

(REV. 6-1-98) (CIRCUIT.TYP)

OLD ID = GEN1043.6

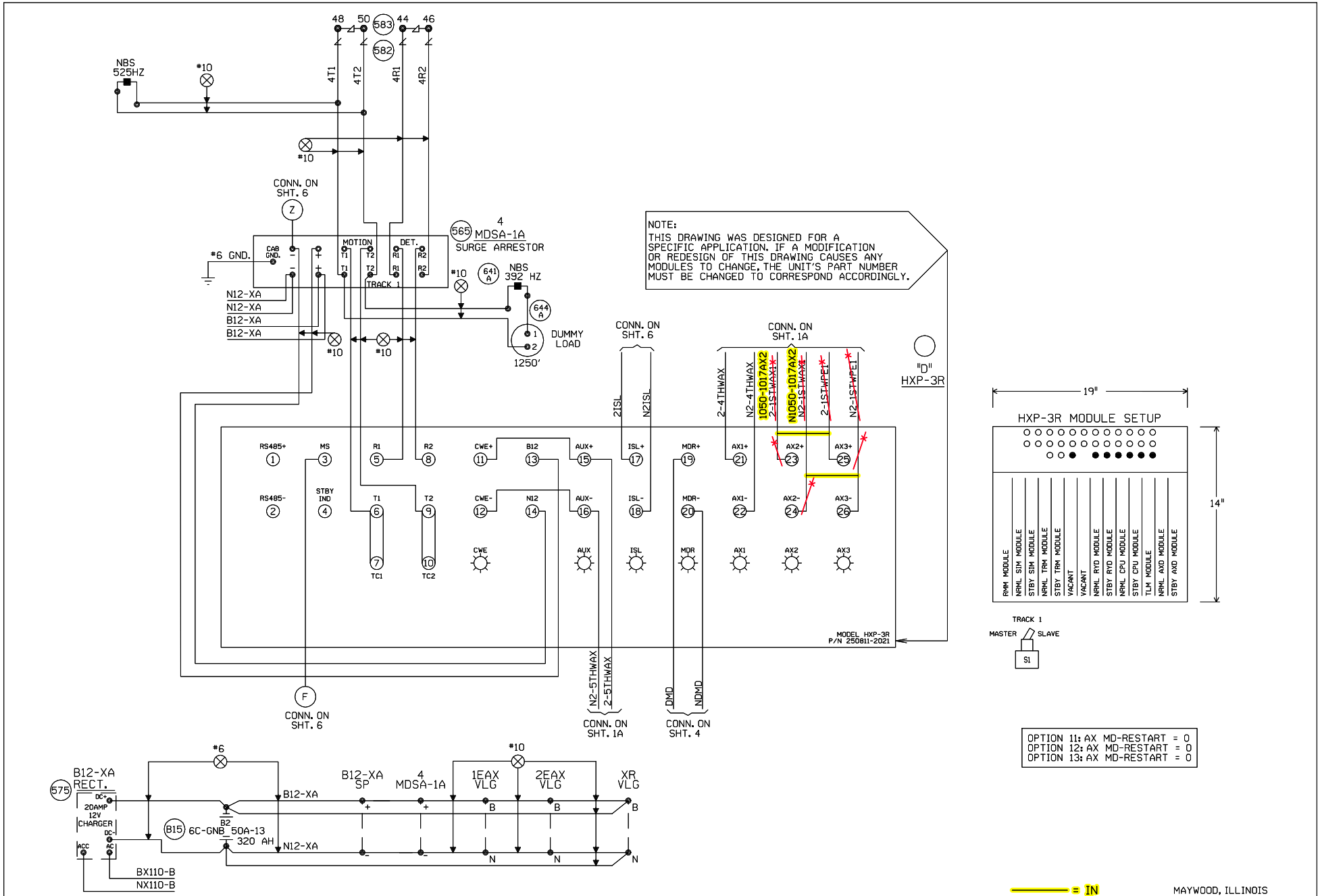

MAYWOOD, ILLINOIS
FIFTH AVENUE
M.P. 10.50
GENEVA SUBDIVISION
D.O.T. #173 998Y
PROJ.#

OLD M.P. = 10.43

6 10-29-07 REMOVE ADVANCE PRE-EMPTION AT FIRST AVENUE M.P. 10.17 A.F.E. 85551 JJF / /CTC/JJF	REV. 9-23-08 INSTALLED CROSSING CONTROLLER CARDS TO EXISTING GCP 4000 AT 9TH AVENUE. REC. #15247 6-2-08 RLT TH/WITT/CTC/RDD	4 REV. 09-26-07 M.P.'S CHANGED ON CROSSINGS PER AC. M.P. 10.50 - M.P. 27.54 REC. #14590 06-07-07 JJO/NST/ /	REV. 5-20-03 INSTALLED CRTU AT M.P. 10.50 REC. #9213 4-10-03 JJO/WITT/WITT/EML	REV. 5-20-03 INSTALLED 25 SECONDS ADV. PREEMTION AT AT M.P. 10.17 W.O.#39659 REC. #9213 4-10-03 JTB JJO/WITT/GEHH/JNM	1 REV. 2-12-01 HXP AND E.C. UPGRADE PROJECT W.O.33814 10-15-00 JJF CJB/NST/HAR/JNM	MODIFICATION LEVEL		UNION PACIFIC QUALITY PRODUCTIVITY SAFETY SIGNAL DESIGN	DES: HARMON	UNION PACIFIC RAILROAD CHICAGO, ILLINOIS TO CLINTON, IOWA C.T.C. CIRCUITS	DATE 07-22-99
						Q.A. LAST LEVEL CHK'D.	CQ		DIG: HARMON		SHEET 7
						LAST LEVEL MOD. THIS TYP.	CK		CHK: JJF		DWG 10.50
						LAST LEVEL BY DESIGNER.	CT		A.F.E. 33814		
						CHANGED FROM TYP.? Y/N	Y		ID= GEN1050.7X	Office of Sr AVP Engineering - Signal/TCO Omaha, Nebraska	GEN

(REV. 6-1-98) (CIRCUIT.TYP)

OLD ID = GEN1043.7

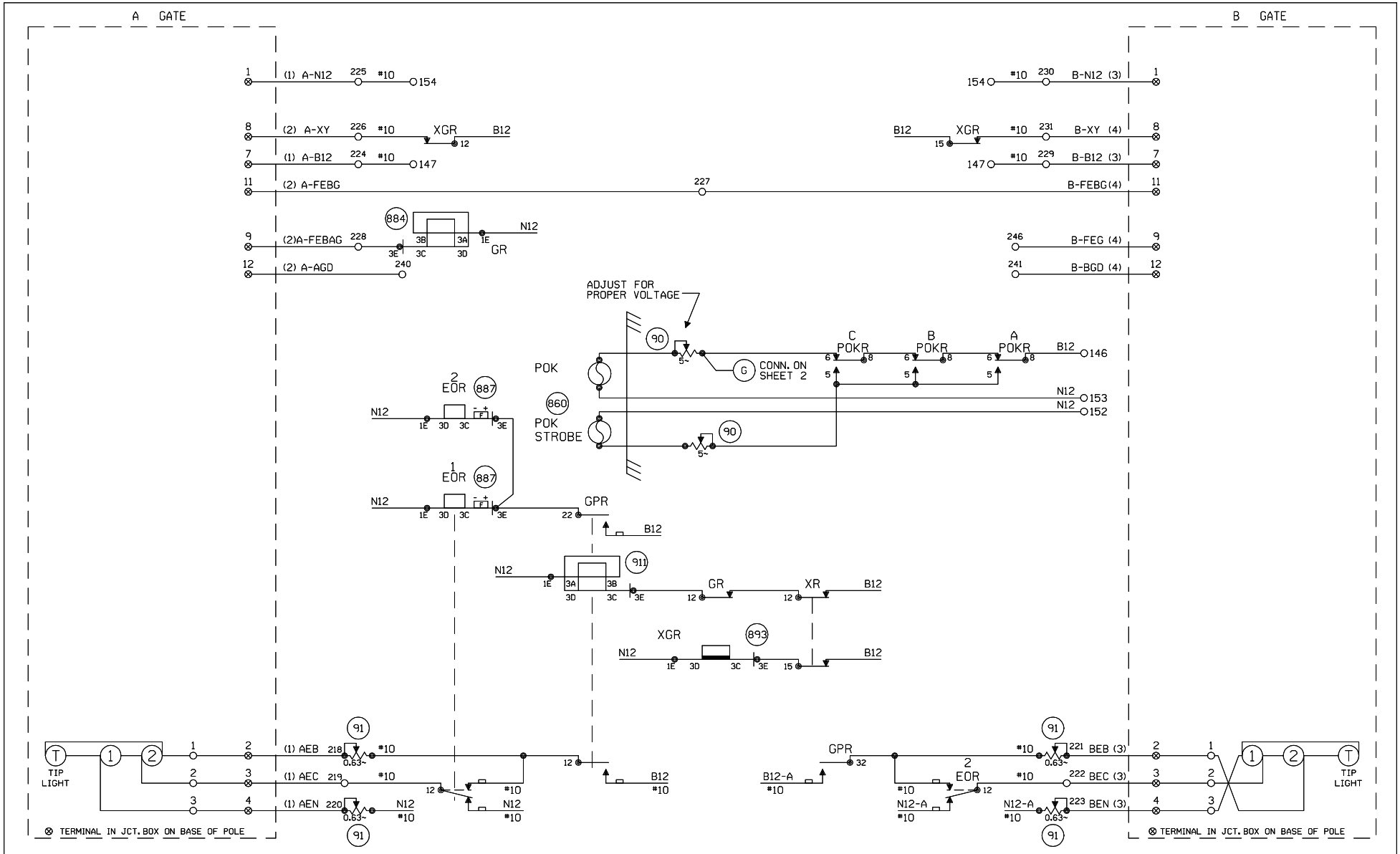

CABLE NO. 1 5C. NO.6 B.T.
CABLE NO. 2 7C. NO.14 B.T.
CABLE NO. 3 5C. NO.6 B.T.
CABLE NO. 4 7C. NO.14 B.T.

MAYWOOD, ILLINOIS
FIFTH AVENUE
M.P. 10.50
GENEVA SUBDIVISION
D.O.T. #173 998Y
PROJ.#
OLD M.P. = 10.43

6 10-29-07 M.P. 10.17 A.F.E. 85551 / /CTC/JJF	Revised: 11/30/09 MODIFY TIR CIRCUIT. REMOVE LOD'S AND UPGRADE LIGHTS TO LED'S AT FIFTH AVENUE M.P. 10.50 Rec#: 15579 WO#: OE 15: 08/28/08 / MJD/CTC/ /JJF	4 REV. 09-26-07 M.P.'S CHANGED ON CROSSINGS PER AC. M.P. 10.50 - M.P. 27.54 REC. #14590 06-07-07 JJO/NST/ /	3 REV. 5-19-06 REMOVED 1 CELL FROM B12 & B12-A BATT PER AC REC#13663 1-5-06 HRB/NST	REV. 5-20-03 INSTALLED CRTU AT M.P. 10.50 REC. #9213 4-10-03 JJO/WITT/WITT/EML	1 REV. 2-12-01 HXP AND E.C. UPGRADE PROJECT M.P. 10.00 - 10.50 W.O.33814 10-15-00 JJF CJB/NST/HAR/JNM	MODIFICATION LEVEL		UNION PACIFIC SAFETY QUALITY PRODUCTIVITY SIGNAL DESIGN	DES: HARMON DIG: HARMON CHK: JJF A.F.E. 33814 ID= GEN1050.8X	UNION PACIFIC RAILROAD CHICAGO, ILLINOIS TO CLINTON, IOWA C.T.C. CIRCUITS Office of Sr AVP Engineering - Signal/TCO Omaha, Nebraska	DATE 07-22-99 SHEET 8 DWG 10.50 GEN
						Q.A. LAST LEVEL CHK'D.	CI				
						LAST LEVEL MOD. THIS TYP.	CK				
						LAST LEVEL BY DESIGNER.	CT				
						CHANGED FROM TYP.? Y/N	Y				

(REV. 7-29-99) (GCTYP.DGN)

OLD ID = GEN1043.8

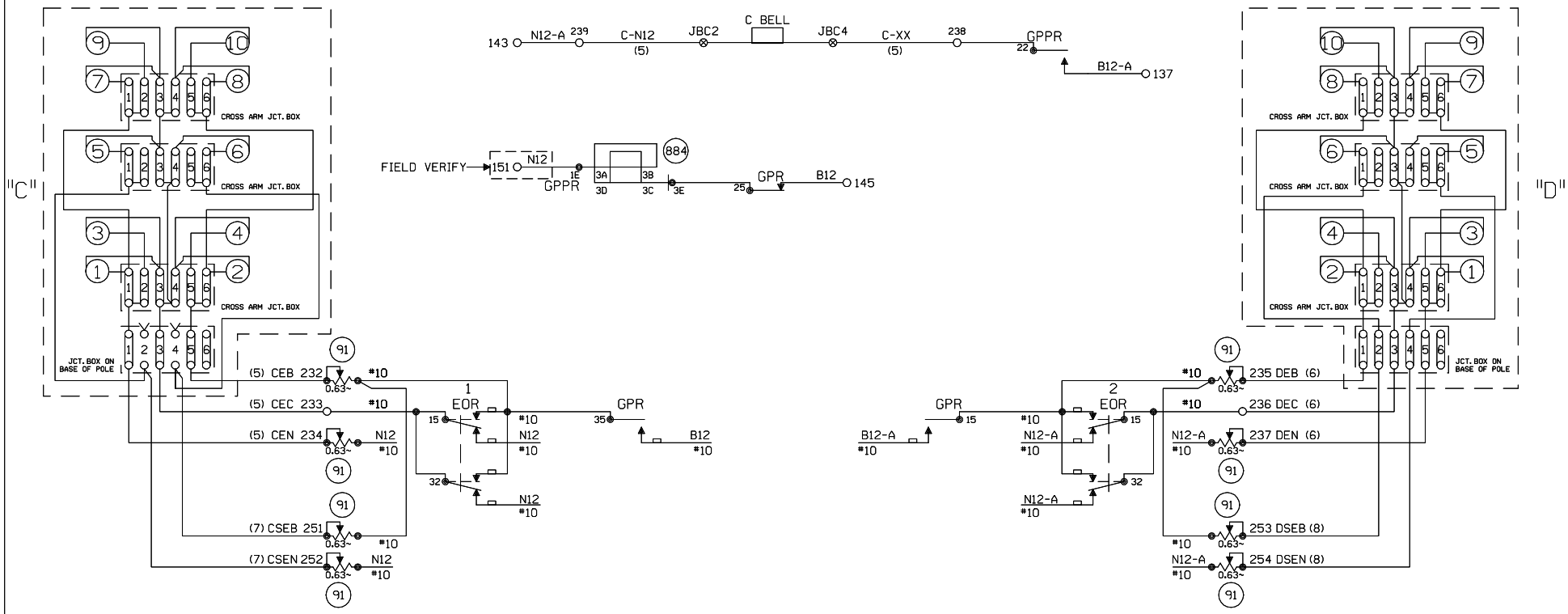

CABLE NO. 5 5C. NO. 6 B.T. TO SIGNAL C
CABLE NO. 6 5C. NO. 6 B.T. TO SIGNAL D
CABLE NO. 7 5C. NO. 6 B.T. TO SIGNAL C
CABLE NO. 8 2C. NO. 6 B.T. TO SIGNAL D

MAYWOOD, ILLINOIS
FIFTH AVENUE
M.P. 10.50
GENEVA SUBDIVISION
D.O.T. #173 998Y
PROJ.#

OLD M.P. = 10.43

4 10-29-07 M.P. 10.17 A.F.E. 85551 / /CTC/JJF	Revised: 11/30/09 MODIFY TIR CIRCUIT, REMOVE LOD'S AND UPGRADE LIGHTS TO LED'S AT FIFTH AVENUE M.P. 10.50 Rec#: 15579 WO#: OE IS: 08/28/08 MJD/CTC/ /JJF	2 REV. 09-26-07 M.P.'S CHANGED ON CROSSINGS PER AC. M.P. 10.50 - M.P. 27.54 REC. #14590 06-07-07 JJO/NST/ /	1 REV. 2-12-01 HXP AND E.C. UPGRADE PROJECT M.P. 10.00 - 10.50 W.O.33814 10-15-00 JJF CJB/NST/HAR/JNM	MODIFICATION LEVEL		UNION PACIFIC QUALITY PRODUCTIVITY SAFETY SIGNAL DESIGN	DES: HARMON DIG: HARMON CHK: JJF A.F.E. 33814 ID= GEN1050.9X	UNION PACIFIC RAILROAD CHICAGO, ILLINOIS TO CLINTON, IOWA C.T.C. CIRCUITS Office of Sr AVP Engineering - Signal/TCO Omaha, Nebraska	DATE 07-22-99 SHEET 9 DWG 10.50 GEN
				Q.A. LAST LEVEL CHK'D.	CQ				
				LAST LEVEL MOD. THIS TYP.	CP				
				LAST LEVEL BY DESIGNER.	CT				
				CHANGED FROM TYP.? Y/N	Y				

(REV. 7-29-99) (CGTYP.DGN)

OLD ID = GEN1043.9

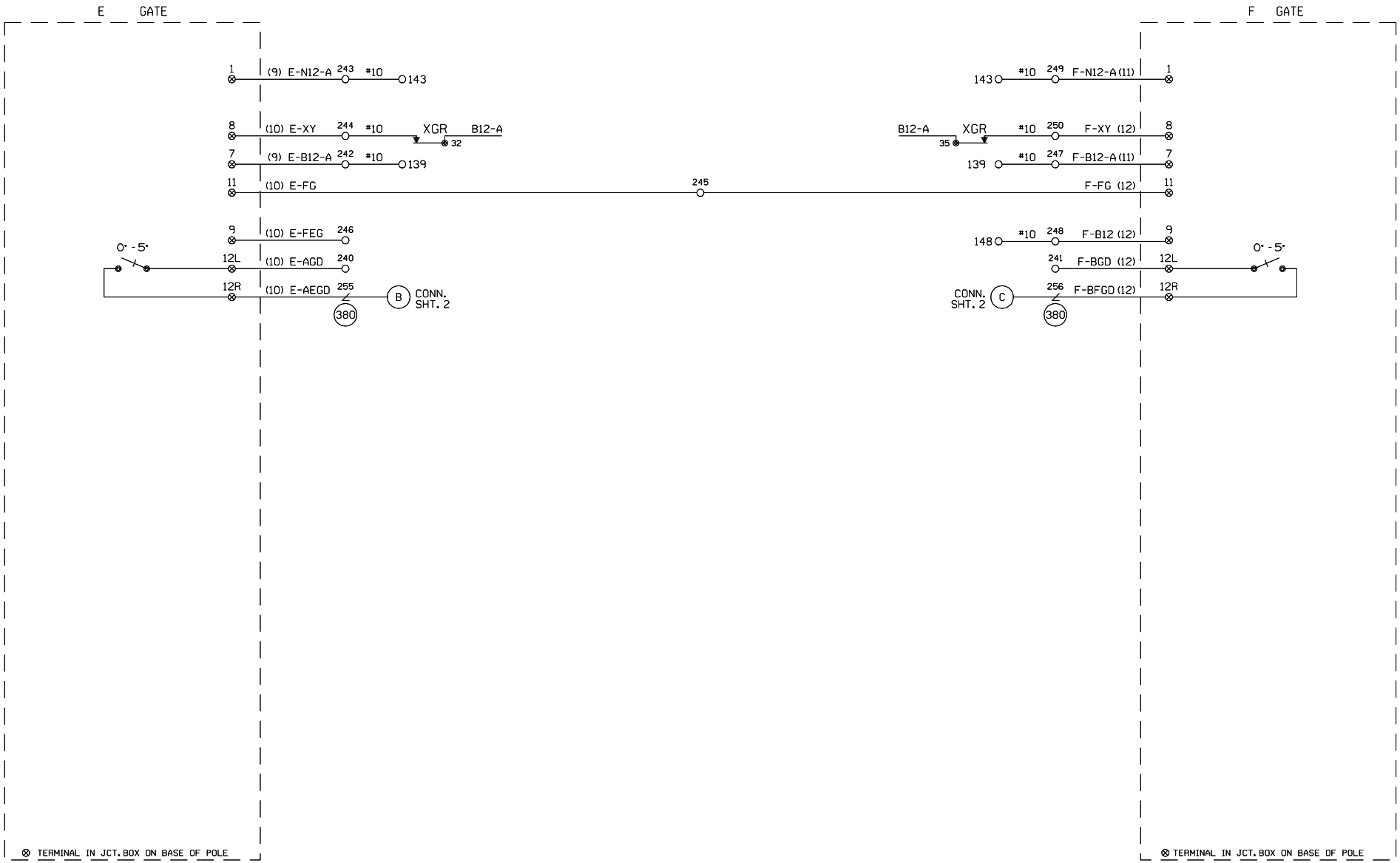

CABLE NO. 9 5C. NO. 6 B.T.
CABLE NO. 10 7C. NO. 14 B.T.
CABLE NO. 11 5C. NO. 6 B.T.
CABLE NO. 12 7C. NO. 14 B.T.

MAYWOOD, ILLINOIS
FIFTH AVENUE
M.P. 10.50
GENEVA SUBDIVISION
D.O.T. #173 998Y
PROJ.#

OLD M.P. = 10.43

3	10-29-07	M.P.10.17 A.F.E. 85551	/ /CTC/JJF
2	REV. 09-26-07	M.P.'S CHANGED ON CROSSINGS PER AC. M.P. 10.50 - M.P. 27.54 REC. #14590 06-07-07	JJO/NST/ /
1	REV. 2-12-01	HXP AND E.C. UPGRADE PROJECT M.P. 10.00 - 10.50 W.O.33814 10-15-00 JJF	CJB/NST/HAR/JNM

MODIFICATION LEVEL	
Q.A. LAST LEVEL CHK'D.	CI
LAST LEVEL MOD. THIS TYP.	CK
LAST LEVEL BY DESIGNER.	CT
CHANGED FROM TYP.? Y/N	Y

UNION PACIFIC
QUALITY PRODUCTIVITY SAFETY
SIGNAL DESIGN

DES:	HARMON
DIG:	HARMON
CHK:	JJF
A.F.E.	33814
ID=	GEN1050.10X

UNION PACIFIC RAILROAD
CHICAGO, ILLINOIS TO
CLINTON, IOWA
C.T.C. CIRCUITS
Office of Sr AVP Engineering - Signal/TCO Omaha, Nebraska

DATE	07-22-99
SHEET	10
DWG	10.50
	GEN

(REV. 7-29-99) (GCTYP.DGN)

OLD ID = GEN1043.10

SAFTRAN MODEL "EM" (GRISWOLD)

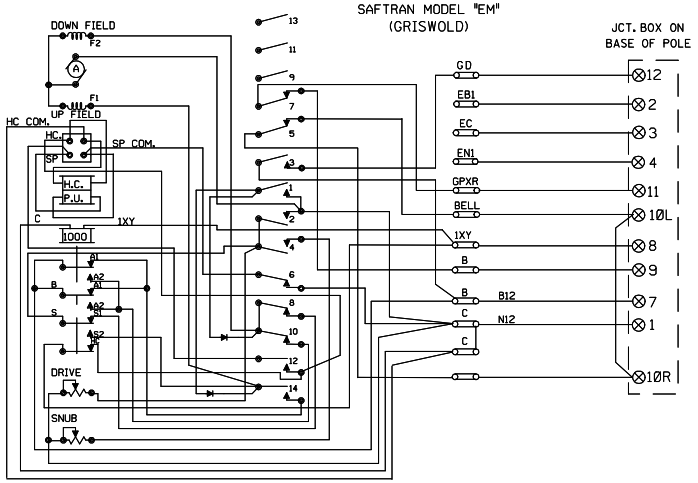

SHOW TYPE MECH. INSTALLED

SPACE NO.	CONTACT OPERATION CLEARING	CONTACT OPERATION RETURNING	CIRCUIT BREAKER FUNCTIONS USE OF CONTACT
1	40°50°85°90°	90°85°50°40°	CONTROL OF ARC SUPRESSING RECTIFIERS
2	0°10°	10°0°	FINAL DOWN SNUB
3	0°5°	5°0°	GATE DOWN
4	0°44°	44°0°	DOWN SNUB
5	10°90°	90°10°	TO CUT OFF BELL WHEN GATE ARM IS DOWN
6	80°90°	90°80°	CONTROL OF SOLENOID PICK UP
7	80°90°	90°80°	TO CONTROL GPR RELAY & KEEP FLASHING LIGHTS OPERATING UNTIL GATES CLEAR
8	0°5°80°90°	90°80°5°0°	UP SNUB
9			SPARE
10	45°90°	90°45°	MOTOR CUTOUT(DOWN)
11			SPARE
12	0°90°	80°0°	OPERATED BY MOTOR CUTOUT SWITCH TO CUT OFF CURRENT FROM SOLENOID PICKUP
13			NO CAM
14	0°90°	80°0°	MOTOR CUTOUT(UP)

W.R.R.S. CO TYPE D NO.3567 GATE MECHANISM

SHOW TYPE MECH. INSTALLED

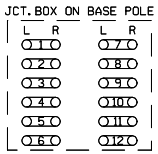

CONT. SPACE NO.	CLEARING (UP) CLOSES	CLEARING (UP) OPENS	RETURNING (DN.) CLOSES	RETURNING (DN.) OPENS	FUNCTION OF CONTACT
1	—	88°	78°	—	UP MOTOR CUTOUT
2	76°	85°	85°	76°	HOLD CLEAR CONTROL
3	50°	—	—	50°	DOWN MOTOR CUTOUT
4	—	5°	5°	—	GATE DOWN
5	—	5°	5°	—	SNUBBING
6	85°			85°	XGCP CONTROL
7	6°	—	—	6°	BELL CONTROL

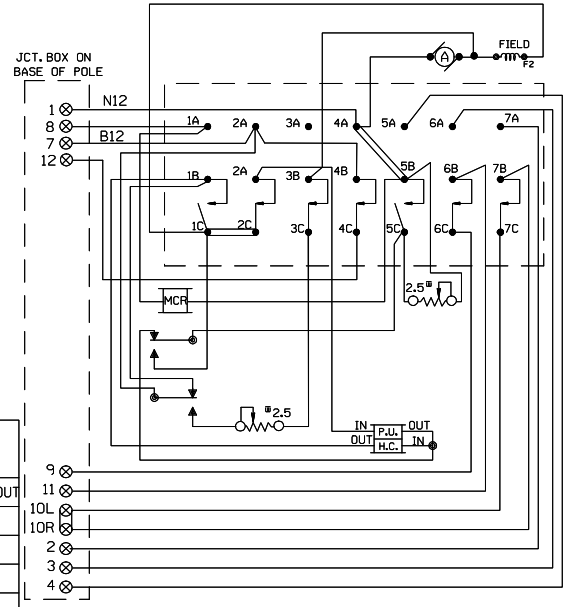

MECHANISM SHOWN IN CLEAR POSITION.

SAFETRAN PRODUCTS MODEL "S" MECHANISM

MOTOR & SNUB RELAY

SHOW TYPE MECH. INSTALLED

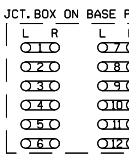

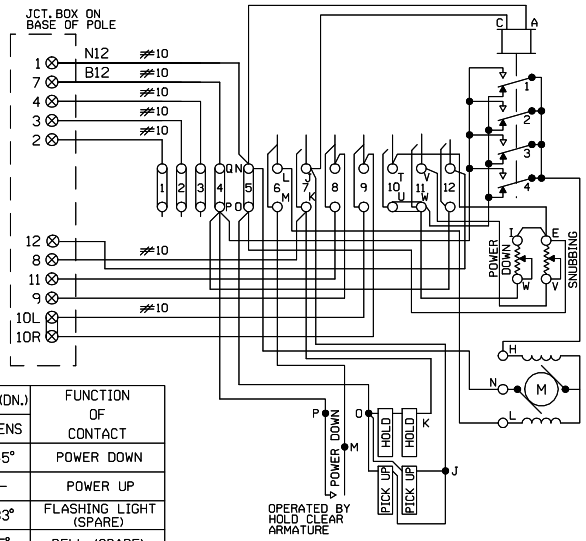

CONT. SPACE NO.	CLEARING (UP) CLOSES	CLEARING (UP) OPENS	RETURNING (DN.) CLOSES	RETURNING (DN.) OPENS	FUNCTION OF CONTACT
6	45°	—	—	45°	POWER DOWN
7	—	89°	89°	—	POWER UP
8	83°	—	—	83°	FLASHING LIGHT (SPARE)
9	5°	—	—	5°	BELL (SPARE)
10	—	5°	5°	—	HORIZONTAL SNUB
11	—	45°	45°	—	DOWN SNUB
12	—	5°	5°	—	GATE DOWN

MECHANISM SHOWN IN CLEAR POSITION.

WCH 3593-E

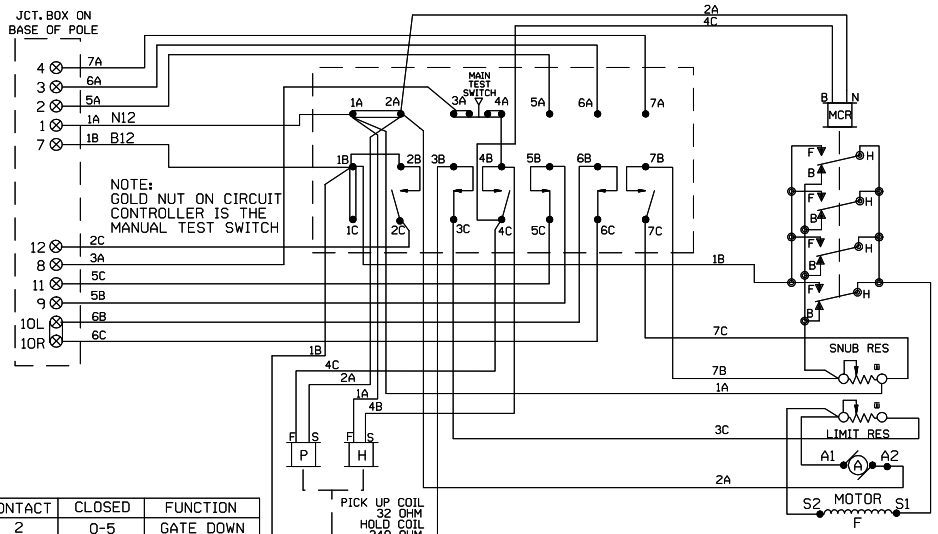

CONTACT	CLOSED	FUNCTION
2	0-5	GATE DOWN
3	45-90	MOTOR DOWN
4	0-89	MOTOR UP
5	86-90	GATE NORM
6	5-90	BELL
7	0-5	SNUB

SHOW TYPE MECH. INSTALLED

MAYWOOD, ILLINOIS
FIFTH AVENUE
M.P. 10.50
GENEVA SUBDIVISION
D.O.T. #173 998Y
PROJ.#

FOR WIRING GATES "A" & "B"

OLD M.P. = 10.43

3	10-29-07	M.P. 10.17 A.F.E. 85551	/ /CTC/JJF
2	REV. 09-26-07	M.P.'S CHANGED ON CROSSINGS PER AC. M.P. 10.50 - M.P. 27.54 REC. #14590 06-07-07	JJO/NST/ /
1	REV. 2-12-01	HXP AND E.C. UPGRADE PROJECT M.P. 10.00 - 10.50 W.O.33814 10-15-00	JJF CJB/NST/HAR/JNM

MODIFICATION LEVEL	
Q.A. LAST LEVEL CHK'D.	CQ
LAST LEVEL MOD. THIS TYP.	CK
LAST LEVEL BY DESIGNER.	CT
CHANGED FROM TYP.? Y/N	N

UNION PACIFIC
QUALITY PRODUCTIVITY SAFETY
SIGNAL DESIGN

DES: HARMON	
DIG: HARMON	
CHK: JJF	
A.F.E. 33814	
ID= GEN1050.11X	

UNION PACIFIC RAILROAD
CHICAGO, ILLINOIS TO
CLINTON, IOWA
C.T.C. CIRCUITS

Office of Sr AVP Engineering - Signal/TCO Omaha, Nebraska

DATE	07-22-99
SHEET	11
DWG	10.50
	GEN

(REV. 6-1-98) (GWIRING.DGN)

OLD ID = GEN1043.11