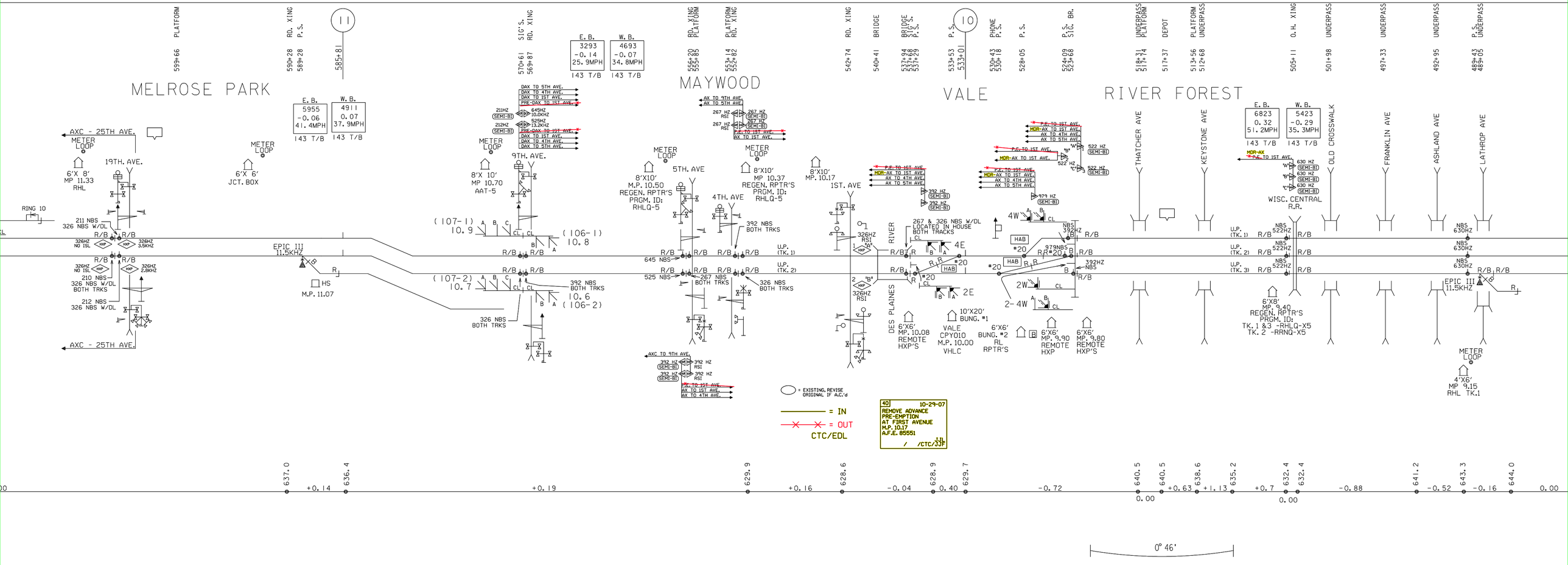
MELROSE PARK
MAYWOOD
VALE
RIVER FOREST
PLATFORM
RD. XING
P.S.
SIG'S.
RD. XING
RD. XING
PLATFORM
PLATFORM
RD. XING
BRIDGE
BRIDGE
SIGS.
P.S.
P.S.
PHONE
P.S.
P.S.
P.S.
SIG. BR.
UNDERPASS
PLATFORM
DEPOT
PLATFORM
UNDERPASS
O.H. XING
UNDERPASS
UNDERPASS
UNDERPASS
UNDERPASS
P.S.
UNDERPASS
599+66
590+28
589+28
585+81
570+61
569+87
556+20
555+85
553+14
552+82
542+74
540+41
537+94
537+48
537+29
533+53
533+01
530+43
530+18
528+05
524+09
523+68
518+31
517+74
517+37
513+56
512+68
505+11
501+98
497+33
492+95
488+43
488+05
E.B. 5955 -0.06 41.4MPH 143 T/B
W.B. 4911 0.07 37.9MPH 143 T/B
E.B. 3293 -0.14 25.9MPH 143 T/B
W.B. 4693 -0.07 34.8MPH 143 T/B
E.B. 6823 0.32 51.2MPH 143 T/B
W.B. 5423 -0.29 35.3MPH 143 T/B
AXC - 25TH AVE.
METER LOOP
19TH. AVE.
6'X 8' MP 11.33 RHL
RING 10
211 NBS 326 NBS W/DL
326HZ NO ISL
326HZ 3.5KHZ
210 NBS 326 NBS W/DL BOTH TRKS
212 NBS 326 NBS W/DL
326HZ 2.8KHZ
EPIC III 11.5KHZ
HS
M.P. 11.07
METER LOOP
6'X 6' JCT. BOX
METER LOOP
8'X 10' MP 10.70 AAT-5
9TH. AVE.
(107-1) 10.9
(106-1) 10.8
(107-2) 10.7
10.6 (106-2)
392 NBS BOTH TRKS
326 NBS BOTH TRKS
645 NBS
525 NBS
267 NBS BOTH TRKS
METER LOOP
8'X10' M.P. 10.50 REGEN. RPTR'S PRGM. ID: RHLQ-5
5TH. AVE
4TH. AVE
METER LOOP
8'X10' MP 10.37 REGEN. RPTR'S PRGM. ID: RHLQ-5
392 NBS BOTH TRKS
326 NBS BOTH TRKS
U.P. (TK. 1)
U.P. (TK. 2)
8'X10' MP. 10.17
1ST. AVE
326HZ RSI
DES PLAINES RIVER
267 & 326 NBS W/DL LOCATED IN HOUSE BOTH TRACKS
4E
2E
6'X6' MP. 10.08 REMOTE HXP'S
VALE CPY010 M.P. 10.00 VHLC
10'X20' BUNG. #1
6'X6' BUNG. #2 RL RPTR'S
4W
2W
2-4W
979NBS
392HZ NBS
6'X6' MP. 9.90 REMOTE HXP
6'X6' MP. 9.80 REMOTE HXP'S
THATCHER AVE
KEYSTONE AVE
OLD CROSSWALK
FRANKLIN AVE
ASHLAND AVE
LATHROP AVE
WISC. CENTRAL R.R.
NBS 522HZ
NBS 630HZ
6'X8' MP 9.40 REGEN. RPTR'S PRGM. ID: TK. 1 & 3 -RHLQ-X5 TK. 2 -RRNQ-X5
EPIC III 11.5KHZ
METER LOOP
4'X6' MP 9.15 RHL TK.1
= EXISTING. REVISE ORIGINAL IF A.C.'d
= IN
= OUT
CTC/EDL
40 10-29-07
REMOVE ADVANCE PRE-EMPTION AT FIRST AVENUE M.P. 10.17 A.F.E. 85551
/ /CTC/JJF
637.0
+0.14
636.4
+0.19
629.9
+0.16
628.6
-0.04
628.9
0.40
629.7
-0.72
640.5
0.00
640.5
+0.63
638.6
+1.13
635.2
+0.7
632.4
0.00
632.4
-0.88
641.2
-0.52
643.3
-0.16
644.0
0.00
0° 46'

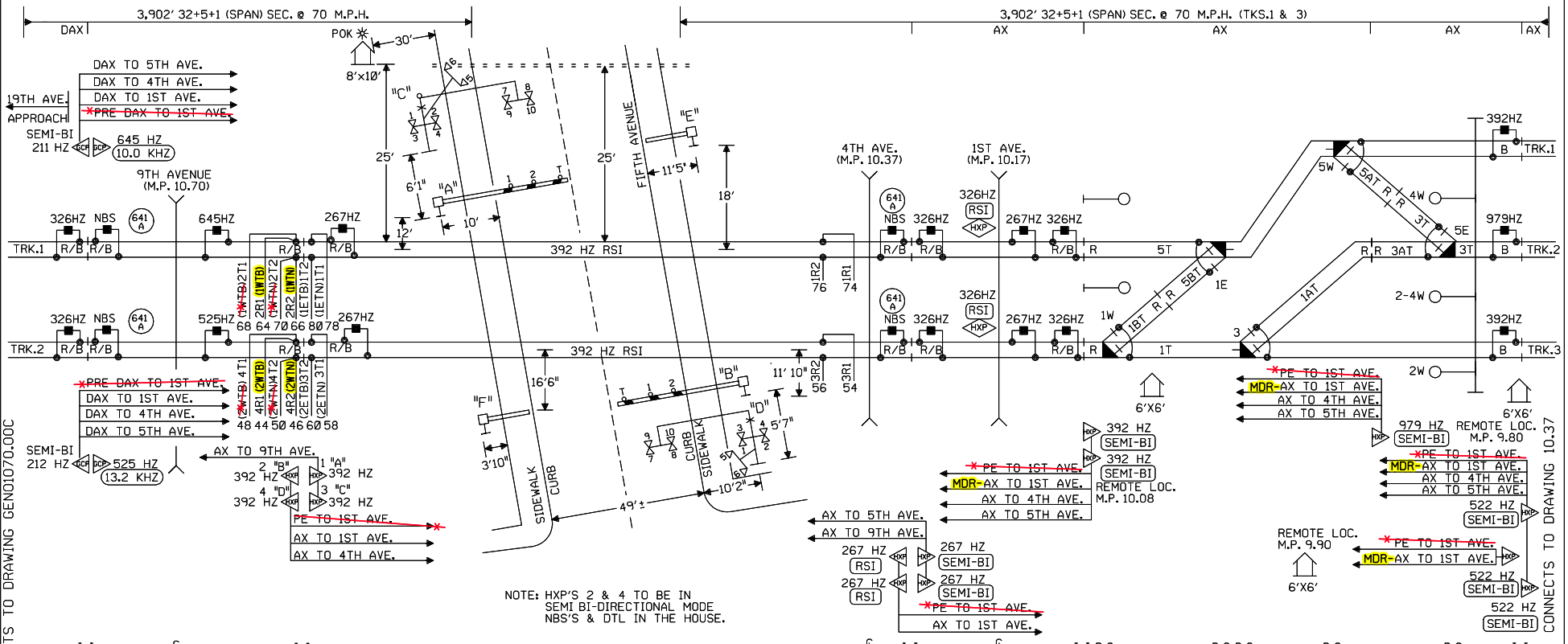

NOTE: HXP'S 2 & 4 TO BE IN SEMI BI-DIRECTIONAL MODE NBS'S & DTL IN THE HOUSE.

NOTES:

⊗ = TWISTED WIRES INSULATED 1 TWIST PER FT. ALL TRACK WIRES 2C. #6

TRANSMITTER AND RECEIVER LEADS TO BE SEPARATED BY AT LEAST 12" IN TRENCH, LENGTHS SHOULD NOT EXCEED MANUFACTURES RECOMMENDATION.

TOP OF FOUNDATION TO BE AT SAME ELEVATION AS THE SURFACE OF THE TRAVELED WAY & NO MORE THAN 4" ABOVE THE SURFACE OF THE GROUND.

ALL BUNGALOW WIRING TO BE #16 AWG FLEX UNLESS OTHERWISE SPECIFIED EXCEPT ALL GROUND WIRE TO BE #6 AWG FLEX OR LARGER.

ALL WIRING IN GATE MECHANISM TO BE #10 "AWG FLEX".

REFER TO UP STANDARD DWG FOR BUNGALOW GROUNDING.

DO NOT USE 7 CELLS OF B12 BATTERY UNLESS REQUIRED TO MAINTAIN MINIMUM LAMP VOLTAGE.

ALL LIGHTS TO BE 12" ROUNDELS.

= = = = = = 4" X ' CONDUIT

LIGHTS: LED LIGHTS

GATE A: '
GATE B: '
CANT C: '
CANT D: '
GATE E: '
GATE F: '

W ◄—○—► E

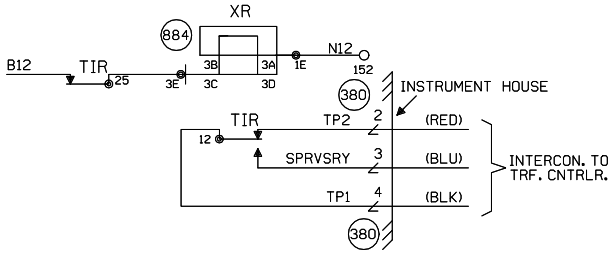

◯ = EXISTING, REVISE ORIGINAL IF A.C.'d

——— = IN

—✕—✕— = OUT

CTC/EDL

9 10-29-07
REMOVE ADVANCE PRE-EMPTION AT FIRST AVENUE M.P. 10.17 A.F.E. 85551
JJL
/ /CTC/JJF

Revised: 11/30/09
MODIFY TIR CIRCUIT, REMOVE LOD'S AND UPGRADE LIGHTS TO LED'S AT FIFTH AVENUE M.P. 10.50
Rec#: 15579 WO#: OE
IS: 08/28/08 /
MJD/CTC/ /JJF

REV. 9-23-08
INSTALLED CROSSING CONTROLLER CARDS TO EXISTING GCP 4000 AT 9TH AVENUE.
REC. #15247
6-2-08 RLT
TH/WITT/CTC/RDD

REV. 9-23-08
REPLCAED HXP-1 WITH A GCP 4000 AT 9TH AVENUE
M.P. 10.70
W.O. #60735
REC. #15247
6-2-08 RLT
TH/WITT/CTC/RDD

5 REV. 09-26-07
M.P.'S CHANGED ON CROSSINGS PER AC.
M.P. 10.50 - M.P. 27.54
REC. #14590
06-07-07
JJO/NST/ /

REV. 12-29-06
INSTALLED 3-WIRE TRAFFIC CONTROL CIRCUIT.
REC. #14320
12-05-06
TAH/WITT

REV. 12-21-04
REVISED FREQ. FOR 1ST AVE. (M.P.10.17)
REC#11973
9-30-04
HM/WITT

REV. 5-20-03
INSTALLED 25 SECONDS ADV. PREEMPTION AT M.P. 10.17
W.O. #39659
REC. #9213
4-10-03 JTB
JJO/WITT/GEHH/JNM

1 REV. 2-12-01
HXP AND E.C. UPGRADE PROJECT
M.P. 10.00 - 10.50
W.O.33814
10-15-00 /JJF
CJB/NST /HAR/JNM

MODIFICATION LEVEL	
Q.A. LAST LEVEL CHK'D.	CI
LAST LEVEL MOD. THIS TYP.	CK
LAST LEVEL BY DESIGNER.	CT
CHANGED FROM TYP.? Y/N	Y

UNION PACIFIC
QUALITY PRODUCTIVITY SAFETY
SIGNAL DESIGN

DES: HARMON
DIG: HARMON
CHK: JJF
A.F.E. 33814
ID= GEN1050.1X

UNION PACIFIC RAILROAD CHICAGO, ILLINOIS TO CLINTON, IOWA C.T.C. CIRCUITS

Office of Sr AVP Engineering - Signal/TCO Omaha, Nebraska

DATE 07-22-99
SHEET 1
DWG 10.50
GEN

MAYWOOD, ILLINOIS
FIFTH AVENUE
M.P. 10.50
GENEVA SUBDIVISION
D.O.T.#173 998Y

OLD M.P. = 10.43

(REV. 6-1-98)(1TKBGC.1)

OLD ID = GEN1043.1

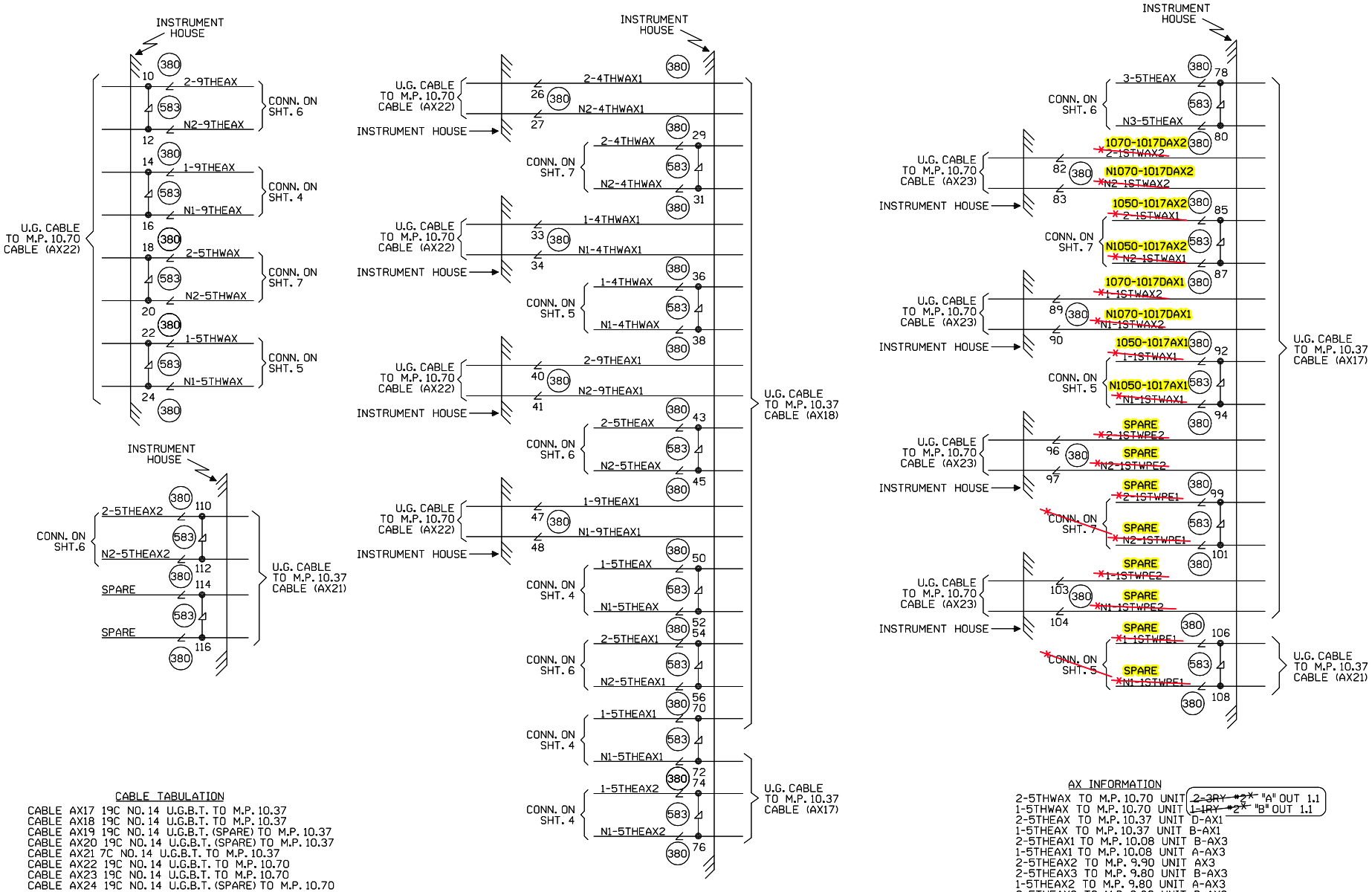

CABLE TABULATION

CABLE AX17 19C NO.14 U.G.B.T. TO M.P. 10.37
CABLE AX18 19C NO.14 U.G.B.T. TO M.P. 10.37
CABLE AX19 19C NO.14 U.G.B.T. (SPARE) TO M.P. 10.37
CABLE AX20 19C NO.14 U.G.B.T. (SPARE) TO M.P. 10.37
CABLE AX21 7C NO.14 U.G.B.T. TO M.P. 10.37
CABLE AX22 19C NO.14 U.G.B.T. TO M.P. 10.70
CABLE AX23 19C NO.14 U.G.B.T. TO M.P. 10.70
CABLE AX24 19C NO.14 U.G.B.T. (SPARE) TO M.P. 10.70

AX INFORMATION

2-5THWAX TO M.P. 10.70 UNIT ~~2-3RY #2~~ "A" OUT 1.1
1-5THWAX TO M.P. 10.70 UNIT ~~1-1RY #2~~ "B" OUT 1.1
2-5THEAX TO M.P. 10.37 UNIT D-AX1
1-5THEAX TO M.P. 10.37 UNIT B-AX1
2-5THEAX1 TO M.P. 10.08 UNIT B-AX3
1-5THEAX1 TO M.P. 10.08 UNIT A-AX3
2-5THEAX2 TO M.P. 9.90 UNIT AX3
2-5THEAX3 TO M.P. 9.80 UNIT B-AX3
1-5THEAX2 TO M.P. 9.80 UNIT A-AX3
2-5THEAX3 TO M.P. 9.80 UNIT B-AX3

= IN
= OUT
CTC/EDL

= EXISTING, REVISE ORIGINAL IF A.C.'d

MAYWOOD, ILLINOIS
FIFTH AVENUE
M.P. 10.50
GENEVA SUBDIVISION
D.O.T. #173 998Y
PROJ.#

OLD M.P. = 10.43

4 10-29-07 REMOVE ADVANCE PRE-EMPTION AT FIRST AVENUE M.P. 10.17 A.F.E. 85551 JJF / /CTC/JJF	3 REV. 09-26-07 M.P.'S CHANGED ON CROSSINGS PER AC. M.P. 10.50 - M.P. 27.54 REC. #14590 06-07-07 JJO/NST/ /	REV. 5-20-03 INSTALLED 25 SECONDS ADV. PREEMPTION AT M.P. 10.17 W.O. #39659 REC. #9213 4-10-03 JTB JJO/WITT/GEHH/JNM	1 REV. 2-12-01 HXP AND E.C. UPGRADE PROJECT M.P. 10.00 - 10.50 W.O.33814 10-15-00 JJF CJB/NST/HAR/JNM	MODIFICATION LEVEL		UNION PACIFIC SIGNAL DESIGN	DES: HARMON	UNION PACIFIC RAILROAD CHICAGO, ILLINOIS TO CLINTON, IOWA C.T.C. CIRCUITS	DATE 07-22-99
				Q.A. LAST LEVEL CHK'D.	CQ		DIG: HARMON		SHEET 1A
				LAST LEVEL MOD. THIS TYP.	CK		CHK: JJF		DWG 10.50
				LAST LEVEL BY DESIGNER.	CT		A.F.E. 33814		
				CHANGED FROM TYP.? Y/N	Y		ID= GEN1050.1AX	Office of Sr AVP Engineering - Signal/TCO Omaha, Nebraska	GEN

(REV. 6-1-98) (CIRCUIT.TYP)

OLD ID = GEN1043.1A

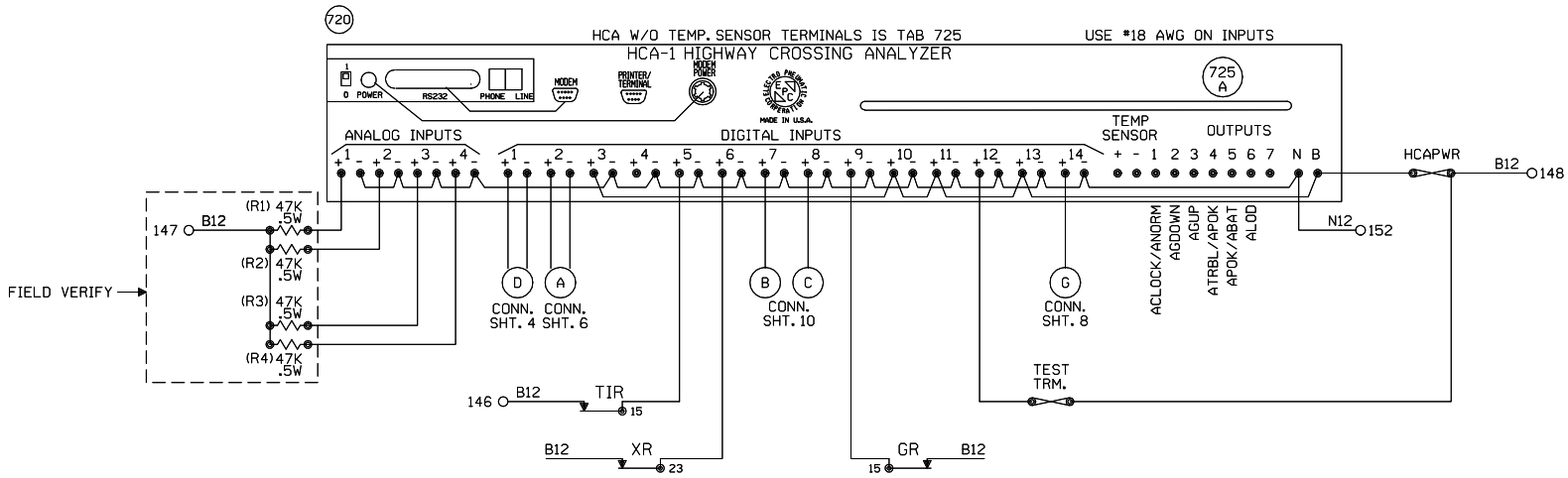

HCA NOTES:

1. CPU BOARD REV LEVEL "F" OR HIGHER.
2. SOFTWARE REV LEVEL "UP1-NC" OR GREATER ON IC13.
3. DIP SWITCH #1:
   ON, ON, ON, OFF, ON, ON, OFF, OFF.
4. DIP SWITCH #2:
   OFF, OFF, OFF, OFF, OFF, OFF, OFF, OFF.
5. JUMPER ALL UNUSED DIGITAL "+" INPUTS TO THE B TERMINAL.
6. JUMPER ALL UNUSED DIGITAL "-" INPUTS TO THE N TERMINAL.
7. THE ANALOG AND DIGITAL INPUT ASSIGNMENT MUST BE MARKED ON THE HCA SHEET.
8. DO NOT JUMPER INPUTS WITH DIFFERENT VOLTAGE REFERENCES TOGETHER.
9. REFER TO "FIELD INSTRUCTIONS FOR INSTALLATION AND OPERATION OF HIGHWAY CROSSING ANALYZERS" FOR EQUIPMENT SETUP.

5ISLDTI

ANALOG #1: 1 _LOD
ANALOG #2: 2 _LOD
ANALOG #3: 3 _LOD
ANALOG #4: 4 _LOD

DIGITAL #1: ISLAND - 1
DIGITAL #2: ISLAND - 2
DIGITAL #3: ISLAND - 3
DIGITAL #4: ISLAND - 4
DIGITAL #5: ISLAND - 5
DIGITAL #6: XR
DIGITAL #7: GATE DOWN A
DIGITAL #8: GATE DOWN B
DIGITAL #9: GP
DIGITAL #10: ISLAND ONLY
DIGITAL #11: FOREIGN XR
DIGITAL #12: TEST
DIGITAL #13: TROUBLE
DIGITAL #14: POR

MAYWOOD, ILLINOIS
FIFTH AVENUE
M.P. 10.50
GENEVA SUBDIVISION
D.O.T. #173 998Y
PROJ.#

OLD M.P. = 10.43

5 10-29-07 M.P. 10.17 A.F.E. 85551 / /CTC/JJF	Revised: 11/30/09 MODIFY TIR CIRCUIT, REMOVE LOD'S AND UPGRADE LIGHTS TO LED'S AT FIFTH AVENUE M.P. 10.50 Req: 15579 WO#: OE Is: 08/28/08 MJD/CTC/ /JJF	3 REV. 09-26-07 M.P.'S CHANGED ON CROSSINGS PER AC. M.P. 10.50 - M.P. 27.54 REC. #14590 06-07-07 JJO/NST/ /	REV. 5-20-03 INSTALLED CRTU AT M.P. 10.50 W.O. #3327 REC. #9213 4-10-03 JJO/WITT/WITT/EML	1 REV. 2-12-01 HXP AND E.C. UPGRADE PROJECT M.P. 10.00 - 10.50 W.O.33814 10-15-00 JJF CJB/NST/HAR/JNM	MODIFICATION LEVEL		UNION PACIFIC SIGNAL DESIGN	DES: HARMON	UNION PACIFIC RAILROAD CHICAGO, ILLINOIS TO CLINTON, IOWA C.T.C. CIRCUITS	DATE 07-22-99
					Q.A. LAST LEVEL CHK'D.	CQ		DIG: HARMON		SHEET 2
					LAST LEVEL MOD. THIS TYP.	CK		CHK: JJF		DWG 10.50
					LAST LEVEL BY DESIGNER.	CT		A.F.E. 33814		
					CHANGED FROM TYP.? Y/N	Y		ID= GEN1050.2X	Office of Sr AVP Engineering - Signal/TCO Omaha, Nebraska	GEN

(REV. 6-1-98) (REMOTE.2) OLD ID = GEN1043.2

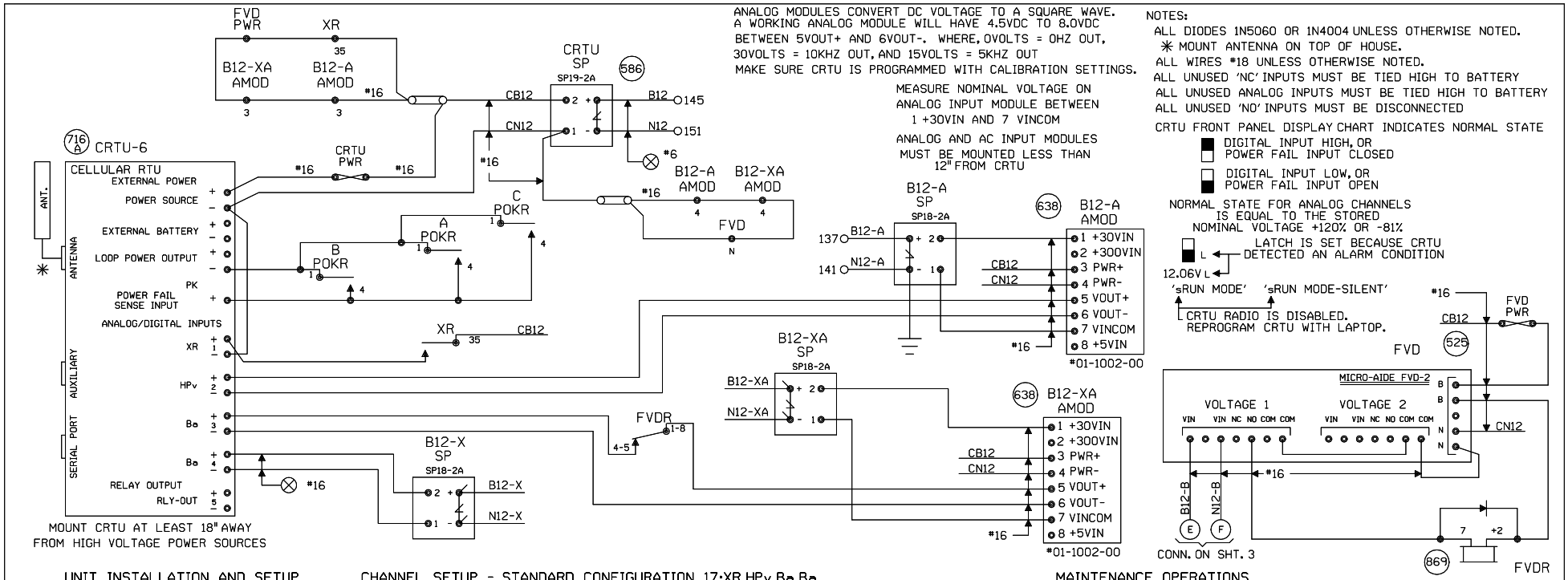

ANALOG MODULES CONVERT DC VOLTAGE TO A SQUARE WAVE. A WORKING ANALOG MODULE WILL HAVE 4.5VDC TO 8.0VDC BETWEEN 5VOUT+ AND 6VOUT-. WHERE, 0VOLTS = 0HZ OUT, 30VOLTS = 10KHZ OUT, AND 15VOLTS = 5KHZ OUT
MAKE SURE CRTU IS PROGRAMMED WITH CALIBRATION SETTINGS.

MEASURE NOMINAL VOLTAGE ON ANALOG INPUT MODULE BETWEEN 1 +30VIN AND 7 VINCOM

ANALOG AND AC INPUT MODULES MUST BE MOUNTED LESS THAN 12" FROM CRTU

NOTES:
ALL DIODES 1N5060 OR 1N4004 UNLESS OTHERWISE NOTED.
✳ MOUNT ANTENNA ON TOP OF HOUSE.
ALL WIRES #18 UNLESS OTHERWISE NOTED.
ALL UNUSED 'NC' INPUTS MUST BE TIED HIGH TO BATTERY
ALL UNUSED ANALOG INPUTS MUST BE TIED HIGH TO BATTERY
ALL UNUSED 'NO' INPUTS MUST BE DISCONNECTED

CRTU FRONT PANEL DISPLAY CHART INDICATES NORMAL STATE
■ DIGITAL INPUT HIGH, OR POWER FAIL INPUT CLOSED
□ DIGITAL INPUT LOW, OR POWER FAIL INPUT OPEN

NORMAL STATE FOR ANALOG CHANNELS IS EQUAL TO THE STORED NOMINAL VOLTAGE +120% OR -81%
LATCH IS SET BECAUSE CRTU DETECTED AN ALARM CONDITION
12.06V L
'sRUN MODE' 'sRUN MODE-SILENT'
CRTU RADIO IS DISABLED. REPROGRAM CRTU WITH LAPTOP.

UNIT INSTALLATION AND SETUP

R.R. SITE ID WHERE; SSSS = 4 CHARACTER SUBDIVISION ID. FILL WITH PRECEDING ZEROS AS REQUIRED. THE MAIN TRACK SUBDIVISION ID* IS IN THE CURRENT TIMETABLE. INDUSTRIAL LEADS, LEASED, AND LEAD TRACKS LISTED WITHIN THE SUBDIVISION MAY HAVE THEIR OWN UNIQUE SUBDIVISION ID*. ALWAYS REFER TO CURRENT PRINTED COPY OF THE TIMETABLE.
LLLLLLLL = 8 CHARACTERS USE DOT* AT CROSSINGS, AND
WDLLLLLL = USE 'WD' THEN MP* AT WAYSIDE LOCATIONS.
EXAMPLE = 0785WD1801.5UT
HBLLLLLL = USE 'HB' THEN MP* AT HBD SITES.
EXAMPLE = D100-HB55.62TX
THE MP* MUST USE A DECIMAL POINT TO SEPARATE NUMBERS.
FILL WITH PRECEDING DASHES AS REQUIRED.
AA = 2 CHARACTER STATE NAME FOR ALL LOCATIONS.
MUST BE 14 CHARACTERS LONG, NO SPACES ALLOWED.

SITE IDENTIFIER: SSSSLLLLLLLLAA	0001-173998YIL
OPERATION TO RESUME:	RUN
SIGNAL STRENGTH dBm	88
CARRIER ID	00020
FIRMWARE VERSION	2.3.12
BOOT VERSION:	
CMM VERSION:	
SERIAL NUMBER	03-03243-2801-00
MIN ASSIGNMENT	
ESN: (MICROBURST ONLY)	
CONFIGURATION NET	MICROBURST
SILENCE INTERVAL	60 MINUTES
HEALTHCHECK INTERVAL	EVERY 2 DAYS
ALARM DEFER DELAY	240 MINUTES (4 HOURS)
SIGNAL STATUS	GOOD
SCADANET STATUS	GOOD
CALIBRATION CONSTANT CH1	
CALIBRATION CONSTANT CH2	000-10181
CALIBRATION CONSTANT CH3	000-09642
CALIBRATION CONSTANT CH4	000-9878
CALIBRATION CONSTANT PS	000-9751

FIELD PROVIDES: SAMPLED NOMINAL VOLTAGES, SCADANET STATUS CALIBRATION CONSTANTS, SERIAL NUMBER, AND SIGNAL STATUS.

CHANNEL SETUP - STANDARD CONFIGURATION 17:XR,HPv,Ba,Ba

CHANNEL NORMAL STATE	SENSE (NO/NC)	NAME FUNCTION	RECOGNITION DELAY SECONDS ACTIVE	RECOGNITION DELAY SECONDS NORMAL	RETURN TO NORMAL	REPORTING MODE	ALARM LINKED CHANNEL	ALARM LINKED CRITERIA	EVENT LOGGING ENABLED OPTIONS
POWER FAIL (CH5) ■	POWER FAIL DETECT NO	PF₁₋₁₋PK AC POWER FAIL	7,200 ALARM	300 NORMAL	ENABLED	ALERT	DISABLED	N/A	
CH1 ■	DIGITAL INPUT NO	CH1-XR XR DOWN TO LONG	1,800 ALARM	1 NORMAL	ENABLED	ALERT	DISABLED	N/A	ANALOG VALUE SENT
CH2 STORED NOMINAL VOLTAGE	ANALOG INPUT N/A	CH2-HP/V GATES NOT UP/DOWN LIGHT OUT BATTERY LOW	600 ALARM	1200 NORMAL	ENABLED	ALERT W/UPDATE	DISABLED	N/A	
CH3 STORED NOMINAL VOLTAGE	ANALOG INPUT N/A	CH3-Ba/V BATTERY MONITOR BATTERY LOW	600 ALARM	1200 NORMAL	ENABLED	ALERT W/UPDATE	DISABLED	N/A	
CH4 STORED NOMINAL VOLTAGE	ANALOG INPUT N/A	CH4-Ba/V BATTERY MONITOR BATTERY LOW	600 ALARM	1200 NORMAL	ENABLED	ALERT W/UPDATE	DISABLED	N/A	DIGITAL EVENTS
POWER SOURCE (CH6)	ANALOG INPUT N/A	PS-Ba/V BATTERY MONITOR BATTERY LOW	600 ALARM	1200 NORMAL	ENABLED	ALERT W/UPDATE	DISABLED	N/A	PF₁₋₁₋PK CH1-XR

ANALOG CHANNEL	USEFUL RANGE VOLTS LOW	USEFUL RANGE VOLTS HIGH	DISPLAYED RANGE VOLTS LOW	DISPLAYED RANGE VOLTS HIGH	RELATIVE ALARM POINT LOW	RELATIVE ALARM POINT HIGH	ABSOLUTE ALARM POINT LOW	ABSOLUTE ALARM POINT HIGH	AUTOMATIC UPDATE INTERVAL	STORED NOMINAL VOLTAGE	SAMPLED NOMINAL VOLTAGE
CH2	0.0	30.00	0.0	30.00	81%	120%	10.0	29.0	14 DAYS	15.81	
CH3	0.0	30.00	0.0	30.00	81%	120%	10.0	29.0	14 DAYS	13.65	
CH4	0.0	30.00	0.0	30.00	81%	120%	10.0	29.0	14 DAYS	13.64	
POWER SOURCE	0.0	30.00	0.0	30.00	81%	120%	10.0	29.0	14 DAYS	15.45	
RELAY OUTPUT	NAME RLY-OUT		ACTIVE SET-UP-OPEN		NORMAL CLR-DN-CLOSE		PULSE DURATION		15 SECONDS	StdCfg Ver: 2.3.3 REV'D 9-20-02	

MAINTENANCE OPERATIONS

TO START OR ABORT ANY PROCEDURE
1. PRESS THE 'CANCEL' BUTTON FIRST

WHEN RESPONDING TO A CALL, PUT THE CRTU IN THE 'SILENCE ALARMS' MODE
1. PRESS 'SELECT' AND THEN '+ ARROW' BUTTON UNTIL
   DISPLAY: ACTION? SILENCE ALARMS
2. PRESS THE 'SELECT' BUTTON TWICE
3. CORRECT PROBLEM AND SIMULATE NORMAL TRAIN MOVEMENT THROUGH THE LOCATION
4. EXAMINE EACH CHANNEL ON THE CRTU
5. PRESS THE '+/- ARROW' BUTTON VERIFY ALL CHANNELS INDICATE A NORMAL STATE
NORMAL STATES ARE ON THE CHANNEL SETUP CHART

CLEAR TIMERS, LATCHES AND SEND ALL NORMAL
1. DO STEPS #1 - #5 ABOVE, AND PRESS 'CANCEL'.
2. PRESS 'SELECT' AND THEN '- ARROW' BUTTON UNTIL
   DISPLAY: ACTION? SERVICE MODE
3. PRESS 'SELECT' AGAIN TO RESET TIMERS, AND IF
   DISPLAY: SERVICE MODE ALL NORMAL
4. PRESS 'SELECT' AGAIN TO CLEAR LATCHES, AND SEND ALL NORMAL. SKIP STEPS #5-#6.
5. HOWEVER, IF ALARMS ARE NOT CLEARED;
   DISPLAY: SERVICE MODE ALARMS PENDING/PRESENT
6. PRESS 'CANCEL', CORRECT PROBLEM AND REPEAT STEPS #2 THRU #5 UNTIL ALL NORMAL SENT.

TO CANCEL THE 'SILENCE ALARMS' MODE
1. PRESS 'SELECT' AND THEN '+ ARROW' BUTTON UNTIL
   DISPLAY: ACTION? CANCEL SILENCE
2. PRESS THE 'SELECT' BUTTON AGAIN

EXAMINE & SET BATTERY VOLTAGE NOMINAL VALUE
1. PRESS THE '+ ARROW' OR '- ARROW' BUTTON UNTIL THE DESIRED CHANNEL IS DISPLAYED.
   DISPLAY: PS-Ba: 13.83V NORMAL
2. VERIFY THE DISPLAYED READING WITH A DIGITAL VOLTMETER
3. PRESS THE 'SELECT' BUTTON, AND THE CRTU DISPLAY WILL SWITCH BETWEEN CURRENT/SAVED NOMINAL VOLTAGE VALUES.
   DISPLAY: NOMINAL ON #6? (CURRENT) 13.83
   DISPLAY: SAVED NOMINAL 6 (STORED) 12.69
4. PRESS THE 'SELECT' BUTTON AND THE CURRENT OR 'NOMINAL ON' VALUE WILL BE SAMPLED AND STORED AS THE 'SAVED NOMINAL' VALUE
5. VERIFY THE 'NOMINAL ON' AND 'SAVED NOMINAL' VALUES ARE EQUIVALENT, REPEAT STEPS #1 THRU #3 & PRESS THE 'CANCEL' BUTTON.

SETUP FVD-2 REMOVE COVER PLATE
VERIFY FVD-2 DIP SWITCH SETTINGS
PWR LED FLASHING GREEN
TIMER = 10 MINUTES
RELAY LATCHING OPERATION
CHECK BATTERY ON B/N TERMINALS
CHECK FUSE, IF NOT FLASHING SEND IN FOR REPAIR & RETURN.

SETUP VOLTAGE ALARM LIMITS
1. MEASURE BATTERY VOLTAGE AT VIN
2. CONNECT DVM POSITIVE LEAD TO RED TEST POINT (+TP).
3. CONNECT DVM NEGATIVE LEAD TO GREEN TEST POINT (COMMON TP).
4. ADJUST THE POT UNTIL IT READS 1/10TH THE ALARM LIMIT VALUE. WHERE 11.5V = 1.15V ON DVM
   SET HIGH = 120% OR 2-3V ABOVE VIN
   SET LOW = 81% OR 1-2V BELOW VIN
5. ADJUST BOTH LOW/HIGH ALARM LIMITS, REPEAT FOR EACH DETECTOR.
6. OPERATE RESET TO RESTORE FVD-2 TO NORMAL, NON-FAILURE STATE.

LOW ALARM LIMIT +TP
HIGH ALARM LIMIT +TP
COMMON TP
1AMP FUSE
RESET
V1 V2
HIGH ALARM LIMIT POT
LOW ALARM LIMIT POT

MAYWOOD, ILLINOIS
FIFTH AVENUE
M.P. 10.50
GENEVA SUBDIVISION
D.O.T.#173 998Y
PROJ.#

OLD M.P. = 10.43

3	10-29-07	M.P. 10.17 A.F.E. 85551	/ /CTC/JJF
2	REV. 09-26-07	M.P.'S CHANGED ON CROSSINGS PER AC. M.P. 10.50 - M.P. 27.54 REC. #14590 06-07-07	JJO/NST/ /
	REV. 5-20-03	INSTALLED CRTU AT M.P. 10.50 REC. #9213 4-10-03	JJO/WITT/WITT/EML

MODIFICATION LEVEL
Q.A. LAST LEVEL CHK'D.
LAST LEVEL MOD. THIS TYP.
LAST LEVEL BY DESIGNER.
CHANGED FROM TYP.? Y/N

UNION PACIFIC
QUALITY PRODUCTIVITY SAFETY
SIGNAL DESIGN

DES: WITT IND
DIG: WITT IND
CHK: EML
A.F.E.
ID= GEN1050.2AX

UNION PACIFIC RAILROAD
CHICAGO, ILLINOIS TO
CLINTON, IOWA
C.T.C. CIRCUITS
Office of Sr AVP Engineering - Signal/TCO Omaha, Nebraska

DATE 11-01-01
SHEET 2A
DWG 10.50
GEN

OLD ID = GEN1043.2A

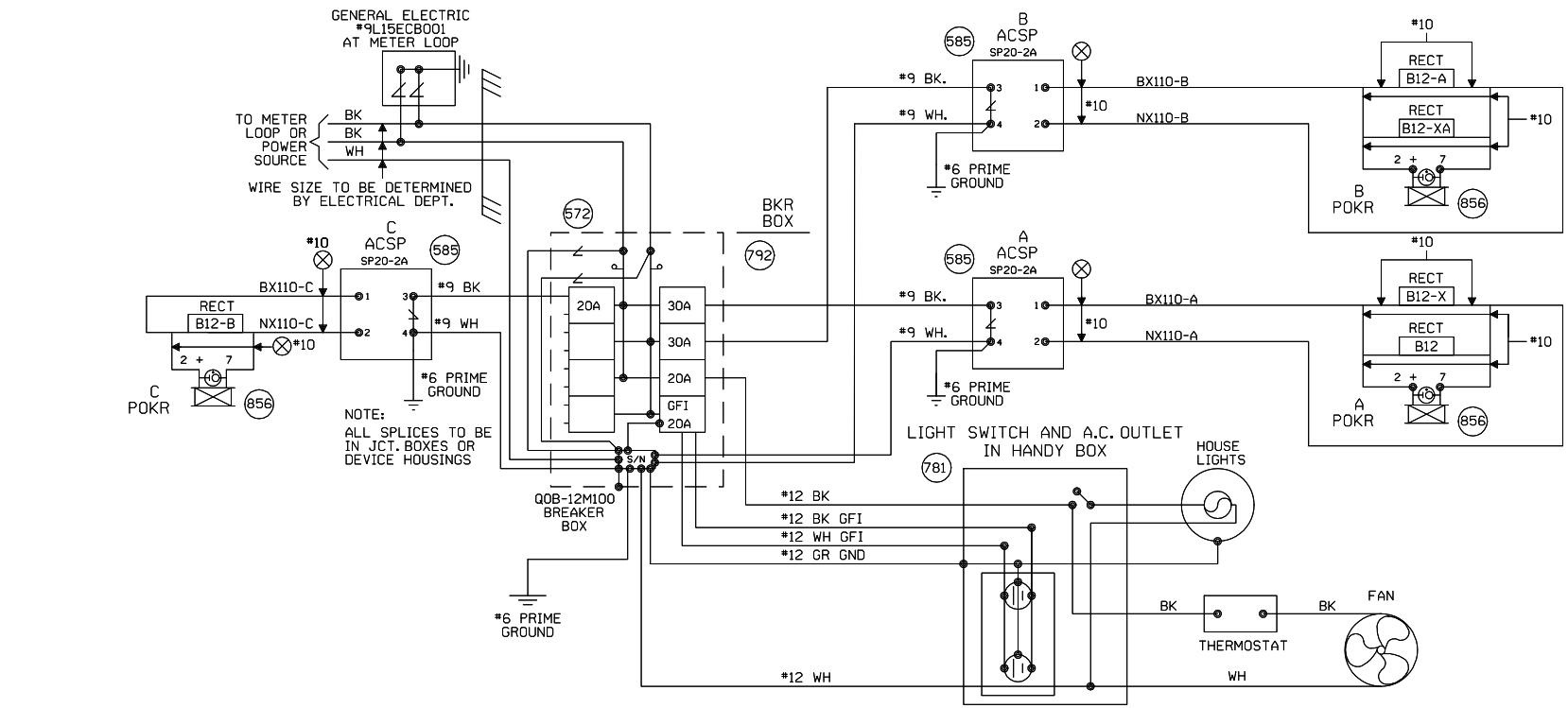

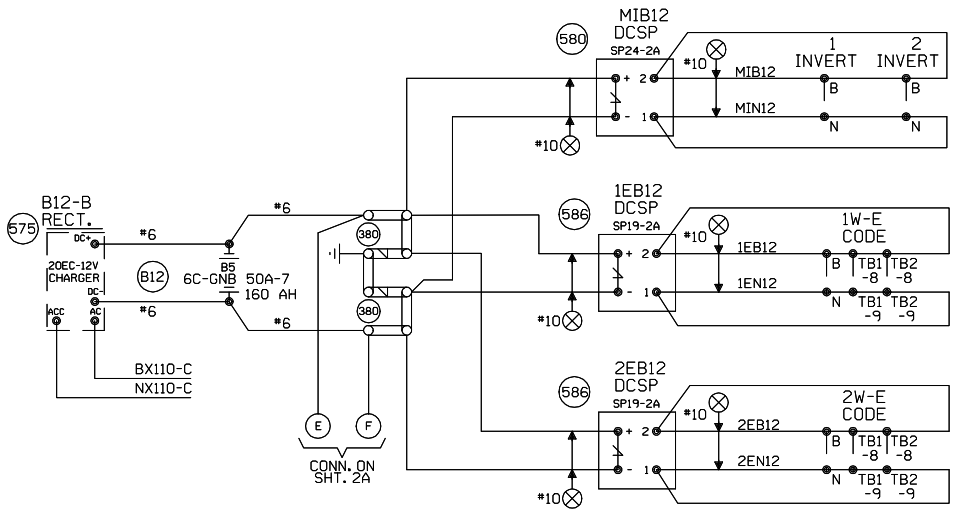

MAYWOOD, ILLINOIS
FIFTH AVENUE
M.P. 10.50
GENEVA SUBDIVISION
D.O.T. #173 998Y
PROJ.#

OLD M.P. = 10.43

		4 10-29-07 M.P. 10.17 A.F.E. 85551 / /CTC/JJF	3 REV. 09-26-07 M.P.'S CHANGED ON CROSSINGS PER AC. M.P. 10.50 - M.P. 27.54 REC. #14590 06-07-07 JJO/NST/ /	REV. 5-20-03 INSTALLED CRTU AT M.P. 10.50 REC. #9213 4-10-03 JJO/WITT/WITT/EML	1 REV. 2-12-01 HXP AND E.C. UPGRADE PROJECT M.P. 10.00 - 10.50 W.O.33814 10-15-00 JJF CJB/NST/HAR/JNM	MODIFICATION LEVEL Q.A. LAST LEVEL CHK'D. CQ LAST LEVEL MOD. THIS TYP. CK LAST LEVEL BY DESIGNER. CT CHANGED FROM TYP.? Y/N Y	UNION PACIFIC QUALITY PRODUCTIVITY SAFETY SIGNAL DESIGN	DES: HARMON DIG: HARMON CHK: JJF A.F.E. 33814 ID= GEN1050.3X	UNION PACIFIC RAILROAD CHICAGO, ILLINOIS TO CLINTON, IOWA C.T.C. CIRCUITS Office of Sr AVP Engineering - Signal/TCO Omaha, Nebraska	DATE 07-22-99 SHEET 3 DWG 10.50 GEN

(REV. 6-1-98) (CIRCUIT.TYP)

OLD ID = GEN1043.3