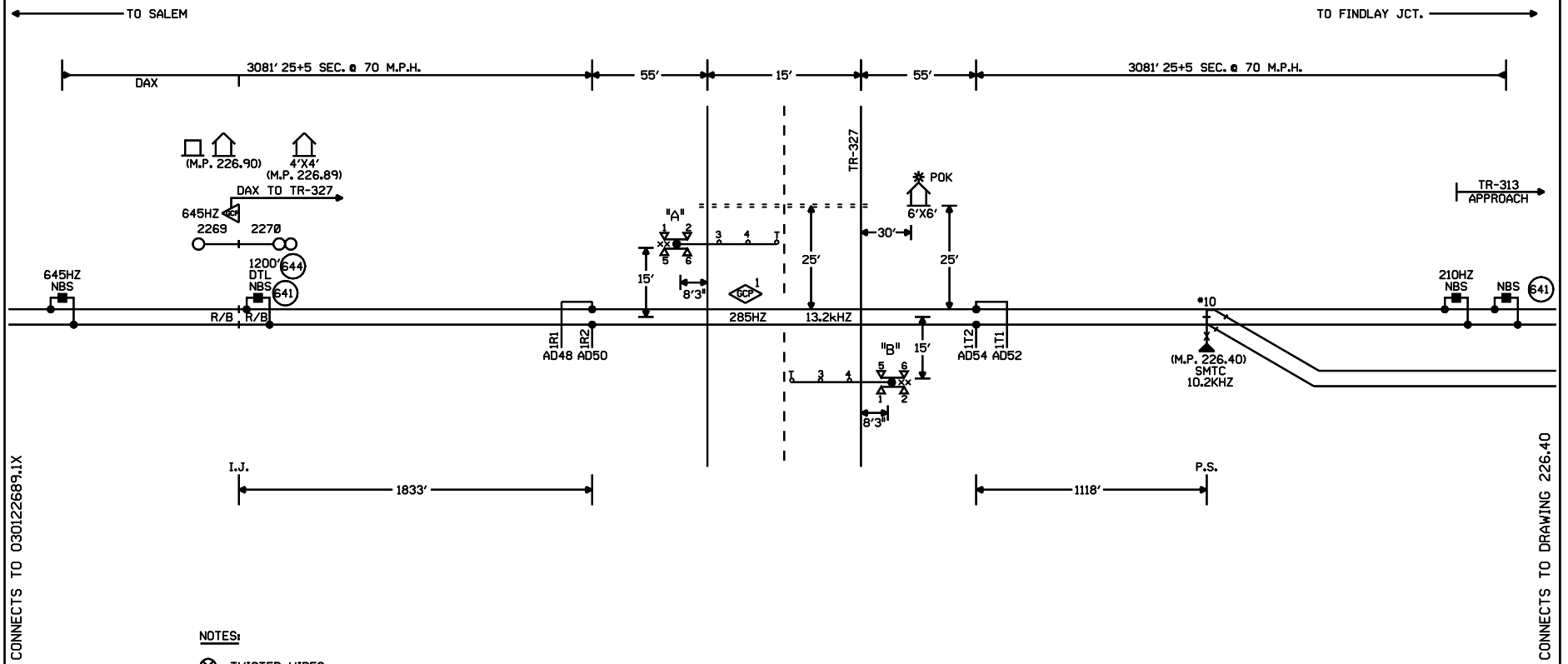


NOTES:

⊗ = TWISTED WIRES
INSULATED 1 TWIST PER FT.
ALL TRACK WIRES 2C. #6

TRANSMITTER AND RECEIVER LEADS TO BE SEPARATED BY AT LEAST 12" IN TRENCH, LENGTHS SHOULD NOT EXCEED MANUFACTURES RECOMMENDATION.

TOP OF FOUNDATION TO BE AT SAME ELEVATION AS THE SURFACE OF THE TRAVELED WAY & NO MORE THAN 4" ABOVE THE SURFACE OF THE GROUND.

ALL BUNGALOW WIRING TO BE #16 AWG FLEX UNLESS OTHERWISE SPECIFIED EXCEPT ALL GROUND WIRE TO BE #6 AWG FLEX OR LARGER.

ALL WIRING IN GATE MECHANISM TO BE #10 "AWG FLEX".

REFER TO UP STANDARD DWG FOR BUNGALOW GROUNDING.

PORTABLE GENERATOR EXTENSION CORD FOR 240V TO 240V IS PROVIDED AS WELL AS A 120V TO 240V ADAPTER.

ALL LIGHTS TO BE 12" ROUNDELS.

= = = = = = 4" X 30' CONDUIT

LIGHTS: LED LIGHTS

GATE A: 15'
GATE B: 15'

xx = BELL

CRTU MICROBURST

CONSTRUCTION NOTES:

1. THIS WORK TO BE DONE IN CONJUNCTION WITH REMOTE AT M.P. 226.89
2. CRTU PART NUMBER 522 8800 (GETS 180642-000).

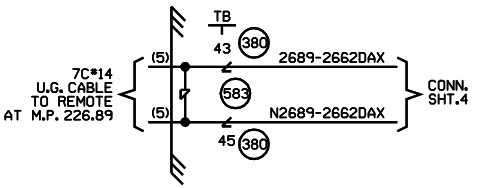


W(S) ⟵⟶ E(N)

CABLE TABULATION

CABLE #5 7C#14 U.G.B.T. HOUSE TO MP. 226.89

NEW SHEET

| | | | | | | | | | | | |
|---|---|---|---|---|---|---|---|---|---|---|---|
| | | | | | Designed: 6/18/05<br>INSTALL FLASHERS AND GATE WITH CWT AT M.P.226.62 TR-327<br>Rec#: WO#: 53644<br>IS: /JTB /SSC/JJF | MODIFICATION LEVEL<br>Q. A. LAST LEVEL CHECKED DR<br>LAST LEVEL MOD THIS TYPICAL DR<br>LAST LEVEL BY DESIGNER DR<br>CHANGED FROM TYPICAL? Y<br>REV 02.01.09 4K 1TKBG.1 | UNION PACIFIC<br>QUALITY PRODUCTIVITY SAFETY<br>SIGNAL DESIGN | Date: 06/18/05<br>Des: SSC<br>Chk: JTB<br>AFE: 53644 | UNION PACIFIC RAILROAD<br>ST. ELMO, ILLINOIS<br>TR-327<br>SALEM SUBDIVISION<br>Office of Sr AVP Engineering - Signal/TCO Omaha, Nebraska | Sh.: 1<br>DOT 167917H<br>MP: 226.62<br>ID: 030122662.1X |

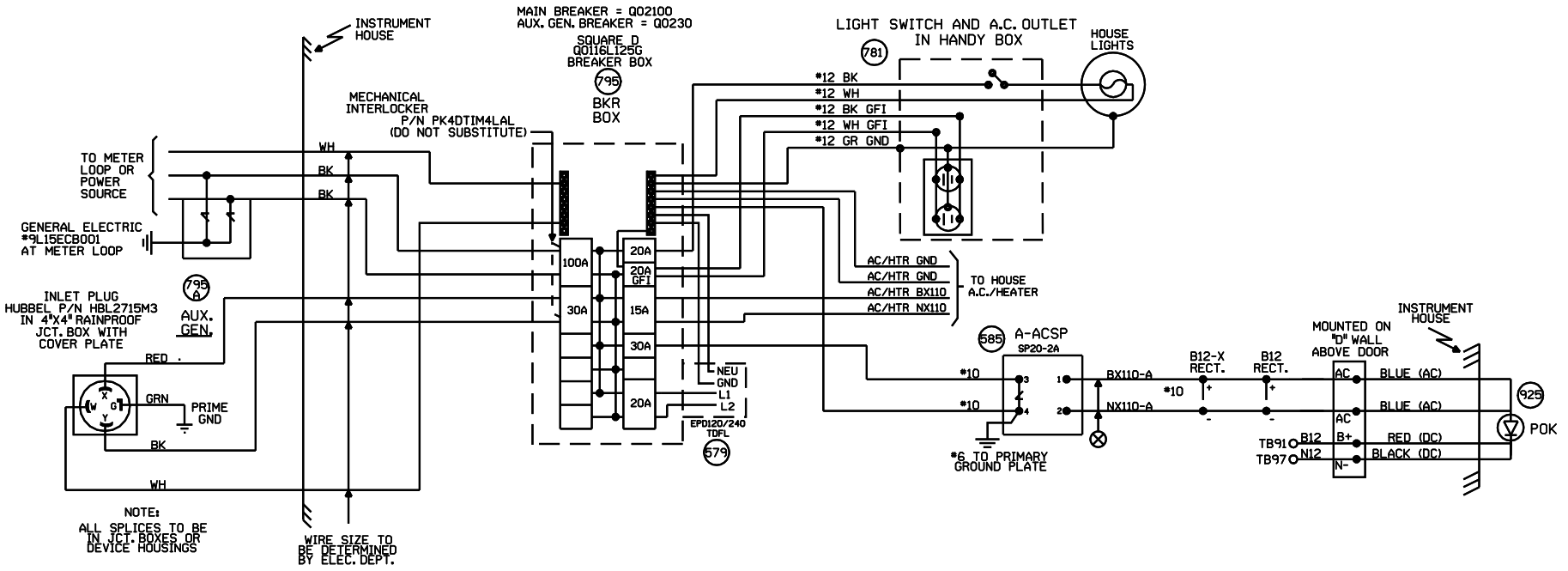


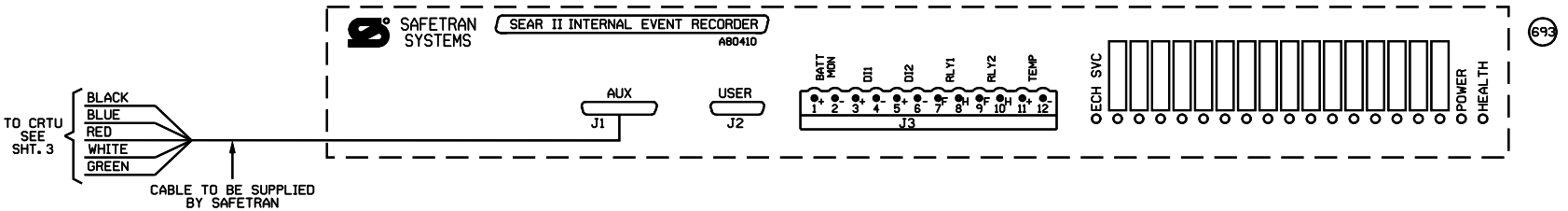


NEW SHEET

| | | | | | | | | | |
|---|---|---|---|---|---|---|---|---|---|
| Designed: 6/18/05<br>INSTALL FLASHERS AND GATE WITH CWT AT M.P.226.62 TR-327<br>Rec#: WO#: 53644<br>IS: /JTB<br>/SSC/JJF | MODIFICATION LEVEL | | UNION PACIFIC<br>QUALITY PRODUCTIVITY SAFETY<br>SIGNAL DESIGN | Date: 06/18/05<br>Des: SSC<br>Chk: JTB<br>AFE: 53644 | UNION PACIFIC RAILROAD<br>ST. ELMO, ILLINOIS<br>TR-327<br>SALEM SUBDIVISION<br>Office of Sr AVP Engineering - Signal/TCO Omaha, Nebraska | Sh.: 2<br>DOT 167917H<br>MP: 226.62<br>ID: 030122662.2X |
| | Q.A. LAST LEVEL CHECKED | DR | | | | |
| | LAST LEVEL MOD THIS TYPICAL | DR | | | | |
| | LAST LEVEL BY DESIGNER | DR | | | | |
| | CHANGED FROM TYPICAL? | Y | | | | |
| | REV 02.01.09 4K SEARAC.2 | | | | | |

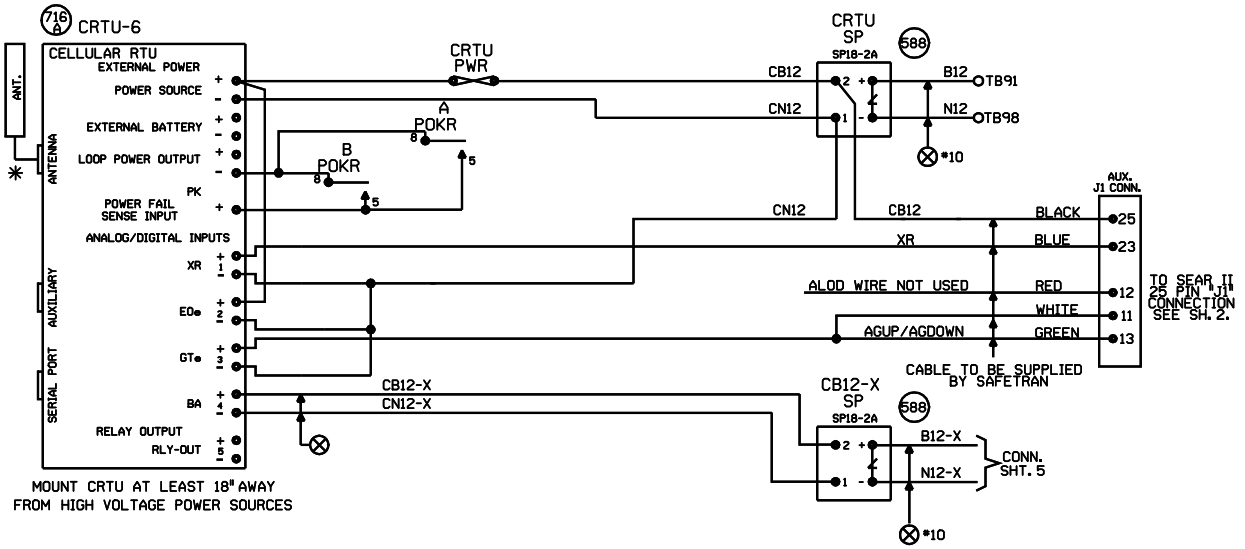


MOUNT CRTU AT LEAST 18" AWAY FROM HIGH VOLTAGE POWER SOURCES

NOTES:

ALL DIODES 1N5060 OR 1N4004 UNLESS OTHERWISE NOTED.

✳ MOUNT ANTENNA ON TOP OF HOUSE.
INSTALL ANTENNA CABLE AND CHOKE PER TECH BULLENTIN #99-0015-00

ALL WIRES #18 UNLESS OTHERWISE NOTED.

ALL UNUSED 'NC' INPUTS MUST BE TIED HIGH TO BATTERY

ALL UNUSED ANALOG INPUTS MUST BE TIED HIGH TO BATTERY

ALL UNUSED 'NO' INPUTS MUST BE DISCONNECTED

NORMAL STATE FOR ANALOG CHANNELS IS EQUAL TO THE STORED NOMINAL VOLTAGE +120% OR -81%

CRTU FRONT PANEL DISPLAY CHART INDICATES NORMAL STATE

DIGITAL INPUT HIGH, OR POWER FAIL INPUT CLOSED — DIGITAL INPUT LOW, OR POWER FAIL INPUT OPEN

L — LATCH IS SET BECAUSE CRTU DETECTED AN ALARM CONDITION

12.06V L

'sRUN MODE' — 'sRUN MODE-SILENT'
CRTU RADIO IS DISABLED. REPROGRAM CRTU WITH LAPTOP.

ANALOG AND AC INPUT MODULES AND SURGE PROTECTORS MUST BE MOUNTED LESS THAN 18" FROM CRTU

ANALOG MODULES CONVERT DC VOLTAGE TO A SQUARE WAVE. A WORKING ANALOG MODULE WILL HAVE 4.5VDC TO 8.0VDC BETWEEN 5VOUT+ AND 6VOUT-. WHERE, 0VOLTS = 0HZ OUT, 30VOLTS = 10KHZ OUT, AND 15VOLTS = 5KHZ OUT

MAKE SURE CRTU IS PROGRAMMED WITH CALIBRATION SETTINGS.

CRTU CH4 CAN BE CONNECTED TO EITHER SP18 OR EQUIPMENT SIDE OF MDSA1, TAB 565

## UNIT INSTALLATION AND SETUP

R.R. SITE ID WHERE: SSSS = 4 CHARACTER SUBDIVISION ID. FILL WITH PRECEDING ZEROS AS REQUIRED. THE MAIN TRACK SUBDIVISION ID* IS IN THE CURRENT TIMETABLE. INDUSTRIAL LEADS, LEASED, AND LEAD TRACKS LISTED WITHIN THE SUBDIVISION MAY HAVE THEIR OWN UNIQUE SUBDIVISION ID*. ALWAYS REFER TO CURRENT PRINTED COPY OF THE TIMETABLE.
LLLLLLLL = 8 CHARACTERS USE DOT* AT CROSSINGS, AND
WDLLLLLL = USE 'WD' THEN MP* AT WAYSIDE LOCATIONS.
EXAMPLE = 0785WD1801.5UT
HBLLLLLL = USE 'HB' THEN MP* AT HBD SITES.
EXAMPLE = 0100-HB55.62TX
THE MP* MUST USE A DECIMAL POINT TO SEPARATE NUMBERS. FILL WITH PRECEDING DASHES AS REQUIRED.
AA = 2 CHARACTER STATE NAME FOR ALL LOCATIONS. MUST BE 14 CHARACTERS LONG, NO SPACES ALLOWED.

| | |
|---|---|
| SITE IDENTIFIER: SSSSLLLLLLLLAA | 0046-167917HIL |
| OPERATION TO RESUME: | RUN |
| SIGNAL STRENGTH dBm | |
| CARRIER ID | |
| FIRMWARE VERSION | 2.3.06 |
| SERIAL NUMBER | |
| BOOT VERSION: | |
| CMM VERSION: | |
| MIN ASSIGNMENT | |
| ESN: (MICROBURST ONLY) | |
| CONFIGURATION NET | MICROBURST |
| SILENCE INTERVAL | 60 MINUTES |
| HEALTHCHECK INTERVAL | EVERY 2 DAYS |
| ALARM DEFER DELAY | 240 MINUTES (4 HOURS) |
| SIGNAL STATUS | |
| SCADANET STATUS | |
| CALIBRATION CONSTANT CH1 | |
| CALIBRATION CONSTANT CH2 | |
| CALIBRATION CONSTANT CH3 | |
| CALIBRATION CONSTANT CH4 | |
| CALIBRATION CONSTANT PS | |

FIELD PROVIDES: SAMPLED NOMINAL VOLTAGES, SCADANET STATUS CALIBRATION CONSTANTS, SERIAL NUMBER, AND SIGNAL STATUS.

## CHANNEL SETUP - STANDARD CONFIGURATION 32:XR,EOe,GTe,Ba

| CHANNEL NORMAL STATE | SENSE (NO/NC) | NAME FUNCTION | RECOGNITION DELAY SECONDS ACTIVE | RECOGNITION DELAY SECONDS NORMAL | RETURN TO NORMAL | REPORTING MODE | ALARM LINKED CHANNEL | ALARM LINKED CRITERIA | EVENT LOGGING ENABLED OPTIONS |
|---|---|---|---|---|---|---|---|---|---|
| POWER FAIL (CH5) | POWER FAIL DETECT NO | PFin-PK AC POWER FAIL | 7,200 ALARM | 300 NORMAL | ENABLED | ALERT | DISABLED | N/A | ANALOG VALUE SENT |
| CH1 | DIGITAL INPUT NC | CH1-XR XR DOWN TO LONG | 1,800 ALARM | 1 NORMAL | ENABLED | ALERT | DISABLED | N/A | |
| CH2 | DIGITAL INPUT NO | CH2-EOe LIGHT OUT | 120 ALARM | 10 NORMAL | ENABLED | ALERT | DISABLED | N/A | |
| CH3 | DIGITAL INPUT NO | CH3-GTe GATES NOT UP/DOWN | 120 ALARM | 10 NORMAL | ENABLED | ALERT | DISABLED | N/A | DIGITAL EVENTS: PFin-PK, CH1-XR, CH2-EOe, CH3-GTe |
| CH4 STORED NOMINAL VOLTAGE | ANALOG INPUT N/A | CH4-Ba/V BATTERY MONITOR BATTERY LOW | 600 ALARM | 1200 NORMAL | ENABLED | ALERT W/UPDATE | DISABLED | N/A | |
| POWER SOURCE (CH6) | ANALOG INPUT N/A | PS-Ba/V BATTERY MONITOR BATTERY LOW | 600 ALARM | 1200 NORMAL | ENABLED | ALERT W/UPDATE | DISABLED | N/A | |

| ANALOG CHANNEL | USEFUL RANGE VOLTS LOW | USEFUL RANGE VOLTS HIGH | DISPLAYED RANGE VOLTS LOW | DISPLAYED RANGE VOLTS HIGH | RELATIVE ALARM POINT LOW | RELATIVE ALARM POINT HIGH | ABSOLUTE ALARM POINT LOW | ABSOLUTE ALARM POINT HIGH | AUTOMATIC UPDATE INTERVAL | STORED NOMINAL VOLTAGE | SAMPLED NOMINAL VOLTAGE |
|---|---|---|---|---|---|---|---|---|---|---|---|
| | | | | | | | | | | | |
| | | | | | | | | | | | |
| | | | | | | | | | | | |
| CH4 | 0.0 | 30.00 | 0.0 | 30.00 | 81% | 120% | 10.0 | 29.0 | 14 DAYS | 12.69 | |
| POWER SOURCE | 0.0 | 30.00 | 0.0 | 30.00 | 81% | 120% | 10.0 | 29.0 | 14 DAYS | 12.69 | |
| RELAY OUTPUT | NAME RLY-OUT | | ACTIVE SET-UP-OPEN | | NORMAL CLR-DN-CLOSE | | PULSE DURATION | | 15 SECONDS | StdCfg Ver: 2.3.3 REV'D 9-20-02 | |

## MAINTENANCE OPERATIONS

TO START OR ABORT ANY PROCEDURE

1. PRESS THE 'CANCEL' BUTTON FIRST

WHEN RESPONDING TO A CALL, PUT THE CRTU IN THE 'SILENCE ALARMS' MODE

1. PRESS 'SELECT' AND THEN '+ ARROW' BUTTON UNTIL
   DISPLAY: ACTION?
   SILENCE ALARMS
2. PRESS THE 'SELECT' BUTTON TWICE
3. CORRECT PROBLEM AND SIMULATE NORMAL TRAIN MOVEMENT THROUGH THE LOCATION
4. EXAMINE EACH CHANNEL ON THE CRTU
5. PRESS THE '+/- ARROW' BUTTON
   VERIFY ALL CHANNELS INDICATE A NORMAL STATE
   NORMAL STATES ARE ON THE CHANNEL SETUP CHART

CLEAR TIMERS, LATCHES AND SEND ALL NORMAL

1. DO STEPS #1 - #5 ABOVE, AND PRESS 'CANCEL'.
2. PRESS 'SELECT' AND THEN '- ARROW' BUTTON UNTIL
   DISPLAY: ACTION?
   SERVICE MODE
3. PRESS 'SELECT' AGAIN TO RESET TIMERS, AND IF
   DISPLAY: SERVICE MODE
   ALL NORMAL
4. PRESS 'SELECT' AGAIN TO CLEAR LATCHES, AND SEND ALL NORMAL. SKIP STEPS #5-#6.
5. HOWEVER, IF ALARMS ARE NOT CLEARED:
   DISPLAY: SERVICE MODE
   ALARMS PENDING/PRESENT
6. PRESS 'CANCEL', CORRECT PROBLEM AND REPEAT STEPS #2 THRU #5 UNTIL ALL NORMAL SENT.

TO CANCEL THE 'SILENCE ALARMS' MODE

1. PRESS 'SELECT' AND THEN '+ ARROW' BUTTON UNTIL
   DISPLAY: ACTION?
   CANCEL SILENCE
2. PRESS THE 'SELECT' BUTTON AGAIN

EXAMINE & SET BATTERY VOLTAGE NOMINAL VALUE

1. PRESS THE '+ ARROW' OR '- ARROW' BUTTON UNTIL THE DESIRED CHANNEL IS DISPLAYED.
   DISPLAY: PS-Ba:
   13.83V NORMAL
2. VERIFY THE DISPLAYED READING WITH A DIGITAL VOLTMETER
3. PRESS THE 'SELECT' BUTTON, AND THE CRTU DISPLAY WILL SWITCH BETWEEN CURRENT/SAVED NOMINAL VOLTAGE VALUES.
   DISPLAY: NOMINAL ON #6? (CURRENT)
   13.83
   DISPLAY: SAVED NOMINAL 6 (STORED)
   12.69
4. PRESS THE 'SELECT' BUTTON AND THE CURRENT OR 'NOMINAL ON' VALUE WILL BE SAMPLED AND STORED AS THE 'SAVED NOMINAL' VALUE
5. VERIFY THE 'NOMINAL ON' AND 'SAVED NOMINAL' VALUES ARE EQUIVALENT, REPEAT STEPS #1 THRU #3 & PRESS THE 'CANCEL' BUTTON.

CHANGE CRTU CONFIGURATION TO CONFIGURATON PROGRAM 32

**NEW SHEET**

Designed: 6/18/05

INSTALL FLASHERS AND GATE WITH CWT AT M.P.226.62 TR-327

Rec#: 15: WO#: 53644 /JTB /SSC/JJF

| MODIFICATION LEVEL | |
|---|---|
| Q.A. LAST LEVEL CHECKED | DJ |
| LAST LEVEL MOD THIS TYPICAL | DJ |
| LAST LEVEL BY DESIGNER | DR |
| CHANGED FROM TYPICAL? | Y |

rev 06.01.04 CRTUCFG32-28AT.3

UNION PACIFIC — QUALITY PRODUCTIVITY SAFETY — SIGNAL DESIGN

Date: 06/18/05
Dest: SSC
Chk: JTB
AFE: 53644

**UNION PACIFIC RAILROAD**
ST. ELMO, ILLINOIS
TR-327
SALEM SUBDIVISION
Office of Sr AVP Engineering - Signal/TCD Omaha, Nebraska

Sh.: 3
DOT 167917H
MP: 226.62
ID: 030122662.3X

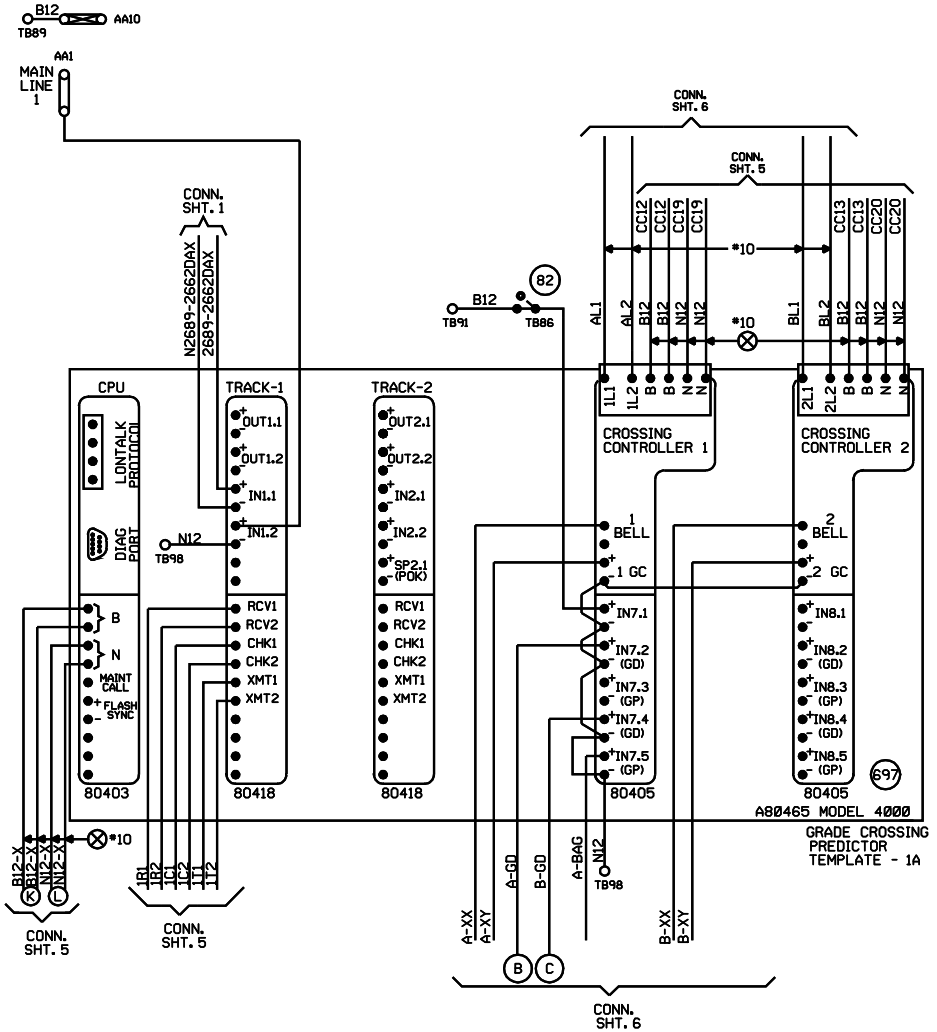


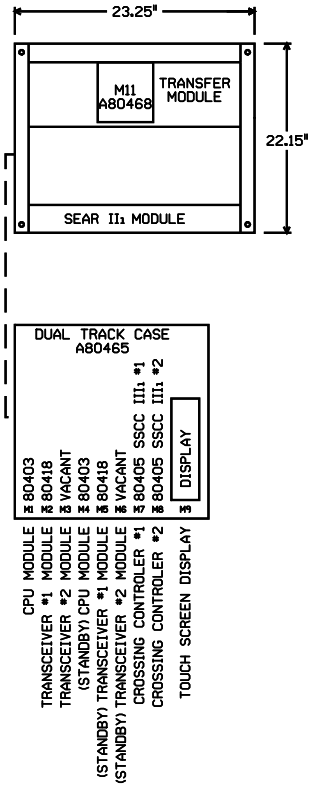


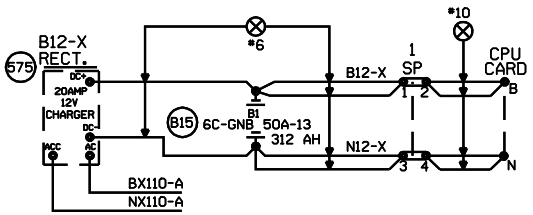


| "Mf" FREQUENCY (HZ) | MAXIMUM TRANSMIT WIRE LENGTH (FEET) |
|---|---|
| 86 | 100 |
| 114 | 125 |
| 156 | 150 |
| 211 | 200 |
| 285-970 | 250 |

NOTE:
EACH TRANSMITTER TO RAIL WIRE FROM XMT1 AND XMT2 MUST NOT EXCEED THE MAXIMUM LENGTH SPECIFIED IN THE TABLE SHOWN. THE RECEIVER WIRE LENGTH IS NOT CRITICAL. DOES NOT APPLY TO 6 TRACK WIRE APPLICATION.

NEW SHEET

Designed: 6/18/05
INSTALL FLASHERS AND GATE WITH CWT AT M.P.226.62 TR-327
Rec#: IS:
WO#: 53644 /JTB /SSC/JJF

| MODIFICATION LEVEL | |
|---|---|
| Q.A. LAST LEVEL CHECKED | DR |
| LAST LEVEL MOD THIS TYPICAL | DR |
| LAST LEVEL BY DESIGNER | DR |
| CHANGED FROM TYPICAL? | Y |

REV 02.01.09 4K 2TKQF.3

UNION PACIFIC
QUALITY PRODUCTIVITY SAFETY
SIGNAL DESIGN

Date: 06/18/05
Des: SSC
Chk: JTB
AFE: 53644

UNION PACIFIC RAILROAD
ST. ELMO, ILLINOIS
TR-327
SALEM SUBDIVISION
Office of Sr AVP Engineering - Signal/TCO Omaha, Nebraska

Sh.: 4
DOT 167917H
MP: 226.62
ID: 030122662.4X