SAFTRAN MODEL "EM" (GRISWOLD)

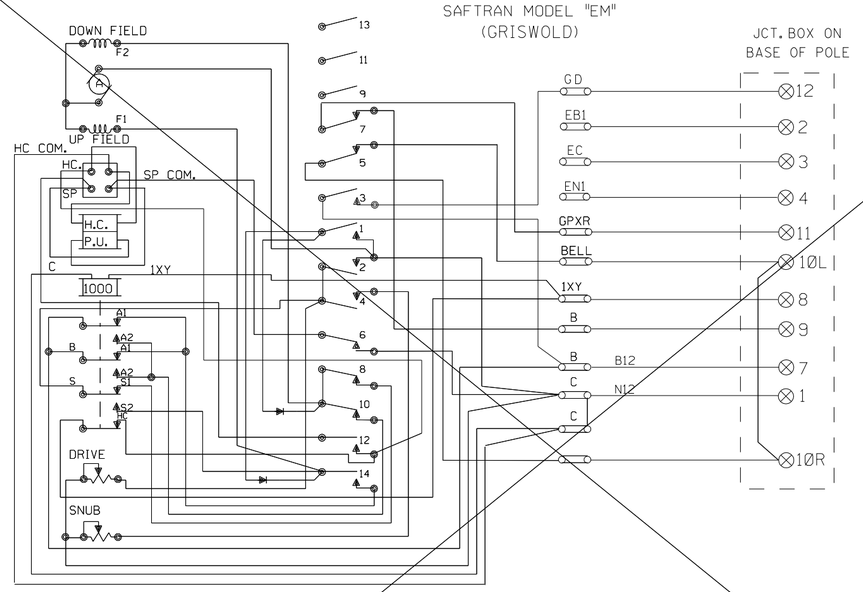

SHOW TYPE MECH. INSTALLED

SPACE NO.	CONTACT OPERATION: CONTACT CLOSED CLEARING	CONTACT OPERATION: CONTACT CLOSED RETURNING	CIRCUIT BREAKER FUNCTIONS: USE OF CONTACT
1	40°50°85°90°	90°85°50°40°	CONTROL OF ARC SUPRESSING RECTIFIERS
2	0°10°	10°0°	FINAL DOWN SNUB
3	0°5°	5°0°	GATE DOWN
4	0°44°	44°0°	DOWN SNUB
5	10°90°	90°10°	TO CUT OFF BELL WHEN GATE ARM IS DOWN
6	80°90°	90°80°	CONTROL OF SOLENOID PICK UP
7	80°90°	90°80°	TO CONTROL GPR RELAY & KEEP FLASHING LIGHTS OPERATING UNTIL GATES CLEAR
8	0°5°80°90°	90°80°5°0°	UP SNUB
9	—	—	SPARE
10	45°90°	90°45°	MOTOR CUTOUT(DOWN)
11	—	—	SPARE
12	0°90°	80°0°	OPERATED BY MOTOR CUTOUT SWITCH TO CUT OFF CURRENT FROM SOLENOID PICKUP
13	—	—	NO CAM
14	0°90°	80°0°	MOTOR CUTOUT(UP)

W.R.R.S. CO TYPE D NO.3567 GATE MECHANISM

SHOW TYPE MECH. INSTALLED

JCT. BOX ON BASE POLE

L	R	L	R
1		7	
2		8	
3		9	
4		10	
5		11	
6		12	

CONT. SPACE NO.	CLEARING (UP) CLOSES	CLEARING (UP) OPENS	RETURNING (DN.) CLOSES	RETURNING (DN.) OPENS	FUNCTION OF CONTACT
1	—	88°	78°	—	UP MOTOR CUTOUT
2	76°	85°	85°	76°	HOLD CLEAR CONTROL
3	50°	—	—	50°	DOWN MOTOR CUTOUT
4	—	5°	5°	—	GATE DOWN
5	—	5°	5°	—	SNUBBING
6	85°			85°	XGCP CONTROL
7	6°	—	—	6°	BELL CONTROL

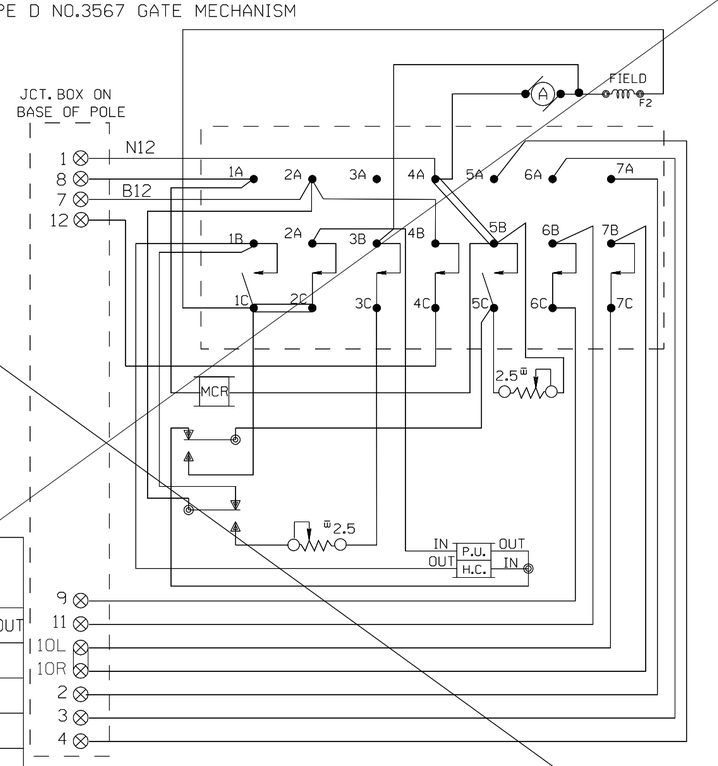

MECHANISM SHOWN IN CLEAR POSITION.

SAFETRAN PRODUCTS MODEL "S" MECHANISM

SHOW TYPE MECH. INSTALLED

JCT. BOX ON BASE POLE

L	R	L	R
1		7	
2		8	
3		9	
4		10	
5		11	
6		12	

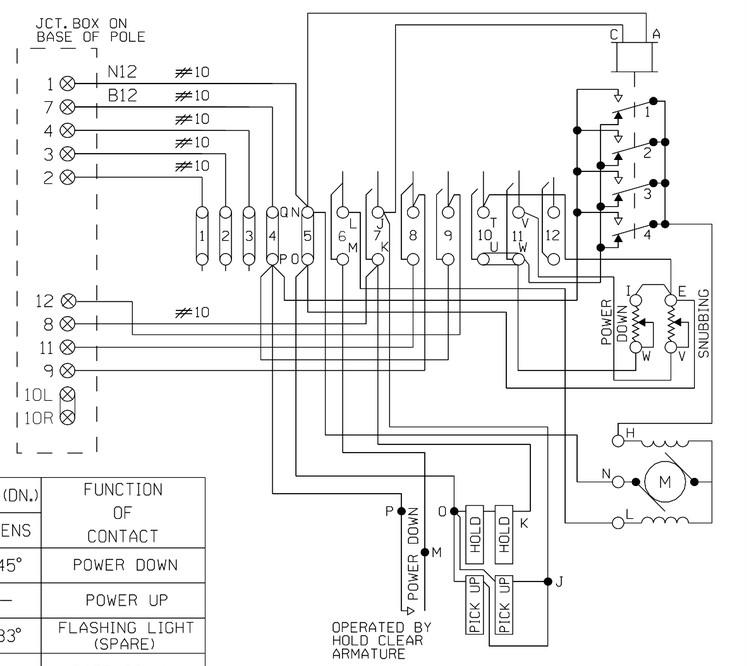

CONT. SPACE NO.	CLEARING (UP) CLOSES	CLEARING (UP) OPENS	RETURNING (DN.) CLOSES	RETURNING (DN.) OPENS	FUNCTION OF CONTACT
6	45°	—	—	45°	POWER DOWN
7	—	89°	89°	—	POWER UP
8	83°	—	—	83°	FLASHING LIGHT (SPARE)
9	—	5°	5°	—	GATE DOWN
10	—	5°	5°	—	HORIZONTAL SNUB
11	—	45°	45°	—	DOWN SNUB
12	—	—	—	—	SPARE

MECHANISM SHOWN IN CLEAR POSITION.

WCH 3593-E

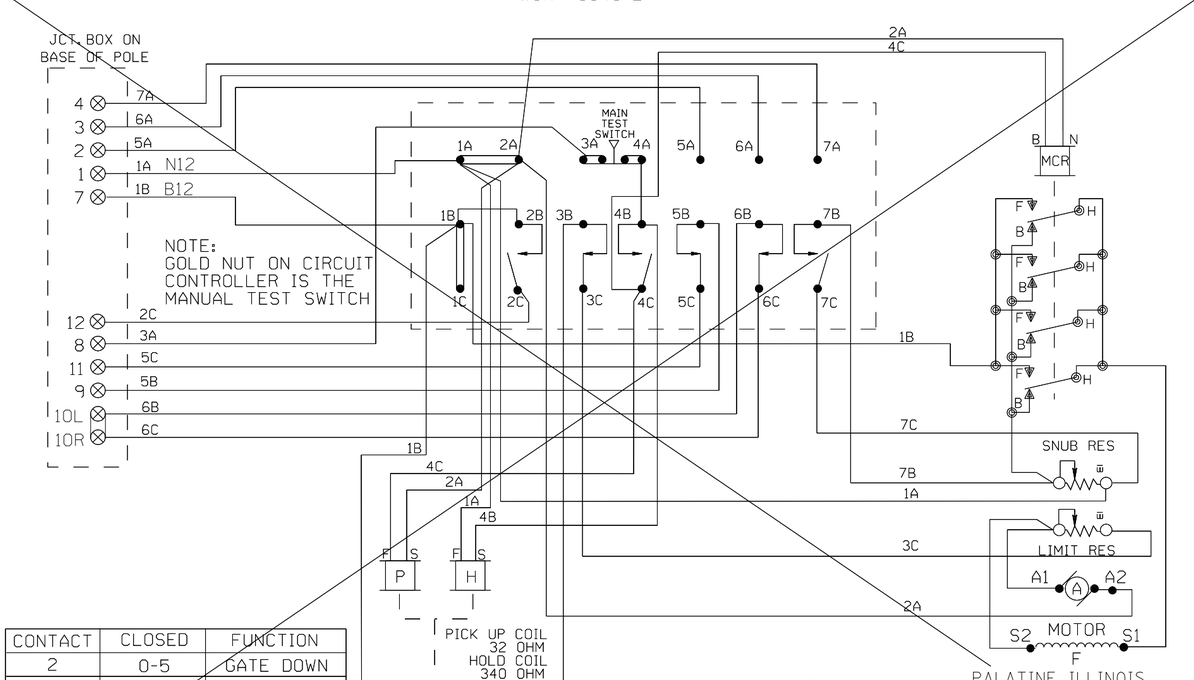

CONTACT	CLOSED	FUNCTION
2	0-5	GATE DOWN
3	45-90	MOTOR DOWN
4	0-89	MOTOR UP
5	86-90	GATE NORM
6	5-90	BELL
7	0-5	SNUB

SHOW TYPE MECH. INSTALLED

PALATINE, ILLINOIS
PALATINE ROAD
M.P. 26.04
HARVARD SUBDIVISION
D.O.T.#176 938A

FOR WIRING GATE "A" & "B"

TO BE VOIDED

REV. 11-15-02
UPGRADED CROSSING CONTROL AS PER THE PALATINE, IL CORRIDOR PROJECT
REC. #11126
5-30-02 JJF
JLK/WITT/WITT/JNM

MODIFICATION LEVEL	
Q.A. LAST LEVEL CHK'D.	CY
LAST LEVEL MOD. THIS TYP.	CK
LAST LEVEL BY DESIGNER.	CZ
CHANGED FROM TYP.? Y/N	N

UNION PACIFIC
QUALITY PRODUCTIVITY SAFETY
SIGNAL DESIGN

DES: WITT.IND.
DIG: WITT.IND.
CHK: J.J.F.
A.F.E. 34166
ID= HAR2604.13X

UNION PACIFIC RAILROAD
EVANSVILLE, WISCONSIN TO CHICAGO, ILLINOIS
C.T.C. CIRCUITS
Office of Sr.AVP Engineering - Signal/TCO OMAHA NEBR.

DATE 3-21-00
SHEET 13
DWG 26.04
HAR

(REV. 4-4-00)(GWIRING.DGN)

WCH 3597

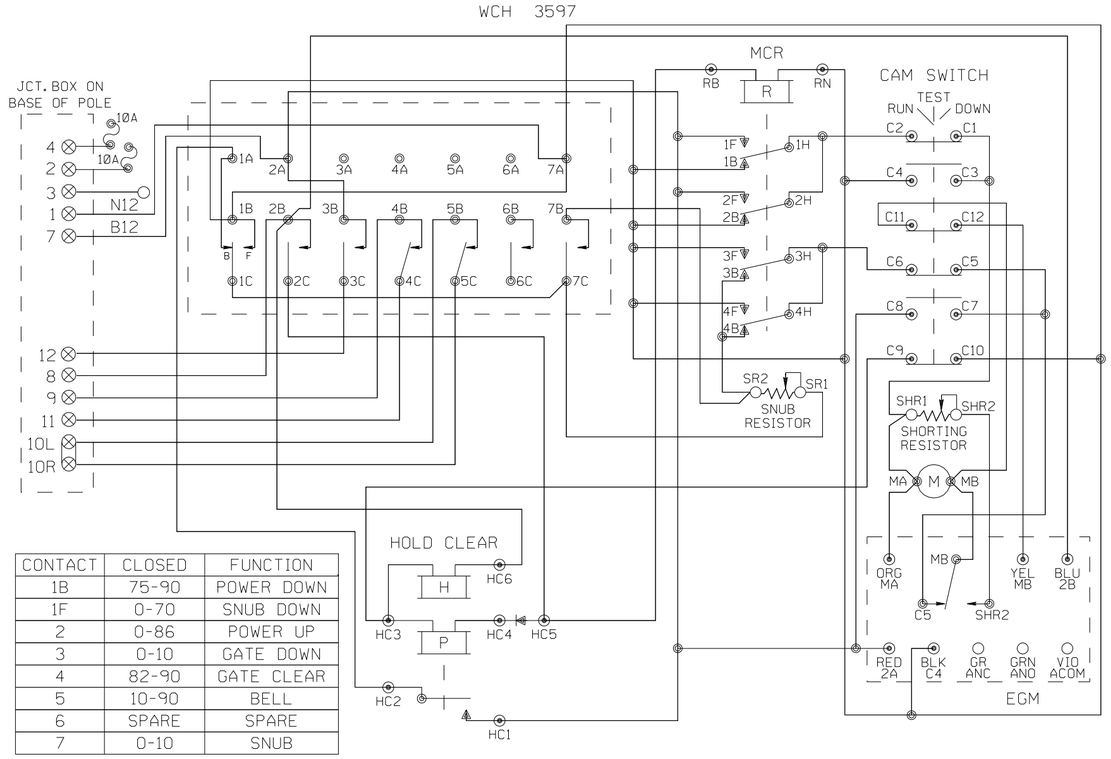

CONTACT	CLOSED	FUNCTION
1B	75-90	POWER DOWN
1F	0-70	SNUB DOWN
2	0-86	POWER UP
3	0-10	GATE DOWN
4	82-90	GATE CLEAR
5	10-90	BELL
6	SPARE	SPARE
7	0-10	SNUB

WCH 3597-RB

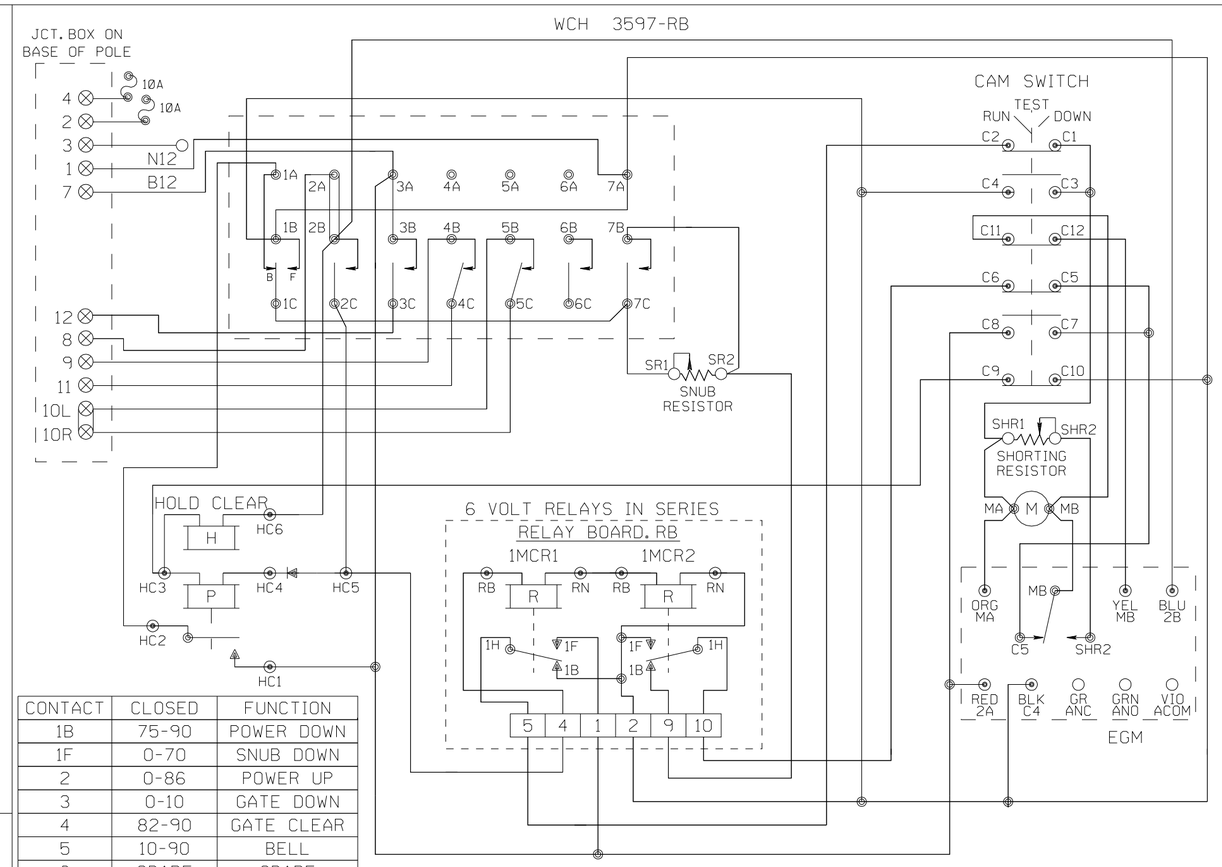

CONTACT	CLOSED	FUNCTION
1B	75-90	POWER DOWN
1F	0-70	SNUB DOWN
2	0-86	POWER UP
3	0-10	GATE DOWN
4	82-90	GATE CLEAR
5	10-90	BELL
6	SPARE	SPARE
7	0-10	SNUB

WCH 3593-E

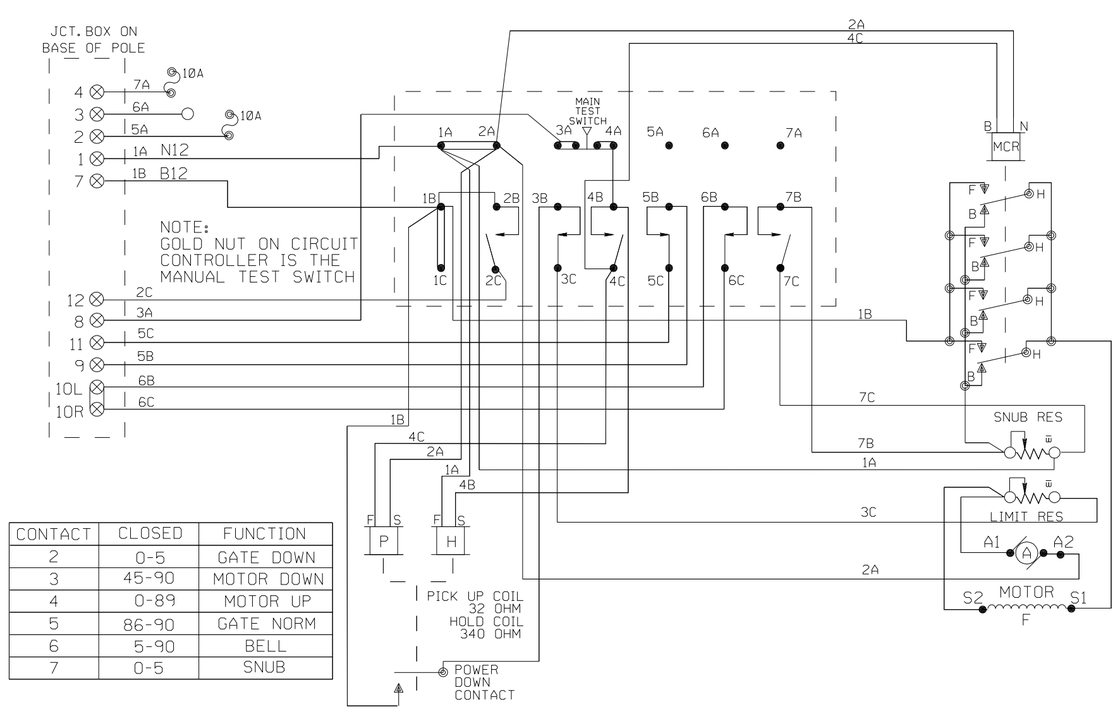

CONTACT	CLOSED	FUNCTION
2	0-5	GATE DOWN
3	45-90	MOTOR DOWN
4	0-89	MOTOR UP
5	86-90	GATE NORM
6	5-90	BELL
7	0-5	SNUB

WCH 3597-E

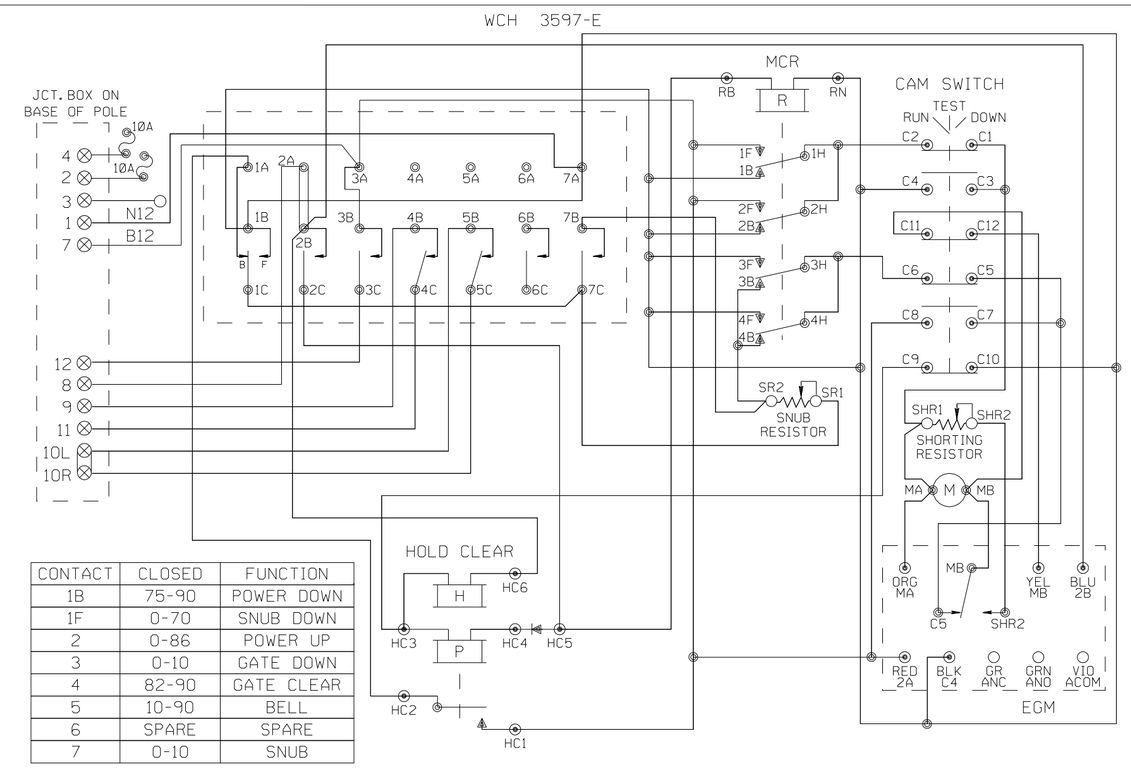

CONTACT	CLOSED	FUNCTION
1B	75-90	POWER DOWN
1F	0-70	SNUB DOWN
2	0-86	POWER UP
3	0-10	GATE DOWN
4	82-90	GATE CLEAR
5	10-90	BELL
6	SPARE	SPARE
7	0-10	SNUB

SHOW TYPE MECH. INSTALLED

ALL MECHANISMS SHOWN IN THE CLEAR POSITION

JCT. BOX ON BASE POLE

L	R	L	R
1		7	
2		8	
3		9	
4		10	
5		11	
6		12	

FOR WIRING GATES "A", "B", "F" & "G"

NEW SHEET

Designed: 08-06-09
INSTALL CANTILEVER AND MEDIAN GATES FOR ROAD EXPANSION.

Rec#: WO#: 87693
IS: /WSD
/JMM/JJF

MODIFICATION LEVEL	
Q. A. LAST LEVEL CHECKED	DS
LAST LEVEL MOD THIS TYPICAL	DS
LAST LEVEL BY DESIGNER	DS
CHANGED FROM TYPICAL?	N

REV 09.02.09 4K GWIRING.7

UNION PACIFIC
QUALITY PRODUCTIVITY SAFETY
SIGNAL DESIGN

Date: 08-06-09
Des: JMM
Chk: WSD
AFE: 87693

UNION PACIFIC RAILROAD

PALATINE, ILLINOIS
PALATINE ROAD
HARVARD SUBDIVISION

Office of Sr AVP Engineering - Signal/TCO Omaha, Nebraska

Sh.: 13
DOT 176937T
MP: 26.04
ID: HAR2604.13X

SAFTRAN MODEL "EM" (GRISWOLD)

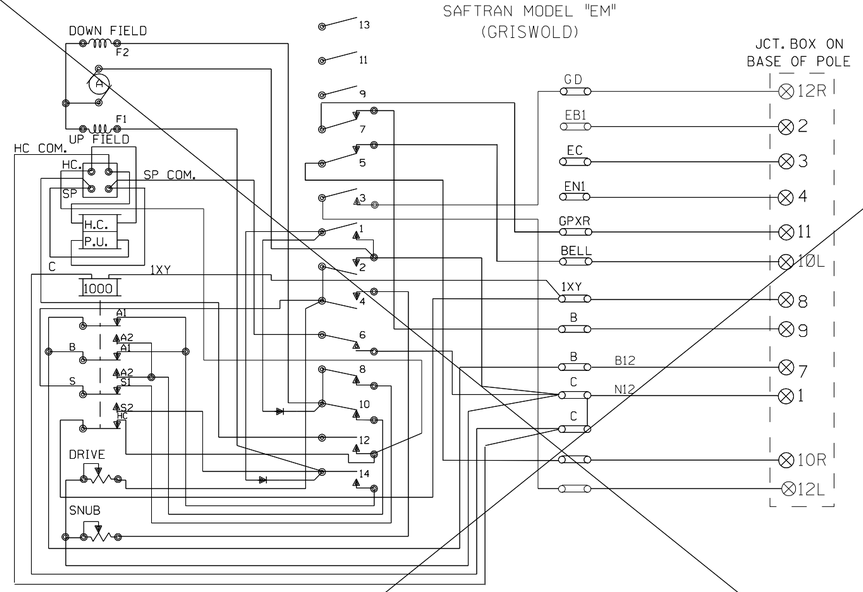

SHOW TYPE MECH. INSTALLED

SPACE NO.	CONTACT OPERATION: CONTACT CLOSED — CLEARING	CONTACT OPERATION: CONTACT CLOSED — RETURNING	CIRCUIT BREAKER FUNCTIONS: USE OF CONTACT
1	40°50°85°90°	90°85°50°40°	CONTROL OF ARC SUPRESSING RECTIFIERS
2	0°10°	10°0°	FINAL DOWN SNUB
3	0°5°	5°0°	GATE DOWN
4	0°44°	44°0°	DOWN SNUB
5	10°90°	90°10°	TO CUT OFF BELL WHEN GATE ARM IS DOWN
6	80°90°	90°80°	CONTROL OF SOLENOID PICK UP
7	80°90°	90°80°	TO CONTROL GPR RELAY & KEEP FLASHING LIGHTS OPERATING UNTIL GATES CLEAR
8	0°5°80°90°	90°80°5°0°	UP SNUB
9	—	—	SPARE
10	45°90°	90°45°	MOTOR CUTOUT(DOWN)
11	—	—	SPARE
12	0°90°	80°0°	OPERATED BY MOTOR CUTOUT SWITCH TO CUT OFF CURRENT FROM SOLENOID PICKUP
13	—	—	NO CAM
14	0°90°	80°0°	MOTOR CUTOUT(UP)

W.R.R.S. CO TYPE D NO.3567 GATE MECHANISM

SHOW TYPE MECH. INSTALLED

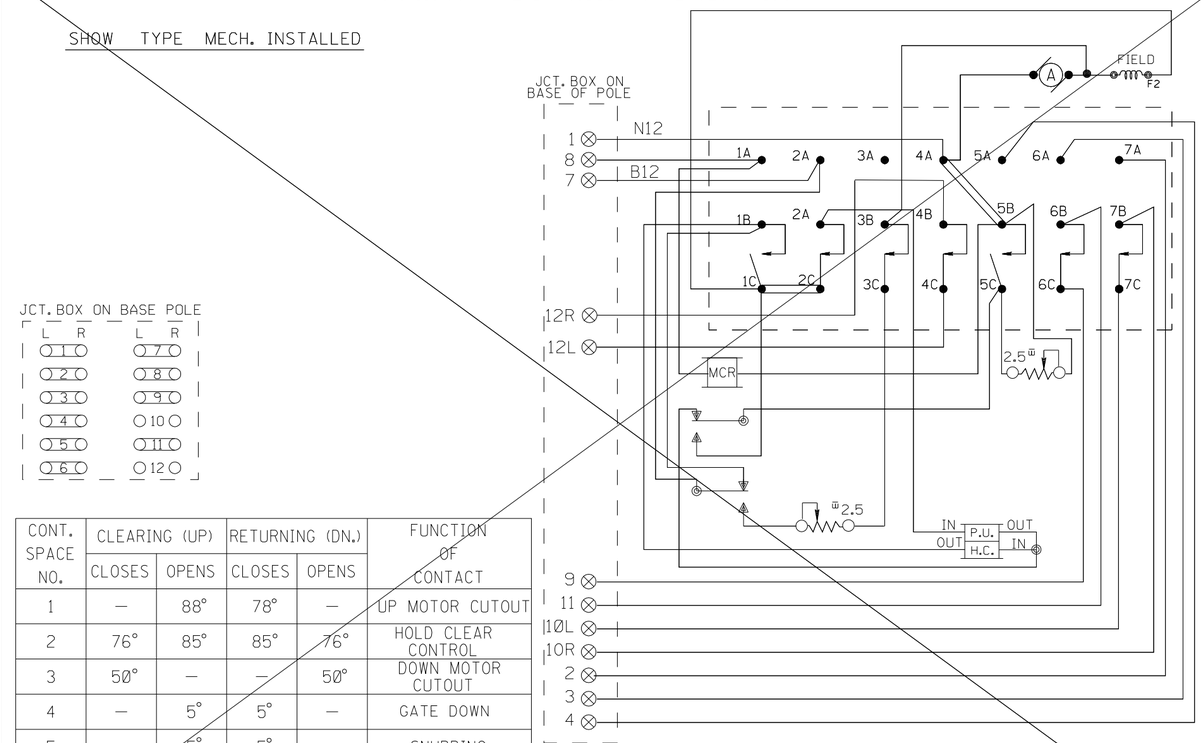

CONT. SPACE NO.	CLEARING (UP) CLOSES	CLEARING (UP) OPENS	RETURNING (DN.) CLOSES	RETURNING (DN.) OPENS	FUNCTION OF CONTACT
1	—	88°	78°	—	UP MOTOR CUTOUT
2	76°	85°	85°	76°	HOLD CLEAR CONTROL
3	50°	—	—	50°	DOWN MOTOR CUTOUT
4	—	5°	5°	—	GATE DOWN
5	—	5°	5°	—	SNUBBING
6	85°			85°	XGCP CONTROL
7	6°	—	—	6°	BELL CONTROL

MECHANISM SHOWN IN CLEAR POSITION.

SAFETRAN PRODUCTS MODEL "S" MECHANISM

MOTOR & SNUB RELAY

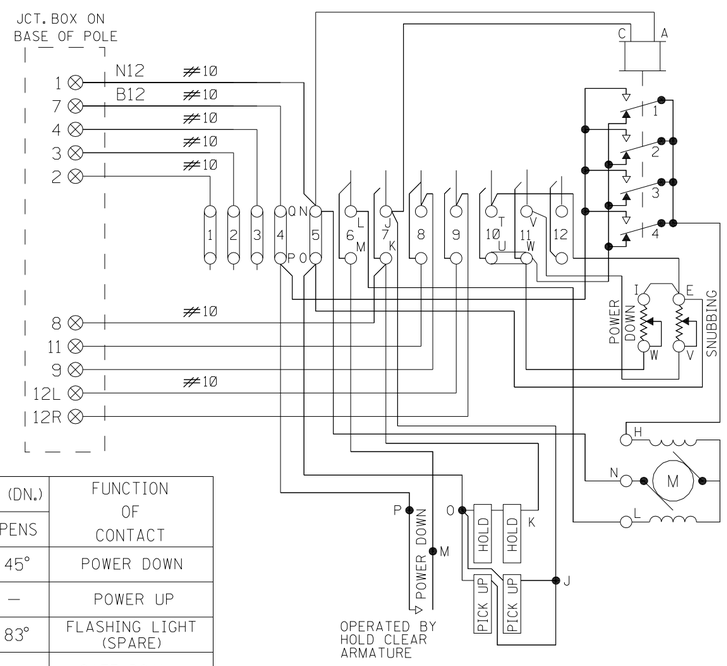

SHOW TYPE MECH. INSTALLED

JCT. BOX ON BASE POLE

L	R	L	R
1		7	
2		8	
3		9	
4		10	
5		11	
6		12	

CONT. SPACE NO.	CLEARING (UP) CLOSES	CLEARING (UP) OPENS	RETURNING (DN.) CLOSES	RETURNING (DN.) OPENS	FUNCTION OF CONTACT
6	45°	—	—	45°	POWER DOWN
7	—	89°	89°	—	POWER UP
8	83°	—	—	83°	FLASHING LIGHT (SPARE)
9	—	5°	5°	—	GATE DOWN
10	—	5°	5°	—	HORIZONTAL SNUB
11	—	45°	45°	—	DOWN SNUB
12	—	—	—	—	SPARE

MECHANISM SHOWN IN CLEAR POSITION.

WCH 3593-E

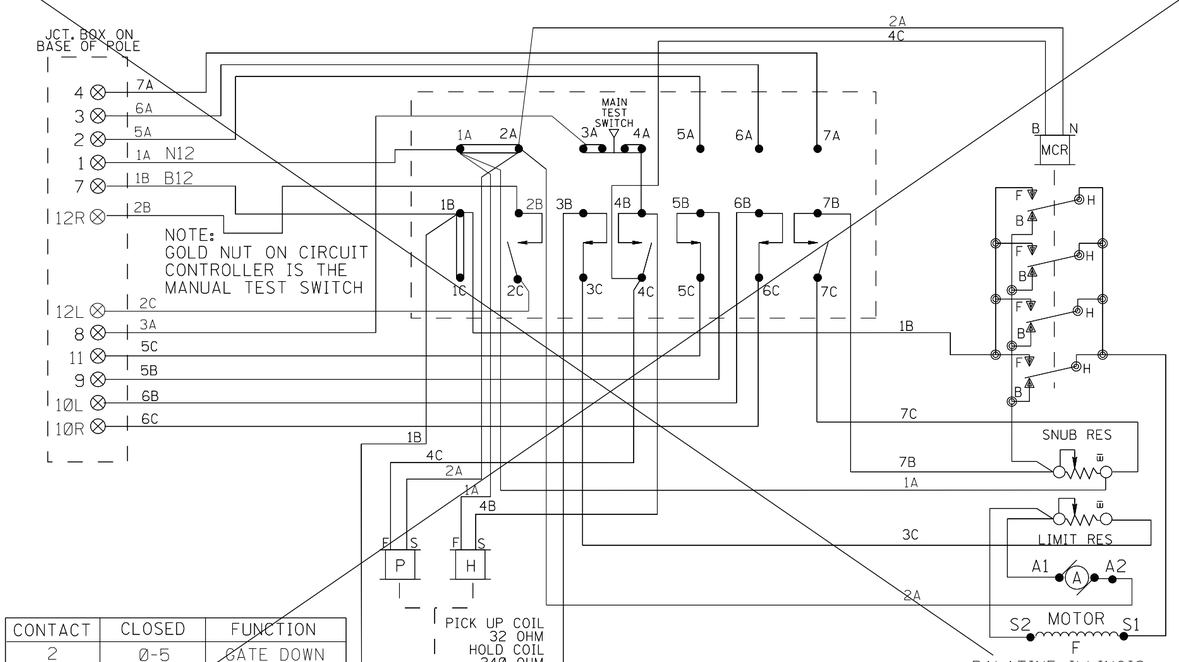

CONTACT	CLOSED	FUNCTION
2	0-5	GATE DOWN
3	45-90	MOTOR DOWN
4	0-89	MOTOR UP
5	86-90	GATE NORM
6	5-90	BELL
7	0-5	SNUB

SHOW TYPE MECH. INSTALLED

TO BE VOIDED

PALATINE, ILLINOIS
PALATINE ROAD
M.P. 26.04
HARVARD SUBDIVISION
D.O.T.#176 938A

FOR WIRING GATE "C" & "D"

REV. 11-15-02
UPGRADED CROSSING CONTROL AS PER THE PALATINE, IL CORRIDOR PROJECT
REC. #11126
5-30-02 JJF
JLK/WITT/WITT/JNM

MODIFICATION LEVEL	
Q.A. LAST LEVEL CHK'D.	CY
LAST LEVEL MOD. THIS TYP.	CK
LAST LEVEL BY DESIGNER.	CZ
CHANGED FROM TYP.? Y/N	N

UNION PACIFIC
QUALITY PRODUCTIVITY SAFETY
SIGNAL DESIGN

DES: WITT.IND.
DIG: WITT.IND.
CHK: J.J.F.
A.F.E. 34166
ID= HAR2604.14X

UNION PACIFIC RAILROAD
EVANSVILLE, WISCONSIN TO CHICAGO, ILLINOIS
C.T.C. CIRCUITS
Office of Sr.AVP Engineering - Signal/TCO OMAHA NEBR.

DATE 3-21-00
SHEET 14
DWG 26.04
HAR

(REV. 4-4-00)(4GWIRING.7)

WCH 3597

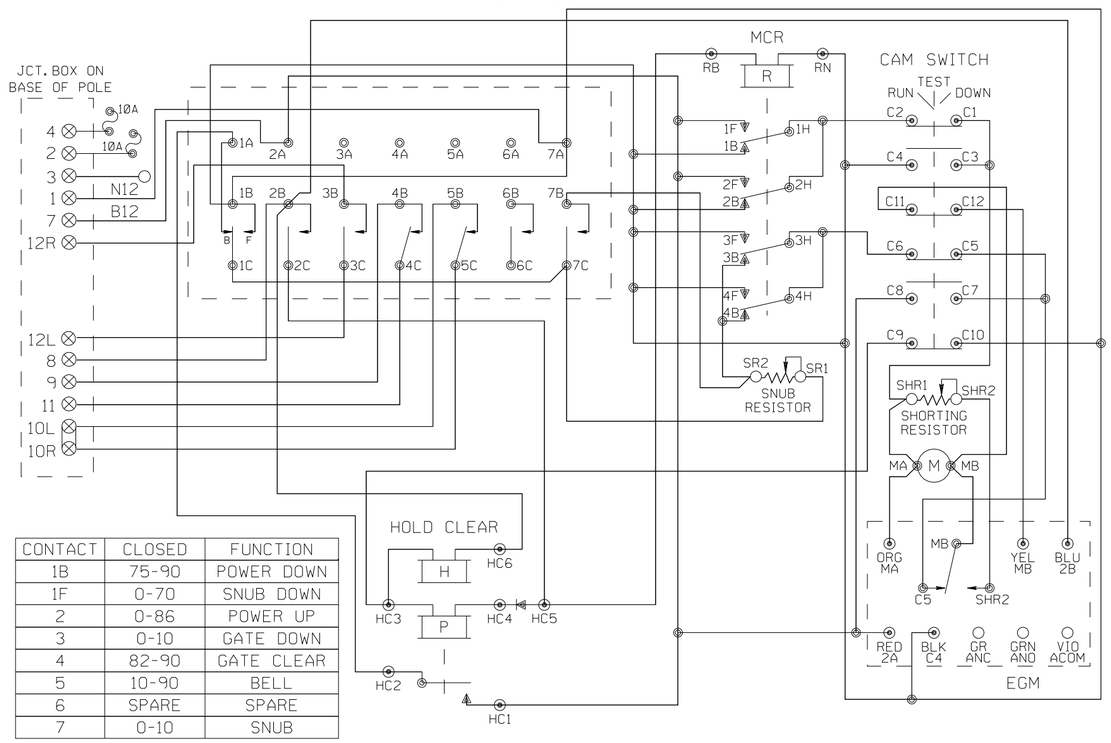

CONTACT	CLOSED	FUNCTION
1B	75-90	POWER DOWN
1F	0-70	SNUB DOWN
2	0-86	POWER UP
3	0-10	GATE DOWN
4	82-90	GATE CLEAR
5	10-90	BELL
6	SPARE	SPARE
7	0-10	SNUB

WCH 3597-RB

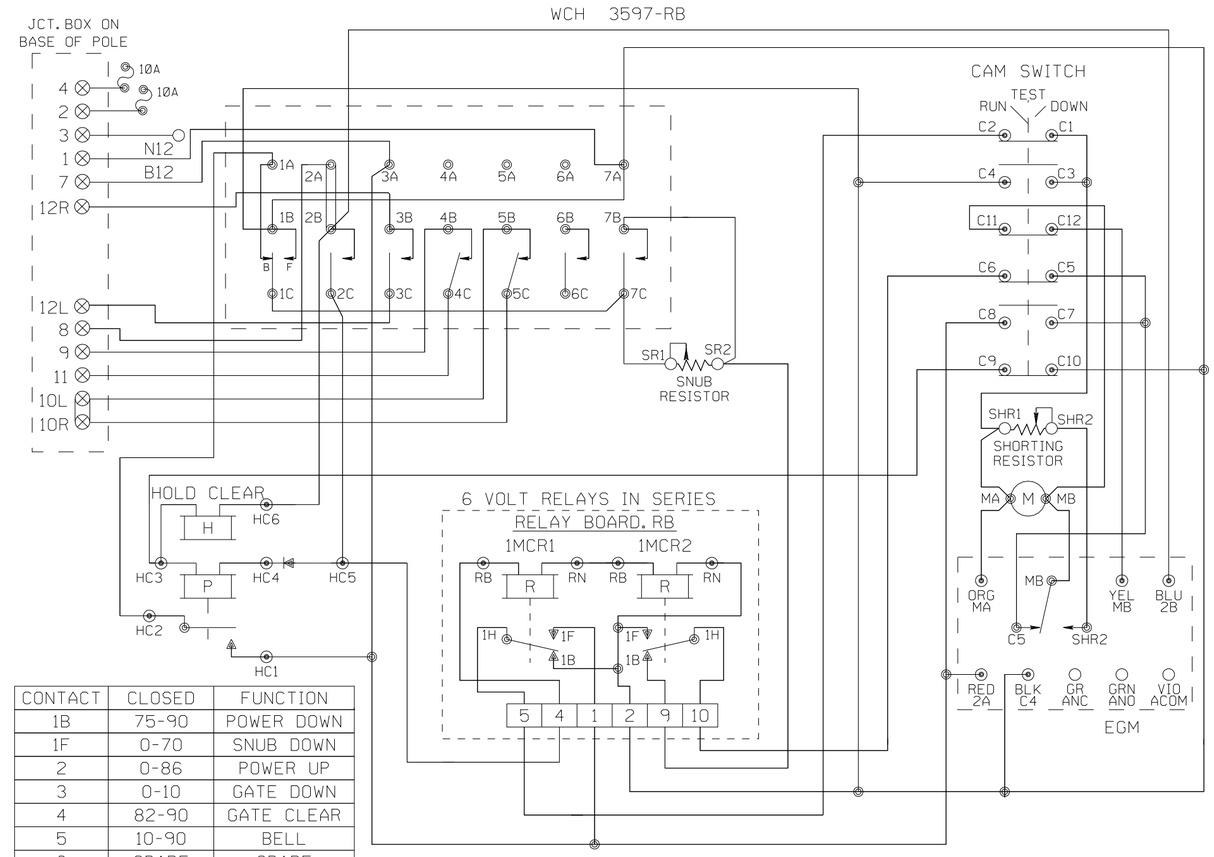

CONTACT	CLOSED	FUNCTION
1B	75-90	POWER DOWN
1F	0-70	SNUB DOWN
2	0-86	POWER UP
3	0-10	GATE DOWN
4	82-90	GATE CLEAR
5	10-90	BELL
6	SPARE	SPARE
7	0-10	SNUB

WCH 3593-E

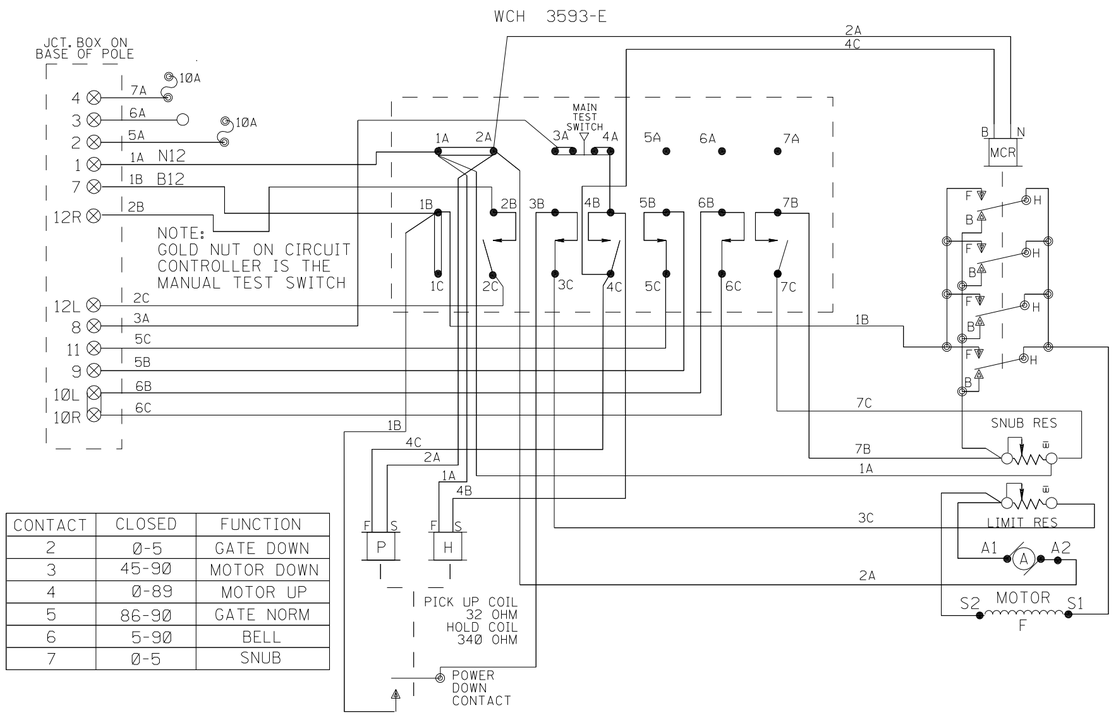

CONTACT	CLOSED	FUNCTION
2	0-5	GATE DOWN
3	45-90	MOTOR DOWN
4	0-89	MOTOR UP
5	86-90	GATE NORM
6	5-90	BELL
7	0-5	SNUB

SHOW TYPE MECH. INSTALLED

ALL MECHANISM SHOWN IN CLEAR POSITION

TYPICAL JCT. BOX BASE ON POLE

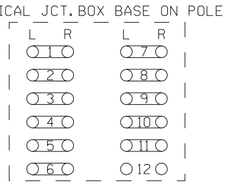

WCH 3597-E

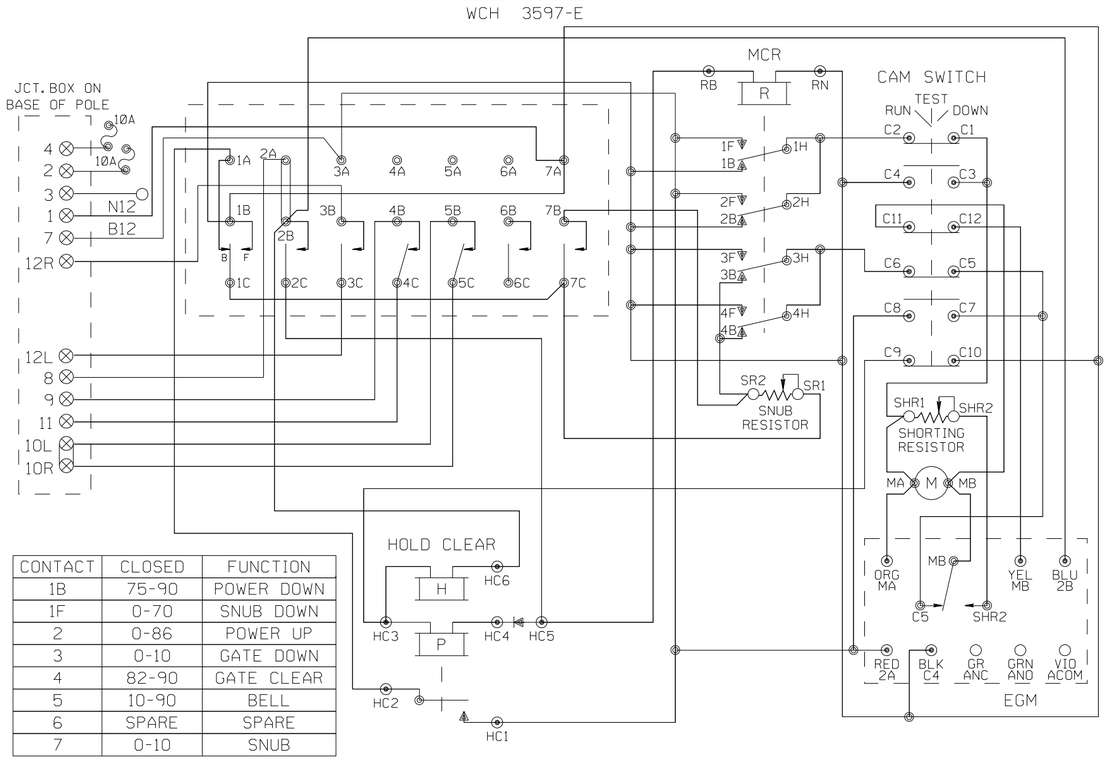

CONTACT	CLOSED	FUNCTION
1B	75-90	POWER DOWN
1F	0-70	SNUB DOWN
2	0-86	POWER UP
3	0-10	GATE DOWN
4	82-90	GATE CLEAR
5	10-90	BELL
6	SPARE	SPARE
7	0-10	SNUB

FOR WIRING GATES "C", "D", "H" & "I"

NEW SHEET

Designed: 08-06-09
INSTALL CANTILEVER AND MEDIAN GATES FOR ROAD EXPANSION.

Rec#: WO#: 87693
IS: /WSD
/JMM/JJF

MODIFICATION LEVEL	
Q. A. LAST LEVEL CHECKED	DS
LAST LEVEL MOD THIS TYPICAL	DS
LAST LEVEL BY DESIGNER	DS
CHANGED FROM TYPICAL?	N

REV 09.02.09 4K 4GWIRING.8

UNION PACIFIC
QUALITY PRODUCTIVITY SAFETY
SIGNAL DESIGN

Date: 08-06-09
Des: JMM
Chk: WSD
AFE: 87693

UNION PACIFIC RAILROAD

PALATINE, ILLINOIS
PALATINE ROAD
HARVARD SUBDIVISION

Office of Sr AVP Engineering - Signal/TCO Omaha, Nebraska

Sh.: 14
DOT 176937T
MP: 26.04
ID: HAR2604.14X

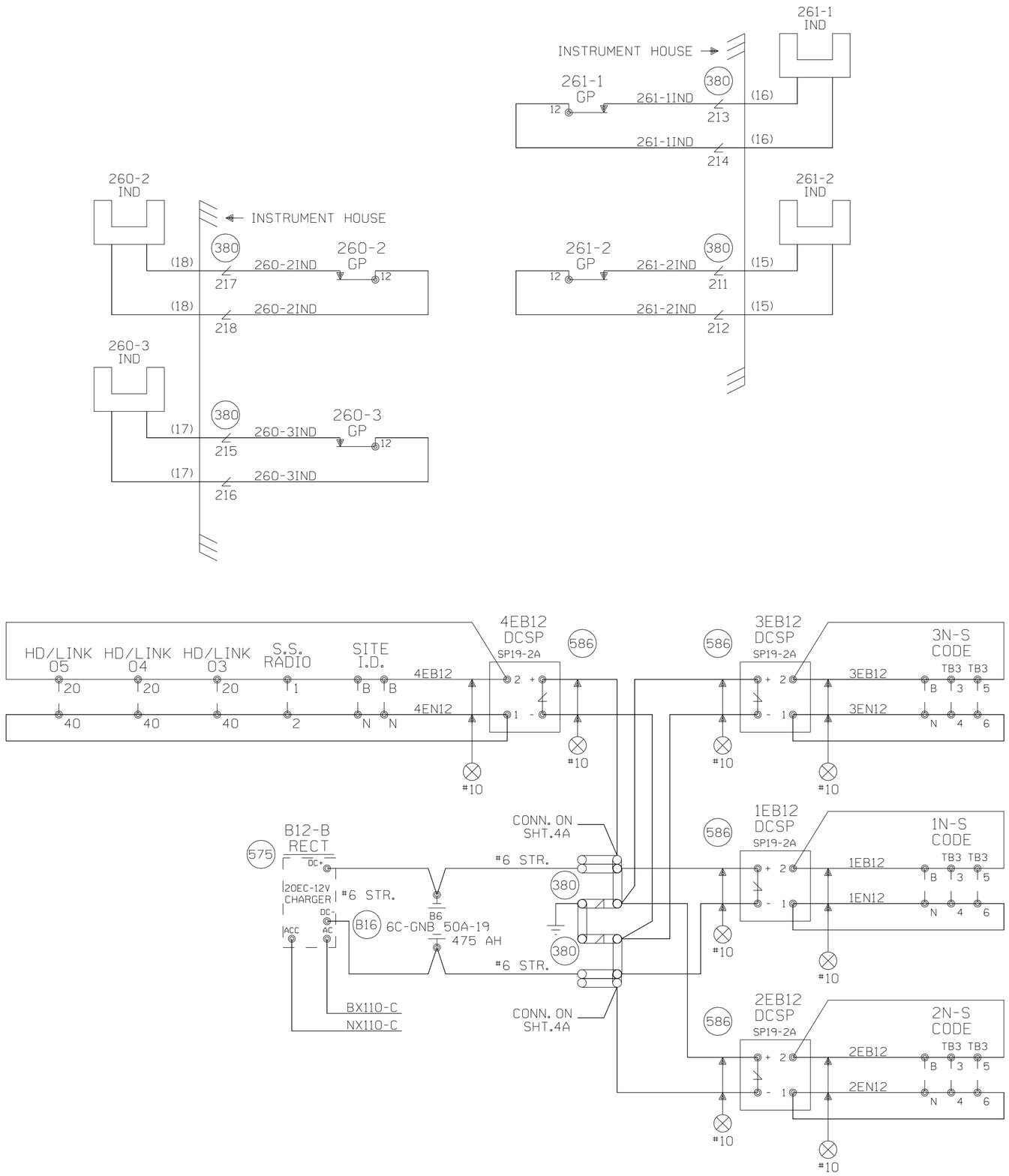

~~X~~ ~~X~~ = OUT

○ = EXISTING/REVISE IF AC'D

CABLE NO. (15) 2C #6 U.G.C.
CABLE NO. (16) 2C #6 U.G.C.
CABLE NO. (17) 2C #6 U.G.C.
CABLE NO. (18) 2C #6 U.G.C.

PALATINE, ILLINOIS
PALATINE ROAD
M.P. 26.04
HARVARD SUBDIVISION
D.O.T.#176 938A
D.O.T.#176937T

Designed: 08-06-09
INSTALL CANTILEVER AND MEDIAN GATES FOR ROAD EXPANSION.

Rec#: WO#: 87693
IS: /WSD
/JMM/JTB

REV. 11-15-02
UPGRADED CROSSING CONTROL AS PER THE PALATINE, IL CORRIDOR PROJECT
REC. #11126
5-30-02 RDD
JLK/WITT/WITT/JNM

MODIFICATION LEVEL	
Q.A. LAST LEVEL CHK'D.	CI
LAST LEVEL MOD. THIS TYP.	CK
LAST LEVEL BY DESIGNER.	CZ
CHANGED FROM TYP.? Y/N	Y

UNION PACIFIC
QUALITY PRODUCTIVITY SAFETY
SIGNAL DESIGN

DES: WITT.IND.
DIG: WITT.IND.
CHK: R.D.D.
A.F.E. 34166
ID= HAR2604.15S

UNION PACIFIC RAILROAD EVANSVILLE, WISCONSIN TO CHICAGO, ILLINOIS C.T.C. CIRCUITS

Office of Sr.AVP Engineering - Signal/TCO OMAHA NEBR.

DATE 3-21-00
SHEET 15
DWG 26.04
HAR

(REV. 6-1-98) (REMOTE.2)

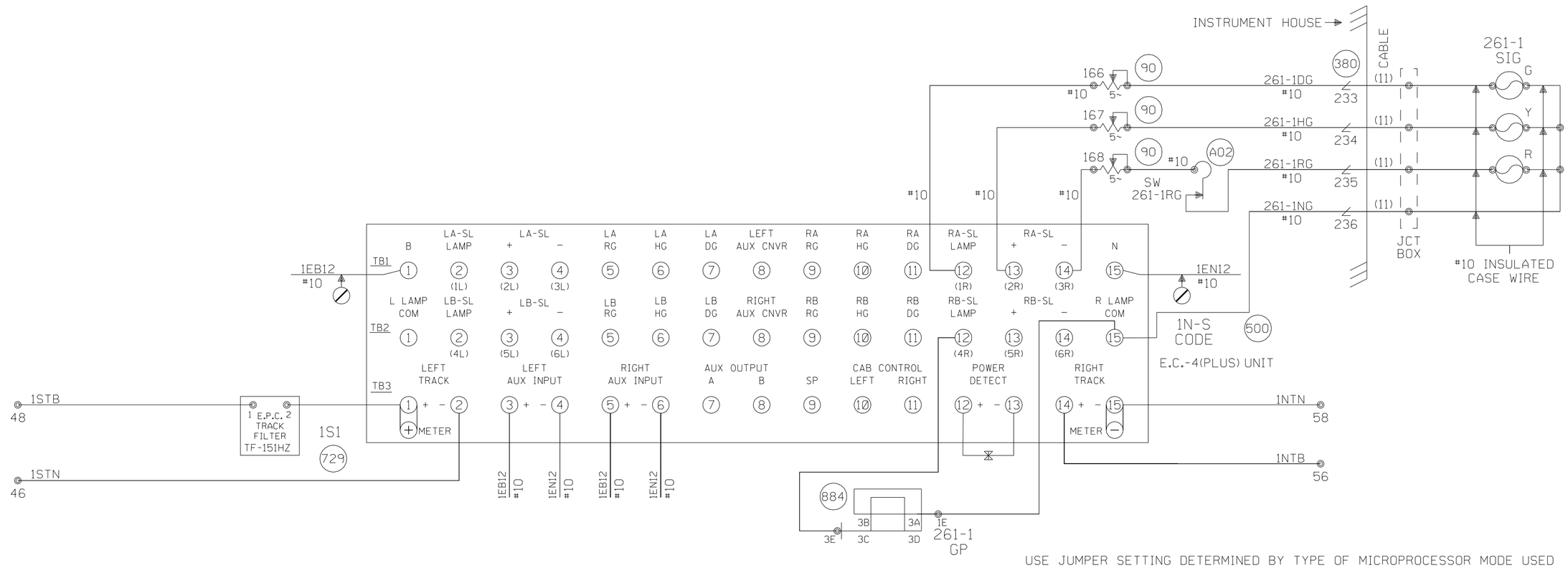

USE JUMPER SETTING DETERMINED BY TYPE OF MICROPROCESSOR MODE USED
(REMOVE OR CROSS OUT THE UNUSED JUMPER SETTINGS)

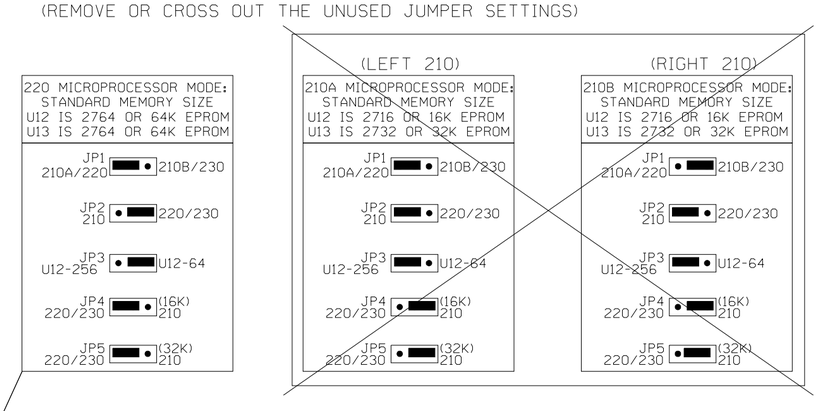

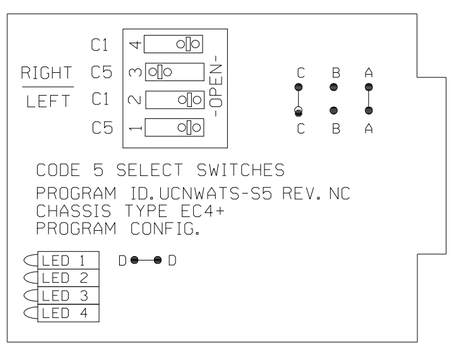

215D MODULE

215D "A" CONFIGURATION = "B" JUMPERED, "A","C" & "D" OPEN
215D "B" CONFIGURATION = "B" OPEN, "A","C" & "D" JUMPERED

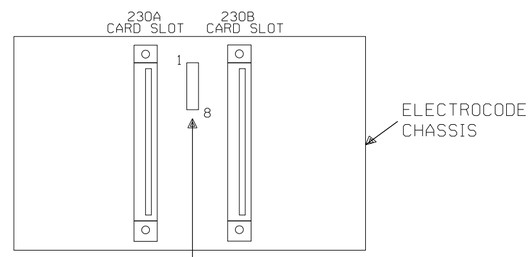

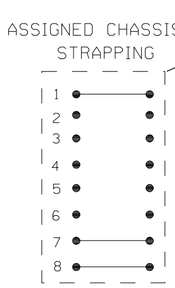

SHUNT LOCATED ON BACK OF CHASSIS
BETWEEN 230A & 230B CARD SLOT

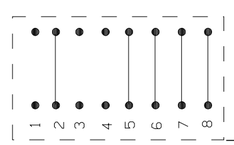

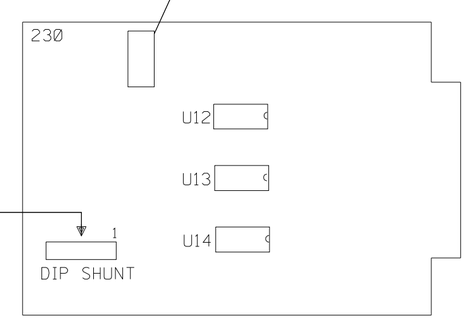

230 MICROPROCESSOR

NOTES:

⊘ = OBSERVE CORRECT POLARITY
EQUIPMENT WILL BE DAMAGED
IF CONNECTIONS ARE REVERSED.

ENSURE TRACK POLARITY IS
TRANSPOSED ACROSS ALL
INSULATED JOINTS.

⧗ = TEST TERMINAL

PALATINE, ILLINOIS
PALATINE ROAD
M.P. 26.04
HARVARD SUBDIVISION
D.O.T.#176 938A

D.O.T.#176937T

CABLE NO(11)-5C.NO.6 HSE. TO SIGNAL 261-1

~~X~~ = OUT

◯ = EXISTING/REVISE IF AC'D

Designed: 08-06-09
INSTALL CANTILEVER
AND MEDIAN GATES FOR
ROAD EXPANSION.

Rec#: WO#: 87693
IS: /WSD
/ /JMM/JTB

REV. 11-15-02
UPGRADED CROSSING
CONTROL AS PER THE
PALATINE, IL
CORRIDOR PROJECT
REC. #11126
5-30-02 RDD
JLK/WITT/WITT/JNM

MODIFICATION LEVEL	
Q.A. LAST LEVEL CHK'D.	CY
LAST LEVEL MOD. THIS TYP.	CQ
LAST LEVEL BY DESIGNER.	CZ
CHANGED FROM TYP.? Y/N	Y

UNION PACIFIC
QUALITY PRODUCTIVITY SAFETY
SIGNAL DESIGN

DES: WITT.IND.
DIG: WITT.IND.
CHK: R.D.D.
A.F.E. 34166
ID= HAR2604.16S

UNION PACIFIC RAILROAD
EVANSVILLE, WISCONSIN TO
CHICAGO, ILLINOIS
C.T.C. CIRCUITS
Office of Sr.AVP Engineering - Signal/TCO OMAHA NEBR.

DATE 3-21-00
SHEET 16
DWG 26.04
HAR

(REV. 4/4/00)(1TE4INTC.1)

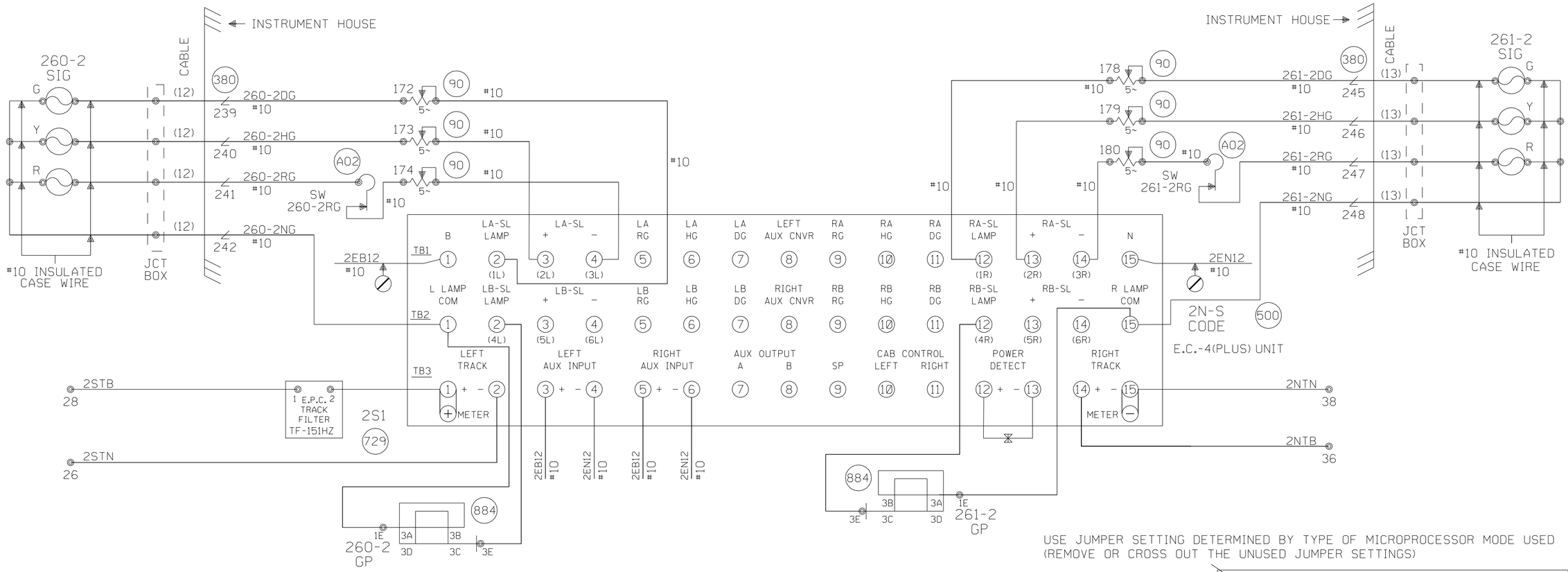

USE JUMPER SETTING DETERMINED BY TYPE OF MICROPROCESSOR MODE USED
(REMOVE OR CROSS OUT THE UNUSED JUMPER SETTINGS)

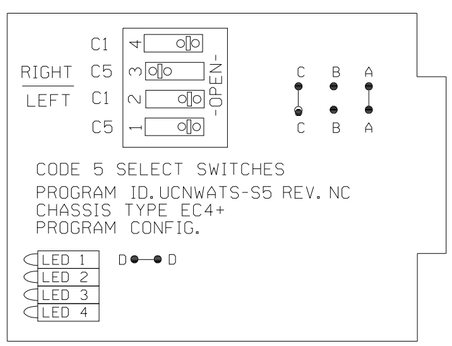

215D MODULE

215D "A" CONFIGURATION = "B" JUMPERED, "A","C" & "D" OPEN
215D "B" CONFIGURATION = "B" OPEN, "A","C" & "D" JUMPERED

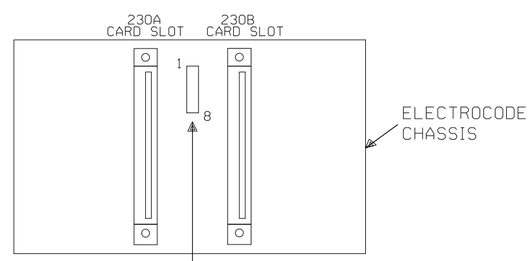

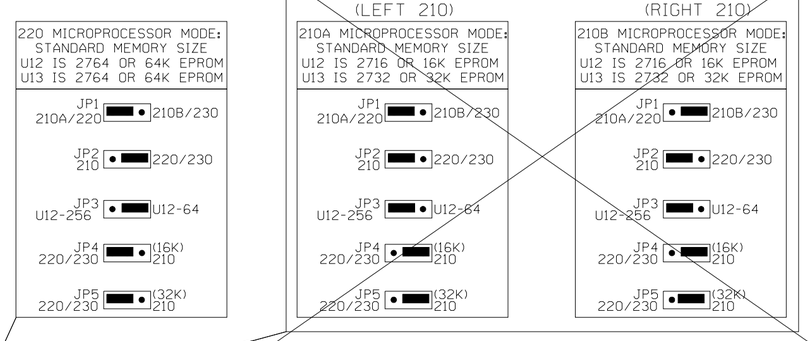

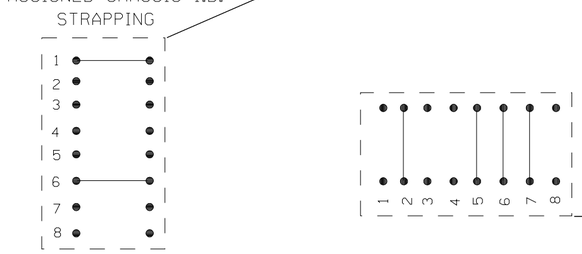

SHUNT LOCATED ON BACK OF CHASSIS
BETWEEN 230A & 230B CARD SLOT

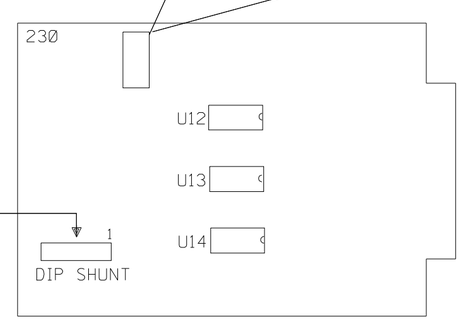

230 MICROPROCESSOR

NOTES:

⊘ = OBSERVE CORRECT POLARITY
EQUIPMENT WILL BE DAMAGED
IF CONNECTIONS ARE REVERSED.

ENSURE TRACK POLARITY IS
TRANSPOSED ACROSS ALL
INSULATED JOINTS.

⧗ = TEST TERMINAL

PALATINE, ILLINOIS
PALATINE ROAD
M.P. 26.04
HARVARD SUBDIVISION
D.O.T.#176 938A
D.O.T.#176937T

CABLE NO(12)-5C.NO.6 HSE. TO SIGNAL 260-2
CABLE NO(13)-5C.NO.6 HSE. TO SIGNAL 261-2

—X—X— = OUT

◯ = EXISTING/REVISE IF AC'D

Designed: 08-06-09
INSTALL CANTILEVER AND MEDIAN GATES FOR ROAD EXPANSION.
Rec#: WO#: 87693
IS: /WSD
/ /JMM/JTB

REV. 11-15-02
UPGRADED CROSSING CONTROL AS PER THE PALATINE, IL CORRIDOR PROJECT
REC. #11126
5-30-02 RDD
JLK/WITT/WITT/JNM

MODIFICATION LEVEL	
Q.A. LAST LEVEL CHK'D.	CY
LAST LEVEL MOD. THIS TYP.	CQ
LAST LEVEL BY DESIGNER.	CZ
CHANGED FROM TYP.? Y/N	Y

UNION PACIFIC
QUALITY PRODUCTIVITY SAFETY
SIGNAL DESIGN

DES: WITT.IND.
DIG: WITT.IND.
CHK: R.D.D.
A.F.E. 34166
ID= HAR2604.17S

UNION PACIFIC RAILROAD
EVANSVILLE, WISCONSIN TO
CHICAGO, ILLINOIS
C.T.C. CIRCUITS
Office of Sr.AVP Engineering - Signal/TCO OMAHA NEBR.

DATE 3-21-00
SHEET 17
DWG 26.04
HAR

(REV. 4/4/00)(1TE4INTC.1)

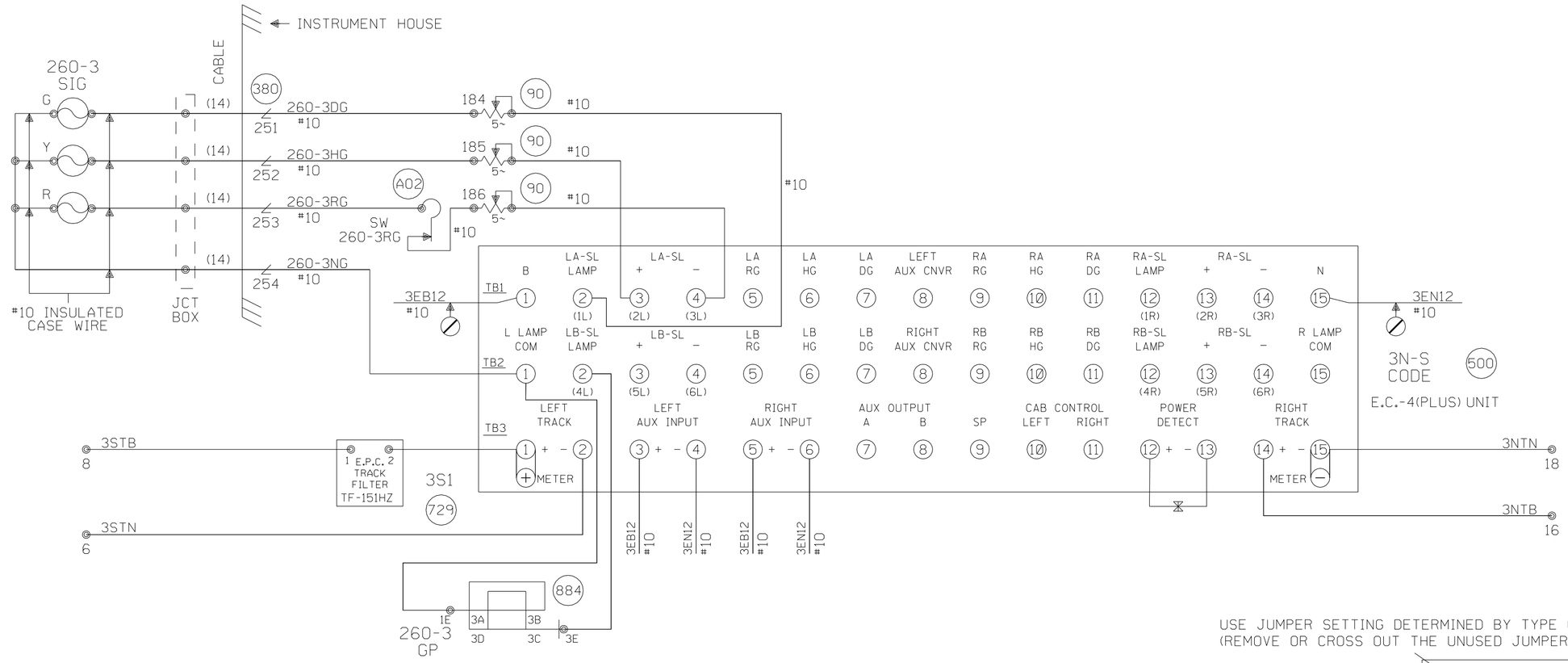

USE JUMPER SETTING DETERMINED BY TYPE OF MICROPROCESSOR MODE USED
(REMOVE OR CROSS OUT THE UNUSED JUMPER SETTINGS)

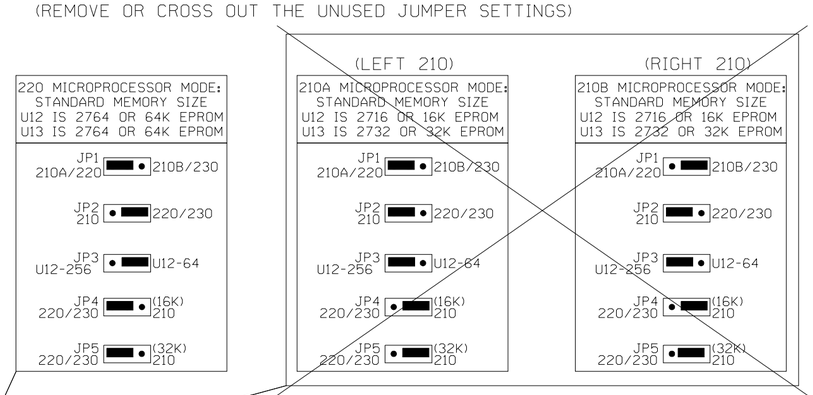

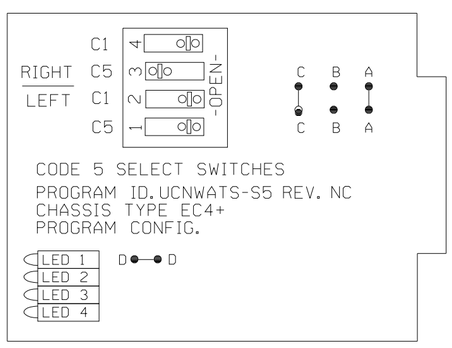

215D MODULE

215D "A" CONFIGURATION = "B" JUMPERED, "A","C" & "D" OPEN
215D "B" CONFIGURATION = "B" OPEN, "A","C" & "D" JUMPERED

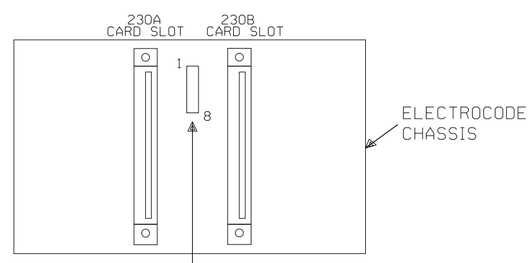

ASSIGNED CHASSIS I.D. STRAPPING

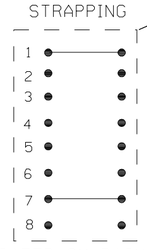

SHUNT LOCATED ON BACK OF CHASSIS BETWEEN 230A & 230B CARD SLOT

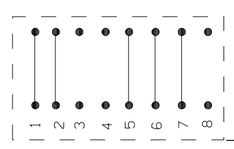

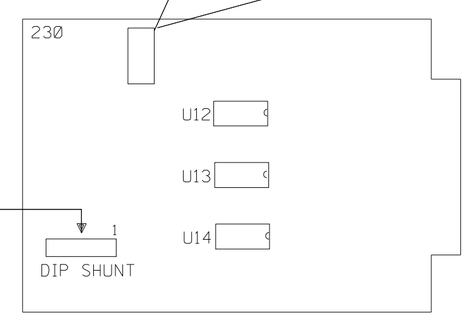

230 MICROPROCESSOR

NOTES:

⊘ = OBSERVE CORRECT POLARITY EQUIPMENT WILL BE DAMAGED IF CONNECTIONS ARE REVERSED.

ENSURE TRACK POLARITY IS TRANSPOSED ACROSS ALL INSULATED JOINTS.

⧗ = TEST TERMINAL

PALATINE, ILLINOIS
PALATINE ROAD
M.P. 26.04
HARVARD SUBDIVISION
D.O.T.#176 938A

D.O.T.#176937T

~~X~~ ~~X~~ = OUT

◯ = EXISTING/REVISE IF AC'D

CABLE NO(14)-5C.N0.6 HSE. TO SIGNAL 260-3

Designed: 08-06-09
INSTALL CANTILEVER AND MEDIAN GATES FOR ROAD EXPANSION.
Rec#: WO#: 87693
IS: /WSD
/ /JMM/JTB

REV. 11-15-02
UPGRADED CROSSING CONTROL AS PER THE PALATINE, IL CORRIDOR PROJECT
REC. #11126
5-30-02 RDD
JLK/WITT/WITT/JNM

MODIFICATION LEVEL	
Q.A. LAST LEVEL CHK'D.	CY
LAST LEVEL MOD. THIS TYP.	CQ
LAST LEVEL BY DESIGNER.	CZ
CHANGED FROM TYP.? Y/N	Y

UNION PACIFIC
QUALITY PRODUCTIVITY SAFETY
SIGNAL DESIGN

DES: WITT.IND.
DIG: WITT.IND.
CHK: R.D.D.
A.F.E. 34166
ID= HAR2604.18S

UNION PACIFIC RAILROAD
EVANSVILLE, WISCONSIN TO CHICAGO, ILLINOIS
C.T.C. CIRCUITS
Office of Sr.AVP Engineering - Signal/TCO OMAHA NEBR.

DATE 3-21-00
SHEET 18
DWG 26.04
HAR

(REV. 4/4/00)(1TE4INTC.1)

HD LINKER 03

MODULE SIN	7.802.163.783.03	
MCF FILE NAME	78303001 .MCF	
FIELD UCN		
IN SERVICE UCN		
LEFT NEIGHBOR SIN / M.P.	7.802.163.781.03	MP 26.12
RIGHT NEIGHBOR SIN / M.P.	7.802.163.785.03	MP 25.71
LOWER ADJACENT ATCS ADDRESS TX/RX FREQ	. MHZ	
LOWER TX/RX FREQUENCY SELECTION REGISTER 61.62		
UPPER ADJACENT ATCS ADDRESS TX/RX FREQ	. MHZ	
UPPER TX/RX FREQUENCY SELECTION REGISTER 81.82		
UPPER ADJACENT ATCS ADDRESS REGISTERS 90,91		
LEFT NEIGHBOR PLAN		
RIGHT NEIGHBOR PLAN		

HD LINKER 04

MODULE SIN	7.802.163.783.04	
MCF FILE NAME	78304001 .MCF	
FIELD UCN		
IN SERVICE UCN		
LEFT NEIGHBOR SIN / M.P.	. . . .	RC.
RIGHT NEIGHBOR SIN / M.P.	. . . .	RC.
LOWER ADJACENT ATCS ADDRESS TX/RX FREQ	. MHZ	
LOWER TX/RX FREQUENCY SELECTION REGISTER 61.62		
UPPER ADJACENT ATCS ADDRESS TX/RX FREQ	. MHZ	
UPPER TX/RX FREQUENCY SELECTION REGISTER 81.82		
UPPER ADJACENT ATCS ADDRESS REGISTERS 90,91		
LEFT NEIGHBOR PLAN		
RIGHT NEIGHBOR PLAN		

HD LINKER 05

MODULE SIN	7.802.163.783.05	
MCF FILE NAME	78305001 .MCF	
FIELD UCN		
IN SERVICE UCN		
LEFT NEIGHBOR SIN / M.P.	. . . .	RC.
RIGHT NEIGHBOR SIN / M.P.	. . . .	RC.
LOWER ADJACENT ATCS ADDRESS TX/RX FREQ	. MHZ	
LOWER TX/RX FREQUENCY SELECTION REGISTER 61.62		
UPPER ADJACENT ATCS ADDRESS TX/RX FREQ	. MHZ	
UPPER TX/RX FREQUENCY SELECTION REGISTER 81.82		
UPPER ADJACENT ATCS ADDRESS REGISTERS 90,91		
LEFT NEIGHBOR PLAN		
RIGHT NEIGHBOR PLAN		

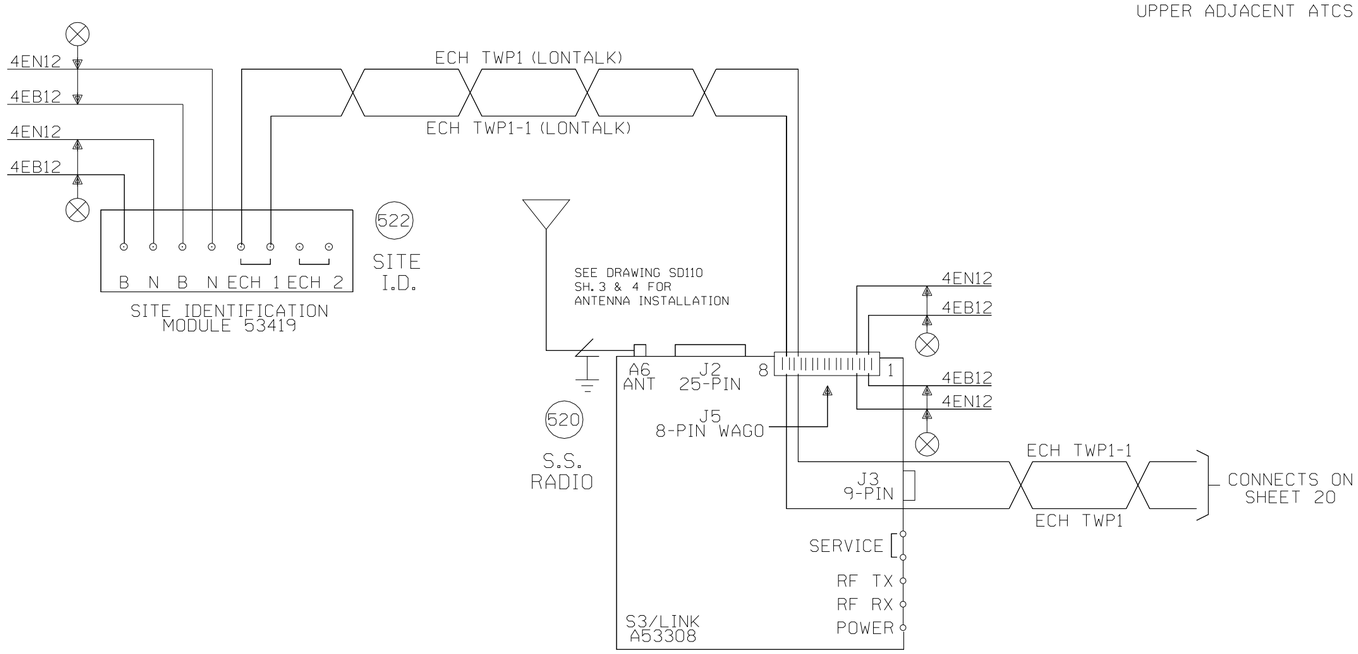

NOTES:

1. ALL ECHELON WIRES MUST BE A SHIELDED TWISTED PAIR, PREFERABLY MADE BY BELDON. MAXIMUM WIRE SIZE IS 16 AWG.
2. MAKE ALL ECHELON WIRES AS SHORT AS POSSIBLE.
3. POLYPHASER SHOULD BE LOCATED NO MORE THAN 17 INCHES FROM THE ANTENNA CONNECTION ON THE RADIO.

—X—X— = OUT

◯ = EXISTING/REVISE IF AC'D

PALATINE, ILLINOIS
PALATINE ROAD
M.P. 26.04
HARVARD SUBDIVISION
D.O.T.#176 938A

D.O.T.#176937T

Designed: 08-06-09
INSTALL CANTILEVER AND MEDIAN GATES FOR ROAD EXPANSION.

Rec#: WO#: 87693
IS: /WSD
/JMM/JTB

REV. 11-15-02
UPGRADED CROSSING CONTROL AS PER THE PALATINE, IL CORRIDOR PROJECT
REC. #11126
5-30-02 JJF
JLK/WITT/WITT/JNM

MODIFICATION LEVEL	
Q.A. LAST LEVEL CHK'D.	CY
LAST LEVEL MOD. THIS TYP.	CK
LAST LEVEL BY DESIGNER.	CZ
CHANGED FROM TYP.? Y/N	Y

UNION PACIFIC
QUALITY PRODUCTIVITY SAFETY
SIGNAL DESIGN

DES: WITT.IND.
DIG: WITT.IND.
CHK: J.J.F.
A.F.E. 34166
ID= HAR2604.19X

UNION PACIFIC RAILROAD
EVANSVILLE, WISCONSIN TO CHICAGO, ILLINOIS
C.T.C. CIRCUITS
Office of Sr.AVP Engineering - Signal/TCO OMAHA NEBR.

DATE 3-21-00
SHEET 19
DWG 26.04
HAR

(REV. 4-4-00)(CIRCUIT.TYP)