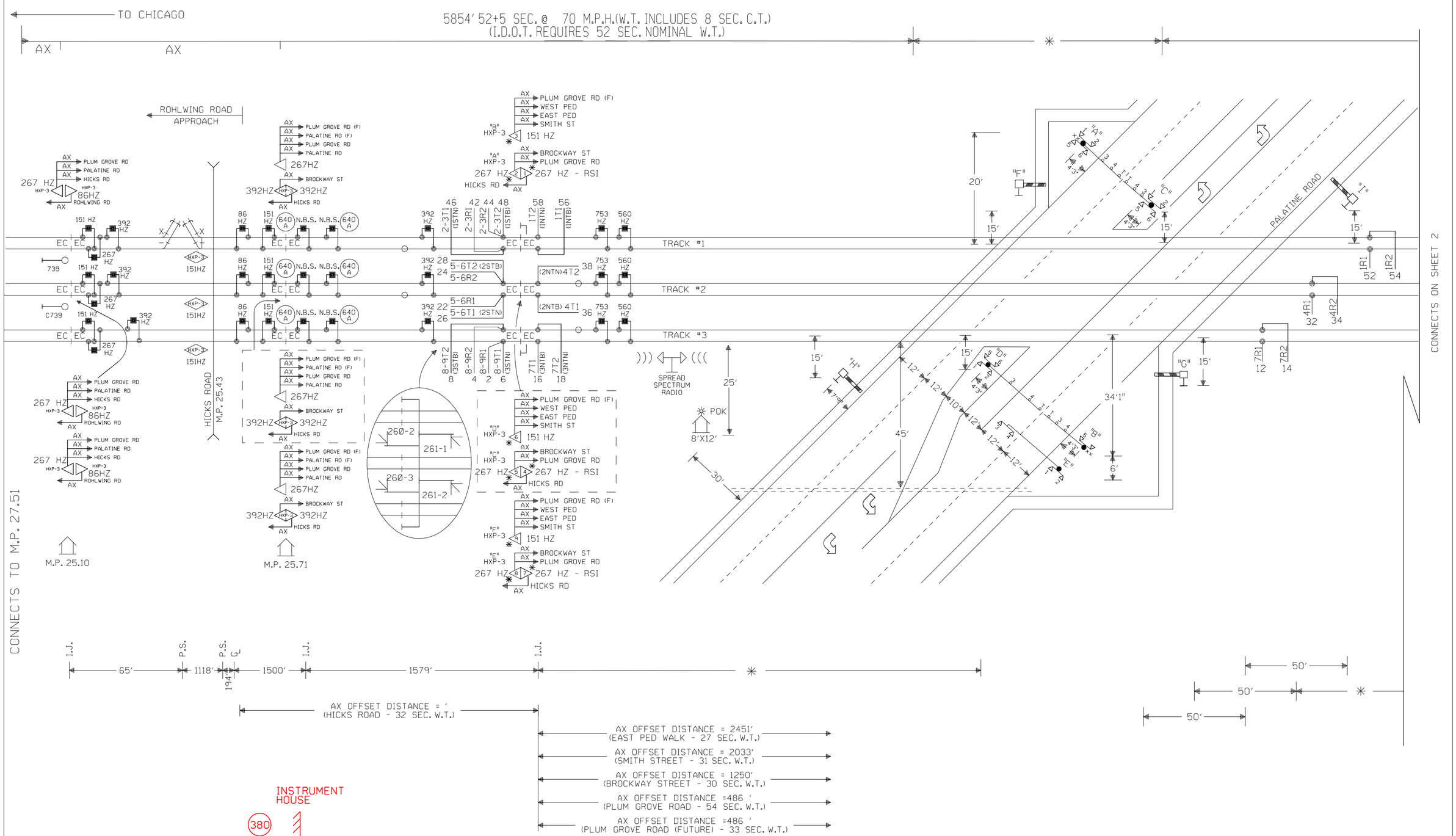

FIELD VERIFY THE OFFSETS, AND "AC" ACCORDINGLY.

CONSTRUCTION NOTE :

1. ✳ = FIELD VERIFY
2. FIELD MOVE TRACK WIRES 50' FROM EDGE OFF THE ROAD.
3. MINIMUM ISLAND 120'

✳ CABLE TABULATION

CABLE NO. U.G.B.T. HOUSE TO TRAFFIC CONTROLLER

NEW SHEET

Designed: 08-06-09
INSTALL CANTILEVER AND MEDIAN GATES FOR ROAD EXPANSION.

Rec#: WO#: 87693
IS: /WSD
/JMM/JJF

MODIFICATION LEVEL	
Q. A. LAST LEVEL CHECKED	DR
LAST LEVEL MOD THIS TYPICAL	DR
LAST LEVEL BY DESIGNER	DS
CHANGED FROM TYPICAL?	Y

REV 02.01.09 4K 2TUCGTYP.1

UNION PACIFIC
QUALITY PRODUCTIVITY SAFETY
SIGNAL DESIGN

Date: 08-06-09
Des: JMM
Chk: WSD
AFE: 87693

UNION PACIFIC RAILROAD
PALATINE, ILLINOIS
PALATINE ROAD
HARVARD SUBDIVISION
Office of Sr AVP Engineering - Signal/TCO Omaha, Nebraska

Sh.: 1
DOT 176937T
MP: 26.04
ID: HAR2604.1X

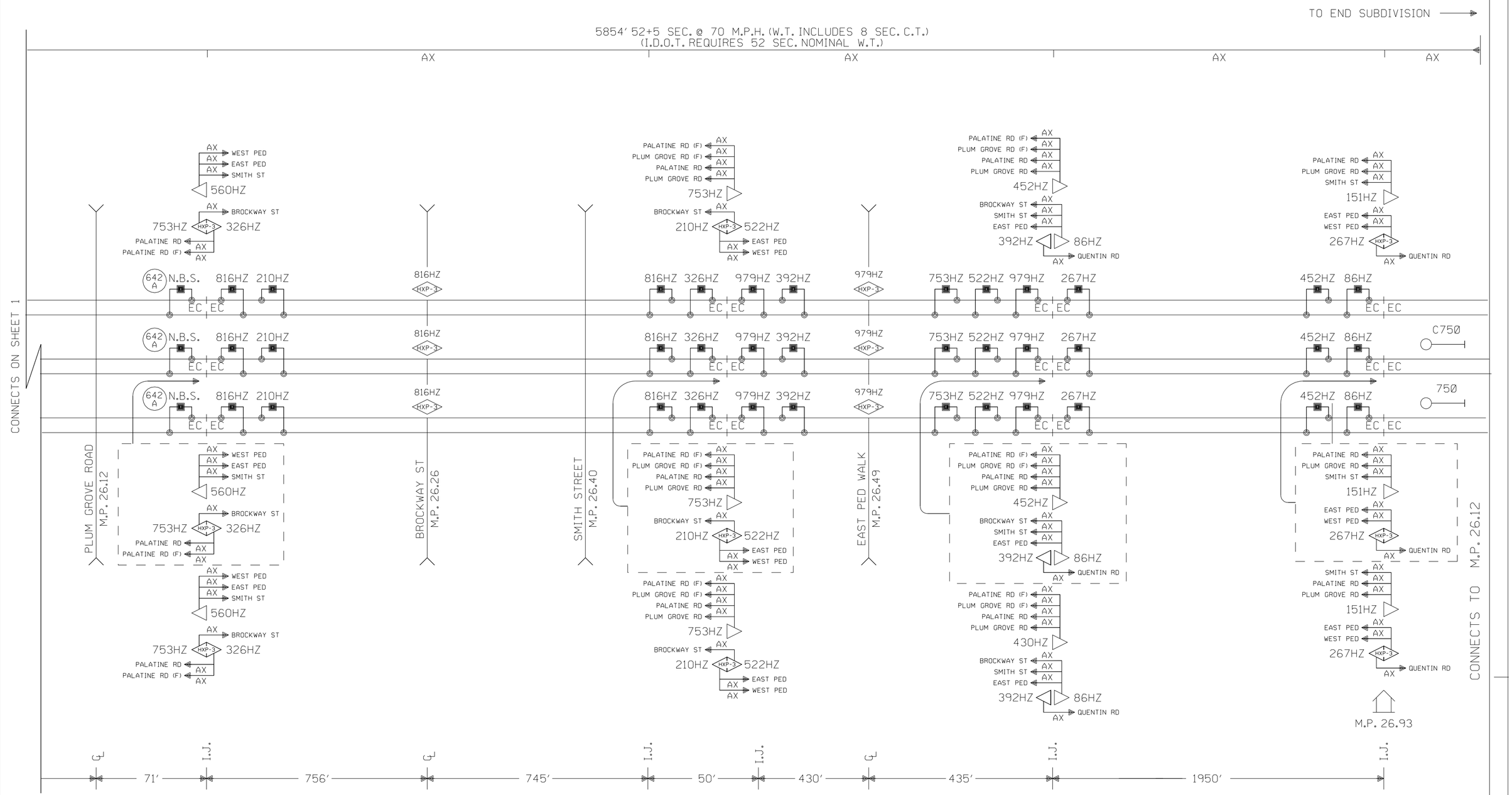

NOTES:

⊗ = TWISTED WIRES
INSULATED 1 TWIST PER FT.
ALL TRACK WIRES 2C. #6

TRANSMITTER AND RECEIVER LEADS TO BE SEPARATED BY AT LEAST 12" IN TRENCH, LENGTHS SHOULD NOT EXCEED MANUFACTURES RECOMMENDATION.

TOP OF FOUNDATION TO BE AT SAME ELEVATION AS THE SURFACE OF THE TRAVELED WAY & NO MORE THAN 4" ABOVE THE SURFACE OF THE GROUND.

ALL BUNGALOW WIRING TO BE #16 AWG FLEX UNLESS OTHERWISE SPECIFIED EXCEPT ALL GROUND WIRE TO BE #6 AWG FLEX OR LARGER.

ALL WIRING IN GATE MECHANISM TO BE #10 "AWG FLEX". REFER TO UP STANDARD DWG FOR BUNGALOW GROUNDING.

PORTABLE GENERATOR EXTENSION CORD FOR 240V TO 240V IS PROVIDED AS WELL AS A 120V TO 240V ADAPTER.

ALL LIGHTS TO BE 12" ROUNDELS.

= = = = = = 4" X 135' CONDUIT

LIGHTS: A,B,C & D LED'S

xx = BELL

GATE A: 16'
GATE B: 24'
GATE C: 16'
GATE D: 24'
CANT E: 22'

* = HXP-3 IS WIRED AS A SEMI-BIDIRECTIONAL UNIT

W(S) ◄——○——► E(N)

NEW SHEET

Designed: 08-06-09
INSTALL CANTILEVER AND MEDIAN GATES FOR ROAD EXPANSION.

Rec#: WO#: 87693
IS: /WSD
/ /JMM/JTB

MODIFICATION LEVEL	
Q.A. LAST LEVEL CHECKED	DR
LAST LEVEL MOD THIS TYPICAL	DR
LAST LEVEL BY DESIGNER	DS
CHANGED FROM TYPICAL?	Y

REV 02.01.09 4K 2TKUGTYP.1

UNION PACIFIC
QUALITY PRODUCTIVITY SAFETY
SIGNAL DESIGN

Date: 08-06-09
Des: JMM
Chk: WSD
AFE: 87693

UNION PACIFIC RAILROAD
PALATINE, ILLINOIS
PALATINE ROAD
HARVARD SUBDIVISION
Office of Sr AVP Engineering - Signal/TCO Omaha, Nebraska

Sh.: 2
DOT 176937T
MP: 26.04
ID: HAR2604.2X

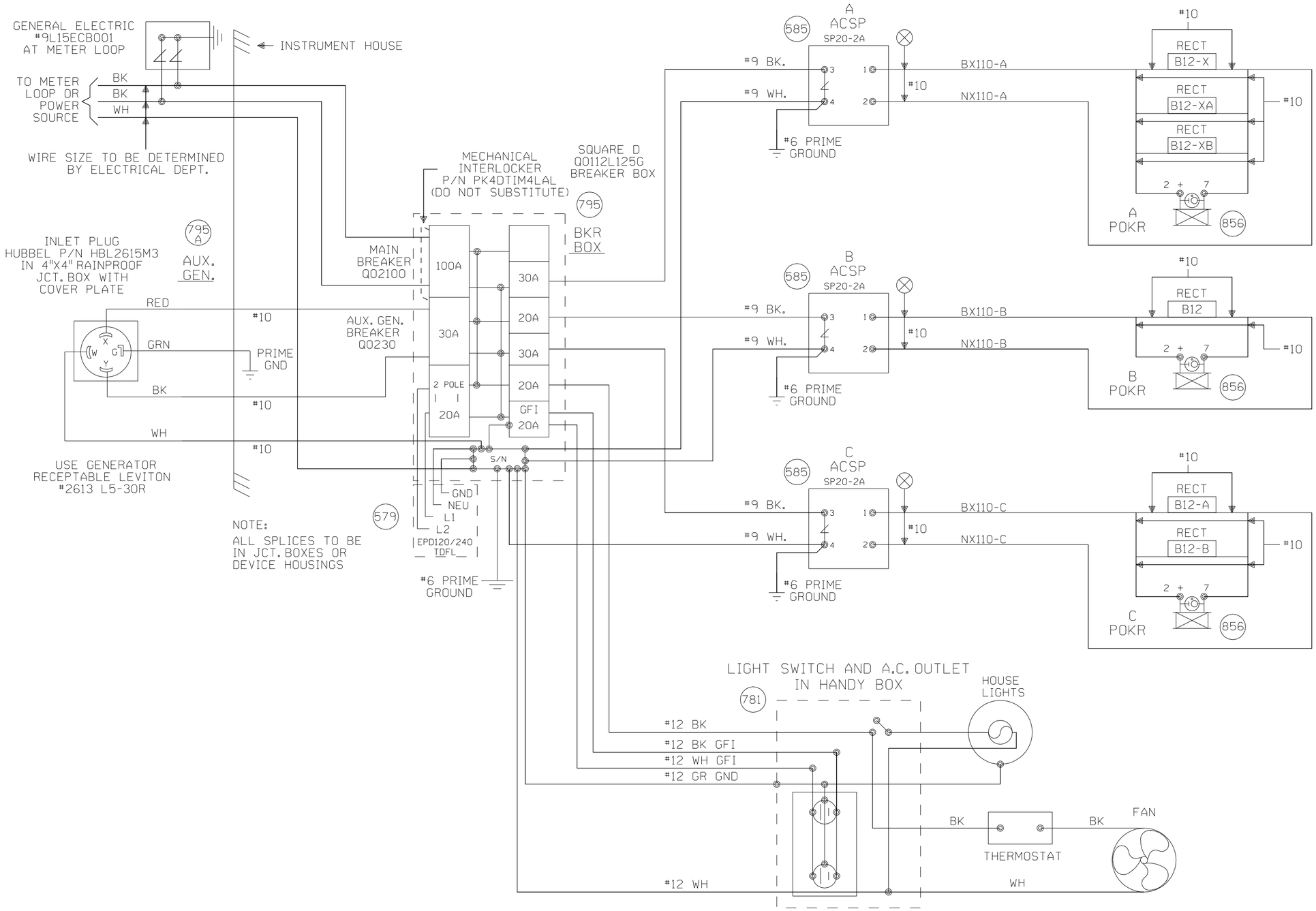

~~X~~ ~~X~~ = OUT

◯ = EXISTING/REVISE IF AC'D

PALATINE, ILLINOIS
PALATINE ROAD
M.P. 26.04
HARVARD SUBDIVISION
D.O.T.#176 938A

D.O.T.#176937T

Designed: 08-06-09
INSTALL CANTILEVER AND MEDIAN GATES FOR ROAD EXPANSION.
Rec#: WO#: 87693
IS: /WSD
/JMM/JTB

REV. 11-15-02
UPGRADED CROSSING CONTROL AS PER THE PALATINE, IL CORRIDOR PROJECT
REC. #11126
5-30-02 JJF
JLK/WITT/WITT/JNM

MODIFICATION LEVEL	
Q.A. LAST LEVEL CHK'D.	CY
LAST LEVEL MOD. THIS TYP.	CZ
LAST LEVEL BY DESIGNER.	CZ
CHANGED FROM TYP.? Y/N	Y

UNION PACIFIC
QUALITY PRODUCTIVITY SAFETY
SIGNAL DESIGN

DES: WITT.IND.
DIG: WITT.IND.
CHK: J.J.F.
A.F.E. 34166
ID= HAR2604.3X

UNION PACIFIC RAILROAD
EVANSVILLE, WISCONSIN TO CHICAGO, ILLINOIS
C.T.C. CIRCUITS
Office of Sr.AVP Engineering - Signal/TCO OMAHA NEBR.

DATE 3-21-00
SHEET 3
DWG 26.04
HAR

(REV. 4-4-00) (HCAGC.2)

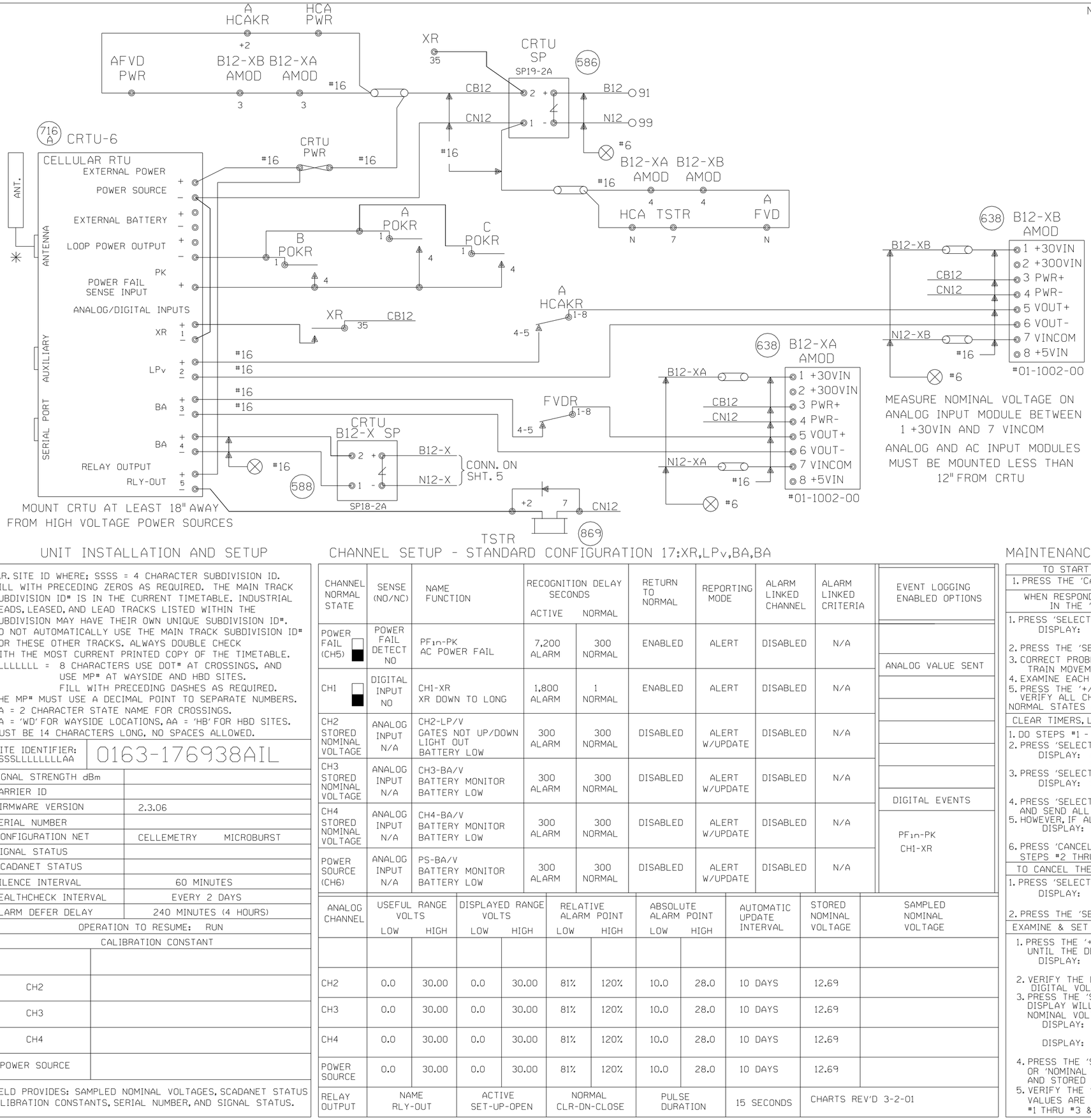

NOTES:
ALL DIODES 1N5060 OR 1N4004 UNLESS OTHERWISE NOTED.
✳ MOUNT ANTENNA ON TOP OF HOUSE.
ALL WIRES #18 UNLESS OTHERWISE NOTED.
ALL UNUSED 'NC' INPUTS MUST BE TIED HIGH TO BATTERY
ALL UNUSED ANALOG INPUTS MUST BE TIED HIGH TO BATTERY
ALL UNUSED 'NO' INPUTS MUST BE DISCONNECTED

CRTU FRONT PANEL DISPLAY CHART INDICATES NORMAL STATE

■ DIGITAL INPUT HIGH, OR POWER FAIL INPUT CLOSED

□ DIGITAL INPUT LOW, OR POWER FAIL INPUT OPEN

NORMAL STATE FOR ANALOG CHANNELS IS EQUAL TO THE STORED NOMINAL VOLTAGE +120% OR -81%

■ L ← LATCH IS SET BECAUSE CRTU DETECTED AN ALARM CONDITION

12.06V L

'sRUN MODE' 'sRUN MODE-SILENT'

CRTU RADIO IS DISABLED. REPROGRAM CRTU WITH LAPTOP.

UNIT INSTALLATION AND SETUP

R.R. SITE ID WHERE; SSSS = 4 CHARACTER SUBDIVISION ID. FILL WITH PRECEDING ZEROS AS REQUIRED. THE MAIN TRACK SUBDIVISION ID# IS IN THE CURRENT TIMETABLE. INDUSTRIAL LEADS, LEASED, AND LEAD TRACKS LISTED WITHIN THE SUBDIVISION MAY HAVE THEIR OWN UNIQUE SUBDIVISION ID#. DO NOT AUTOMATICALLY USE THE MAIN TRACK SUBDIVISION ID# FOR THESE OTHER TRACKS. ALWAYS DOUBLE CHECK WITH THE MOST CURRENT PRINTED COPY OF THE TIMETABLE.
LLLLLLLL = 8 CHARACTERS USE DOT# AT CROSSINGS, AND USE MP# AT WAYSIDE AND HBD SITES. FILL WITH PRECEDING DASHES AS REQUIRED.
THE MP# MUST USE A DECIMAL POINT TO SEPARATE NUMBERS.
AA = 2 CHARACTER STATE NAME FOR CROSSINGS.
AA = 'WD' FOR WAYSIDE LOCATIONS, AA = 'HB' FOR HBD SITES.
MUST BE 14 CHARACTERS LONG, NO SPACES ALLOWED.

SITE IDENTIFIER: SSSSLLLLLLLLAA	0163-176938AIL
SIGNAL STRENGTH dBm	
CARRIER ID	
FIRMWARE VERSION	2.3.06
SERIAL NUMBER	
CONFIGURATION NET	CELLEMETRY MICROBURST
SIGNAL STATUS	
SCADANET STATUS	
SILENCE INTERVAL	60 MINUTES
HEALTHCHECK INTERVAL	EVERY 2 DAYS
ALARM DEFER DELAY	240 MINUTES (4 HOURS)
OPERATION TO RESUME:	RUN
CALIBRATION CONSTANT	
CH2	
CH3	
CH4	
POWER SOURCE	

FIELD PROVIDES: SAMPLED NOMINAL VOLTAGES, SCADANET STATUS CALIBRATION CONSTANTS, SERIAL NUMBER, AND SIGNAL STATUS.

CHANNEL SETUP - STANDARD CONFIGURATION 17:XR,LPv,BA,BA

CHANNEL NORMAL STATE	SENSE (NO/NC)	NAME FUNCTION	RECOGNITION DELAY SECONDS ACTIVE	RECOGNITION DELAY SECONDS NORMAL	RETURN TO NORMAL	REPORTING MODE	ALARM LINKED CHANNEL	ALARM LINKED CRITERIA
POWER FAIL (CH5) ■	POWER FAIL DETECT NO	PF1n-PK AC POWER FAIL	7,200 ALARM	300 NORMAL	ENABLED	ALERT	DISABLED	N/A
CH1 □	DIGITAL INPUT NO	CH1-XR XR DOWN TO LONG	1,800 ALARM	1 NORMAL	ENABLED	ALERT	DISABLED	N/A
CH2 STORED NOMINAL VOLTAGE	ANALOG INPUT N/A	CH2-LP/V GATES NOT UP/DOWN LIGHT OUT BATTERY LOW	300 ALARM	300 NORMAL	DISABLED	ALERT W/UPDATE	DISABLED	N/A
CH3 STORED NOMINAL VOLTAGE	ANALOG INPUT N/A	CH3-BA/V BATTERY MONITOR BATTERY LOW	300 ALARM	300 NORMAL	DISABLED	ALERT W/UPDATE	DISABLED	N/A
CH4 STORED NOMINAL VOLTAGE	ANALOG INPUT N/A	CH4-BA/V BATTERY MONITOR BATTERY LOW	300 ALARM	300 NORMAL	DISABLED	ALERT W/UPDATE	DISABLED	N/A
POWER SOURCE (CH6)	ANALOG INPUT N/A	PS-BA/V BATTERY MONITOR BATTERY LOW	300 ALARM	300 NORMAL	DISABLED	ALERT W/UPDATE	DISABLED	N/A

EVENT LOGGING ENABLED OPTIONS

ANALOG VALUE SENT

DIGITAL EVENTS

PF1n-PK
CH1-XR

ANALOG CHANNEL	USEFUL RANGE VOLTS LOW	USEFUL RANGE VOLTS HIGH	DISPLAYED RANGE VOLTS LOW	DISPLAYED RANGE VOLTS HIGH	RELATIVE ALARM POINT LOW	RELATIVE ALARM POINT HIGH	ABSOLUTE ALARM POINT LOW	ABSOLUTE ALARM POINT HIGH	AUTOMATIC UPDATE INTERVAL	STORED NOMINAL VOLTAGE	SAMPLED NOMINAL VOLTAGE
CH2	0.0	30.00	0.0	30.00	81%	120%	10.0	28.0	10 DAYS	12.69	
CH3	0.0	30.00	0.0	30.00	81%	120%	10.0	28.0	10 DAYS	12.69	
CH4	0.0	30.00	0.0	30.00	81%	120%	10.0	28.0	10 DAYS	12.69	
POWER SOURCE	0.0	30.00	0.0	30.00	81%	120%	10.0	28.0	10 DAYS	12.69	
RELAY OUTPUT	NAME RLY-OUT		ACTIVE SET-UP-OPEN		NORMAL CLR-DN-CLOSE		PULSE DURATION		15 SECONDS	CHARTS REV'D 3-2-01	

MAINTENANCE OPERATIONS

TO START OR ABORT ANY PROCEDURE

1. PRESS THE 'CANCEL' BUTTON FIRST

WHEN RESPONDING TO A CALL, PUT THE CRTU IN THE 'SILENCE ALARMS' MODE

1. PRESS 'SELECT' AND THEN '+ ARROW' BUTTON UNTIL
   DISPLAY: ACTION?
   SILENCE ALARMS
2. PRESS THE 'SELECT' BUTTON TWICE
3. CORRECT PROBLEM AND SIMULATE NORMAL TRAIN MOVEMENT THROUGH THE LOCATION
4. EXAMINE EACH CHANNEL ON THE CRTU
5. PRESS THE '+/- ARROW' BUTTON
   VERIFY ALL CHANNELS INDICATE A NORMAL STATE
   NORMAL STATES ARE ON THE CHANNEL SETUP CHART

CLEAR TIMERS, LATCHES AND SEND ALL NORMAL

1. DO STEPS #1 - #5 ABOVE, AND PRESS 'CANCEL'.
2. PRESS 'SELECT' AND THEN '- ARROW' BUTTON UNTIL
   DISPLAY: ACTION?
   SERVICE MODE
3. PRESS 'SELECT' AGAIN TO RESET TIMERS, AND IF
   DISPLAY: SERVICE MODE
   ALL NORMAL
4. PRESS 'SELECT' AGAIN TO CLEAR LATCHES, AND SEND ALL NORMAL. SKIP STEPS #5-#6.
5. HOWEVER, IF ALARMS ARE NOT CLEARED;
   DISPLAY: SERVICE MODE
   ALARMS PENDING/PRESENT
6. PRESS 'CANCEL', CORRECT PROBLEM AND REPEAT STEPS #2 THRU #5 UNTIL ALL NORMAL SENT.

TO CANCEL THE 'SILENCE ALARMS' MODE

1. PRESS 'SELECT' AND THEN '+ ARROW' BUTTON UNTIL
   DISPLAY: ACTION?
   CANCEL SILENCE
2. PRESS THE 'SELECT' BUTTON AGAIN

EXAMINE & SET BATTERY VOLTAGE NOMINAL VALUE

1. PRESS THE '+ ARROW' OR '- ARROW' BUTTON UNTIL THE DESIRED CHANNEL IS DISPLAYED.
   DISPLAY: PS-BA:
   13.83V NORMAL
2. VERIFY THE DISPLAYED READING WITH A DIGITAL VOLTMETER
3. PRESS THE 'SELECT' BUTTON, AND THE CRTU DISPLAY WILL SWITCH BETWEEN CURRENT/SAVED NOMINAL VOLTAGE VALUES.
   DISPLAY: NOMINAL ON #6? (CURRENT)
   13.83
   DISPLAY: SAVED NOMINAL 6 (STORED)
   12.69
4. PRESS THE 'SELECT' BUTTON AND THE CURRENT OR 'NOMINAL ON' VALUE WILL BE SAMPLED AND STORED AS THE 'SAVED NOMINAL' VALUE
5. VERIFY THE 'NOMINAL ON' AND 'SAVED NOMINAL' VALUES ARE EQUIVALENT. REPEAT STEPS #1 THRU #3 & PRESS THE 'CANCEL' BUTTON.

SETUP FVD-2 REMOVE COVER PLATE

VERIFY FVD-2 DIP SWITCH SETTINGS

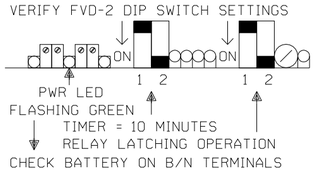

CHECK BATTERY ON B/N TERMINALS
CHECK FUSE, IF NOT FLASHING SEND IN FOR REPAIR & RETURN.

SETUP VOLTAGE ALARM LIMITS

1. MEASURE BATTERY VOLTAGE AT VIN
2. CONNECT DVM POSITIVE LEAD TO RED TEST POINT (+TP).
3. CONNECT DVM NEGATIVE LEAD TO GREEN TEST POINT (COMMON TP).
4. ADJUST THE POT UNTIL IT READS 1/10TH THE ALARM LIMIT VALUE. WHERE 11.5V = 1.15V ON DVM
   SET HIGH = 120% OR 2-3V ABOVE VIN
   SET LOW = 81% OR 1-2V BELOW VIN
5. ADJUST BOTH LOW/HIGH ALARM LIMITS, REPEAT FOR EACH DETECTOR.
6. OPERATE RESET TO RESTORE FVD-2 TO NORMAL, NON-FAILURE STATE.

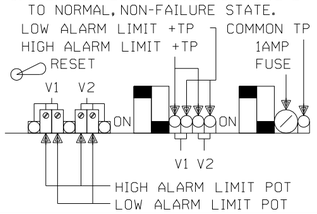

PALATINE, ILLINOIS
PALATINE ROAD
M.P. 26.04
HARVARD SUBDIVISION
D.O.T.#176 938A
D.O.T.#176937T
X X = OUT
◯ = EXISTING/REVISE IF AC'D

Designed: 08-06-09
INSTALL CANTILEVER AND MEDIAN GATES FOR ROAD EXPANSION.
Rec#: WO#:87693
IS: /WSD
/JMM/JTB

REV. 2-17-09
LODS REMOVED AND POK STROBE INSTALLED.
REC. #15576
I.S. 12-4-08
JAM/WITT

REV. 11-15-02
UPGRADED CROSSING CONTROL AS PER THE PALATINE, IL CORRIDOR PROJECT
REC. #11126
5-30-02 RDD
JLK/WITT/WITT/JNM

MODIFICATION LEVEL	
Q.A. LAST LEVEL CHK'D.	CI
LAST LEVEL MOD. THIS TYP.	CK
LAST LEVEL BY DESIGNER.	CZ
CHANGED FROM TYP.? Y/N	Y

UNION PACIFIC
QUALITY PRODUCTIVITY SAFETY
SIGNAL DESIGN

DES: JLK
DIG: WITT
CHK:
A.F.E. 34166
ID= HAR2604.4AX

UNION PACIFIC RAILROAD
EVANSVILLE, WISCONSIN TO CHICAGO, ILLINOIS
C.T.C. CIRCUITS

Office of Sr.AVP Engineering - Signal/TCO OMAHA NEBR.

DATE 3-21-00
SHEET 4A
DWG 26.04
HAR

(REV. 6-1-98)(REMOTE.2)

HCA NOTES:

1. CPU BOARD REV LEVEL "F" OR HIGHER.
2. SOFTWARE REV LEVEL "UP1-NC" OR GREATER ON IC13.
3. DIP SWITCH #1: ON, ON, ON, OFF, ON, ON, OFF, OFF.
4. DIP SWITCH #2: OFF, OFF, OFF, OFF, OFF, OFF, OFF, OFF.
5. JUMPER ALL UNUSED DIGITAL "+" INPUTS TO POSITIVE BATERY.
6. JUMPER ALL UNUSED DIGITAL "-" INPUTS TO NEGATIVE BATTERY.
7. DO NOT JUMPER INPUTS WITH DIFFERENT VOLTAGE REFERENCES TOGETHER.
8. ALL DIODES 1N5060 OR 1N4004 UNLESS OTHERWISE NOTED.

5DTIV2

ANALOG #1:
ANALOG #2:
ANALOG #3:
ANALOG #4:

DIGITAL #1: ISLAND - 1
DIGITAL #2: ISLAND - 2
DIGITAL #3: ISLAND - 3
DIGITAL #4: ISLAND - 4
DIGITAL #5: ISLAND - 5
DIGITAL #6: XR
DIGITAL #7: GATE DOWN A
DIGITAL #8: GATE DOWN B
DIGITAL #9: GP
DIGITAL #10: ISLAND ONLY
DIGITAL #11: FOREIGN XR
DIGITAL #12: TEST
DIGITAL #13: TROUBLE
DIGITAL #14: POR

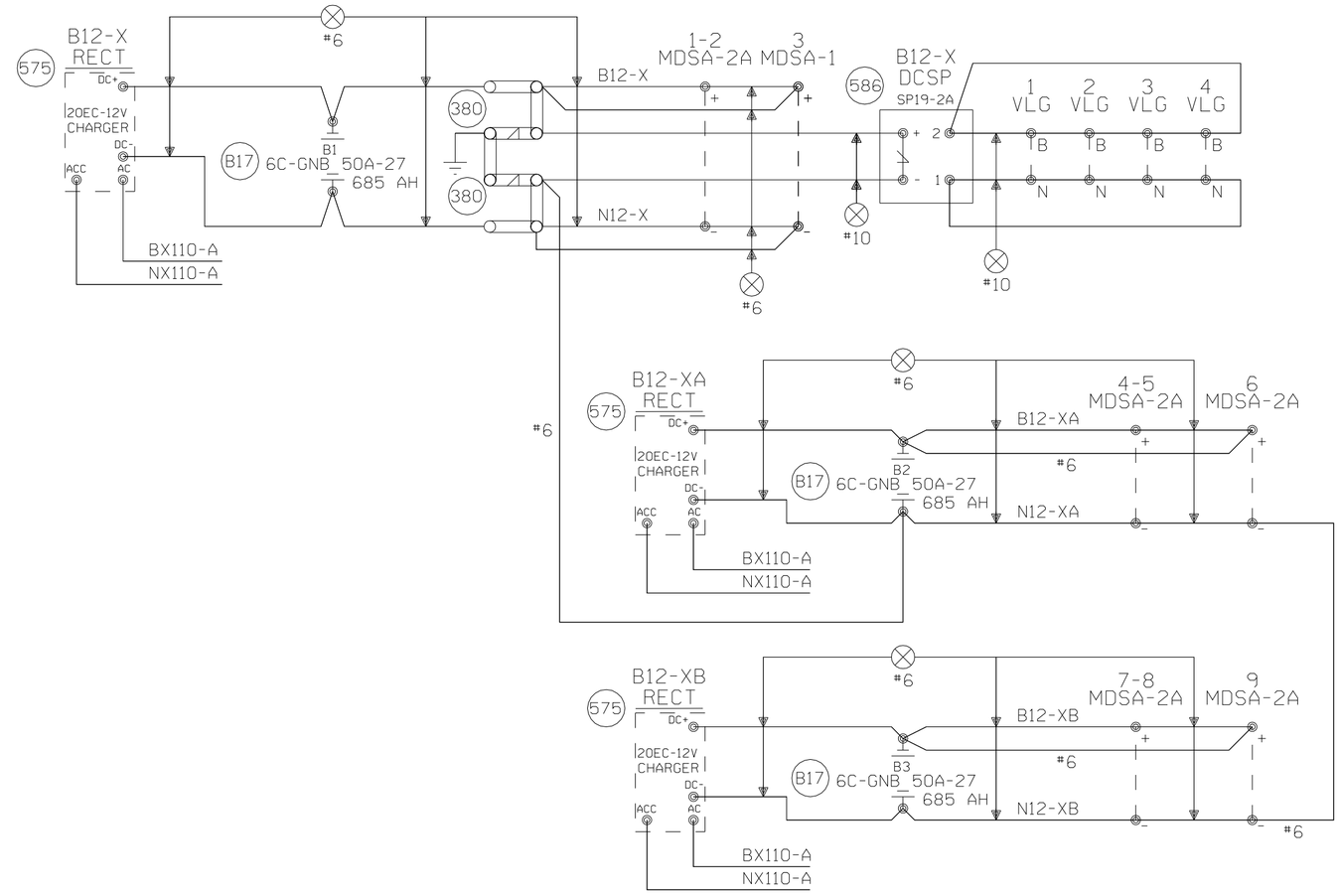

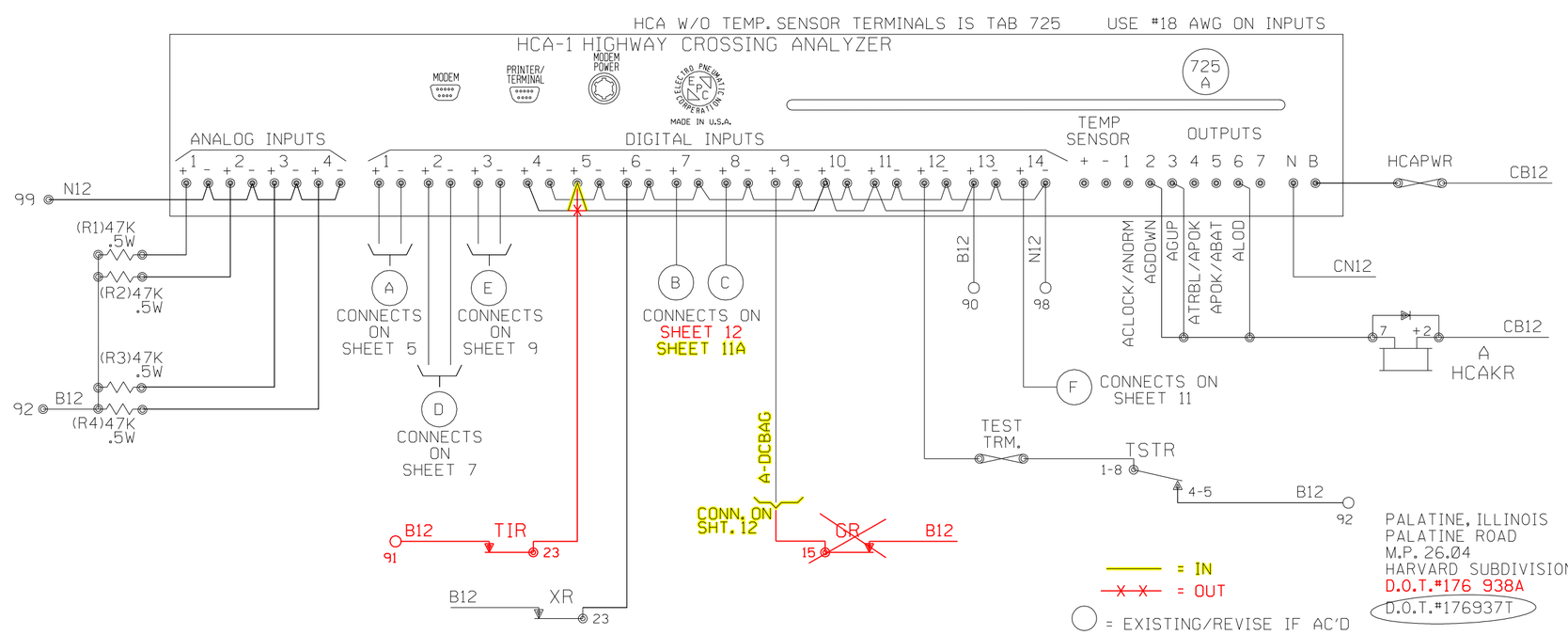

			Designed: 08-06-09 INSTALL CANTILEVER AND MEDIAN GATES FOR ROAD EXPANSION. Rec#: WO#:87693 IS: /WSD / /JMM/JTB	REV. 2-17-09 LODS REMOVED AND POK STROBE INSTALLED. REC. #15606 I.S. 12-5-08 JAM/WITT	REV. 11-15-02 UPGRADED CROSSING CONTROL AS PER THE PALATINE, IL CORRIDOR PROJECT REC. #11126 5-30-02 JJF JLK/WITT/WITT/JNM	MODIFICATION LEVEL Q.A. LAST LEVEL CHK'D. CY LAST LEVEL MOD. THIS TYP. CZ LAST LEVEL BY DESIGNER. CZ CHANGED FROM TYP.? Y/N Y	UNION PACIFIC SIGNAL DESIGN	DES: WITT.IND. DIG: WITT.IND. CHK: J.J.F. A.F.E. 34166 ID= HAR2604.4X	UNION PACIFIC RAILROAD EVANSVILLE, WISCONSIN TO CHICAGO, ILLINOIS C.T.C. CIRCUITS Office of Sr.AVP Engineering - Signal/TCO OMAHA NEBR.	DATE 3-21-00 SHEET 4 DWG 26.04 HAR

(REV. 4-4-00) (HCAGC.2)

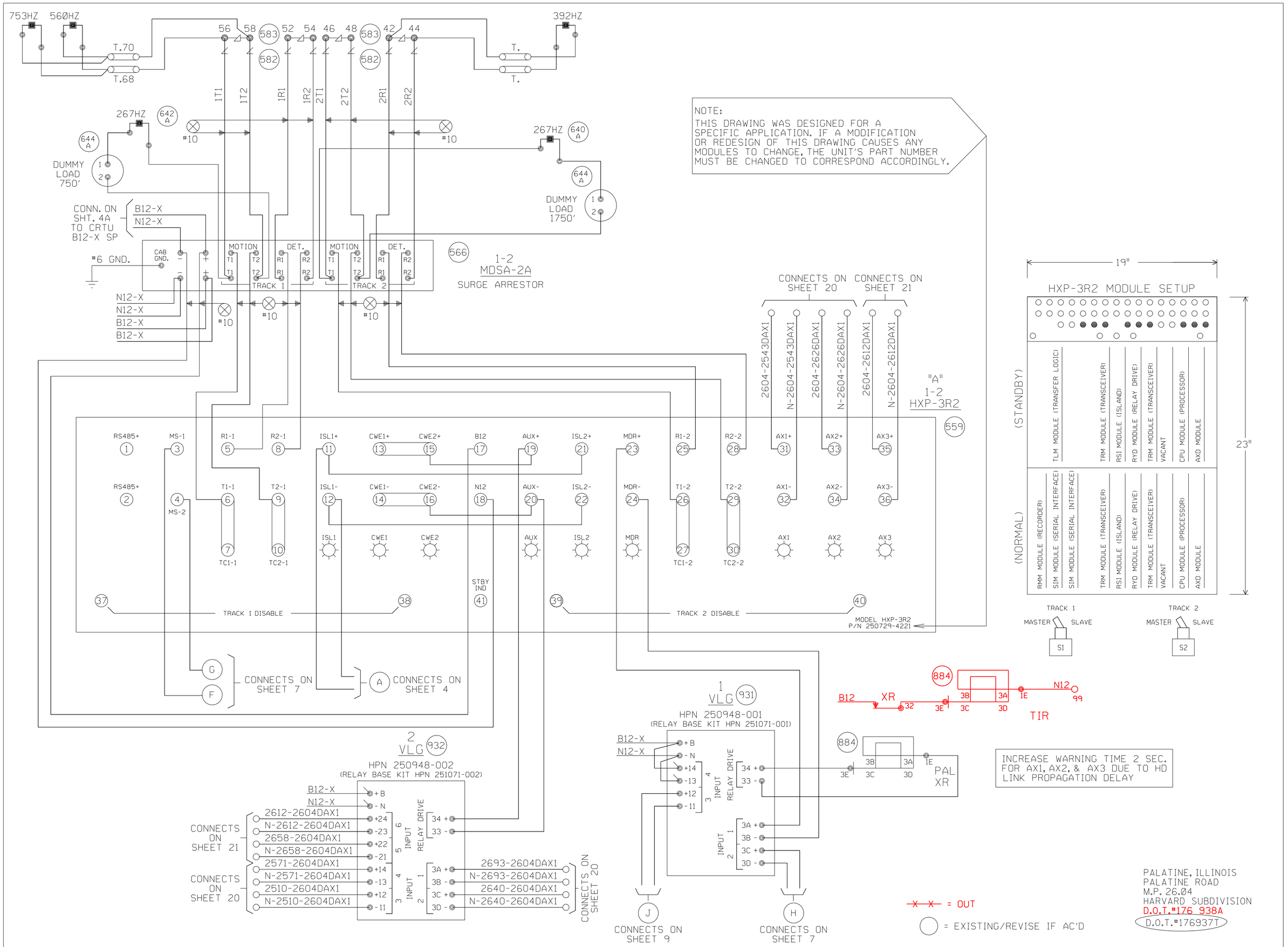

Designed: 08-06-09
INSTALL CANTILEVER AND MEDIAN GATES FOR ROAD EXPANSION.

Rec#: WO#: 87693
IS: /WSD
/JMM/JTB

REV. 11-15-02
UPGRADED CROSSING CONTROL AS PER THE PALATINE, IL CORRIDOR PROJECT
REC. #11126
5-30-02 JJF
JLK/WITT/WITT/JNM

MODIFICATION LEVEL	
Q.A. LAST LEVEL CHK'D.	CI
LAST LEVEL MOD. THIS TYP.	CK
LAST LEVEL BY DESIGNER.	CZ
CHANGED FROM TYP.? Y/N	Y

UNION PACIFIC
QUALITY PRODUCTIVITY SAFETY
SIGNAL DESIGN

DES: WITT.IND.
DIG: WITT.IND.
CHK: J.J.F.
A.F.E. 34166
ID= HAR2604.5X

UNION PACIFIC RAILROAD
EVANSVILLE, WISCONSIN TO CHICAGO, ILLINOIS
C.T.C. CIRCUITS
Office of Sr.AVP Engineering - Signal/TCO OMAHA NEBR.

DATE 3-21-00
SHEET 5
DWG 26.04
HAR

(REV. 6-1-98)(HX32TKUG.3)

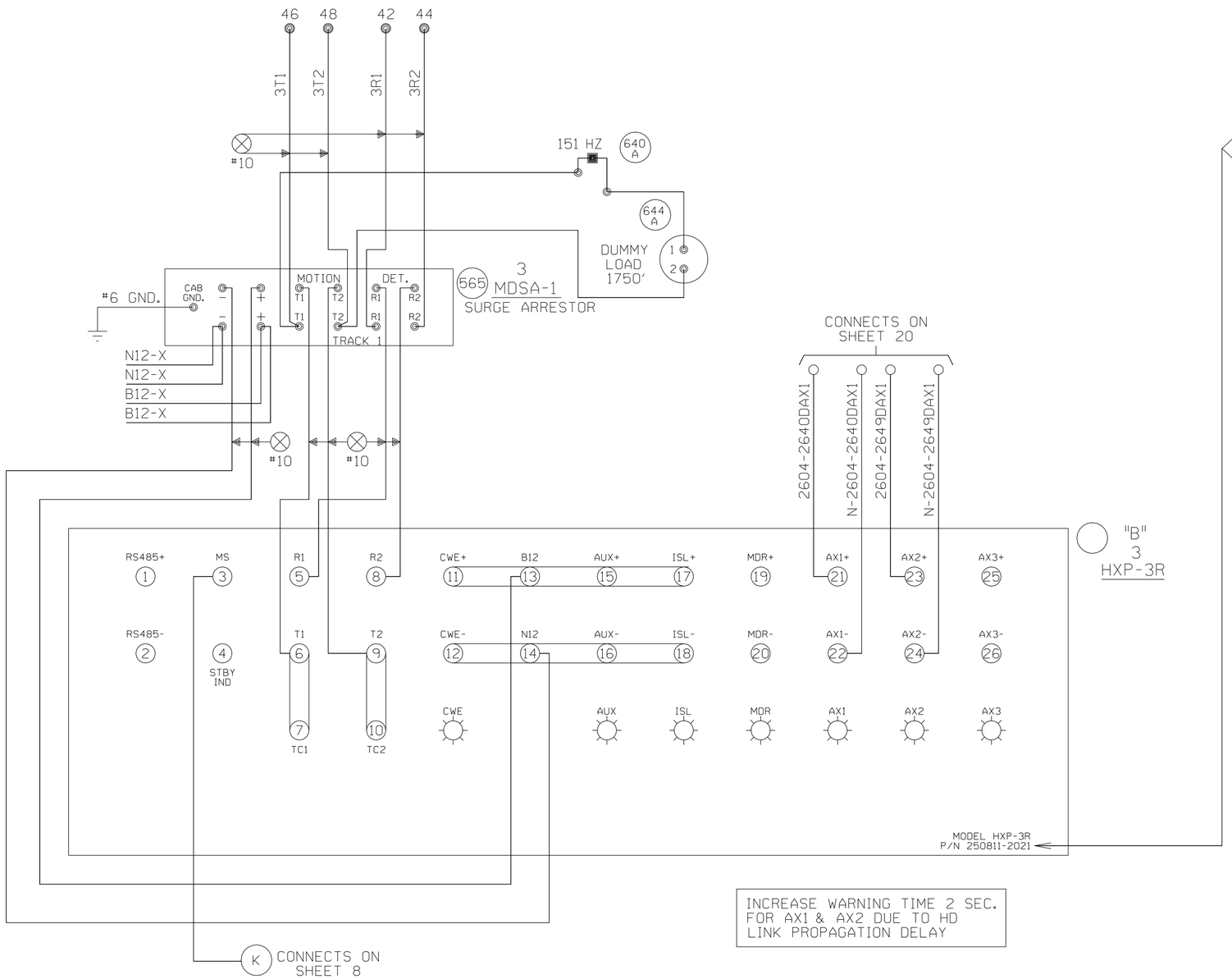

NOTE:
THIS DRAWING WAS DESIGNED FOR A SPECIFIC APPLICATION. IF A MODIFICATION OR REDESIGN OF THIS DRAWING CAUSES ANY MODULES TO CHANGE, THE UNIT'S PART NUMBER MUST BE CHANGED TO CORRESPOND ACCORDINGLY.

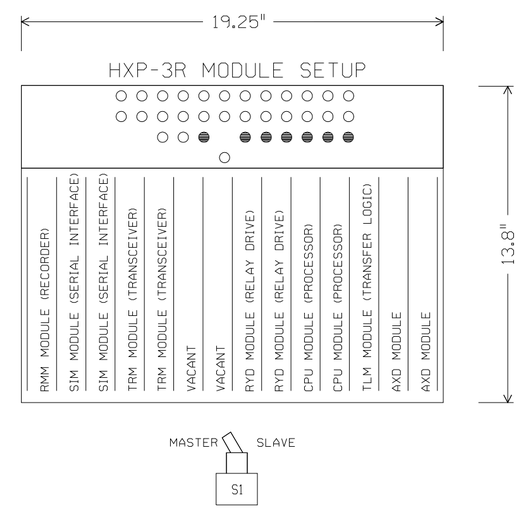

INCREASE WARNING TIME 2 SEC. FOR AX1 & AX2 DUE TO HD LINK PROPAGATION DELAY

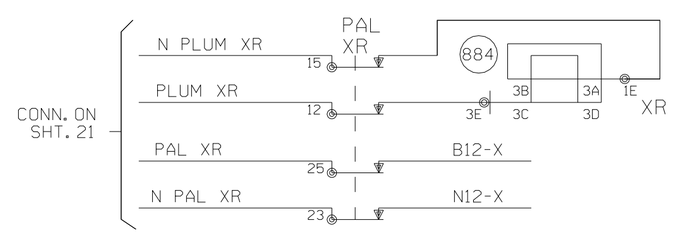

HOLD DOWN FOR PALATINE RD. AND PLUM GROVE RD. FOR TIR

= IN
= OUT
= EXISTING/REVISE IF AC'D

PALATINE, ILLINOIS
PALATINE ROAD
M.P. 26.04
HARVARD SUBDIVISION
D.O.T.#176 938A
D.O.T.#176937T

Designed: 08-06-09
INSTALL CANTILEVER AND MEDIAN GATES FOR ROAD EXPANSION.
Rec#:
IS:
WO#: 87693
/WSD
/JMM/JTB

REV. 11-15-02
UPGRADED CROSSING CONTROL AS PER THE PALATINE, IL CORRIDOR PROJECT
REC. #11126
5-30-02 JJF
JLK/WITT/WITT/JNM

MODIFICATION LEVEL	
Q.A. LAST LEVEL CHK'D.	CY
LAST LEVEL MOD. THIS TYP.	CK
LAST LEVEL BY DESIGNER.	CZ
CHANGED FROM TYP.? Y/N	Y

UNION PACIFIC
QUALITY PRODUCTIVITY SAFETY
SIGNAL DESIGN

DES: WITT.IND.
DIG: WITT.IND.
CHK: J.J.F.
A.F.E. 34166
ID= HAR2604.6X

UNION PACIFIC RAILROAD
EVANSVILLE, WISCONSIN
TO CHICAGO, ILLINOIS
C.T.C. CIRCUITS
Office of Sr.AVP Engineering - Signal/TCO OMAHA NEBR.

DATE 3-21-00
SHEET 6
DWG 26.04
HAR

(REV. 4-4-00) (HX31TKBG.DGN)

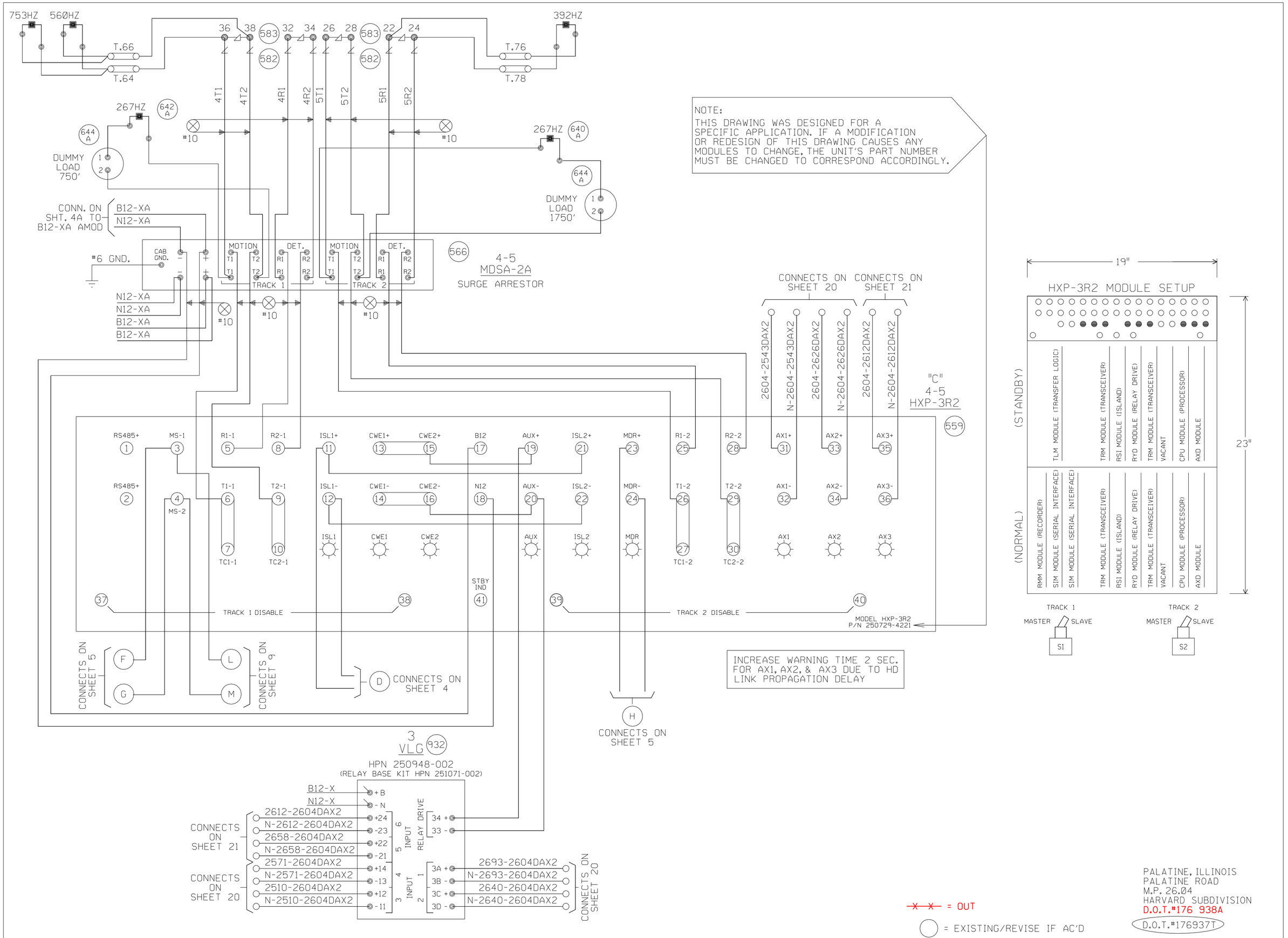

~~X X~~ = OUT

◯ = EXISTING/REVISE IF AC'D

PALATINE, ILLINOIS
PALATINE ROAD
M.P. 26.04
HARVARD SUBDIVISION
D.O.T.#176 938A

D.O.T.#176937T

Designed: 08-06-09
INSTALL CANTILEVER AND MEDIAN GATES FOR ROAD EXPANSION.

Rec#: WO#: 87693
IS: /WSD
/JMM/JTB

REV. 11-15-02
UPGRADED CROSSING CONTROL AS PER THE PALATINE, IL CORRIDOR PROJECT
REC. #11126
5-30-02 JJF
JLK/WITT/WITT/JNM

MODIFICATION LEVEL	
Q.A. LAST LEVEL CHK'D.	CI
LAST LEVEL MOD. THIS TYP.	CK
LAST LEVEL BY DESIGNER.	CZ
CHANGED FROM TYP.? Y/N	Y

UNION PACIFIC
QUALITY PRODUCTIVITY SAFETY
SIGNAL DESIGN

DES: WITT.IND.
DIG: WITT.IND.
CHK: J.J.F.
A.F.E. 34166
ID= HAR2604.7X

UNION PACIFIC RAILROAD
EVANSVILLE, WISCONSIN TO CHICAGO, ILLINOIS
C.T.C. CIRCUITS
Office of Sr.AVP Engineering - Signal/TCO OMAHA NEBR.

DATE 3-21-00
SHEET 7
DWG 26.04
HAR

(REV. 6-1-98)(HX32TKUG.3)