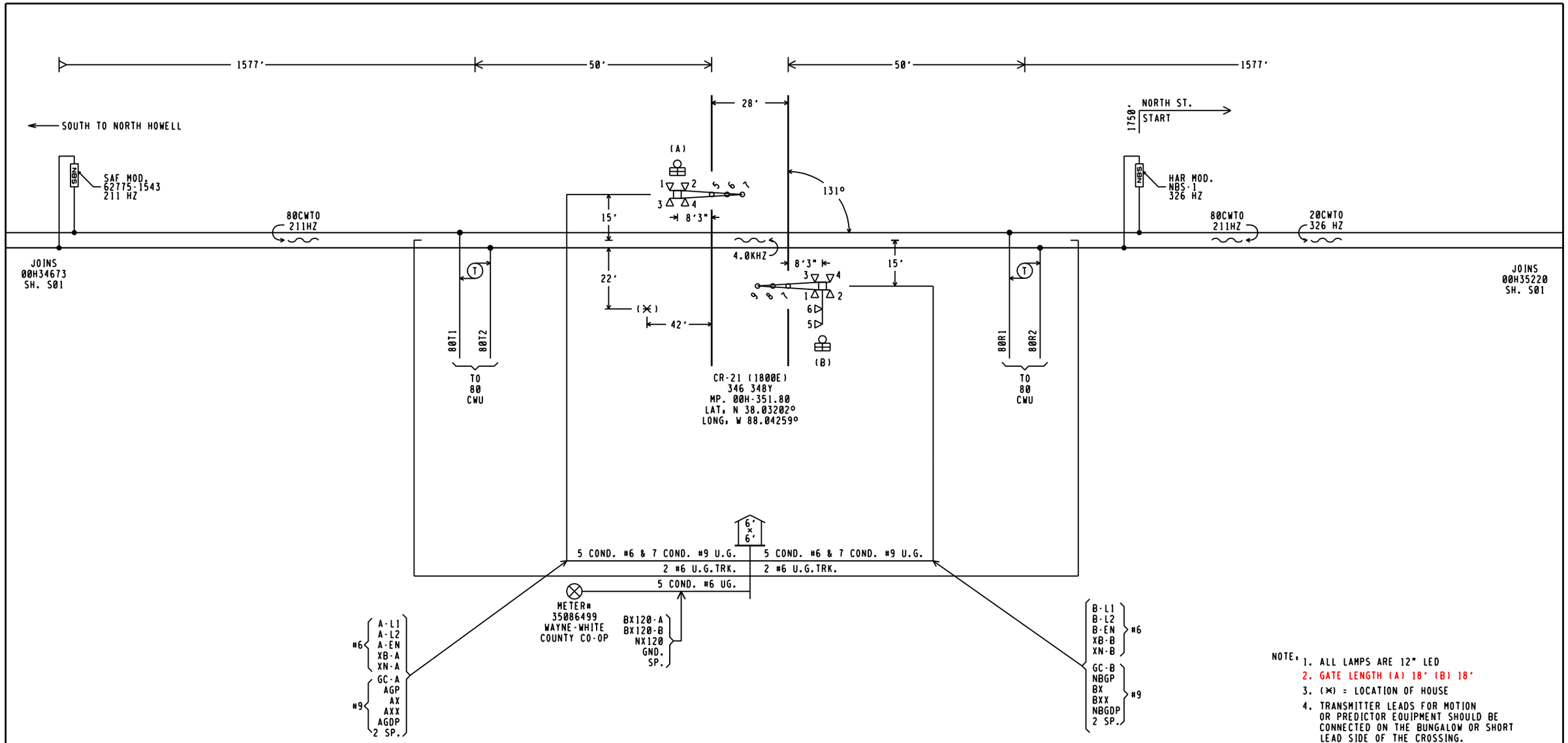

NOTE:
1. ALL LAMPS ARE 12" LED
2. GATE LENGTH (A) 18' (B) 18'
3. (X) = LOCATION OF HOUSE
4. TRANSMITTER LEADS FOR MOTION OR PREDICTOR EQUIPMENT SHOULD BE CONNECTED ON THE BUNGALOW OR SHORT LEAD SIDE OF THE CROSSING.
5. WARNING SYSTEM APPROACH CIRCUIT DISTANCES ARE TO BE MEASURED FROM THE ISLAND TRACK CONNECTIONS.
6. SETBACK DISTANCES ARE MEASURED FROM EDGE OF TRAVELED WAY
7. MAX. TRAIN SPEED 25 M.P.H.

CALL BEFORE YOU DIG, 1-800-892-0123

EVANSVILLE WESTERN

EVANSVILLE WESTERN RAILWAY
1500 KENTUCKY AVE. PADUCAH, KY 42003

REVISIONS
02-23-09 IRS 731
02-22-10 IRS

MAUNIE, IL

TRACK AND SIGNAL PLAN AT
CR-21 (1800E) 346 348Y MP. 00H-351.80

DESIGNED	DIGITIZED	CHECKED	DATE
IRS/JFK	IRS/ABK	IRS/MDH	01-14-08
NEXT FILE	NEXT SH	FILE	SHEET
00H35180	E01	00H35180	S01

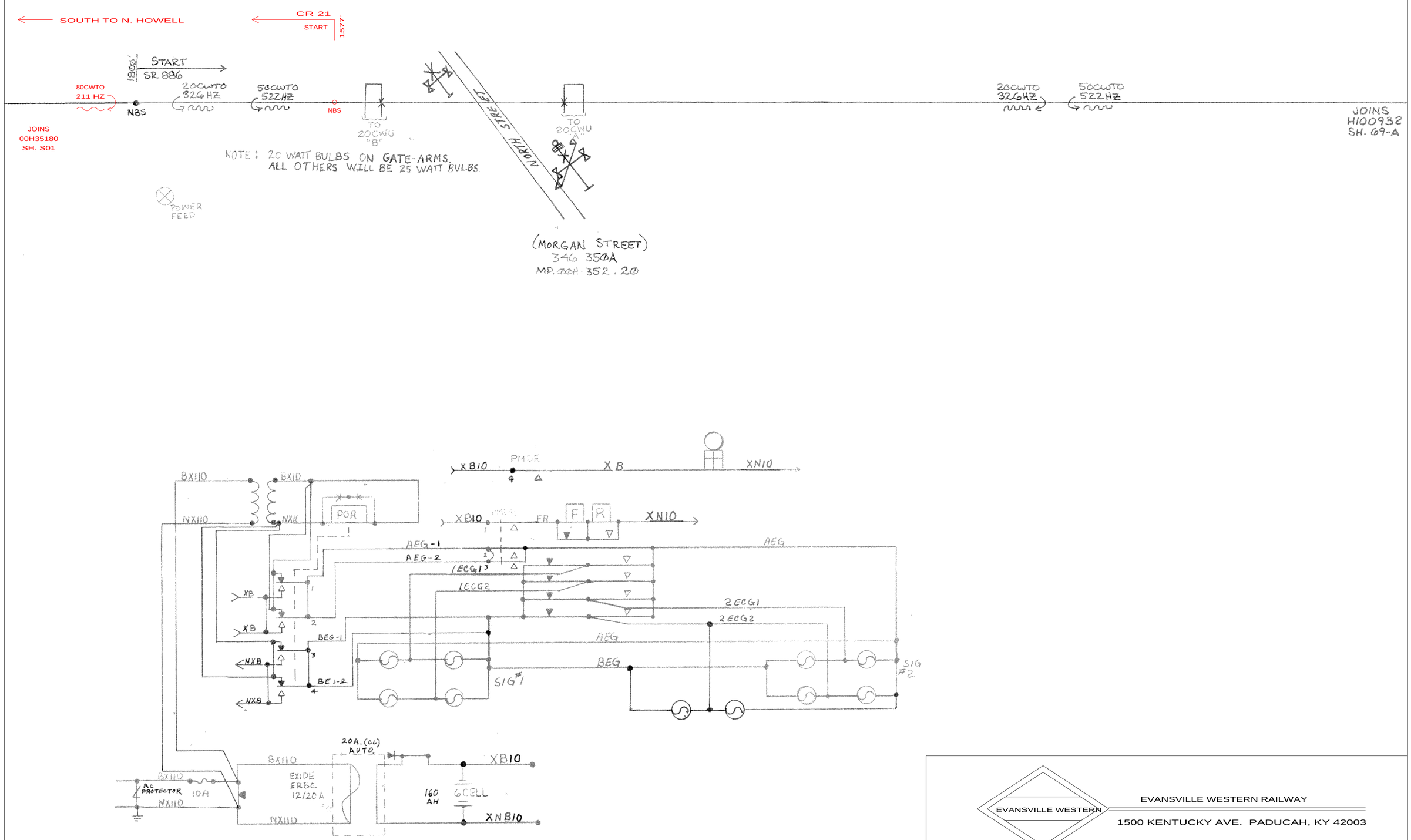

EVANSVILLE WESTERN

EVANSVILLE WESTERN RAILWAY

1500 KENTUCKY AVE. PADUCAH, KY 42003

REVISIONS
04-11-94 SAF
11-06-97 URS/SLS IL1997057
07-15-03 IRS IL2003026
CREATED VECTOR 02-23-09 IRS 731

MAUNIE, IL

TRACK AND SIGNAL PLAN AT

NORTH ST. (MORGAN ST.) 346 350A MP. 00H-352.20

DESIGNED	DIGITIZED	CHECKED	DATE
IRS/JFK	IRS/ABK	IRS/MDH	02-23-09

NEXT FILE	NEXT SH	FILE	SHEET
00H35220	C01	00H35220	S01

RASTER FILE: 00H35220S01.CIT MS FILE:00H35220.S01

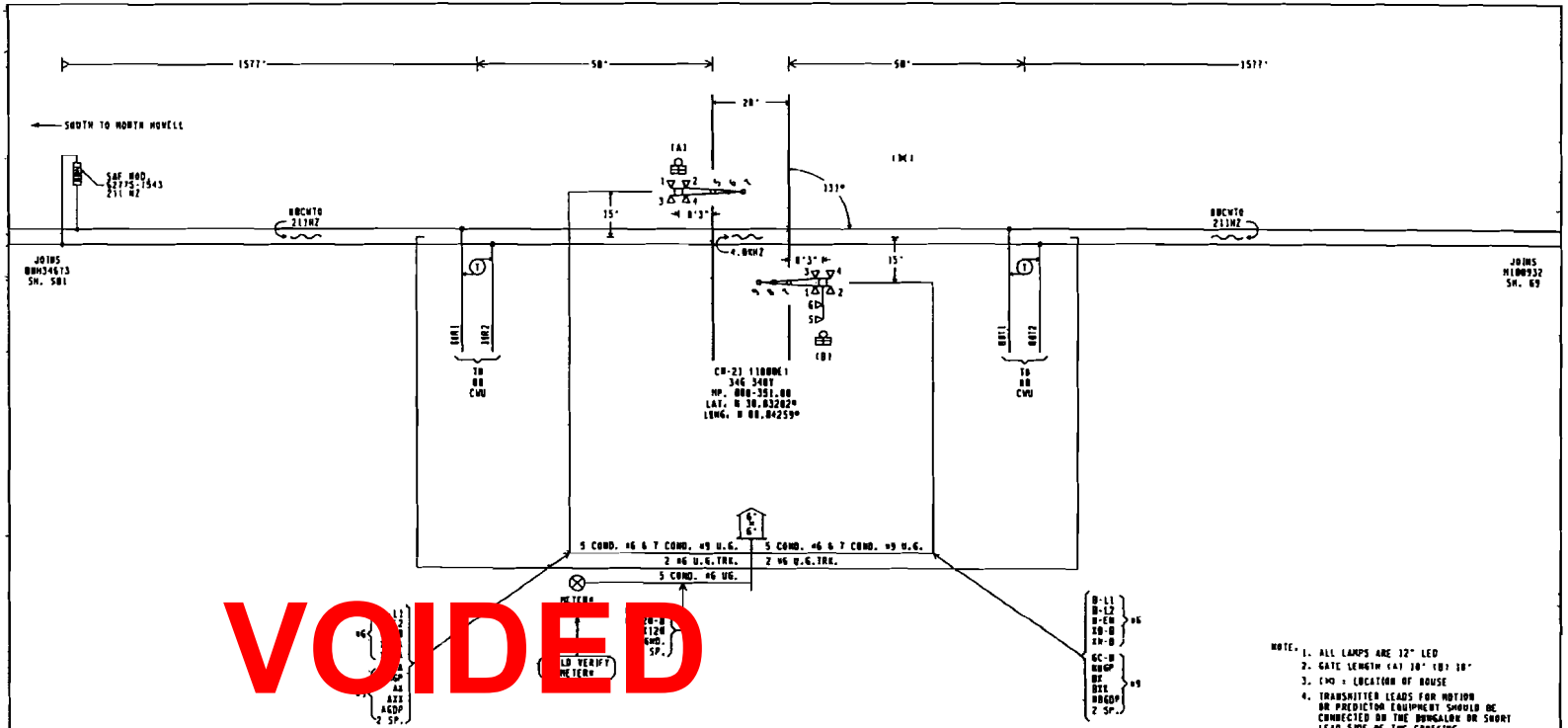

VOIDED
REVISED 2/22/2010

CALL BEFORE YOU DIG, 1-800-892-0123

EVANSVILLE WESTERN RAILWAY
1500 KENTUCKY AVE. PADUCAH, KY 42003

REVISIONS

NEW WORK
DATE. 01-14-08
IRS PROJECT # T31
IRS/JFK/MDH

PRELIMINARY
NOT FOR CONSTRUCTION

MAUKIE, IL

TRACK AND SIGNAL PLAN AT
CR-21 (180ME) 346 3481 MP. 000-351.00

DESIGNED	DIGITIZED	CHECKED	DATE
IRS/JFK	IRS/ABL	IRS/MDH	01-14-08
NEXT FILE	NEXT SH	FILE	SHEET
00H351A0	E01	00H351A0	S01

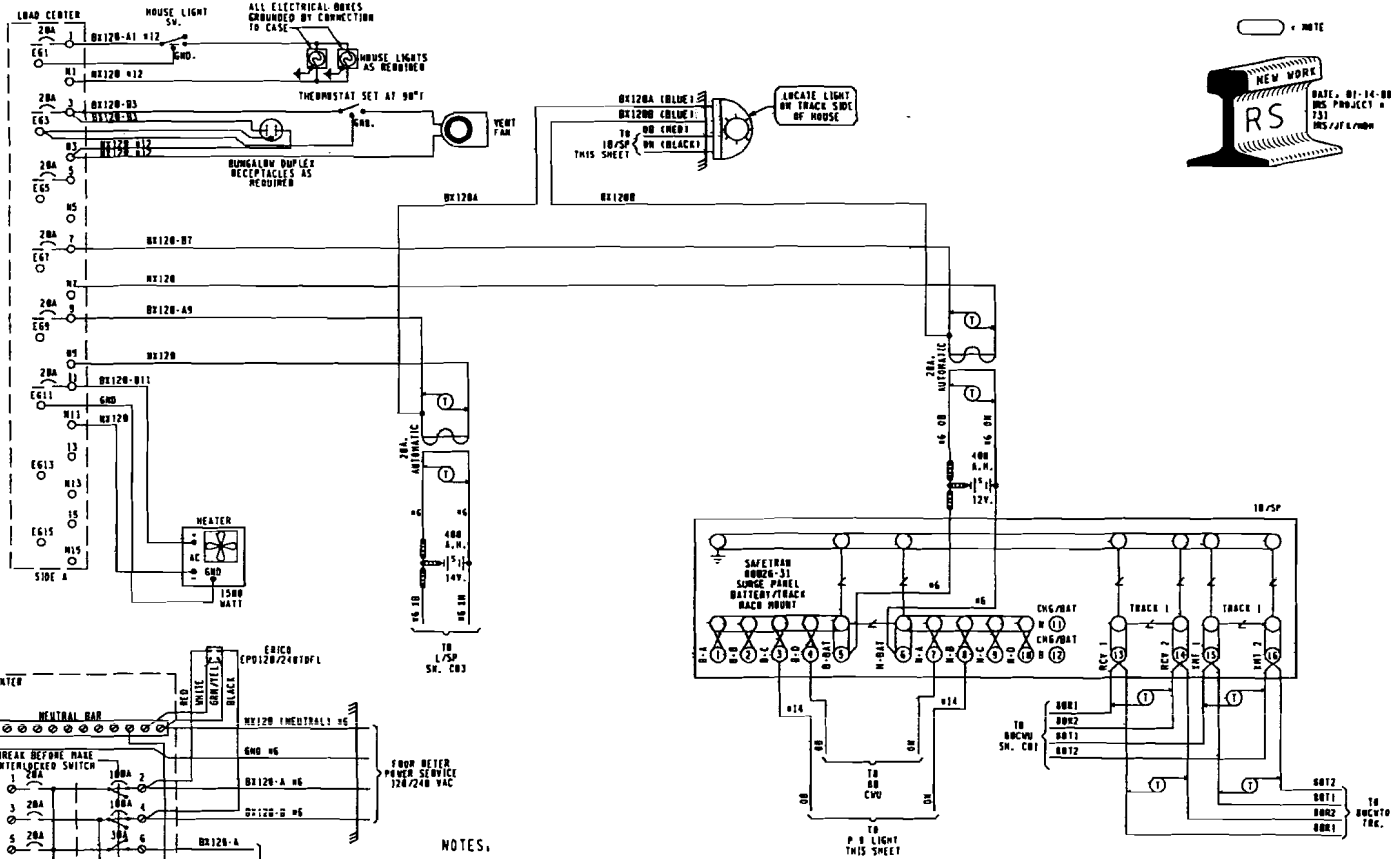

EQUIPMENT		
REF.	NOMENCLATURE	TYPE
	80CVU	ROTION SENSOR, GRADE CROSSING UNIT SAFETRAN MODEL 3000002. SAFETRAN P/N 80160-111-1P1
	80DR1A	DATA RECORDER INTERFACE ASSEMBLY SAFETRAN P/N 80025
	SSCC111-28	CROSSING CONTROLLER, SOLID STATE, SAFETRAN 28 AMP P/N 51165
	L/SP	LIGHTING/SURGE PANEL SAFETRAN P/N 51170-1
	18/SP	BATTERY SURGE PANEL SAFETRAN P/N 80026-31

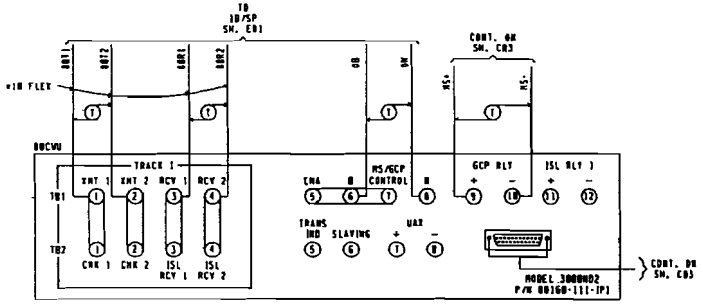

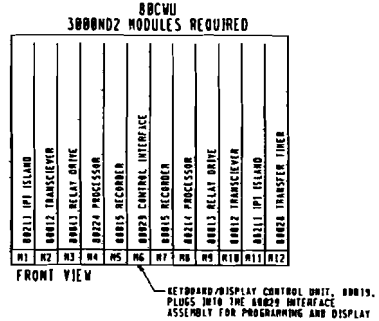

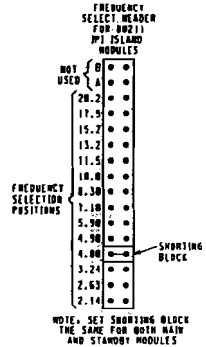

MODULE 00028
S4 DIP SWITCH POSITIONS *

SWITCH #	16	8	4	2	1
SWITCH POSITION	UP	DOWN	UP	DOWN	UP

* MAY BE SET PER FIELD CONDITIONS

MODULE 00020
S3 DIP SWITCH POSITIONS

SWITCH #	A	B	C	D
DAX USED	RIGHT	RIGHT	RIGHT	RIGHT

LEFT INDICATES DAX USED

SWITCH TO REMAIN IN
THE RIGHT POSITION
AT ALL TIMES

EVANSVILLE WESTERN RAILWAY
1500 KENTUCKY AVE. PADUCAH, KY 42003

REVISIONS

PRELIMINARY
NOT FOR CONSTRUCTION

MAUNIE, IL

CIRCUITS AT
CR-21 (100NE) 346 340Y MP. 00H-351.00

DESIGNED	DIGITIZED	CHECKED	DATE
IRS/JFK	IRS/ABK	IRS/MDW	01-14-00
NEXT FILE	NEXT SH	FILE	SHEET
00H35100	C02	00H35100	C01

3000 GCP APPLICATION DESIGN CARD

EQUIPMENT: 3000 [ ] 3000WD [ ] 3000D2 [ ] 3000WD2 [■]

ISLAND FREQUENCY: T1: 4.9 KHZ T2: ___ KHZ 50 CYU

SOFTWARE LEVEL (DISPLAYED DURING BOOT-UP)		☆☆	
NUMBER OF TRACKS (NUMBER OF TRANSCEIVER MODULES, 1 OR 2)		1 [■]	2 [ ]
FREQUENCY (MS/GCP)	T1:	211	HZ
	T2:		HZ
UNIDIRECTIONAL / BIDIRECTIONAL	T1:	UNI [ ]	BI [■]
	T2:	UNI [ ]	BI [ ]
UNIT LEVEL	T1:	HI [ ]	NED [■]
	T2:	HI [ ]	NED [ ]
PREDICTOR/MOTION SENSOR	T1:	PRED [■]	MS [ ]
	T2:	PRED [ ]	MS [ ]
WARNING TIME SELECTED	T1:	30	SEC.
	T2:		SEC.
APPROACH DISTANCE SELECTED	T1:	1577	FT.
	T2:		FT.
APPROACH DISTANCE COMPUTED	T1:	NOT REQUIRED *	
	T2:	NOT REQUIRED *	
MAX PICKUP DELAY (DAX1) (0 = OFF)		0	SEC.
EMA/DAX2 DELAY (0 = EMA)			SEC.
ISLAND DISTANCE (BETWEEN FEED WIRES)	T1:	132 ☆	FT.
	T2:		FT.
NUMBER OF DAX'S		0 [■] 1 [ ] 2 [ ] 3 [ ] 4 [ ]	
DAX A TRACK ASSIGNMENT		T1 [ ]	T2 [ ]
DAX A DISTANCE (0 = PREEMPT)			FT.
DAX A WARNING TIME			SEC.
DAX B TRACK ASSIGNMENT		T1 [ ]	T2 [ ]
DAX B DISTANCE (0 = PREEMPT)			FT.
DAX B WARNING TIME			SEC.
DAX C TRACK ASSIGNMENT		T1 [ ]	T2 [ ]
DAX C DISTANCE (0 = PREEMPT)			FT.
DAX C WARNING TIME			SEC.
DAX D TRACK ASSIGNMENT		T1 [ ]	T2 [ ]
DAX D DISTANCE (0 = PREEMPT)			FT.
DAX D WARNING TIME			SEC.
SLAVING MASTER/SLAVE		MASTER [■]	SLAVE [ ]
PASSWORD ENABLED		DISABLED [■]	ENABLED [ ]
RECORDER INSTALLED		NOT INSTALLED	INSTALLED [■]
RS-232-C BAUD RATE		300	BPS
RS-232-C DATA BITS		7 [■]	8 [ ]
RS-232-C STOP BITS		1 [ ]	2 [■]
RS-232-C PARITY		NONE [■]	MARK [ ]
		ODD [ ] EVEN [ ]	SPACE [ ]
DATE (E.G., MON 13 MAY 1997)		NOT REQUIRED *	
TIME (E.G., 06:25:43 PM)		NOT REQUIRED *	
DAYLIGHT SAVINGS		ON [■]	OFF [ ]

EXPANDED PROGRAMMING DESIGN

SWITCH TO MS (ENTER EZ VALUE)	T1:	10%	EZ
	T2:		EZ
TRANSFER DELAY MS TO GCP (0 = OFF)	T1:	0	SEC.
	T2:		SEC.
PRIME PREDICTION OFFSET (0 = OFF)	T1:	0	FT.
	T2:		FT.
PICKUP DELAY PRIME		15	SEC.
PICKUP DELAY DAX A		0	SEC.
PICKUP DELAY DAX B		0	SEC.
PICKUP DELAY DAX C		0	SEC.
PICKUP DELAY DAX D		0	SEC.
COMPENSATION VALUE	T1:	NOT REQUIRED **	
COMPENSATION VALUE	T2:	NOT REQUIRED **	
ENHANCED DETECTION (EOL)	T1:	ON [ ]	OFF [■]
	T2:	ON [ ]	OFF [■]
BACK TO BACK T1 AND T2 (WHEN CD IS ON)		NO [ ]	YES [■]
STATION STOP TIMER (WHEN CD IS ON)	T1:	N/A (SEE NOTE1)	SEC.
	T2:	N/A (SEE NOTE1)	SEC.
# OF TRACK WIRES - 4 OR 6	T1:	4 [■]	6 [ ]
	T2:	4 [■]	6 [ ]
LOW EZ ADJUSTMENT	T1:	0	
	T2:	0	
LOW EZ DETECTION	T1:	ON [ ]	OFF [■]
	T2:	ON [ ]	OFF [■]
LOW EZ DETECTION TIMER	T1:	N/A (SEE NOTE2)	MIN.
	T2:	N/A (SEE NOTE2)	MIN.
POSITIVE START (0 = OFF) (ENTER EZ VALUE)	T1:	0	EZ
	T2:	0	EZ
POSITIVE START TIMEOUT (0 = NONE) (WHEN POTISIVE START IS ON)	T1:	0	MIN.
	T2:	0	MIN.
SET AT OPERATION		NORMAL [■]	DIAGNOSTIC [ ]
DIAGNOSTIC MESSAGES		ON [ ]	OFF [■]
DAX MESSAGES		ON [ ]	OFF [■]
ADVANCE PREEMP TIMER (0 = OFF)		0	SEC.

** THE COMPENSATION VALUE IS PROVIDED BY THE 3000 GCP SYSTEM AND NO ADDITIONAL PROGRAMMING IS NORMALLY REQUIRED.

* PROGRAMMED AT INSTALLATION DURING CALIBRATION PROCEDURE

☆ = 120' MINIMUM ISLAND DISTANCE TO BE ENTERED BY FIELD PERSONNEL FOR NON-DAXING APPLICATIONS WHEN ROAD IS 20' OR LESS WIDE.

☆☆ = INDICATE ON AS-IN-SERVICE DRAWINGS

FIELD TO COMPLETE ON A.I.S.

		CALIBRATION HISTORY		LINEARIZATION HISTORY				
		EZ/EX VALUES (TRACK UNOCCUPIED)		HARDWIRE SHUNT AT TERMINATION SHUNT	HARDWIRE SHUNT AT 50 PERCENT POINT OF TRACK			
		EZ	EX	EZ VALUE EZ,2 VALUE	NO LINEARIZATION		LINEARIZATION COMPLETE	
					EZ VALUE	STEP #	EZ	
NORTH	TRACK 1							
SOUTH	TRACK 1							

NOTES:

1. WHEN CD SET TO OFF, DEFAULT NOT DISPLAYED
   WHEN CD SET TO ON, DEFAULT IS 10 SEC.
2. WHEN LOW EZ DETECTION SET TO OFF, DEFAULT NOT DISPLAYED
   WHEN LOW EZ DETECTION SET TO ON, DEFAULT IS 10 MIN.

= NOTE

EVANSVILLE WESTERN

EVANSVILLE WESTERN RAILWAY
1500 KENTUCKY AVE. PADUCAH, KY 42003

REVISIONS

PRELIMINARY
NOT FOR CONSTRUCTION

MAUNIE, IL

CIRCUITS AT
CR-21 (LABBE) 346 3487 MP. BBM-351.80

DESIGNED	DIGITIZED	CHECKED	DATE
IRS/JFK	IRS/MDH	IRS/MDH	01-14-00
NEXT FILE	NEXT SH	FILE	SHEET
BBM35180	CR3	BBM35180	CR2

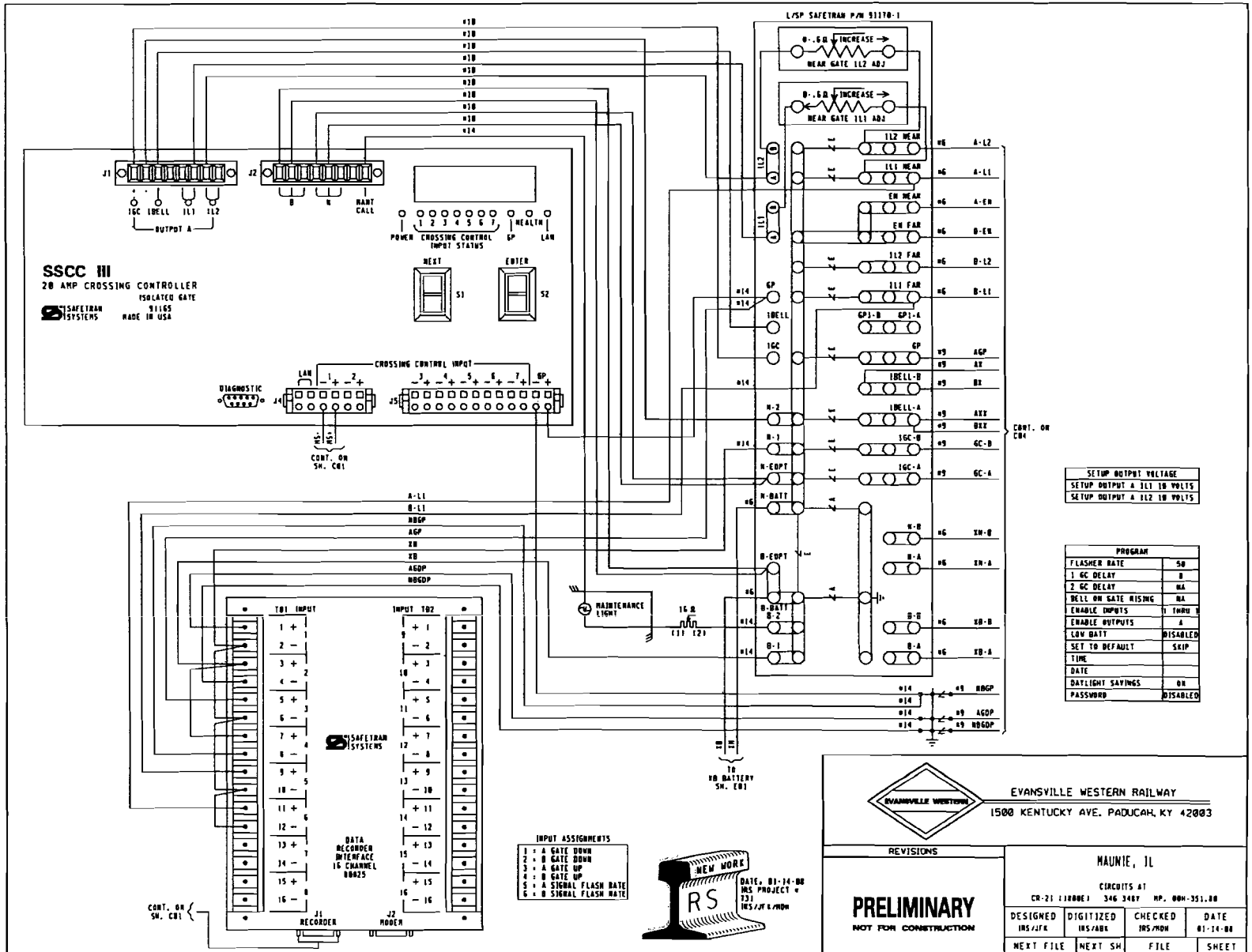
L/SP SAFETRAN P/N 91170-1
0-.6Ω INCREASE
NEAR GATE IL2 ADJ
0-.6Ω INCREASE
NEAR GATE IL1 ADJ
SSCC III
20 AMP CROSSING CONTROLLER
ISOLATED GATE
91165
MADE IN USA
SAFETRAN SYSTEMS
J1
J2
IGC IBELL IL1 IL2
OUTPUT A
B N
HAWT CALL
POWER CROSSING CONTROL INPUT STATUS GP HEALTH LAN
NEXT
ENTER
S1
S2
CROSSING CONTROL INPUT
LAN
GP
DIAGNOSTIC
J4
J5
CONT. ON SH. C01
IL2 NEAR
IL1 NEAR
EN NEAR
EN FAR
IL2 FAR
IL1 FAR
GP1-B GP1-A
IBELL-B
IBELL-A
IGC-B
IGC-A
A-L2
A-L1
A-EN
B-EN
B-L2
B-L1
AGP
AX
BX
AXX
BXX
GC-B
GC-A
CONT. ON C04
SETUP OUTPUT VOLTAGE
SETUP OUTPUT A IL1 18 VOLTS
SETUP OUTPUT A IL2 18 VOLTS
PROGRAM
FLASHER RATE 50
1 GC DELAY 0
2 GC DELAY NA
BELL ON GATE RISING NA
ENABLE INPUTS 1 THRU 6
ENABLE OUTPUTS A
LOW BATT DISABLED
SET TO DEFAULT SKIP
TIME
DATE
DAYLIGHT SAVINGS ON
PASSWORD DISABLED
N-2
N-1
N-EOPT
N-BATT
B-EOPT
B-BATT
B-2
B-1
N-B
N-A
B-B
B-A
XN-B
XN-A
XB-B
XB-A
A-LL
B-LL
NBGP
AGP
XN
XB
AGDP
NBGDP
MAINTENANCE LIGHT
16Ω
(1) (2)
TO XB BATTERY SH. C01
TB1 INPUT
INPUT TB2
SAFETRAN SYSTEMS
DATA RECORDER INTERFACE 16 CHANNEL 88025
J1 RECORDER
J2 MODEM
CONT. ON SH. C01
INPUT ASSIGNMENTS
1 = A GATE DOWN
2 = B GATE DOWN
3 = A GATE UP
4 = B GATE UP
5 = A SIGNAL FLASH RATE
6 = B SIGNAL FLASH RATE
NEW WORK
RS
DATE: 01-14-88
IRS PROJECT # 731
IRS/JFK/MDH
EVANSVILLE WESTERN
EVANSVILLE WESTERN RAILWAY
1500 KENTUCKY AVE. PADUCAH, KY 42003
REVISIONS
PRELIMINARY
NOT FOR CONSTRUCTION
MAUNIE, IL
CIRCUITS AT
CR-21 (1800E) 346 3487 MP. 00H-351.80
DESIGNED IRS/JFK
DIGITIZED IRS/ABK
CHECKED IRS/MDH
DATE 01-14-88
NEXT FILE 00H35180
NEXT SH C04
FILE 00H35180
SHEET C03

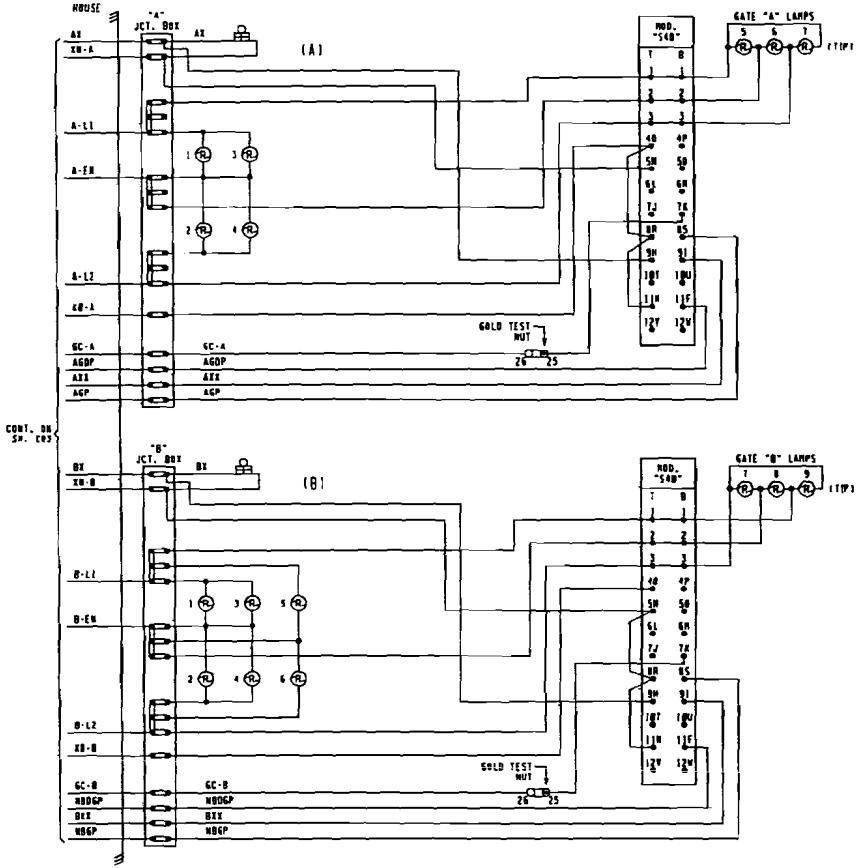

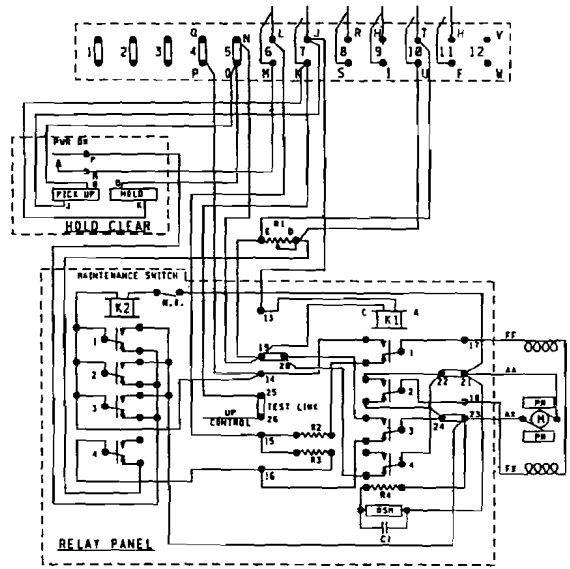

SAFETRAN MODEL "540" GATE

CONTACT SPACE	CONTACT CLOSED AT	FUNCTION OF CONTACT
(6) L-M	45°-90°	POWER DOWN CONTROL
(7) J-K	0°-89°	POWER UP CONTROL
(8) R-S	83°-90°	FLASHING LGT. CONTROL
(9) H-)	5°-90°	BELL CONTROL
(10) T-U	0°- 5°	HORIZONTAL SNUB
(11) H-F	0°- 5°	GATE DOWN

EVANSVILLE WESTERN RAILWAY
1500 KENTUCKY AVE. PADUCAH, KY 42003

REVISIONS

PRELIMINARY
NOT FOR CONSTRUCTION

NEW WORK
RS
DATE: 01-14-00
IRS PROJECT #
T31
IRS/JFK/MDK

MAUNIE, IL

CIRCUITS AT
CR-21 (100OE) 146 34BT MP. 00H-351.00

DESIGNED	DIGITIZED	CHECKED	DATE
IRS/JFK	IRS/ABK	IRS/MDK	01-14-00
NEXT FILE	NEXT SH	FILE	SHEET
		00H35100	C04