U.S. DEPARTMENT OF COMMERCE
NATIONAL BUREAU OF STANDARDS

SAFETY RULES FOR THE INSTALLATION AND MAINTENANCE OF ELECTRIC SUPPLY AND COMMUNICATION LINES

Comprising Part 2, the Definitions, and the Grounding Rules of the [illegible] Edition of the National Electrical Safety Code

National Bureau of Standards Handbook [illegible]
(Supersedes H32, and amends in part Pts. 2, Definitions and the Grounding Rules of H30 and H [illegible])

1961 NESC

EXHIBIT F-3

U.S. DEPARTMENT OF COMMERCE
Luther H. Hodges, *Secretary*

NATIONAL BUREAU OF STANDARDS
A. V. Astin, *Director*

SAFETY RULES FOR THE INSTALLATION AND MAINTENANCE OF ELECTRIC SUPPLY AND COMMUNICATION LINES

Comprising Part 2, the Definitions and the Grounding Rules of the Sixth Edition of the National Electrical Safety Code

Approved by American Standards Association
June 8, 1960 as American Standard C2.2-1960
(UDC 621.316.9)

National Bureau of Standards Handbook 81

Supersedes Handbook H32 and amends in part Pt. 2, Definitions and the Grounding Rules of Handbooks H30 and H43)

Issued November 1, 1961

For sale by the Superintendent of Documents, U.S. Government Printing Office
Washington 25, D.C. - Price $1.75

PREFACE

In preparation of the first few editions of the code, the Bureau held meetings in many parts of the country and welcomed suggestions from everyone concerned. It, however, reserved to itself the final decision on all contested points. The procedure followed in later revisions subsequent to the establishment of the American Standards Association differs essentially from the former practice in that final decisions as to all details are made by the sectional committees formally approved by the American Standards Association and operating under their rules of procedure. The Bureau, as sponsor for the work under this procedure, has given up its prerogative of determining details in return for the implied understanding that the many parties concerned will accept such a code as they can agree upon among themselves. All such codes of practice necessarily include compromises between conflicting aims. The Bureau has felt that decisions made by practically unanimous agreement among the interests affected would, in general, be wiser than those at which it might arrive after weighing the arguments of advocates for different views. It has, therefore, welcomed this procedure in spite of the fact that this involves the acceptance of some details of which it might not itself approve.

Rules in this code which are to be regarded as mandatory are characterized by the use of the word "shall." Where a rule is of an advisory nature it is indicated by the use of the word "should." Other practices which are considered desirable and not intended to be mandatory are stated as recommendations. It is realized that conditions may exist which necessitate departures from such recommendations.

A representative Committee on Interpretations has been set up to prepare replies to requests for interpretation of these rules. Requests for interpretation should state the rule in question as well as the conditions under which it is being

applied. Interpretations are intended to clarify the intent of specific rules and are not intended to supply consulting information on the application of the code. Requests for interpretation addressed to the National Bureau of Standards, if suitable for processing, will be sent to the Interpretations Committee. After due consideration by the Committee, which may involve many exchanges of correspondence, the inquirer will be notified of its decision.

1. **Alive** or **live** means electrically connected to a source of potential difference, or electrically charged so as to have a potential different from that of the earth. The term "live" is sometimes used in place of the term "current-carrying," where the intent is clear, to avoid repetitions of the longer term.

2. **Appliance** means current-consuming equipment, fixed or portable; for example, heating, cooking, and small motor-operated equipment.

3. **Automatic** means self-acting, operating by its own mechanism when actuated by some impersonal influence—as, for example, a change in current strength; not manual, without personal intervention. Remote control that requires personal intervention is not automatic, but manual.

4. **Cable vault.** (See definition of "Manhole.")

5. **Circuit** means a conductor or system of conductors through which an electric current is intended to flow.

6. **Circuit-breaker** means a device designed to open under abnormal conditions a current-carrying circuit without injury to itself. The term as used in this code applies only to the automatic type designed to trip on a predetermined overload of current.

7. **Climbing space** means the vertical space reserved along the side of a pole or structure to permit ready access for linemen to equipment and conductors located on the pole structure.

8. **Common use** means simultaneous use by two or more utilities of the same kind.

9. **Conductor** means a metallic conducting material, usually in the form of a wire or cable, suitable for carrying an electric current. Does not include bus bars.

10. **Grounding conductor** means a conductor which is used to connect the equipment or the wiring system with a grounding electrode or electrodes.

11. **Lateral conductor** means, in pole wiring work, a wire or cable extending in a general horizontal direction approximately at right angles to the general direction of the line conductors.

12. **Line conductor** means one of the wires or cables carrying electric current, supported by poles, towers, or other structures, but not including vertical or lateral connecting wires.

13. **Vertical conductor** means, in pole wiring work, a wire or cable extending in an approximately vertical direction.

Conflict:

14. **Antenna conflict** means that an antenna or its guy wire is at a higher level than a supply or communication conductor and approximately parallel thereto, provided the breaking of the antenna or its support will be likely to result in contact between the antenna or guy wire and the supply or communication conductor.

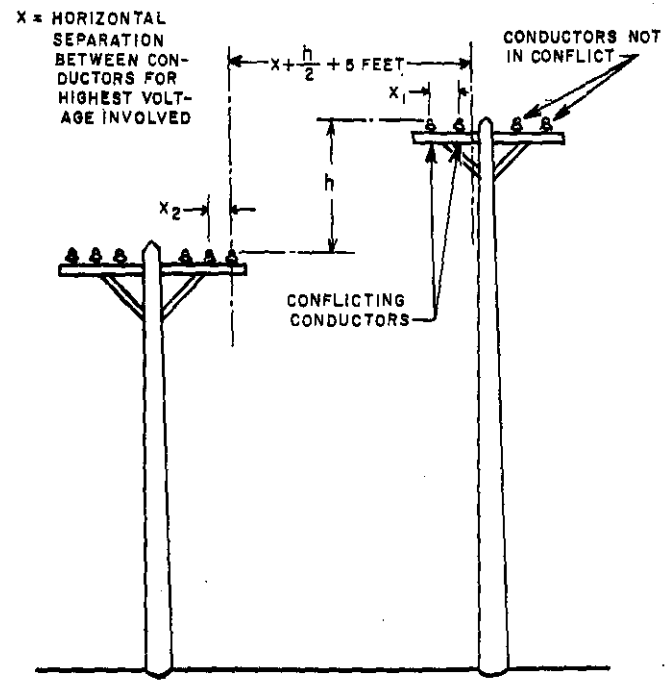

FIGURE 1. *Conductor conflict.*

15. **Conductor conflict** means that a conductor is so situated with respect to a conductor of another line at a lower level that the horizontal distance between them is less than the sum of the following values:

(a) Five feet.

(b) One-half the difference of level between the conductors concerned.

(c) The value required in tables 6, 7, or 8 for horizontal separation between conductors on the

60. **Maximum total sag** means the total sag at the midpoint of the straight line joining the two points of support of the conductor.

61. **Total sag** means the distance measured vertically from any point of a conductor to the straight line joining its two points of support, under conditions of ice loading equivalent to the total resultant loading for the district in which it is located.

62. **Unloaded sag of a conductor at any point in a span** means the distance measured vertically from the particular point in the conductor to a straight line between its two points of support, without any external load.

63. **Service** means the conductors and equipment for delivering electric energy from the secondary distribution or street main, or other distribution feeder, or from the transformer, to the wiring system of the premises served. For overhead circuits, it includes the conductors from the last line pole to the service switch or fuse. The portion of an overhead service between the pole and building is designated as "service drop."

64. **Span length** means the horizontal distance between two adjacent supporting points of a conductor.

65. **Splicing chamber.** (See definition of "Manhole.")

66. **Substantial** means so constructed and arranged as to be of adequate strength and durability for the service to be performed under the prevailing conditions.

67. **Switch** means a device for opening and closing or for changing the connection of a circuit. In these rules, a switch will always be understood to be manually operated, unless otherwise stated.

68. **Switchboard** when referred to in connection with supply of electricity means a large single panel, frame, or assembly of panels, on which are mounted (on the face, or back, or both) switches, fuses, busses, and usually instruments.

69. **Tags** means "men at work" tags of distinctive appearance, indicating that the equipment or lines so marked are being worked on.

Tension:

70. **Final unloaded conductor tension** means the longitudinal tension in a conductor after the conductor has been stretched by the application for an appreciable period, and subsequent release, of the loadings of ice and wind, and temperature decrease, assumed for the loading district in which the conductor is strung (or equivalent loading).

71. **Initial conductor tension** means the longitudinal tension in a conductor prior to the application of any external load.

72. **Transformer vault** means an isolated inclosure either above or below ground with fire-resistant walls, ceiling, and floor, in which transformers and related equipment are installed, and which is not continuously attended during operation.

73. **Urban districts** means thickly settled areas (whether in cities or suburbs) or where congested traffic often occurs. A highway, even though in the country, on which the traffic is often very heavy, is considered as urban.

Voltage:

74. **Voltage of an effectively grounded circuit** means the highest effective voltage between any conductor and ground unless otherwise indicated.

75. **Voltage of a circuit not effectively grounded** means the highest effective voltage between any two conductors unless otherwise indicated.

If one circuit is directly connected to another circuit of higher voltage (as in the case of an autotransformer), both are considered as of the higher voltage, unless the circuit of lower voltage is effectively grounded, in which case its voltage is not determined by the circuit of higher voltage. Direct connection implies electric connection as distinguished from connection merely through electromagnetic or electrostatic induction.

Voltage to ground of:

76. **A grounded circuit** means the highest effective voltage between any conductor of the circuit and that point or conductor of the circuit which is grounded.

77. **An ungrounded circuit** means the highest effective voltage between any two conductors of the circuit concerned.

Voltage to ground of a conductor of:

78. **A grounded circuit** means the highest effective voltage between such conductor and that point or conductor of the circuit which is grounded.

79. **An ungrounded circuit** means the highest effective voltage between such conductor and any other conductor of the circuit concerned.

EXHIBIT F-4

IEEE Std 100-1972 • ANSI C42.100-1972
(Consolidates and Supersedes
all previous C42 Series Standards.)

An American National Standard

Approved September 28, 1972 by the American National Standards Institute

IEEE Standard Dictionary of Electrical and Electronics Terms

aerospace and electronics systems antennas and propagation audio and electroacoustics automatic control broadcast and television receivers broadcasting circuit theory communication technology computer education electrical insulation electromagnetic compatibility electron devices engineering in medicine and biology engineering management engineering writing and speech geoscience electronics industrial electronics and control instrumentation industry and general applications information theory instrumentation and measurement magnetics man-machine systems microwave theory and techniques nuclear science parts, materials, and packaging power reliability sonics and ultrasonics systems science and cybernetics vehicular technology

connected together and the negative terminals are connected together in a corresponding manner. *See also:* **battery (primary or secondary).** 42A60-0

series-parallel control. A method of controlling motors wherein the motors, or groups of them, may be connected successively in series and in parallel. *See also:* **multiple-unit control.** 42A42-0

series-parallel network. Any network, containing only two-terminal elements, that can be constructed by successively connecting branches in series and/or in parallel. *Note:* An elementary example is the parallel combination of two branches, one containing resistance and inductance in series, the other containing capacitance. This network is sometimes called a **simple parallel circuit.** *See also:* **network analysis.**
*Deprecated E270-0

series-parallel starting (rotating machinery). The process of starting a motor by connecting it to the supply with the primary winding phase circuits initially in series, and changing them over to a parallel connection for running operation. *See also:* **asynchronous machine; synchronous machine.** 0-31E8

series rectifier circuit. A rectifier circuit in which two or more simple rectifier circuits are connected in such a way that their direct voltages add and their commutations coincide. *See also:* **rectification; rectifier circuit element.** E59/42A15-34E17

series regulator (power supplies). A device placed in series with a source of power that is capable of controlling the voltage or current output by automatically varying its series resistance. *See:* **passive element.** *See also:* **power supply.** KPSH-10E1

series relay. *See:* **current relay.** *See also:* **relay.** 83A16-0

series resistor (electric instrument). A resistor that forms an essential part of the voltage circuit of an instrument and generally is used to adapt the instrument to operate on some designated voltage or voltages. The series resistor may be internal or external to the instrument. *Note:* Inductors, capacitors, or combinations thereof are also used for this purpose. *See also:* **auxiliary device to an instrument.** 39A1/42A30-0

series resonance. The steady-state condition that exists in a circuit comprising inductance and capacitance connected in series, when the current in the circuit is in phase with the voltage across the circuit. 42A65-31E3

series system. The arrangement in a multielectrode electrolytic cell whereby in each cell an anode connected to the positive bus bar is placed at one end and a cathode connected to the negative bus bar is placed at the other end, with the intervening unconnected electrodes acting as bipolar electrodes. *See also:* **electrorefining.** 42A60-0

series tee junction (waveguides). A tee junction having an equivalent circuit in which the impedance of the branch guide is predominantly in series with the impedance of the main guide at the junction. *See also:* **waveguide.** E147-3E1

series-trip recloser. A recloser in which main-circuit current above a specified value, flowing through a solenoid or operating coil, provides the energy necessary to open the main contacts. 37A100-31E11

series two-terminal pair networks. Two-terminal pair networks are connected in series at the input or at the output terminals when their respective input or output terminals are in series. *See also:* **network analysis.** E153-0

series undercurrent tripping. *See:* **direct release (series trip); undercurrent release (undercurrent trip).**

series winding (autotransformer). The portion of the autotransformer winding that is not common to both the primary and the secondary circuits, but is connected in series between the input and output circuits. *See also:* **autotransformer.** 57A15-0

series-wound (rotating machinery). A qualifying term applied to a machine to denote that the excitation is supplied by a winding or windings connected in series with or carrying a current proportional to that in the armature winding. *See:* **asynchronous machine; direct-current commutating machine.** 42A10-31E8

series-wound motor. A commutator motor in which the field circuit and armature circuit are connected in series. *See:* **asychonous machine; direct-current commutating machine.** 42A10-31E8

service (1) (electric systems). The conductors and equipment for delivering electric energy from the secondary distribution or street main, or other distribution feeder, or from the transformer, to the wiring system of the premises served. *Note:* For overhead circuits, it includes the conductors from the last line pole to the service switch or fuse. The portion of an overhead service between the pole and building is designated as service drop.
See:
circuit;
dual service;
duplicate service;
emergency service;
loop service;
service cable;
service conductors;
service drop;
service entrance conductors;
service equipment;
service lateral;
service pipe;
service raceway;
single service. 1A0/2A2-0

(2) (controller) (industrial control). The specific application in which the controller is to be used, for example: (A) general purpose, (B) definite purpose, for example, crane and hoist, elevator, machine tool, etcetera. *See:* **electric controller.** 1C1-34E10

service area (navigation). The area within which a navigational aid provides either generally satisfactory service or a specific quality of service. *See also:* **navigation.** 0-10E6

service band. A band of frequencies allocated to a given class of radio service. *See also:* **radio transmission.** E145/E182/42A65-0

service bits (telecommunication). Those bits that are neither check nor information bits. *See also:* **bit.** 0-19E4

service cable. Service conductors made up in the form of a cable. *See:* **service conductors.** *See also:* **service.** 42A35-31E13

service capacity (cell or battery). The electric output (expressed in ampere-hours, watthours, or similar units) on a service test before its working voltage falls to a specified cutoff voltage. *See also:* **battery (primary**

or secondary). 42A60-0

service conductors. That portion of the supply conductors that extends from the street mains or feeder or transformer to the service equipment of the premises served. For an overhead system it includes the conductors from the last line pole to the service equipment. *See also:* **service.** 42A35-31E13

service corrosion (dry cell). The consumption of the negative electrode as a result of useful current delivered by the cell. *See also:* **electrolytic cell.** 42A60-0

service drop. That portion of overhead service conductors between the last pole and the premises served, extending from the pole to the junction with the service entrance conductors. *See also:* **service.** 42A35-31E13

service entrance conductors (electric system) (1) (overhead system). The service conductors between the terminals of the service equipment and a point usually outside the building, clear of building walls, where joined by tap or splice to the service drop.

(2) (underground system). The service conductors between the terminals of the service equipment and the point of connection to the service lateral. *Note:* Where service equipment is located outside the building walls, there may be no service-entrance conductors, or they may be entirely outside the building. 42A35/1A0-31E13

service equipment (electric system). The necessary equipment, usually consisting of circuit breaker or switch and fuses, and their accessories, located near point of entrance of supply conductors to a building and intended to constitute the main control and means of cutoff for the supply to that building. *See also:* **distribution center; service.** 1A0/42A35-31E13

service factor (general-purpose alternating-current motor). A multiplier that, when applied to the rated power, indicates a permissible power loading that may be carried under the conditions specified for the service factor. *See also:* **asynchronous machine; direct-current commutating machine; synchronous machine.** MG1-31E8

service ground. A ground connection to a service equipment or a service conductor or both. *See:* **ground.** 42A35-31E13

service lateral (electric system). The underground service conductors between the street main, including any risers at a pole or other structure or from transformers, and the first point of connection to the service entrance conductors in a terminal box inside or outside the building wall. Where there is no terminal box, the point of connection shall be considered to be the point of entrance of the service conductors into the building. *See also:* **service.** 1A0-0

service life (1) (primary cell or battery). The period of useful service before its working voltage falls to a specified cutoff voltage.

(2) (storage cell or battery). The period of useful service under specified conditions, usually expressed as the period elapsed before the ampere-hour capacity has fallen to a specified percentage of the rated capacity. *See also:* **battery (primary or secondary); charge.** 42A60-0

service period (illuminating engineering). The number of hours per day for which the day lighting provides a specified illumination level. It often is stated as a monthly average. *See also:* **sunlight.** Z7A1-0

service pipe. The pipe or conduit that contains underground service conductors and extends from the junction with outside supply wires into the customer's premises. *See:* **distributor duct.** *See also:* **service.** 42A35-31E13

service raceway (electric system). The rigid metal conduit, electrical metallic tubing, or other raceway, that encloses the service entrance conductors. *See also:* **service.** 1A0-0

service rating (rectifier transformer). The maximum constant load that, after a transformer has carried its continuous rated load until there is no further measurable increase in temperature rise, may be applied for a specified time without injury. *See also:* **rectifier transformer.** 57A18-0

service routine (computing systems). A routine in general support of the operation of a computer, for example, an input-output, diagnostic, tracing, or monitoring routine. *See:* **utility routine.** *See also:* **electronic digital computer.** X3A12-16E9

service test (1) (primary battery). A test designed to measure the capacity of a cell or battery under specified conditions comparable with some particular service for which such cells are used. 42A60-0

(2) (field test) (meter). A test made during the period that the meter is in service. *Note:* A service test may be made on the consumer's premises without removing the meter from its support, or by removing the meter for test, either on the premises or in a laboratory or meter shop.

See also:
approval test;
battery;
dielectric tests;
inspection;
installation test;
office test;
periodic test;
referee test;
reference performance;
request test;
shop test;
watthour meter. 12A0/42A30-0

servicing time (electric drive). The portion of down time that is necessary for servicing due to breakdowns or for preventive servicing measures. *See:* **electric drive.** AS1-34E10

serving (cable). A wrapping applied over the core of a cable before the cable is leaded, or over the lead if the cable is armored. *Note:* Materials commonly used for serving are jute or cotton. The serving is for mechanical protection and not for insulating purposes. *See also:* **power distribution, underground construction.** 42A35-31E13

servo. *See:* **servomechanism.**

servo amplifier. An amplifier, used as part of a servomechanism, that supplies power to the electric input terminals of a mechanical actuator. *See also:* **electronic analog computer.** E165-16E9

servomechanism. (1) A feedback control system in which at least one of the system signals represents mechanical motion. (2) Any feedback control system. (3) An automatic feedback control system in which the controlled variable is mechanical position or any of its time derivatives. *See also:* **control system, feedback.** 85A1/X3A12-16E9/23E0/34E12

IEEE 100

THE AUTHORITATIVE DICTIONARY OF IEEE STANDARDS TERMS

SEVENTH EDITION

2000 IEEE Standard Terms

EXHIBIT F-5

IEEE
Published by
Standards Information Network
IEEE Press

IEEE 100

The Authoritative Dictionary of IEEE Standards Terms

Seventh Edition

IEEE 100
The Authoritative Dictionary of IEEE Standards Terms

Seventh Edition

2000 Dictionary

IEEE
Published by
Standards Information Network
IEEE Press

prefix code (telephone switching systems) One or more digits preceding the national or international number to implement direct distance dialing. (COM) 312-1977w

prefixes and symbols (International System of Units (SI)) Used to form names and symbols of the decimal mutiples and submultiples of the SI units:

Prefix	Abbreviation	Factor
tera- (megamega-	T (MM*)	10^{12}
giga- (kilomega-*)	G (kM*)	10^{9}
mega-	M	10^{6}
myria-		10^{4}
kilo-	k	10^{3}
hecto-	h	10^{2}
deka-		10
deci-	d	10^{-1}
centi-	c	10^{-2}
milli-	m	10^{-3}
decimilli-	dm	10^{-4}
micro-	μ	10^{-6}
nano- (millimicro-*)	n (mμ*)	10^{-9}
pico- (micromicro-*)	p (μμ*)	10^{-12}

*Deprecated.

These prefixes or their symbols are directly attached to names or symbols of units, forming multiples and submultiples of the units. In strict terms these must be called "multiples and submultiples of SI units," particularly in discussing the coherence of the system. In common parlance, the base units and derived units, along with their multiples and submultiples, are all called SI units. *See also:* units and letter symbols.

prefix multipliers The prefixes listed in the following table, when applied to the name of a unit, serve to form the designation of a unit greater or smaller than the original by the factor indicated.

Multiplication Factor	Prefix	Symbol
1 000 000 000 000 000 000 = 10^{18}	exa	E
1 000 000 000 000 000 = 10^{15}	peta	P
1 000 000 000 000 = 10^{12}	tera	T
1 000 000 000 = 10^{9}	giga	G
1 000 000 = 10^{6}	mega	M
1 000 = 10^{3}	kilo	k
100 = 10^{2}	hecto*	h
10 = 10^{1}	deka*	da
0.1 = 10^{-1}	deci*	d
0.01 = 10^{-2}	centi	c
0.001 = 10^{-3}	milli	m
0.000 001 = 10^{-6}	micro	μ
0.000 000 001 = 10^{-9}	nano	n
0.000 000 000 001 = 10^{-12}	pico	p
0.000 000 000 000 001 = 10^{-15}	femto	f
0.000 000 000 000 000 001 = 10^{-18}	atto	a

*Deprecated.

270-1966w

prefix notation (mathematics of computing) A parenthesis-free method of forming mathematical expressions devised by the Polish logician Jan Lukasiewicz, in which each operator is immediately followed by its operands. For example, A added to B and the result multiplied by C is expressed as X + ABC. *Synonyms:* parenthesis-free notation; Lukasiewicz notation; Polish notation. *Contrast:* postfix notation; infix notation. (C) 1084-1986w

preform (fiber optics) A glass structure from which an optical fiber waveguide may be drawn. *See also:* ion exchange technique; chemical vapor deposition technique; optical blank. (Std100) 812-1984w

preformed coil or coil side (rotating machinery) An element of a preformed winding, composed of conductor strands, usually insulated and sometimes transposed, cooling ducts in some designs, turn insulation where number of turns exceeds one, and coil insulation. *See also:* rotor; stator. (PE) [9]

preformed winding A winding consisting of coils which are given their shape before being assembled in the machine. (PE) [9]

P register A special-purpose instruction address register that holds the address of the next instruction to be fetched or executed. (C) 610.10-1994w

preheat (switch start) fluorescent lamp (illuminating engineering) A fluorescent lamp designed for operation in a circuit requiring a manual or automatic starting switch to preheat the electrodes in order to start the arc. (EEC/IE) [126]

preheating time (mercury-arc valve) The time required for all parts of the valve to attain operating temperature. (ED) [45], [84]

preheating time cathode (electron tube) The minimum period of time during which the heater voltage should be applied before the application of other electrod voltages. *See also:* heater current. (ED) [45]

preheat-starting (fluorescent lamps) (switch-starting systems) The designation given to those systems in which hot-cathode electric discharge lamps are started from preheated cathodes through the use of a starting switch, either manual or automatic in its operation. *Note:* The starting switch, when closed, connects the two cathodes in series in the ballast circuit so that current flows to heat the cathodes to emission temperature. When the switch is opened, a voltage surge is produced that initiates the discharge. Only the arc current flows through the cathodes after the lamp is in operation. *See also:* fluorescent lamp. (EEC/IE) [126]

preliminary design (A) (software) The process of analyzing design alternatives and defining the architecture, components, interfaces, and timing and sizing estimates for a system or component. *See also:* detailed design. **(B) (software)** The result of the process in definition "A." (C) 610.12-1990

preliminary design review (A) A review conducted to evaluate the progress, technical adequacy, and risk resolution of the selected design approach for one or more configuration items; to determine each design's compatibility with the requirements for the configuration item; to evaluate the degree of definition and assess the technical risk associated with the selected manufacturing methods and processes; to establish the existence and compatibility of the physical and functional interfaces among the configuration items and other items of equipment, facilities, software and personnel; and, as applicable, to evaluate the preliminary operational and support documents. *See also:* critical design review; system design review. **(B)** A review, as in definition "A" of any hardware or software component. (C) 610.12-1990

preliminary relay contacts Contacts that open or close in advance of other contacts when the relay is operating. (EEC/REE) [87]

premises wiring (system) That interior and exterior wiring, including power, lighting, control, and signal circuit wiring together with all of its associated hardware, fittings, and wiring devices, both permanently and temporarily installed, which extends from the load end of the service drop, or load end of the service lateral conductors to the outlet(s). Such wiring does not include wiring internal to appliances, fixtures, motors, controllers, motor control centers, and similar equipment. (NEC/NESC) [86]

premolded A joint that is factory molded in the shape which it will take when installed. Installation is performed by sliding the joint over the cable. The use of heat is not a part of the installation procedure. (PE/IC) 404-1993

pre-molded joint (power cable joints) A joint made of premolded components assembled in the field. (PE/IC) 404-1986e

preoperational system test (Class 1E power systems and equipment) A test to confirm that all individual components parts of a system function as a system and the system functions as designed. A preoperational test is performed following significant modifications or additions made to the facility at later dates. (PE/NP) 415-1986w

preoperational testing All testing required for system components prior to energizing or operating the major system component. (PE/EDPG) 1248-1998

preorder traversal The process of traversing a binary tree in a recursive fashion as follows: the root is visited, then the left subtree is traversed, then the right subtree is traversed. *Con-*

ries combination does not exceed the interrupting rating of the main overcurrent protective device.
(IA/PSP) 1015-1997

series rectifier circuit A rectifier circuit in which two or more simple rectifier circuits are connected in such a way that their direct voltages add and their commutations coincide. *See also:* rectifier circuit element; rectification. (IA) [12]

series regulator (power supplies) A device placed in series with a source of power that is capable of controlling the voltage or current output by automatically varying its series resistance. (AES) [41]

series relay *See:* relay; current relay.

series resistor (electric instruments) A resistor that forms an essential part of the voltage circuit of an instrument and generally is used to adapt the instrument to operate on some designated voltage or voltages. The series resistor may be internal or external to the instrument. *Note:* Inductors, capacitors, or combinations thereof are also used for this purpose. *See also:* auxiliary device to an instrument. (EEC/AII) [102]

series snubber (ac adjustable-speed drives) Circuit elements, usually including an inductor, connected in series with a switching device to limit the rate of rise or fall of current through the device when switching on or off, respectively. *See also:* snubber. (IA/ID/SPC) 995-1987w, 936-1987w

series street-lighting transformer (power and distribution transformers) A series transformer that receives energy from a current-regulating series circuit and that transforms the energy to another winding at the same or different current from that in the primary. *See also:* specialty transformer.
(PE/TR) C57.12.80-1978r, [57]

series system The arrangement in a multielectrode electrolytic cell whereby in each cell an anode connected to the positive bus bar is placed at one end and a cathode connected to the negative bus bar is placed at the other end, with the intervening unconnected electrodes acting as bipolar electrodes. *See also:* electrorefining. (EEC/PE) [119]

series tee junction *See:* E-plane tee junction.

series thyristor converter A thyristor converter in which two or more simple converters are connected in such a way that their direct voltages add and their commutations coincide.
(IA/IPC) 444-1973w

series transformer (1) (power and distribution transformers) A transformer with a "series" winding and an "exciting" winding, in which the "series" winding is placed in a series relationship in a circuit to change voltage or phase, or both, in that circuit as a result of input received from the "exciting" winding. *Note:* Applications of series transformers include:

1) Use in a transformer such as a load-tap-changing or regulating transformer to change the voltage or current duty of the load-tap-changing mechanism.
2) Inclusion in a circuit for power factor correction to indirectly insert series capacitance in a circuit by connecting capacitors to the exciting winding.

(PE/TR) C57.12.80-1978r

(2) A transformer in which the primary winding is connected in series with a power-supply circuit, and that transfers energy to another circuit at the same or different current from that in the primary circuit. *See also:* transformer. (PE/TR) [57]

series transformer rating (power and distribution transformers) The lumen rating of the series lamp, or the wattage rating of the multiple lamps, that the transformer is designed to operate. (PE/TR) C57.12.80-1978r

series-trip recloser A recloser in which main-circuit current above a specified value, flowing through a solenoid or operating coil, provides the energy necessary to open the main contacts. (SWG/PE) C37.100-1992

series two-terminal pair networks Two-terminal pair networks are connected in series at the input or at the output terminals when their respective input or output terminals are in series. *See also:* network analysis. (BT) 153-1950w

series undercurrent tripping *See:* direct release; undercurrent release.

series unit (power and distribution transformers) The core and coil unit which has one winding connected in series in the line circuit. (PE/TR) C57.12.80-1978r

series weighting Response weighting by separating a finger into individual elements with capacitive coupling between them; the elements may be separated from the bus bar.
(UFFC) 1037-1992w

series winding (1) (A) (autotransformer) (power and distribution transformers) That portion of the autotransformer winding which is not common to both the primary and the secondary circuits, but is connected in series between the input and output circuits. **(B) (power and distribution transformers)** The winding of the series unit which is connected in series in the line circuit. *Note:* If the main unit of a two-core transformer is an autotransformer, both units will have a series winding. In such cases, one is referred to as the series winding of the autotransformer and the other, the series winding of the series unit. (PE/TR) C57.12.80-1978
(2) That portion of the autotransformer winding that is not common to both the primary and secondary circuits, but is connected in series between the input and output circuits.
(PE/TR) C57.15-1999

series-wound (rotating machinery) A qualifying term applied to a machine to denote that the excitation is supplied by a winding or windings connected in series with or carrying a current proportional to that in the armature winding. *See also:* asynchronous machine. (PE) [9]

series-wound motor (1) The conductors and equipment for delivering energy from the electricity supply system to the wiring system of the premises served. (NESC/NEC) [86]
(2) A dc motor in which the field circuit and armature circuit are connected in series. Speed is inversely proportional to the square root of load torque. Motor operates at a much higher speed at light load than at full load. (IA/MT) 45-1998

servant A device that is controlled by a commander. There are message-based and register-based servants.
(C/MM) 1155-1992

server (1) (telecommunications switching systems) A system component that performs operations required for the processing of a call. *See also:* traffic usage count.
(COM/TA) 973-1990w
(2) (MULTIBUS II) An agent that performs a service for clients. *See also:* client. (C/MM) 1296-1987s
(3) In a network, a device or computer system that is dedicated to providing specific facilities to other devices attached to the network. *Contrast:* client. *See also:* mail server; disk server; file server; terminal server; network server; database server; print server. (C) 610.7-1995
(4) The facility in the terminal or work station that provides input (keyboard, mouse) and output (screen graphics) services to the application. *Synonym:* X server. (C) 1295-1993w
(5) The software component on one device that provides services for use by clients on the same or another device.
(C/MM) 1284.4-2000
(6) *See also:* batch server.

Server Object Any Object that executes one or more of its operations in response to a request from a Client object.
(IM/ST) 1451.1-1999

Server Object Tag An attribute of a Client Port that identifies the Object Tag of the Server Object with which the Port communicates in client-server communications.
(IM/ST) 1451.1-1999

Service An instance of a subclass of `IEEE1451_Service`.
(IM/ST) 1451.1-1999

service (1) (electric systems) The conductors and equipment for delivering electric energy from the secondary distribution or street main, or other distribution feeder, or from the transformer, to the wiring system of the premises served. *Note:* For overhead circuits, it includes the conductors from the last line pole to the service switch or fuse. The portion of an

overhead service between the pole and building is designated as service drop. (NESC) [86]

(2) (controller) The specific application in which the controller is to be used, for example: general purpose; definite purpose (for example, crane and hoist, elevator, machine tool, etc). *See also:* electric controller. (IA/ICTL/IAC) [60]

(3) A distinct part of the functionality that is provided by an entity on one side of an interface to an entity on the other side of the interface. (C/PA) 14252-1996

(4) The delivery, installation, maintenance, training, and other labor-intensive activities providing life-cycle support associated with the products and processes of the system. (C/SE) 1220-1994s

(5) System behavior as perceived by the system user. (C/BA) 896.9-1994w

(6) Software that implements the interface. (C/PA) 1351-1994w, 1224-1993w, 1224.1-1993w, 1327-1993w, 1328-1993w

(7) Capabilities provided by a tool or user to get a job done. (ATLAS) 1232-1995

(8) A software interface, frequently implemented as a software function, providing a means for communicating information between two applications. (SCC20) 1232.1-1997

(9) Operation or run-time call whose behavior and interface are standardized. *See also:* method. (SCC20) 1226-1998

(10) The operation of the vehicles under normal conditions with or without revenue passengers. (VT) 1475-1999

(11) An action or response initiated by a process (i.e., a server) at the request of some other process (i.e., a client). (SCC20) 1232.2-1998

(12) (local area networks) The capabilities and action provided by one layer for another. (C) 8802-12-1998

(13) The capabilities and features provided by an N-layer to an N-user. (C/LM/CC) 8802-2-1998

service access point (SAP) (1) The point at which services are provided by one layer (or sublayer) to the layer (or sublayer) immediately above it (ISO 7498). (LM/C) 610.7-1995, 8802-6-1994

(2) An address that identifies a user of the services of a protocol entity. (C/EMB/MIB) 610.7-1995, 1073.3.2-2000

service area (1) (navigation) (navigation aids) The area within which a navigational aid provides either generally satisfactory service or a specific quality of service. (AES/GCS) 172-1983w

(2) The territory in which a utility system is required or has the right to supply or make available electric service to the ultimate customer. (PE/PSE) 858-1993w

service band A band of frequencies allocated to a given class of radio service. *See also:* radio transmission. (AP/BT/ANT) 145-1983s, 182-1961w

service bits (telecommunications) Those bits that are neither check nor information bits. *See also:* bit. (COM) [49]

service brake (maximum) A nonemergency brake application that obtains the (maximum) brake rate that is consistent with the design of the brake system, retrievable under the control of master control. (VT) 1475-1999

service braking *See:* service brake.

service cable Service conductors made up in the form of a cable. (NESC/NEC) [86]

service capacity (cell or battery) The electric output (expressed in ampere-hours, watthours, or similar units) on a service test before its working voltage falls to a specified cutoff voltage. *See also:* battery. (EEC/PE) [119]

service circuit (telephone switching systems) A circuit used for signaling purposes connected to and disconnected from a communication path during the progress of a call. (COM) 312-1977w

service circuits Common or shared equipment units or software facilities (e.g., registers) associated with lines or trunks to provide specialized functions. Examples of service circuits include the following:

1) Customer digit receivers
2) Interoffice receivers
3) Interoffice transmitters
4) Ringing circuits
5) Universal announcement circuits
6) Tone circuits
7) Conference circuits
8) Memory registers

(COM/TA) 973-1990w

service class (use in primitives) A parameter used to convey the class of service required or desired. (C/LM/CC) 8802-2-1998

service code (telephone switching systems) Any of the destination codes for use by customers to obtain directory assistance or repair service, or to reach the business office of the telecommunications company. (COM) 312-1977w

service condition (thermal classification of electric equipment and electrical insulation) A combination of factors of influence, which are to be expected in a specific application of electric equipment. (EI) 1-1986r

service conditions (nuclear power generating station) (valve actuators) (safety systems equipment in nuclear power generating stations) Environmental, loading, power and signal conditions expected as a result of normal operating requirements, expected extremes (abnormal) in operating requirements, and postulated conditions appropriate for the design-basis events of the station. (PE/NP/EDPG) 382-1985, 323-1974as, 650-1979s, 317-1983r, 649-1980s, 690-1984r, 627-1980s

service conductors The supply conductors that extend from the street main or from transformers to the service equipment of the premises supplied. (NESC/NEC) [86]

service controls Parameters conveyed as part of a directory operation that constrain various aspects of its performance. (C/PA) 1328.2-1993w, 1327.2-1993w, 1224.2-1993w, 1326.2-1993w

service corrosion (dry cell) The consumption of the negative electrode as a result of useful current delivered by the cell. *See also:* electrolytic cell. (EEC/PE) [119]

service current, continuous *See:* continuous service current.

service data unit (SDU) (1) Information that is delivered as a unit between peer service access points (SAPs). *See also:* service access point. (LM/C/EMB/MIB) 8802-6-1994, 1073.3.2-2000

(2) The 48-byte data payload of an asynchronous transfer mode (ATM) Cell. (C/BA) 1393-1999

(3) The data associated with a service primitive. (SCC32) 1455-1999

(4) Information delivered as a unit between adjacent entities that may also contain a PDU of the upper layer. (C/LM) 8802-5-1998

service date (power system measurement) The date a unit first enters the active state. On this date the reporting of performance data shall begin. *Note:* The service date is not to be confused with the installation date (the date the unit was first electrically connected to the system) or with the commercial operation date (usually related to the satisfactory completion of acceptance tests as specified in the purchase contract). (PE/PSE) 762-1980s

service delay In data communications, the time that elapses from the release of a message by an originator to its receipt by the addressee. (C) 610.7-1995

service discovery The function of providing transport clients with the ability to dynamically query service availability within a peer transport entity. (C/MM) 1284.4-2000

service drop (1) The overhead conductors between the electric supply or communication line and the building or structure being served. (NESC) C2-1997

(2) The overhead service conductors from the last pole or other aerial support to and including the splices, if any, connecting to the service-entrance conductors at the building or other structure. (NEC) [86]

service-entrance cable A single conductor or multiconductor assembly provided with or without an overall covering, primarily used for services and of the following types:

(a) Type SE, having a flame-retardant, moisture-resistant covering, but not required to have inherent protection against mechanical abuse.

(b) Type USE, recognized for underground use, having a moisture-resistant covering, but not required to have a flame-retardant covering or inherent protection against mechanical abuse. Single-conductor cables having an insulation specifically approved for the purpose do not require an outer covering. Cabled single-conductor Type USE constructions recognized for underground use may have a bare copper conductor cabled with the assembly. Type USE single, parallel, or cabled conductor assemblies recognized for underground use may have a bare copper concentric conductor applied. These constructions do not require an outer overall covering.

(c) If Type SE or USE cable consists of two or more conductors, one shall be permitted to be uninsulated.

(NESC/NEC) [86]

service entrance conductors (1) (electric systems) (overhead system) The service conductors between the terminals of the service equipment and a point usually outside the building, clear of building walls, where joined by tap or splice to the service drop. (NESC) [86]

(2) (underground system) The service conductors between the terminals of the service equipment and the point of connection to the service lateral. *Note:* Where service equipment is located outside the building walls, there may be no service-entrance conductors, or they may be entirely outside the building. (NESC/T&D/PE) [10], [86]

service environment (diesel-generator unit) The aggregate of conditions surrounding the diesel-generator unit in its enclosure, while serving the design load during normal, accident, and post-accident operation. (PE/NP) 387-1995, 387-1984s

service equipment The necessary equipment, usually consisting of a circuit breaker or switch and fuses, and their accessories, located near the point of entrance of supply conductors to a building or other structure, or an otherwise defined area, and intended to constitute the main control and means of cutoff of the supply. (NESC/NEC) [86]

service evaluation (telephone switching systems) Determination of the quality of service received by the customer. (COM) 312-1977w

service factor (general-purpose alternating-current motor) A multiplier that, when applied to the rated power, indicates a permissible power loading that may be carried under the conditions specified for the service factor. *See also:* asynchronous machine. (PE/NP) [9], 741-1997

service ground A ground connection to a service equipment or service conductor or both. *See also:* ground. (T&D/PE) [10]

service hours (power system measurement) (electric generating unit reliability, availability, and productivity) The number of hours a unit was in the in-service state. (PE/EDPG) [3]

service interface The interface as realized, for the benefit of the clients, by the service as a whole. (C/PA) 1328-1993w, 1224.1-1993w, 1327-1993w, 1224-1993w

service laboratory A laboratory, either internal to an agency (company) or commercially contracted, which performs necessary measurements for the purpose of providing analytic results exclusive of the purpose of monitoring or testing. The term "service laboratory" is synonymous with "proving laboratory." (NI) N42.23-1995

service lateral The underground service conductors between the pedestal, including any risers at a pole or other structure or transformers, and the first point of connection to the service-entrance conductors in a terminal box or meter or other enclosure with adequate space, inside or outside the building wall. Where there is no terminal box, meter, or other enclosure with adequate space, the point of connection shall be considered to be the point of entrance of the service conductors into the building. (NESC/NEC) [86]

service life (1) (primary cell or battery) The period of useful service before its working voltage falls to a specified cutoff voltage. (EEC/PE) [119]

(2) (storage cell or battery) The period of useful service under specified conditions, usually expressed as the period elapsed before the ampere-hour capacity has fallen to a specified percentage of the rated capacity. *See also:* battery; charge. (EEC/PE) [119]

(3) The actual period from initial operation to retirement of a system, structure, or component. (PE/NP) 1205-1993

service life capacity Minimum battery capacity needed to meet design requirements, including temperature correction but excluding margin. (PE/EDPG) 1106-1987s

service life of cable (cable systems) The time during which satisfactory cable performance can be expected for a specific set of service conditions. (PE/SUB/EDPG) 422-1986w, 525-1992r

service order process time A command to a switching system to install, remove, or rearrange trunking, routing, or a customer's service. The time required for input of a service order and its implementation in the switch under specified traffic conditions may be defined separately for manual or computer-generated input. (COM/TA) 973-1990w

service period (illuminating engineering) The number of hours per day for which the daylighting provides a specified illuminance level. It often is stated as a monthly average. (EEC/IE) [126]

service pipe The pipe or conduit that contains underground service conductors and extends from the junction with outside supply wires into the customer's premises. *See also:* service; distributor duct. (T&D/PE) [10]

service-point The point of connection between the facilities of the serving utility and the premises' wiring. *Note:* For clearances of conductors of over 600 V, see the National Electrical Safety Code. (NESC/NEC) [86]

service pole *See:* structure.

service primitive (1) A specific service provided by a particular protocol layer entity. (C/MM) 1394-1995

(2) An abstract, implementation-independent interaction between a service user and the service provider. *Synonym:* primitive. (LM/C) 8802-6-1994

(3) A function in the external interface of a kernel element (KE) that may be invoked to access services provided by the KE. (SCC32) 1455-1999

service provider An implementation of the ACSE and Presentation Layer protocols, to which the APS API provides access. (C/PA) 1351-1994w

service raceway The raceway that encloses the service-entrance conductors. (NESC/NEC) [86]

service rating (rectifier transformer) The maximum constant load that, after a transformer has carried its continuous rated load until there is no further measurable increase in temperature rise, may be applied for a specified time without injury. *See also:* rectifier transformer. (Std100) C57.18-1964w

service recovery Actions or strategies that restore the service capabilities of a switching system from detected troubles, both internal and external to the switching system, in order to protect service with minimal impact on customers, consistent with reliability and service objectives. (COM/TA) 973-1990w

service request A solicitation of services from a client to a server. A service request may entail the exchange of any number of messages between the client and the server. In this amendment, the term *request* denotes a service request. When naming specific types of requests, the term *request* is qualified

Exhibit F-6

NEC® 2002

NATIONAL ELECTRICAL CODE

HANDBOOK

Mark W. Earley

Joseph V. Sheehan

Jeffrey S. Sargent

John M. Caloggero

Timothy M. Croushore

NFPA

The definition of *plenum* in the *Code* is essentially the same as the definition of *plenum* in NFPA 90A, *Standard for the Installation of Air-Conditioning and Ventilating Systems*. For information on wiring methods permitted within plenums, see 300.22(B).

The definition of *plenum* is not intended to apply to the space above a suspended ceiling that is used for environmental air referred to in 300.22(C).

The air-handling space under a computer room floor has special requirements. See Article 645.

Power Outlet. An enclosed assembly that may include receptacles, circuit breakers, fuseholders, fused switches, buses, and watt-hour meter mounting means; intended to supply and control power to mobile homes, recreational vehicles, park trailers, or boats or to serve as a means for distributing power required to operate mobile or temporarily installed equipment.

Premises Wiring (System). That interior and exterior wiring, including power, lighting, control, and signal circuit wiring together with all their associated hardware, fittings, and wiring devices, both permanently and temporarily installed, that extends from the service point or source of power, such as a battery, a solar photovoltaic system, or a generator, transformer, or converter windings, to the outlet(s). Such wiring does not include wiring internal to appliances, luminaires (fixtures), motors, controllers, motor control centers, and similar equipment.

Qualified Person. One who has skills and knowledge related to the construction and operation of the electrical equipment and installations and has received safety training on the hazards involved.

New in the 2002 edition, the definition of the term *qualified person* now includes safety training. No longer is it adequate for an electrical worker to be "familiar with the hazards involved"; the electrical worker of today must also have safety training on the hazards involved.

Raceway. An enclosed channel of metal or nonmetallic materials designed expressly for holding wires, cables, or busbars, with additional functions as permitted in this *Code*. Raceways include, but are not limited to, rigid metal conduit, rigid nonmetallic conduit, intermediate metal conduit, liquidtight flexible conduit, flexible metallic tubing, flexible metal conduit, electrical nonmetallic tubing, electrical metallic tubing, underfloor raceways, cellular concrete floor raceways, cellular metal floor raceways, surface raceways, wireways, and busways.

Cable trays (see Article 392) are not considered raceways in the *NEC*.

Rainproof. Constructed, protected, or treated so as to prevent rain from interfering with the successful operation of the apparatus under specified test conditions.

See the commentary following the definition of *enclosure*.

Raintight. Constructed or protected so that exposure to a beating rain will not result in the entrance of water under specified test conditions.

Raceways on exterior surfaces of buildings are required to be made raintight (see 225.22 and 230.53). For boxes and cabinets, see 300.6. Also see the commentary following the definitions of *wet location*, and *enclosure*.

Receptacle. A receptacle is a contact device installed at the outlet for the connection of an attachment plug. A single receptacle is a single contact device with no other contact device on the same yoke. A multiple receptacle is two or more contact devices on the same yoke.

Exhibit 100.9 shows one single and two multiple receptacles.

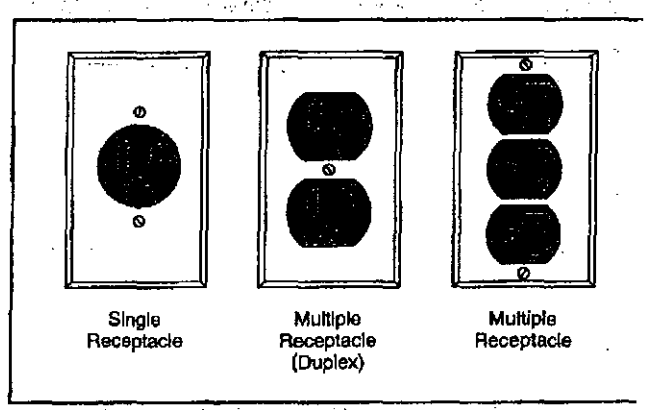

Exhibit 100.9 Receptacles.

Receptacle Outlet. An outlet where one or more receptacles are installed.

See Exhibit 100.9 and the commentary following 220.3(B)(9).

Remote-Control Circuit. Any electric circuit that controls any other circuit through a relay or an equivalent device.

Exhibit 100.10 illustrates a remote-control circuit that starts and stops an electric motor.

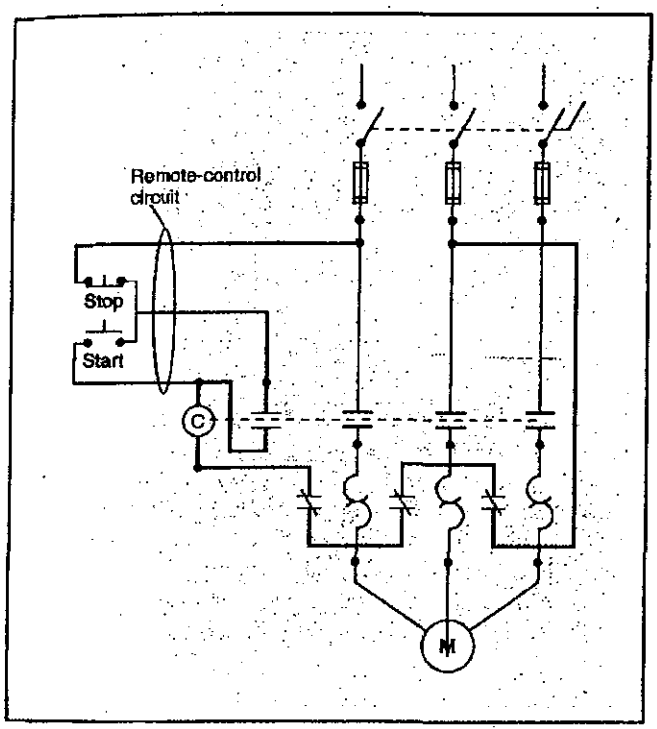

Exhibit 100.10 Remote-control circuit for starting and stopping an electric motor.

Sealable Equipment. Equipment enclosed in a case or cabinet that is provided with a means of sealing or locking so that live parts cannot be made accessible without opening the enclosure. The equipment may or may not be operable without opening the enclosure.

Separately Derived System. A premises wiring system whose power is derived from a battery, from a solar photovoltaic system, or from a generator, transformer, or converter windings, and that has no direct electrical connection, including a solidly connected grounded circuit conductor, to supply conductors originating in another system.

Service. The conductors and equipment for delivering electric energy from the serving utility to the wiring system of the premises served.

The definition of *service* was modified for the 1999 *Code* to state that electric energy to a service can be supplied only by the serving utility. If electric energy is supplied by other than the serving utility, the supplied conductors and equipment are considered feeders, not a service.

Service Cable. Service conductors made up in the form of a cable.

Service Conductors. The conductors from the service point to the service disconnecting means.

The definition of *service conductors* was revised in the 1999 *Code* to be more precise. The phrase "or other source of power" was deleted. The service conductors originate at the service point (where the serving utility ends) and end at the service disconnect. Due to the associated 1999 *Code* change in the definition of *service,* these service conductors may originate only from the serving utility.

Service conductors is a broad term and may include service drops, service laterals, and service-entrance conductors. But this term specifically excludes any wiring on the supply side (serving utility side) of the service point.

If the utility has specified that the service point is at the utility pole, then the service conductors from an overhead distribution system originate at the utility pole and terminate at the service disconnecting means.

If the utility has specified that the service point is at the utility manhole, then the service conductors from an underground distribution system originate at the utility manhole and terminate at the service disconnecting means. Where utility-owned primary conductors are extended to outdoor pad-mounted transformers on private property, the service conductors originate at the secondary connections of the transformers only if the utility has specified that the service point is at the secondary connections.

See Article 230, Part VIII, and the commentary following 230.200 for service conductors exceeding 600 volts, nominal.

Service Drop. The overhead service conductors from the last pole or other aerial support to and including the splices, if any, connecting to the service-entrance conductors at the building or other structure.

In Exhibit 100.11, the overhead service-drop conductors run from the utility pole and connect to the service-entrance conductors at the service point. Conductors on the utility side of the service point are not covered by the *NEC*. The utility specifies the location of the service point. Exact locations of the service point may vary from utility to utility, as well as from occupancy to occupancy.

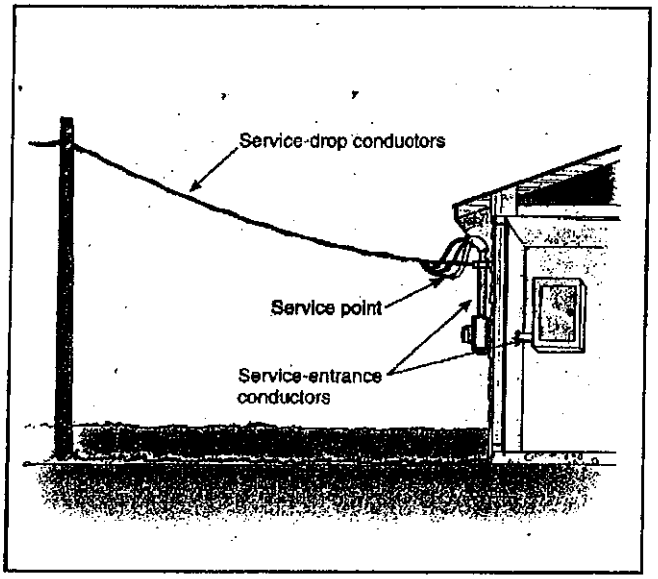

Exhibit 100.11 Overhead system showing a service drop from a utility pole to attachment on a house and service-entrance conductors from point of attachment (spliced to service-drop conductors), down the side of the house, through the meter socket, and terminating in the service equipment.

Service-Entrance Conductors, Overhead System. The service conductors between the terminals of the service equipment and a point usually outside the building, clear of building walls, where joined by tap or splice to the service drop.

See Exhibit 100.11 for an illustration of service-entrance conductors in an overhead system.

Service-Entrance Conductors, Underground System. The service conductors between the terminals of the service equipment and the point of connection to the service lateral.

See Exhibit 100.12 for an illustration of service-entrance conductors in an underground system.

> FPN: Where service equipment is located outside the building walls, there may be no service-entrance conductors, or they may be entirely outside the building.

Service Equipment. The necessary equipment, usually consisting of a circuit breaker(s) or switch(es) and fuse(s) and their accessories, connected to the load end of service conductors to a building or other structure, or an otherwise designated area, and intended to constitute the main control and cutoff of the supply.

The definition of *service equipment* was revised for the 1999 *Code*. In addition to editorial corrections, the phrase "connected to the load end of service conductors" was substituted for the phrase "located near the point of entrance." This change is in concert with the other associated changes made to the definitions of *service* and *service conductors*.

Service equipment may consist of circuit breakers or fused switches provided to disconnect all ungrounded conductors in a building or other structure from the service-entrance conductors.

The disconnecting means at any *one* location is not allowed to consist of more than six circuit breakers or six switches and is required to be readily accessible either outside the building or structure or inside nearest the point of entrance of the service-entrance conductors. See 230.6 and Article 230, Part VI, for service conductors outside the building and service disconnecting means, respectively.

Service Lateral. The underground service conductors between the street main, including any risers at a pole or other structure or from transformers, and the first point of connection to the service-entrance conductors in a terminal box or meter or other enclosure, inside or outside the building wall. Where there is no terminal box, meter, or other enclosure, the point of connection is considered to be the point of entrance of the service conductors into the building.

The definition of *service lateral* was revised for the 1999 *Code*, eliminating the references to adequate space.

As Exhibit 100.12 shows, the underground service laterals may be run from poles or from transformers and with or without terminal boxes, provided they begin at the service point. Conductors on the utility side of the service point are not covered by the *NEC*. The utility specifies the location of the service point. Exact locations of the service point may vary from utility to utility, as well as from occupancy to occupancy.

Service Point. The point of connection between the facilities of the serving utility and the premises wiring.

The service point is the point of demarcation between the serving utility and the premises wiring. The service point is the point on the wiring system where the serving utility ends and the premises wiring begins. The serving utility generally specifies the location of the service point.

Because the location of the service point is generally determined by the utility, the service-drop conductors and the service-lateral conductors may or may not be part of the service as covered by the *NEC*. For these types of conductors

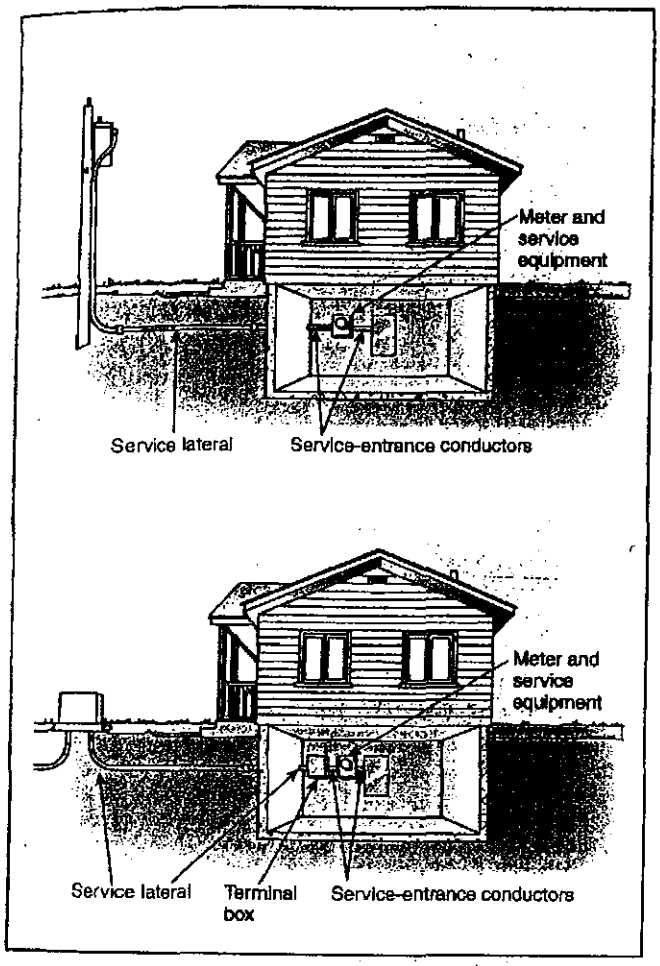

Exhibit 100.12 Underground system's showing service laterals run from a pole and from a transformer.

to be covered, they must be physically located on the premises wiring side of the service point. If these conductors are located on the utility side of the service point, they are not covered in the definition of *service conductors* and are therefore not covered by the *NEC*.

Generally, based on the definitions of the terms *service point* and *service conductors*, any conductor on the serving utility side of the service point is not covered by the *NEC*. For example, a typical suburban residence has an overhead service drop from the utility pole to the house. If the utility specifies that the service point is at the point of attachment of the service drop to the house, then the service-drop conductors are not considered service conductors because the service drop is not on the premises wiring side of the service point. Alternatively, if the service point is specified as "at the pole" by the utility, then the service-drop conductors are considered service conductors, and the *NEC* would apply to the service drop.

Exact locations for a service point may vary from utility to utility, as well as from occupancy to occupancy.

Show Window. Any window used or designed to be used for the display of goods or advertising material, whether it is fully or partly enclosed or entirely open at the rear and whether or not it has a platform raised higher than the street floor level.

See 220.3(B)(7), 220.12(A), and Exhibit 220.1 for show-window lighting load requirements.

Signaling Circuit. Any electric circuit that energizes signaling equipment.

Solar Photovoltaic System. The total components and subsystems that, in combination, convert solar energy into electrical energy suitable for connection to a utilization load.

See Article 690 for solar photovoltaic system requirements.

Special Permission. The written consent of the authority having jurisdiction.

The authority having jurisdiction for enforcement of the *Code* is responsible for making interpretations and granting special permission contemplated in a number of the rules, as stated in 90.4. For specific examples of special permission, see 110.26(A)(1)(b), 230.2(B), and 426.14.

Structure. That which is built or constructed.

Added for the 2002 *Code*, this definition allows the architect, electrical engineer, general contractor, electrical contractor, and all building officials to use the same definition for *structure*.

Switch, Bypass Isolation. A manually operated device used in conjunction with a transfer switch to provide a means of directly connecting load conductors to a power source and of disconnecting the transfer switch.

See 700.6(B) and 701.7(B) for further information on bypass isolation transfer switches.

Switch, General-Use. A switch intended for use in general distribution and branch circuits. It is rated in amperes, and

1 STATE OF ILLINOIS

ILLINOIS COMMERCE COMMISSION

2

3

4

5

TRI-COUNTY ELECTRIC COOPERATIVE, INC.

6 vs.

ILLINOIS POWER COMPANY D/B/A AMEREN IP

7

8 Cause No. 05-0767

9

10

11

12 DISCOVERY DEPOSITION OF KEITH MALMEDAL, PHD., P.E.

TAKEN ON BEHALF OF THE COMPLAINANT

13 DECEMBER 2, 2009

14

15

16

17

18

19

20

21

22

23

24

25

1 STATE OF ILLINOIS
ILLINOIS COMMERCE COMMISSION
2
TRI-COUNTY ELECTRIC)
3 COOPERATIVE, INC.,)
)
4 Complainant,)
) Case No. 05-0767
5 vs.)
)
6 ILLINOIS POWER COMPANY)
D/B/A AMEREN IP,)
7)
Respondent.)
8)
9
10 DISCOVERY DEPOSITION OF KEITH MALMEDAL,
11 PHD., P.E., produced, sworn and examined on December
12 2, 2009, between the hours of eight o'clock in the
13 forenoon and six o'clock in the afternoon of that day,
14 at the offices of Tri-County Electric Cooperative,
15 Inc., 3906 West Broadway, Mount Vernon, Ilinois,
16 62864, before Jenna L. Higgins, a Certified Court
17 Reporter (MO), Certified Shorthand Reporter (IL), and
18 a Notary Public within and for the State of Illinois,
19 in a certain cause now pending with the State of
20 Illinois, Illinois Commerce Commission, between
21 TRI-COUNTY ELECTRIC COOPERATIVE, INC., Complainant,
22 vs. ILLINOIS POWER COMPANY D/B/A AMEREN IP,
23 Respondent; on behalf of the Complainant.
24
25

1 IT IS HEREBY STIPULATED AND AGREED by and
2 between counsel for the Complainant and counsel for
3 the Respondent that this deposition may be taken in
4 shorthand by Jenna L. Higgins, a Certified Court
5 Reporter (MO), Certified Shorthand Reporter (IL), and
6 Notary Public, and afterwards transcribed into
7 typewriting; and the signature of the witness is
8 expressly reserved.
9 * * * * *
10 KEITH MALMEDAL, PHD., P.E.,
11 of lawful age, produced, sworn and examined on behalf
12 of the Complainant, deposes and says:
13 EXAMINATION
14 QUESTIONS BY MR. TICE:
15 **Q. I will tell you what. You have got your**
16 **report. Just give that to the court reporter because**
17 **you have yours already. Would you state your name,**
18 **please?**
19 A. Keith Malmedal.
20 **Q. Spell that for me, please.**
21 A. K-e-i-t-h M-a-l-m-e-d-a-l.
22 **Q. Have you -- where are you from,**
23 **Mr. Malmedal?**
24 A. Denver, Colorado.
25 **Q. Okay. And your age?**

1 **as well as physical facilities, correct?**
2 A. Yes.
3 **Q. Weight of equipment and so forth?**
4 A. Yes. It would be expensive and --
5 **Q. Okay. And they'd have to do that even**
6 **though Citation didn't require any additional power;**
7 **is that correct?**
8 A. If there are other customers that needed
9 the power?
10 **Q. Yes.**
11 A. Yes. They would have to do that.
12 **Q. Okay. Now, Robert Dew in his report in his**
13 **testimony has referred to the fact that IP has made a**
14 **number of modifications to the Texas substation over**
15 **the years from 1965 on up including new transformers,**
16 **larger transformers. You read his report?**
17 A. Yes. From 1952 on up.
18 **Q. Pardon?**
19 A. 1952 was the first instance he referred to.
20 **Q. Yeah. And did you investigate any of those**
21 **assertions by Robert Dew that, in fact, these changes,**
22 **these modifications, had, in fact, been made to the**
23 **Texas substation, physically made to the Texas**
24 **substation?**
25 A. Other than -- no. I didn't investigate,

1 but I have no reason to believe they weren't done.

2 **Q. Okay. And do you have any reason to**

3 **believe that those modifications had an effect upon**

4 **the increased capacity to serve load out of that Texas**

5 **substation?**

6 A. They very likely did, yes. Some of them

7 did.

8 **Q. Now, also, the Texas substation is a three**

9 **phase substation, isn't it?**

10 A. Yes.

11 **Q. I mean -- and what does that mean? Tell**

12 **me.**

13 A. It means there are three phases of voltage

14 that are going in and out of it.

15 **Q. Coming in on the high side and going out on**

16 **the low side, is that correct?**

17 A. Yes.

18 **Q. So every circuit coming out of that**

19 **substation on the low side is a three phase circuit,**

20 **isn't it?**

21 A. Yes. At least where it attaches to the

22 substation.

23 **Q. And, well, it is a three phase circuit**

24 **going to the Citation connection, isn't it?**

25 A. It is, yes.

1 CERTIFICATE OF REPORTER

2

3 I, JENNA L. HIGGINS, a Certified Shorthand
4 Reporter (IL), and a Notary Public within and for the
5 State of Illinois, do hereby certify that the witness
6 whose testimony appears in the foregoing deposition
7 was duly sworn by me; that the testimony of said
8 witness was taken by me to the best of my ability and
9 thereafter reduced to typewriting under my direction;
10 that I am neither counsel for, related to, nor
11 employed by any of the parties to the action in which
12 this deposition was taken, and further that I am not a
13 relative or employee of any attorney or counsel
14 employed by the parties thereto, nor financially or
15 otherwise interested in the outcome of the action.

16

17 Jenna L. Higgins

18 Notary Public within and for
19 the State of Illinois
20 IL CSR #084-004398

21

22 OFFICIAL SEAL
JENNA L HIGGINS
23 NOTARY PUBLIC - STATE OF ILLINOIS
MY COMMISSION EXPIRES:01/27/13

24

25

1 STATE OF)
)
2 COUNTY OF)
3
I, KEITH MALMEDAL, PHD., P.E., do hereby certify:
4 That I have read the foregoing deposition;
That I have made such changes in form and/or
5 substance to the within deposition as might be
necessary to render the same true and correct;
6 That having made such changes thereon, I hereby
subscribe my name to the deposition.
7 I declare under penalty of perjury that the
foregoing is true and correct.
8
9
KEITH MALMEDAL, PHD., P.E.
10
11 Executed this 28th day of December,
12 2009, at 5191 WARD Rodd Unit 1 Westbridge
13 Colorado
14
15 Notary Public: Rosa M. Gardine
16 My Commission Expires: 1/10/13
17
18 Signature page to: Matthew Frey
19
20 Jh/KEITH MALMEDAL, PHD., P.E., 12/02/2009
21
22 TRI-COUNTY ELECTRIC COOPERATIVE, INC. Vs. ILLINOIS
POWER COMPANY D/B/A AMEREN IP
23
24
25

ROSA M. GARDINE NOTARY PUBLIC STATE OF COLORADO
My Commission Expires 1/10/13

Personal and Confidential

July 8, 2005

Mr. Todd Masten
Regulatory Specialist, Ameren IP

Mr. Masten,

This letter is being written to explain Citation's plan to utilize Ameren IP power, via an existing primary line, that is owned by the Salem Unit interest owners, and currently exists in Tri County Electric Coop territory, to power equipment in the Salem Unit.

Citation Oil and Gas Corp. acquired the operation of the Salem Waterflood Unit in December 1998 from Texaco Exploration and Production Company. This unit stretches seven miles in length from Section 16, T2N, R2E, to Section 17, T1N, R2E in Marion County, Illinois. Currently the Salem Unit utilizes a peak load of 5,800 KW with an average use of ~ 3.7 MKWH. The voltage Ameren IP supplies to Citation is 69 KV and is stepped down to 12.47 KV prior to being distributed through the Salem Unit via four separate primary circuits. The primary circuits are owned by the interest owners of the Salem Unit. A total of 296 wells producing via artificial lift, injection pumps that inject produced water into 61 injection wells, and two oil and water separation facilities (north battery and south battery) are powered by Ameren IP via the four separate circuits which exist to a large extent in Tri County's territory. Ameren IP is the only electrical supplier to the Salem Unit.

Citation is constructing a gas plant to be located adjacent to the South battery in the northwest quarter of section 6, T1N, R2E. The gas plant will receive gas from the 296 producing wells that are currently powered by Ameren IP. Eight separate compressors will be set throughout the field to pull the gas from the producing wells and deliver the field gas to the gas plant. The gas plant will extract hydrogen sulfide and then extract liquids (to be sold as liquid natural gas) from the field gas. It is critical to the operation of the gas plant to be interconnected with the same circuits that power the producing wells. If the gas plant operated on Tri County's power and Tri County lost power the field gas would flare to atmosphere (toxic H2S would be released to the atmosphere and a resource would be wasted). On the other hand, if Tri County power stayed on line to the gas plant and Ameren IP lost power and the field gas supply was interrupted, equipment at the gas plant would potentially over heat and be damaged. The safest, most economic, and efficient way to operate the gas plant would be to interconnect the gas plant with the power supplied to the producing wells. If a power interruption occurs to the producing wells, the plant can be taken off line with the controls that are currently in place.

The gas plant will have 800 KW of connected horsepower with an initial average operating load of 580 KW. The eight field compressors will have 600 KW of connected load and an average initial load of ~ 500 KW. This load will be intended to operate at all times and will carry a load factor similar to the load factor of the existing operations. The initial loads of the gas processing equipment will more than likely increase over time as wells are reactivated, recompleted, or new wells are drilled.

A primary circuit (the south circuit) currently exists ~ 500' from the location of the gas plant. This circuit feeds power to the South battery which is mentioned above as being adjacent to the gas plant. The South battery, the gas plant, and a large portion of the south circuit currently exist in Tri County territory.

The gas plant shall be an extension of the current operations of the Salem Unit. This plant is being installed to capture and exploit a resource that is currently being produced within the Salem Unit. The processing of the field gas will prevent waste of a resource, improve the environment and generate income to the interest owners, community, vendors and to the State of Illinois.

As outlined above, there is no option but for the load of the gas recovery equipment to be serviced by Ameren IP through the existing primary circuits in the Salem Unit. A precedent would be set if Ameren IP agrees with Tri County Electric Coop on this issue. As a responsible operator of the Salem Unit, additional load will be added in order to efficiently exploit the oil and gas reserves. New wells will be drilled and existing wells will be activated as the waterflood pushes oil and gas to new areas. A majority of the Salem Unit is located in Tri County territory and the majority of the additional load needed to continue operations of the Unit would most likely fall in Tri County territory. In Citation's opinion, a precedent has been set by Ameren IP, whereas all load associated with the operation of the Salem Unit is serviced by one supplier. Since capital was invested by the Salem Unit interest owners to construct primary distribution prior to any territorial agreement, any additional loads, no matter which territory the load exists, should be grandfathered to the company supplying power to the existing loads of the Salem Unit. Otherwise, it would be unfair to interest owners for the capital stranded in the construction of the primary distribution to be lost.

Sincerely,

Jeff Lewis
Southern Oklahoma Region Engineer

EXHIBIT A-6

Citation

General Purpose Worksheet

SUBJECT: Salem Unit Line Distribution

FILE: BY: DATE:

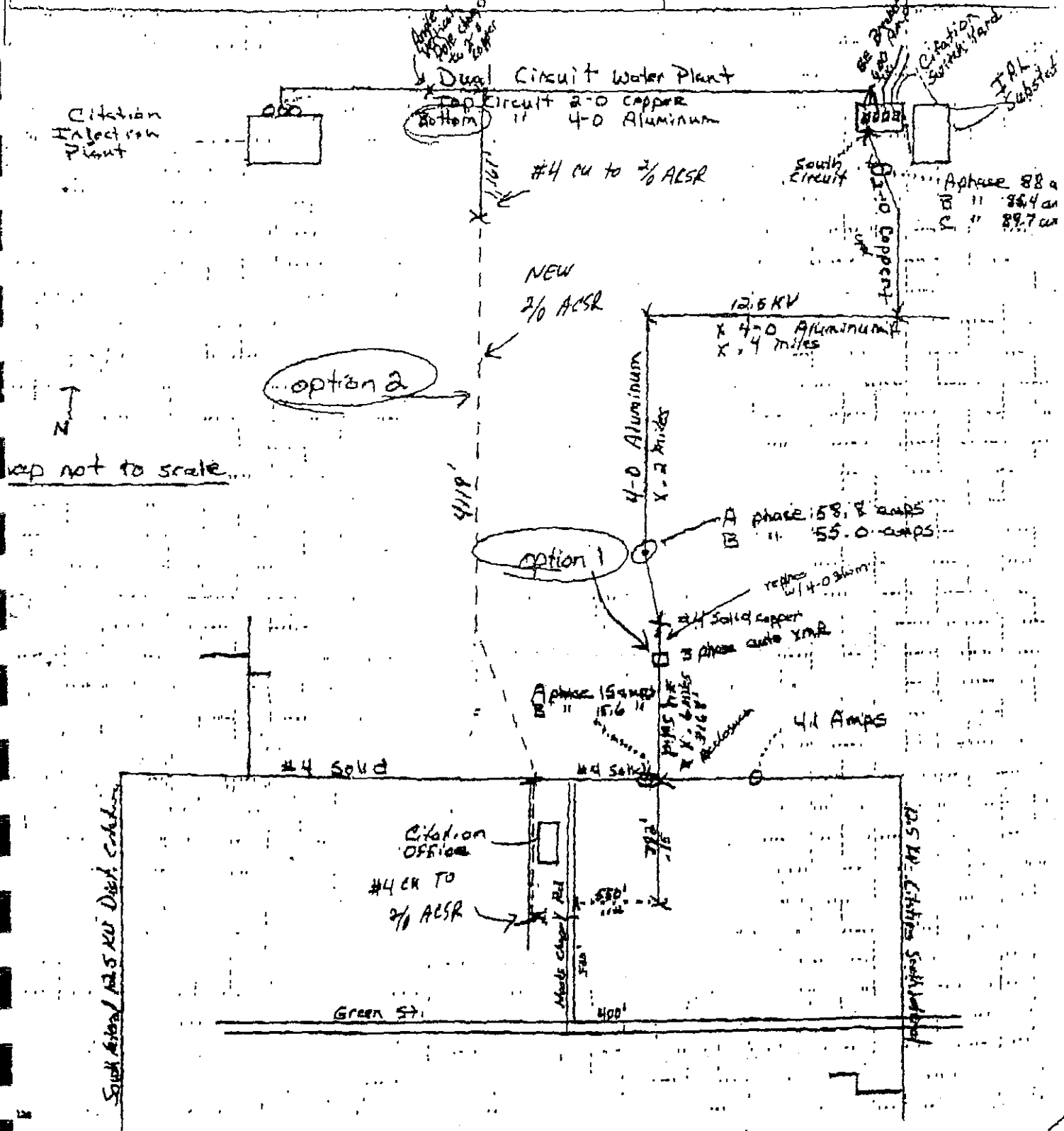

PROOF OF SERVICE

I, JERRY TICE, hereby certify that on the 27th day of January, 2010, I deposited in the United States mail at the post office at Petersburg, Illinois, postage fully paid, a copy of the Prepared Rebuttal Testimony of Robert C. Dew, Jr. P.E. in Support of Tri-County Electric Cooperative, Inc. and attached hereto, addressed to the following persons at the addresses set opposite their names:

Mr. Scott C. Helmholz
Bailey & Glasser LLP's
Suite 520
One North Old State Capitol Plaza
Springfield, IL 62701
Shelmholz@baileyglasser.com

Larry Jones
Administrative Law Judge
Illinois Commerce Commission
527 East Capitol Avenue
Springfield, IL 62701
ljones@icc.illinois.gov

Jerry Tice

Jerry Tice