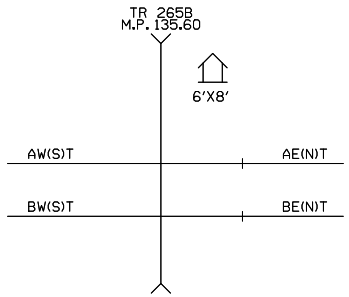

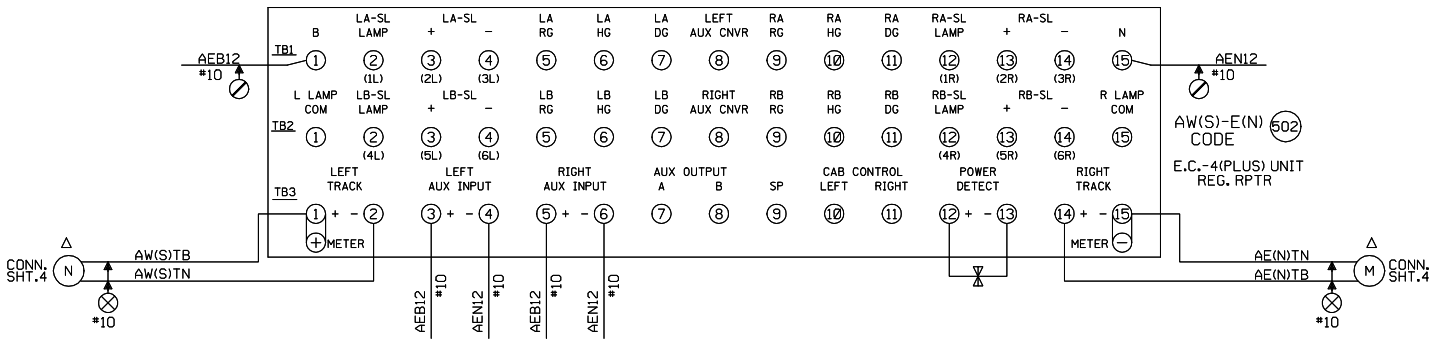

NOTES:

⊘ = OBSERVE CORRECT POLARITY EQUIPMENT WILL BE DAMAGED IF CONNECTIONS ARE REVERSED.

⊗ = TWISTED WIRES.

ALL WIRING TO TRACK 2C.NO.6 U.G.B.T. CABLE

ALL HOUSE WIRING TO BE NO.16 UNLESS OTHERWISE SPECIFIED

REFER TO STANDARDS DRAWING FOR HOUSE GROUNDING SCHEME.

ALL GROUND CONNECTIONS TO BE #6 OR LARGER, SIGNAL WIRING SHOP TO RUN ALL GROUND CONNECTIONS.

ENSURE TRACK POLARITY IS TRANSPOSED ACROSS ALL INSULATED JOINTS.

⧗ = TEST TERMINALS MUST BE INSTALLED ON ALL WIRING CONNECTED TO EXTERNAL CABLES (EXCEPT TRACK AND A.C. POWER WIRES).

△ FIELD ENSURE PROPER TRACK POLARITY AND "AC" ACCORDINGLY

NEW SHEET
VILLA GROVE SUBDIVISION
REGENERATIVE REPEATER
M.P. 135.60
6'X8' HOUSE

1 11-15-06 INSTALL FLS/GATES & CONSTANT WARNING AT TR 265B M.P. 135.60 A.F.E. 59237 JJL / /CTC/RDD	

MODIFICATION LEVEL	
Q.A. LAST LEVEL CHK'D.	CY
LAST LEVEL MOD. THIS TYP.	CQ
LAST LEVEL BY DESIGNER.	DP
CHANGED FROM TYP.? Y/N	Y

UNION PACIFIC
QUALITY PRODUCTIVITY SAFETY
SIGNAL DESIGN

DES:	CTC
DIG:	CTC
CHK:	JJL
A.F.E.	59237
ID= 030113560.7S	

UNION PACIFIC RAILROAD

81ST STREET, ILLINOIS TO
VILLA GROVE, ILLINOIS
C.T.C. CIRCUITS

Office of AVP Engineering - Design Omaha, Nebraska

DATE	11-15-06
SHEET	7
DWG	135.60

S-301

(REV. 4/4/00) (1TE4RGRC.1)

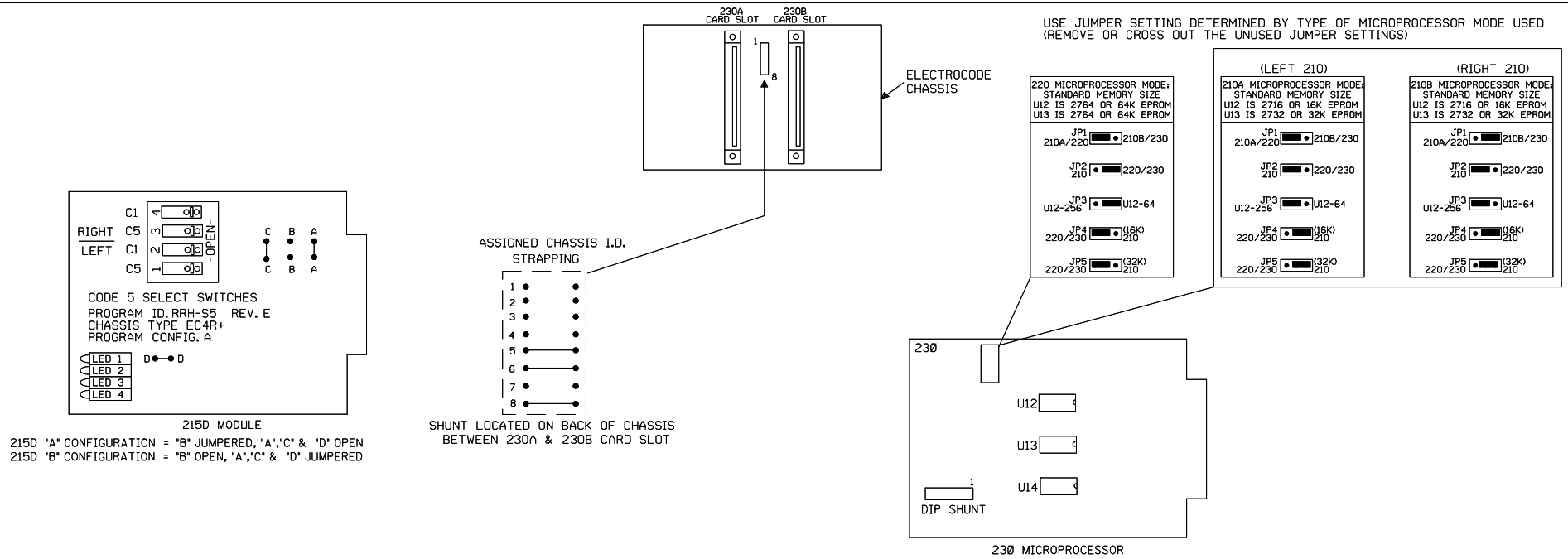

NEW SHEET
VILLA GROVE SUBDIVISION
REGENERATIVE REPEATER
M.P. 135.60
6'X8' HOUSE

					1 11-15-06 INSTALL FLS/GATES & CONSTANT WARNING AT TR 265B M.P. 135.60 A.F.E. 59237 JJL / /CTC/RDD	MODIFICATION LEVEL		UNION PACIFIC QUALITY PRODUCTIVITY SAFETY SIGNAL DESIGN	DES: CTC	UNION PACIFIC RAILROAD	DATE 11-15-06
						Q.A. LAST LEVEL CHK'D.	CY		DIG: CTC	81ST STREET, ILLINOIS TO	SHEET 8
						LAST LEVEL MOD. THIS TYP.	CQ		CHK: JJL	VILLA GROVE, ILLINOIS	DWG 135.60
						LAST LEVEL BY DESIGNER.	DP		A.F.E. 59237	C.T.C. CIRCUITS	S-301
						CHANGED FROM TYP.? Y/N	Y		ID= 030113560.8S	Office of AVP Engineering - Design Omaha, Nebraska	

(REV. 4/4/00) (1TE4RGRC.2)

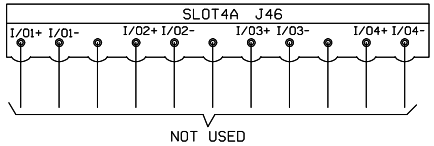

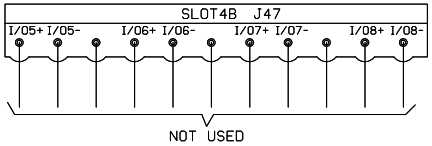

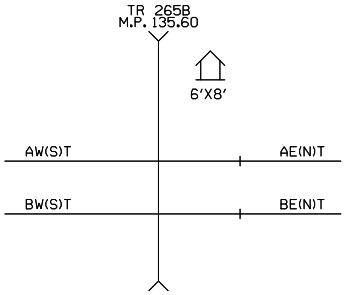

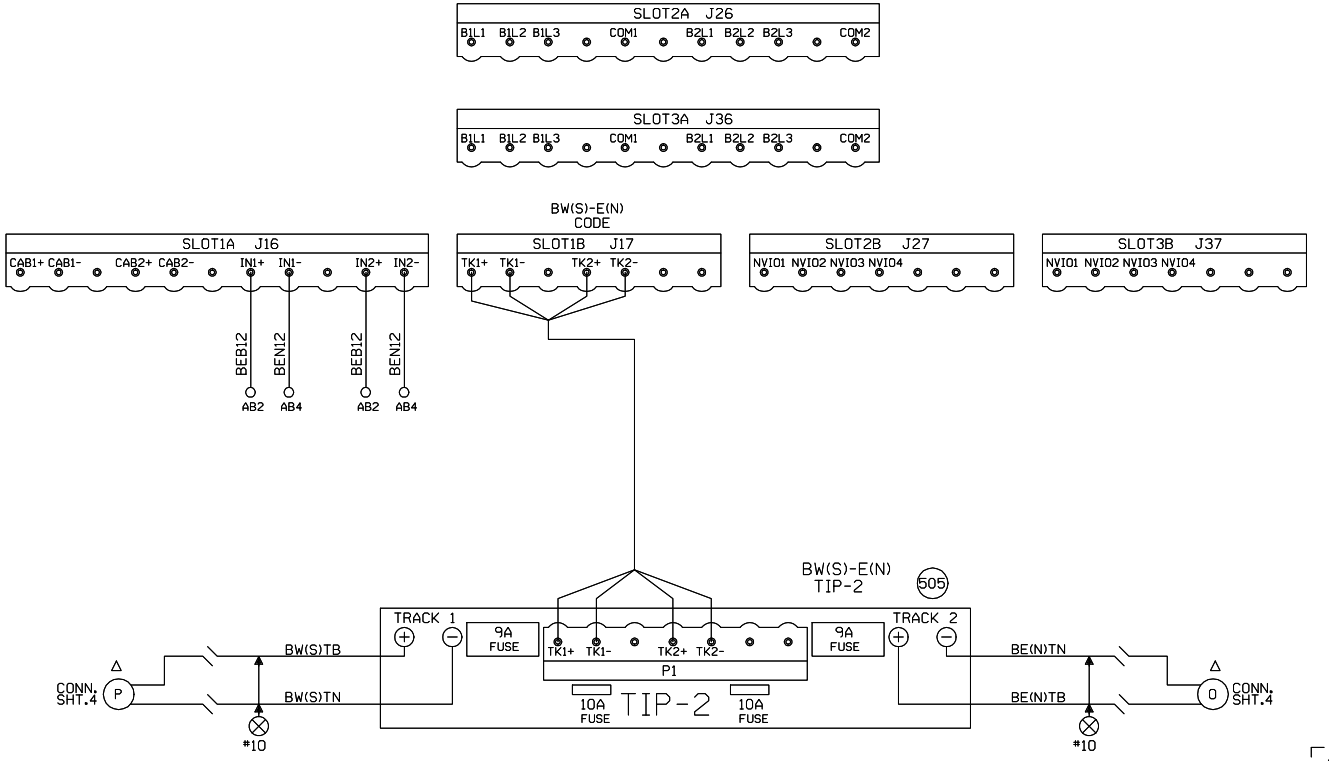

Δ FIELD ENSURE PROPER TRACK POLARITY AND "AC" ACCORDINGLY

= TEMPORARY DISCONNECT & TAPE (TO BE PUT IN-SERVICE ON FUTURE WAYSIDE DESIGN)

NEW SHEET
VILLA GROVE SUBDIVISION
REGENERATIVE REPEATER
M.P. 135.60
6'X8' HOUSE

1 11-15-06	INSTALL FLS/GATES & CONSTANT WARNING AT TR 265B M.P. 135.60 A.F.E. 59237 JJL / /CTC/RDD

MODIFICATION LEVEL	
Q.A. LAST LEVEL CHECKED	DP
LAST LEVEL MOD THIS TYPICAL	DP
LAST LEVEL BY DESIGNER	DP
CHANGED FROM TYPICAL?	Y

REV 02/26/07 1TESINTC.1

UNION PACIFIC
QUALITY PRODUCTIVITY SAFETY
SIGNAL DESIGN

DES:	CTC
DIG:	CTC
CHK:	JJL
A.F.E.	59237
ID= 030113560.9S	

UNION PACIFIC RAILROAD

81ST STREET, ILLINOIS TO
VILLA GROVE, ILLINOIS
C.T.C. CIRCUITS

Office of AVP Engineering - Design Omaha, Nebraska

DATE	11-15-06
SHEET	9
DWG	135.60

S-301

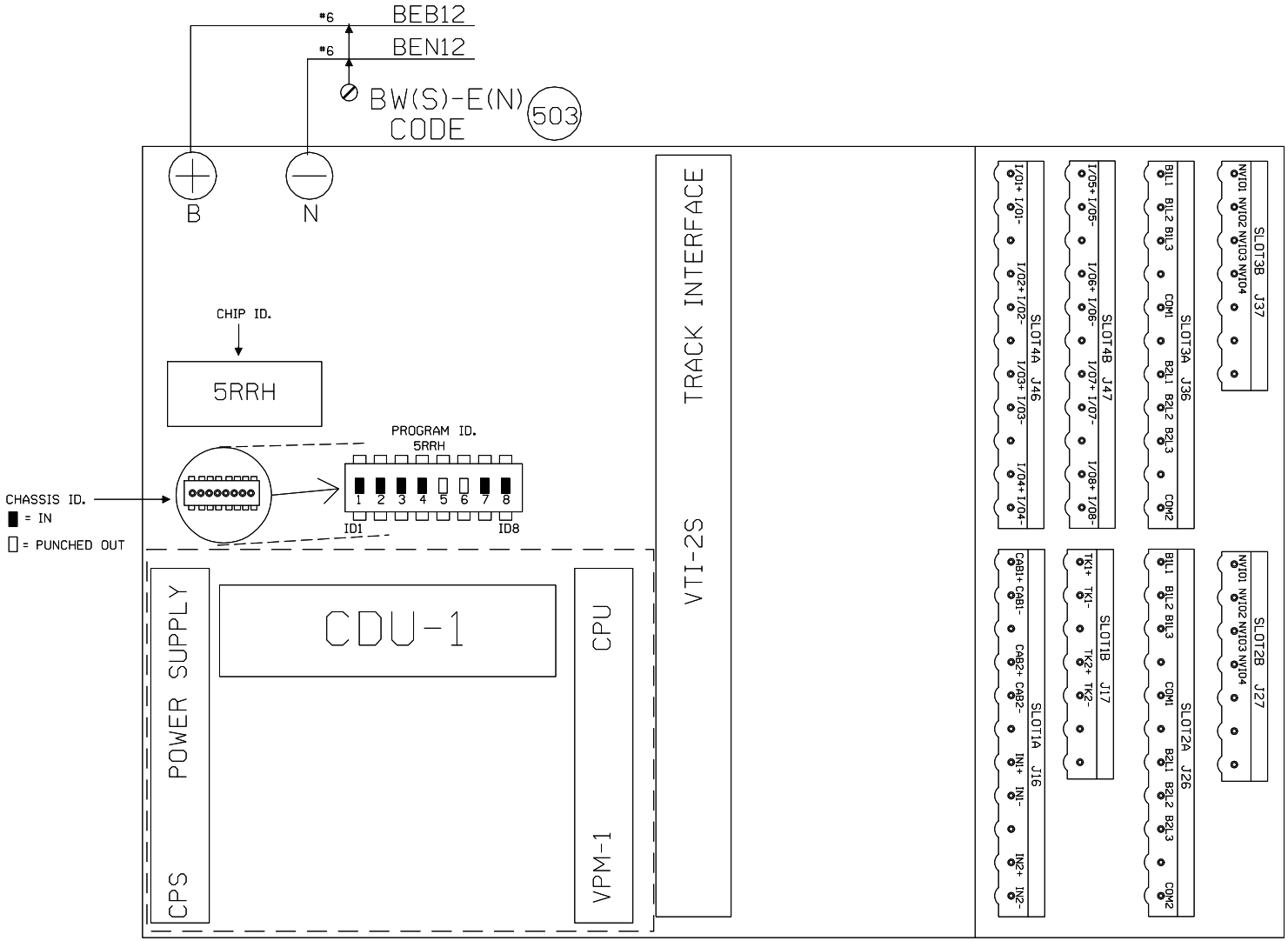

NEW SHEET
VILLA GROVE SUBDIVISION
REGENERATIVE REPEATER
M.P. 135.60
6'X8' HOUSE

					1 11-15-06 INSTALL FLS/GATES & CONSTANT WARNING AT TR 265B M.P. 135.60 A.F.E. 59237 JJL /CTC/RDD	MODIFICATION LEVEL		UNION PACIFIC QUALITY PRODUCTIVITY SAFETY SIGNAL DESIGN	DES: CTC	UNION PACIFIC RAILROAD	DATE 11-15-06
						Q.A. LAST LEVEL CHECKED	DP		DIG: CTC	81ST STREET, ILLINOIS TO	SHEET 10
						LAST LEVEL MOD THIS TYPICAL	DP		CHK: JJL	VILLA GROVE, ILLINOIS	DWG 135.60
						LAST LEVEL BY DESIGNER	DP		A.F.E. 59237	C.T.C. CIRCUITS	S-301
						CHANGED FROM TYPICAL?	Y		ID= 030113560.10S	Office of AVP Engineering - Design Omaha, Nebraska	
						REV 02/26/07 1TE5INTC.3					

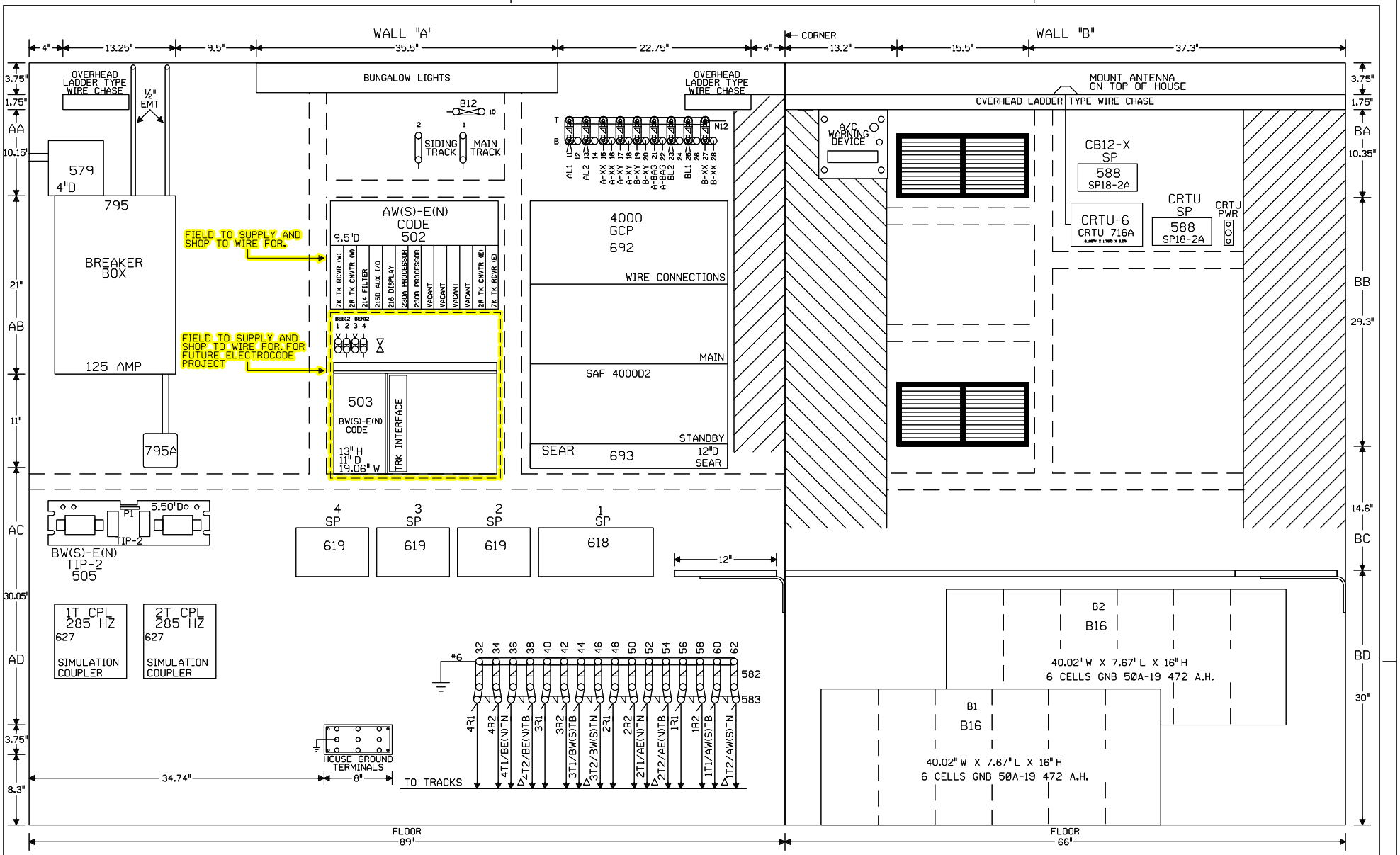

Δ FIELD ENSURE PROPER TRACK POLARITY AND "AC" ACCORDINGLY

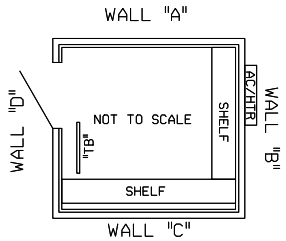

NOTE: ALL DIMENSIONS SHOWN ARE APPROXIMATE.

0 1 2 3 4 FEET

SCALE: 1.5 INCHES = 1 FOOT

NEW SHEET
SIDNEY, ILLINOIS
TR 265B
M.P. 135.60
VILLA GROVE SUBDIVISION
D.O.T.#166 901H

1	11-15-06 INSTALL FLS/GATES & CONSTANT WARNING AT TR 265B M.P. 135.60 A.F.E. 59237 JJL / /CTC/RDD

UNION PACIFIC
QUALITY PRODUCTIVITY SAFETY
SIGNAL DESIGN

DES:	CTC
DIG:	CTC
CHK:	JJL
A.F.E.	59237
ID= 030113560.11X	

UNION PACIFIC RAILROAD

81ST STREET, ILLINOIS TO VILLA GROVE, ILLINOIS
C.T.C. CIRCUITS

Office of AVP Engineering - Design — Omaha, Nebraska

DATE	11-15-06
SHEET	11
DWG	135.60
	S-301

(REV. 01.02.21) (AB6X8HSE.TYP)

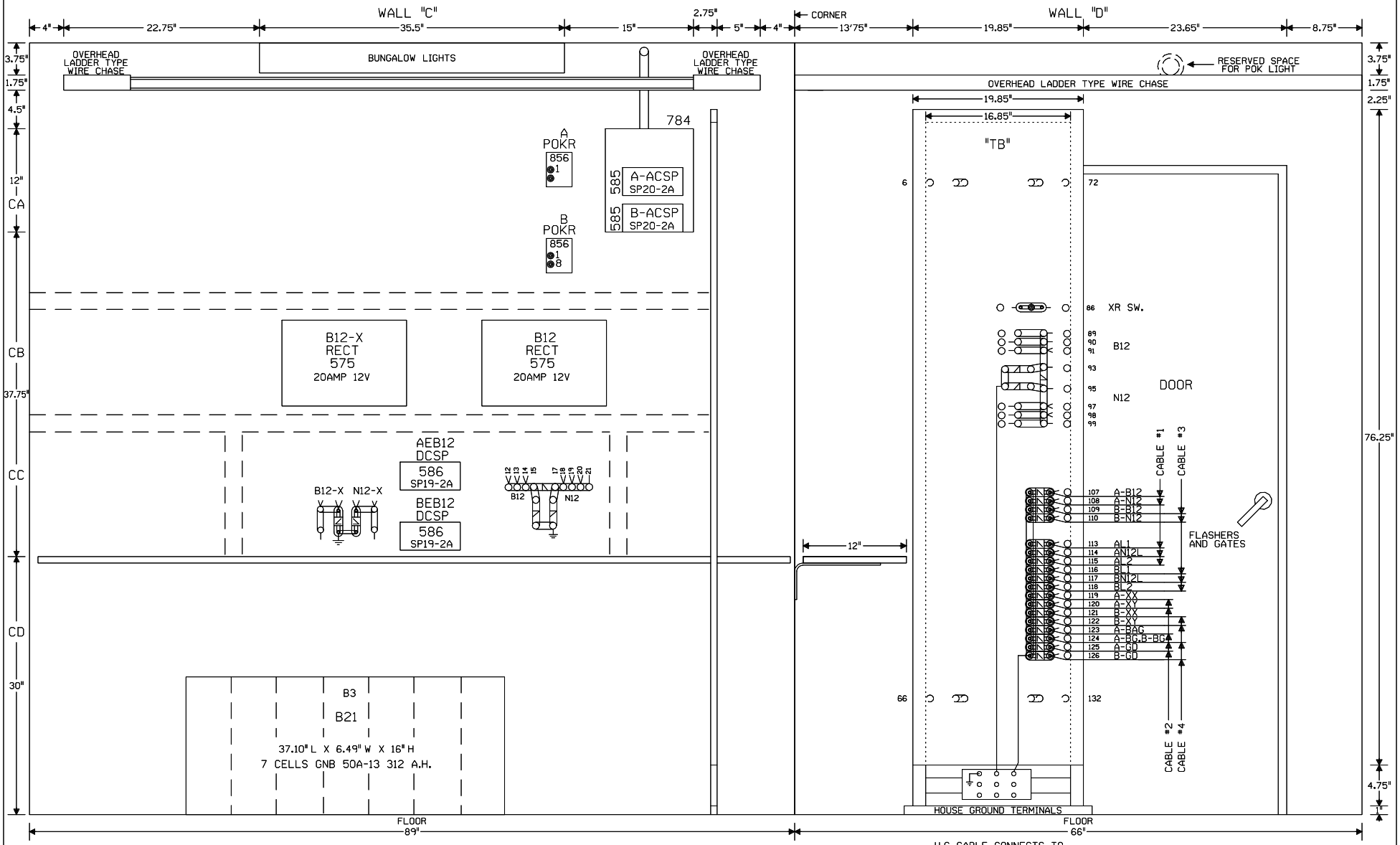

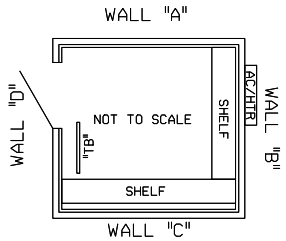

NOTE: ALL DIMENSIONS SHOWN ARE APPROXIMATE.

0 1 2 3 4 FEET

SCALE: 1.5 INCHES = 1 FOOT

NEW SHEET
SIDNEY, ILLINOIS
TR 265B
M.P. 135.60
VILLA GROVE SUBDIVISION
D.O.T.#166 901H

1 11-15-06 INSTALL FLS/GATES & CONSTANT WARNING AT TR 265B M.P. 135.60 A.F.E. 59237 JJL /CTC/RDD	MODIFICATION LEVEL		UNION PACIFIC QUALITY PRODUCTIVITY SAFETY SIGNAL DESIGN	DES: CTC	UNION PACIFIC RAILROAD	DATE 11-15-06
	Q.A. LAST LEVEL CHK'D.	DD		DIG: CTC	81ST STREET, ILLINOIS TO	SHEET 12
	LAST LEVEL MOD. THIS TYP.	DB		CHK: JJL	VILLA GROVE, ILLINOIS	DWG 135.60
	LAST LEVEL BY DESIGNER.	DP		A.F.E. 59237	C.T.C. CIRCUITS	S-301
	CHANGED FROM TYP.? Y/N	Y		ID= 030113560.12X	Office of AVP Engineering - Design Omaha, Nebraska	

(REV. 01.02.21)(CD6X8HSE.TYP)