```
Minimum Program Steps Report
----------------------------

Location and SIN
----------------
DOT Number: 166901H
Milepost Number: 135.60
Site Name: SIDNEY, IL

SIN: 762010010016 *

* Parameter is part of office check number calculation.

MCF and Template Selection
--------------------------
MCF Name: GCP-T6X-01-2.mcf
MCF Revision: 012
MCFCRC: 0DFE7A0C

Template = 1D:3 Uni pairs *

* Parameter is part of office check number calculation.

Minimum Program Steps
---------------------
TEMPLATE:  module configuration
Track 3 Slot = Track *
Track 4 Slot = Track *

TEMPLATE:  track 1-Uni, Island
Track 1 : GCP Frequency = 285 Hz
Track 1 : Approach Distance = 3286 ft See Plans
Track 1 : Prime Warning Time = 27 sec *
Track 1 : GCP Transmit Level = Medium Set in Field
Track 1 : Uni/Bi/Sim-Bidirnl = Sim. Bidirnl *
Track 1 : Isl Frequency = 13.2 kHz
Track 1 : Island Distance = 123 ft Verify in Field

TEMPLATE:  track 2-Uni,No Island
Track 2 : GCP Frequency = 285 Hz
Track 2 : Approach Distance = 3286 ft Verify in Field
Track 2 : Prime Warning Time = 27 sec *
Track 2 : GCP Transmit Level = Medium Set in Field
Track 2 : Uni/Bi/Sim-Bidirnl = Sim. Bidirnl *

TEMPLATE:  track 3-Uni, Island
Track 3 : GCP Frequency = 645 Hz
Track 3 : Approach Distance = 1408 ft See Plans
Track 3 : Prime Warning Time = 27 sec *
Track 3 : GCP Transmit Level = Medium Set in Field
Track 3 : Isl Frequency = 11.5 kHz
Track 3 : Island Distance = 123 ft Verify in Field

TEMPLATE:  track 4-Uni,No Island
Track 4 : GCP Frequency = 645 Hz
Track 4 : Approach Distance = 1408 ft See Plans
Track 4 : Prime Warning Time = 27 sec *
Track 4 : GCP Transmit Level = Medium Set in Field

TEMPLATE:  AND 1 XR
AND 1 Enable Used = Yes *

TEMPLATE:  IP assignment 1
IN 1.2 = Out Of Service IP 1 *
IN 2.2 = Out Of Service IP 2 *

TEMPLATE:  IP assignment SSCC
IN 7.1 = AND 1 XR Enable *

ADVANCED:  out of service
OOS Control = OOS IPs *

ADVANCED:  out of service 2
T2 OOS Control = OOS Input 1 *
T3 OOS Control = OOS Input 2 *
T4 OOS Control = OOS Input 2 *

* Parameter is part of office check number calculation.

Check Numbers
-------------
Office Check Number: 5267AFEF
Config. Check Number: 18602785
(Based on MCF Revision 012)

Parameters not part of office check number calculation:
Track 1 : GCP Frequency = 285 Hz
Track 1 : Approach Distance = 3286 ft See Plans
Track 1 : GCP Transmit Level = Medium Set in Field
Track 1 : Isl Frequency = 13.2 kHz
Track 1 : Island Distance = 123 ft Verify in Field
Track 2 : GCP Frequency = 285 Hz
Track 2 : Approach Distance = 3286 ft Verify in Field
Track 2 : GCP Transmit Level = Medium Set in Field
Track 3 : GCP Frequency = 645 Hz
Track 3 : Approach Distance = 1408 ft See Plans
Track 3 : GCP Transmit Level = Medium Set in Field
Track 3 : Isl Frequency = 11.5 kHz
Track 3 : Island Distance = 123 ft Verify in Field
Track 4 : GCP Frequency = 645 Hz
Track 4 : Approach Distance = 1408 ft See Plans
Track 4 : GCP Transmit Level = Medium Set in Field

Comments
--------
<none>

Configuration Package File
--------------------------
Filename: 030113560 166901H.pac
Path: H:\01-Xing\up06294\GCP Program\
Date/Time:
```

NEW SHEET
SIDNEY, ILLINOIS
TR 265B
M.P. 135.60
VILLA GROVE SUBDIVISION
D.O.T.#166 901H

1 11-15-06
INSTALL FLS/GATES & CONSTANT WARNING
AT TR 265B
M.P. 135.60
A.F.E. 59237
JJL
/ /CTC/RDD

NOTE: Actual OFFSET and ISLAND distances must be entered by field personnel.

UNION PACIFIC
QUALITY PRODUCTIVITY SAFETY
SIGNAL DESIGN

DES:	CTC
DIG:	CTC
CHK:	JJL
A.F.E.	59237
ID= 030113560.3AX	

UNION PACIFIC RAILROAD
81ST STREET, ILLINOIS TO
VILLA GROVE, ILLINOIS
C.T.C. CIRCUITS
Office of AVP Engineering - Design Omaha, Nebraska

DATE	11-15-06
SHEET	3A
DWG	135.60

S-301

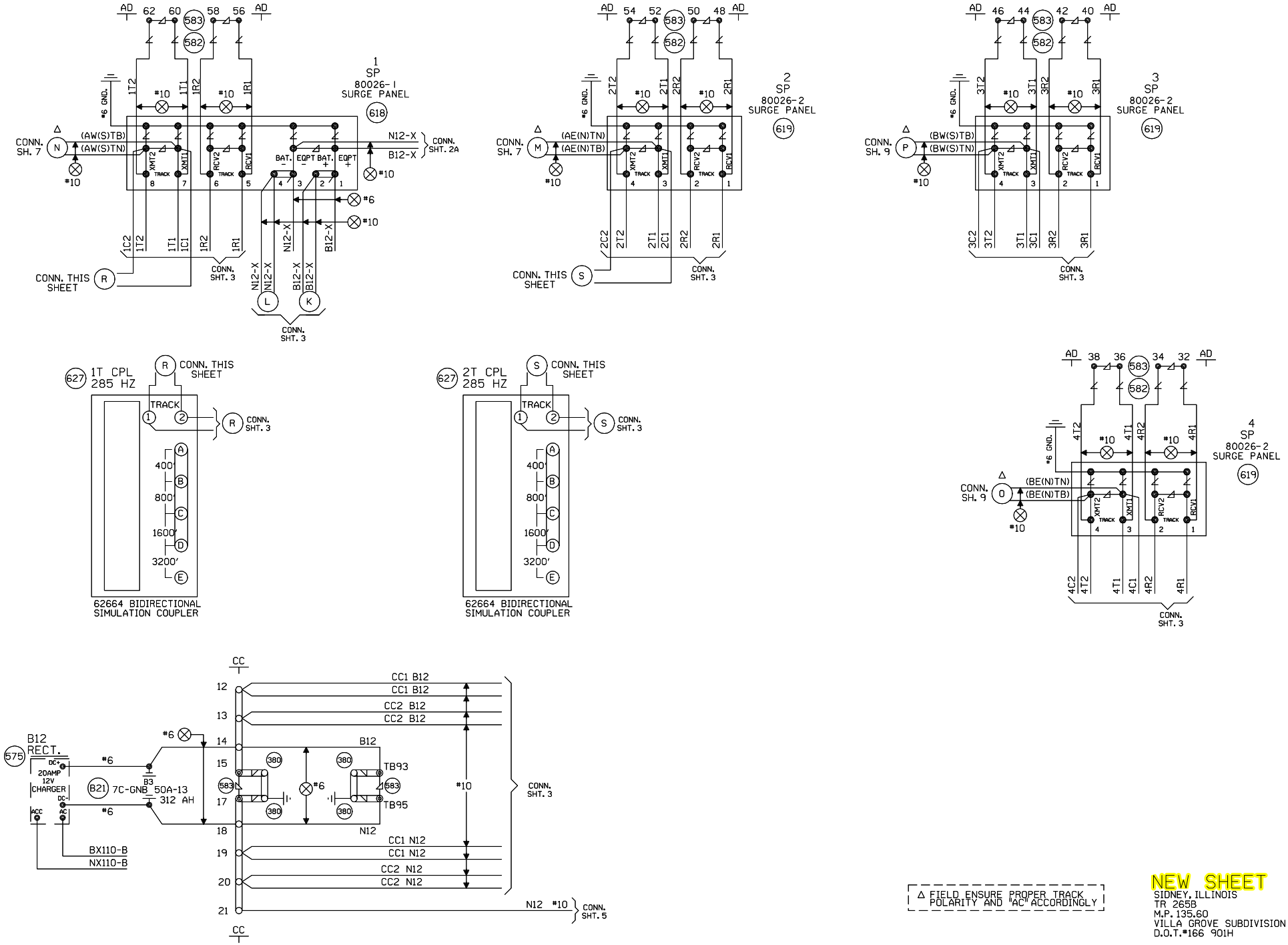

△ FIELD ENSURE PROPER TRACK POLARITY AND "AC" ACCORDINGLY

NEW SHEET
SIDNEY, ILLINOIS
TR 265B
M.P. 135.60
VILLA GROVE SUBDIVISION
D.O.T.#166 901H

1 11-15-06 INSTALL FLS/GATES & CONSTANT WARNING AT TR 265B M.P. 135.60 A.F.E. 59237 JJL /CTC/RDD	MODIFICATION LEVEL		UNION PACIFIC QUALITY PRODUCTIVITY SAFETY SIGNAL DESIGN	DES: CTC	UNION PACIFIC RAILROAD	DATE 11-15-06
	Q. A. LAST LEVEL CHECKED	DP		DIG: CTC	81ST STREET, ILLINOIS TO VILLA GROVE, ILLINOIS	SHEET 4
	LAST LEVEL MOD THIS TYPICAL	DP		CHK: JJL	C.T.C. CIRCUITS	DWG 135.60
	LAST LEVEL BY DESIGNER	DP		A.F.E. 59237	Office of AVP Engineering - Design Omaha, Nebraska	S-301
	CHANGED FROM TYPICAL?	Y		ID= 030113560.4X		
	REV 02.26.07 4K 4TKSPGFC.4					

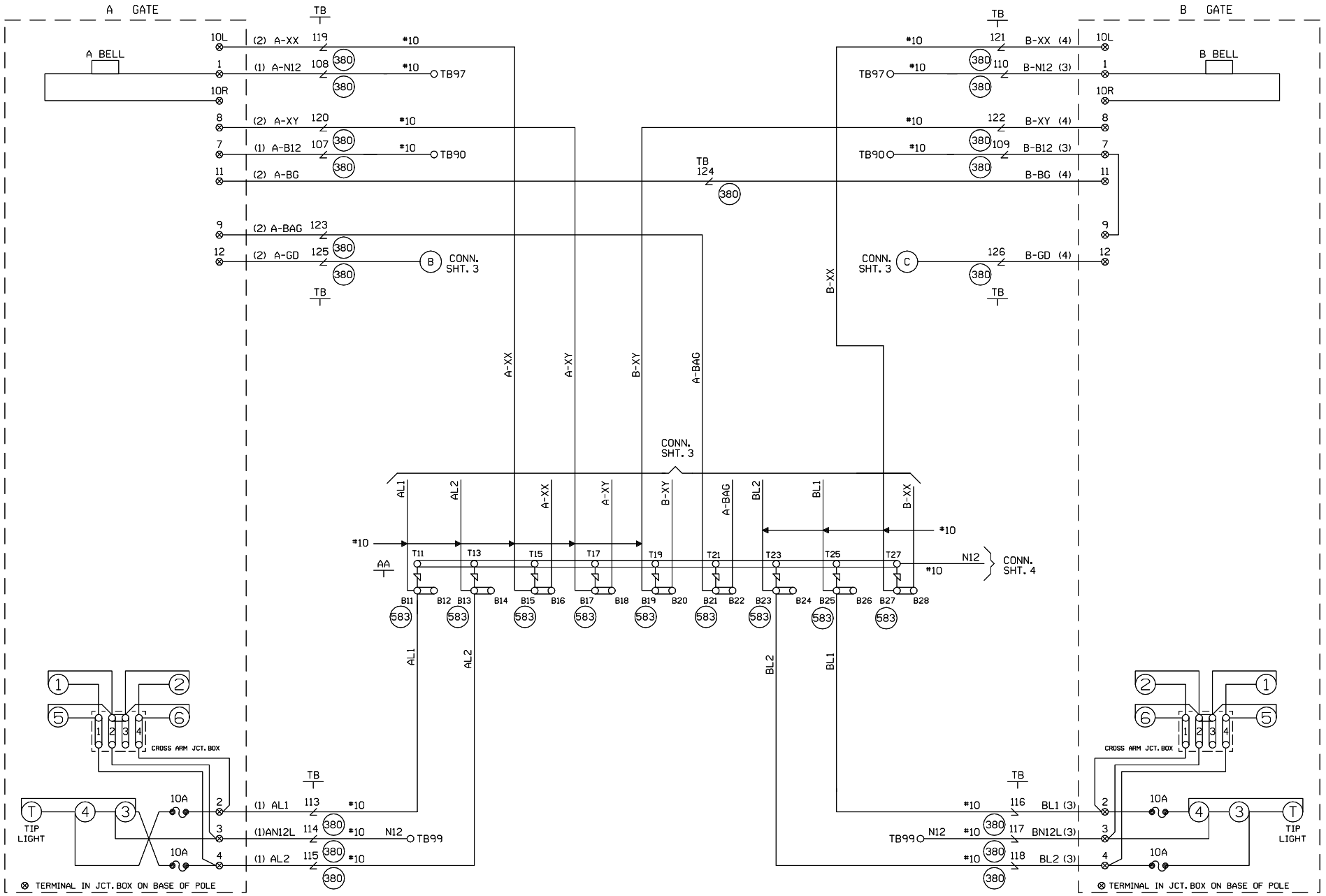

CABLE TABULATION

CABLE NO. 1 5C. NO.6 U.G.B.T.
CABLE NO. 2 7C. NO.14 U.G.B.T.
CABLE NO. 3 5C. NO.6 U.G.B.T.
CABLE NO. 4 7C. NO.14 U.G.B.T.

NEW SHEET
SIDNEY, ILLINOIS
TR 265B
M.P. 135.60
VILLA GROVE SUBDIVISION
D.O.T.#166 901H

1 11-15-06	INSTALL FLS/GATES & CONSTANT WARNING AT TR 265B M.P. 135.60 A.F.E. 59237 JJL / /CTC/ROD

MODIFICATION LEVEL

O. A. LAST LEVEL CHECKED	DP
LAST LEVEL MOD THIS TYPICAL	DP
LAST LEVEL BY DESIGNER	DP
CHANGED FROM TYPICAL?	Y

MEY 02.26.07 4K GFCTYP.5

UNION PACIFIC
QUALITY PRODUCTIVITY SAFETY
SIGNAL DESIGN

DES:	CTC
DIG:	CTC
CHK:	JJL
A.F.E.	59237
ID= 030113560.5X	

UNION PACIFIC RAILROAD

81ST STREET, ILLINOIS TO
VILLA GROVE, ILLINOIS
C.T.C. CIRCUITS

Office of AVP Engineering - Design Omaha, Nebraska

DATE	11-15-06
SHEET	5
DWG	135.60
	S-301

WCH 3597

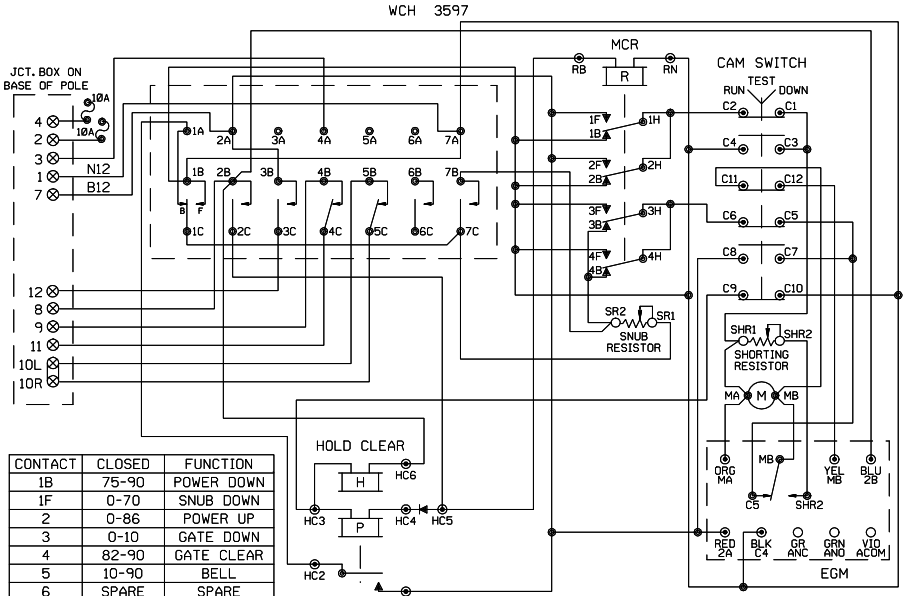

CONTACT	CLOSED	FUNCTION
1B	75-90	POWER DOWN
1F	0-70	SNUB DOWN
2	0-86	POWER UP
3	0-10	GATE DOWN
4	82-90	GATE CLEAR
5	10-90	BELL
6	SPARE	SPARE
7	0-10	SNUB

WCH 3597-RB

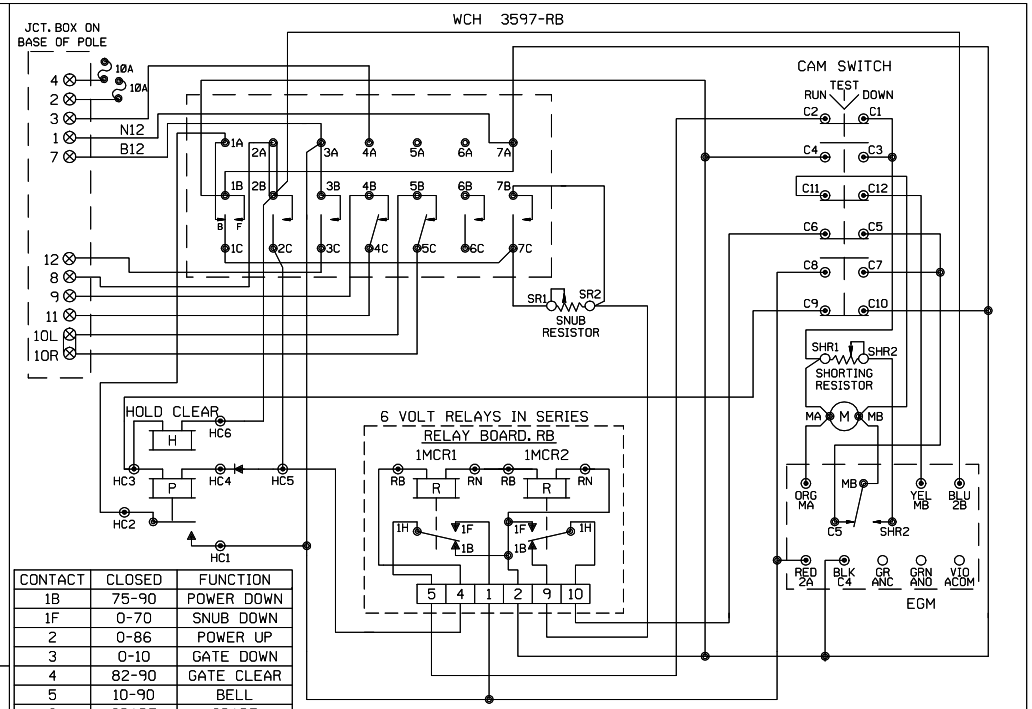

CONTACT	CLOSED	FUNCTION
1B	75-90	POWER DOWN
1F	0-70	SNUB DOWN
2	0-86	POWER UP
3	0-10	GATE DOWN
4	82-90	GATE CLEAR
5	10-90	BELL
6	SPARE	SPARE
7	0-10	SNUB

WCH 3593-E

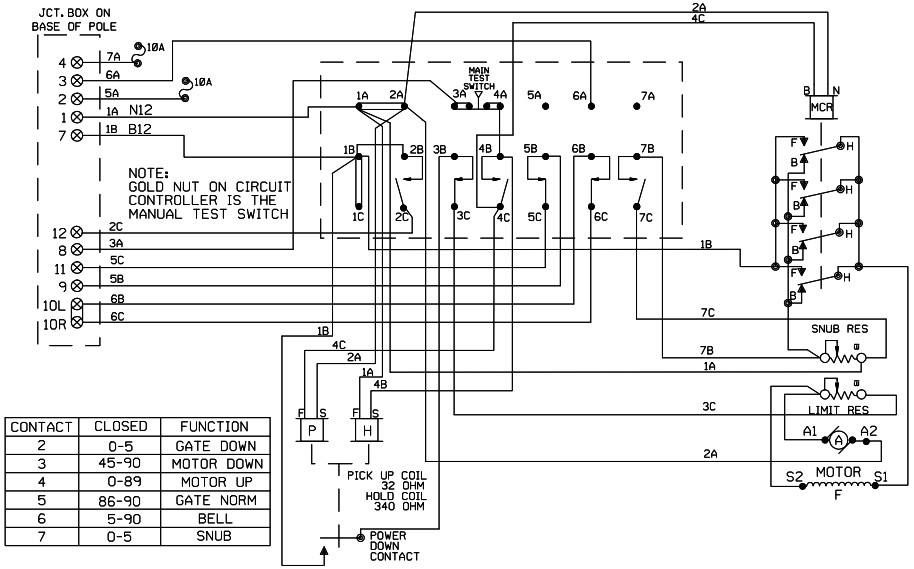

CONTACT	CLOSED	FUNCTION
2	0-5	GATE DOWN
3	45-90	MOTOR DOWN
4	0-89	MOTOR UP
5	86-90	GATE NORM
6	5-90	BELL
7	0-5	SNUB

WCH 3597-E

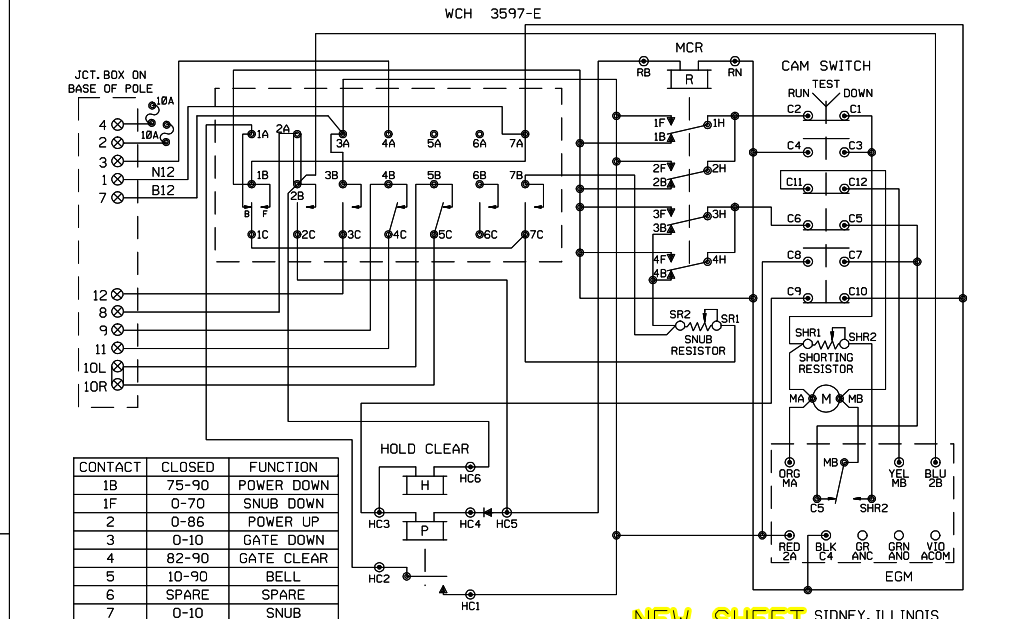

CONTACT	CLOSED	FUNCTION
1B	75-90	POWER DOWN
1F	0-70	SNUB DOWN
2	0-86	POWER UP
3	0-10	GATE DOWN
4	82-90	GATE CLEAR
5	10-90	BELL
6	SPARE	SPARE
7	0-10	SNUB

SHOW TYPE MECH. INSTALLED

ALL MECHANISMS SHOWN IN THE CLEAR POSITION

JCT. BOX ON BASE POLE

L	R	L	R
1		7	
2		8	
3		9	
4		10	
5		11	
6		12	

NEW SHEET SIDNEY, ILLINOIS
TR 265B
M.P. 135.60
VILLA GROVE SUBDIVISION
D.O.T.#166 901H

1	11-15-06	INSTALL FLS/GATES & CONSTANT WARNING AT TR 265B M.P. 135.60 A.F.E. 59237	JJL / /CTC/RDD	

MODIFICATION LEVEL

O. A. LAST LEVEL CHECKED	DP
LAST LEVEL MOD THIS TYPICAL	DP
LAST LEVEL BY DESIGNER	DP
CHANGED FROM TYPICAL?	N

NOV 02.26.07 4K GWIRING.DGN

UNION PACIFIC
QUALITY PRODUCTIVITY SAFETY
SIGNAL DESIGN

DES:	CTC
DIG:	CTC
CHK:	JJL
A.F.E.	59237
ID= 030113560.6X	

UNION PACIFIC RAILROAD

81ST STREET, ILLINOIS TO
VILLA GROVE, ILLINOIS
C.T.C. CIRCUITS

Office of AVP Engineering - Design Omaha, Nebraska

DATE 11-15-06
SHEET 6
DWG 135.60
S-301