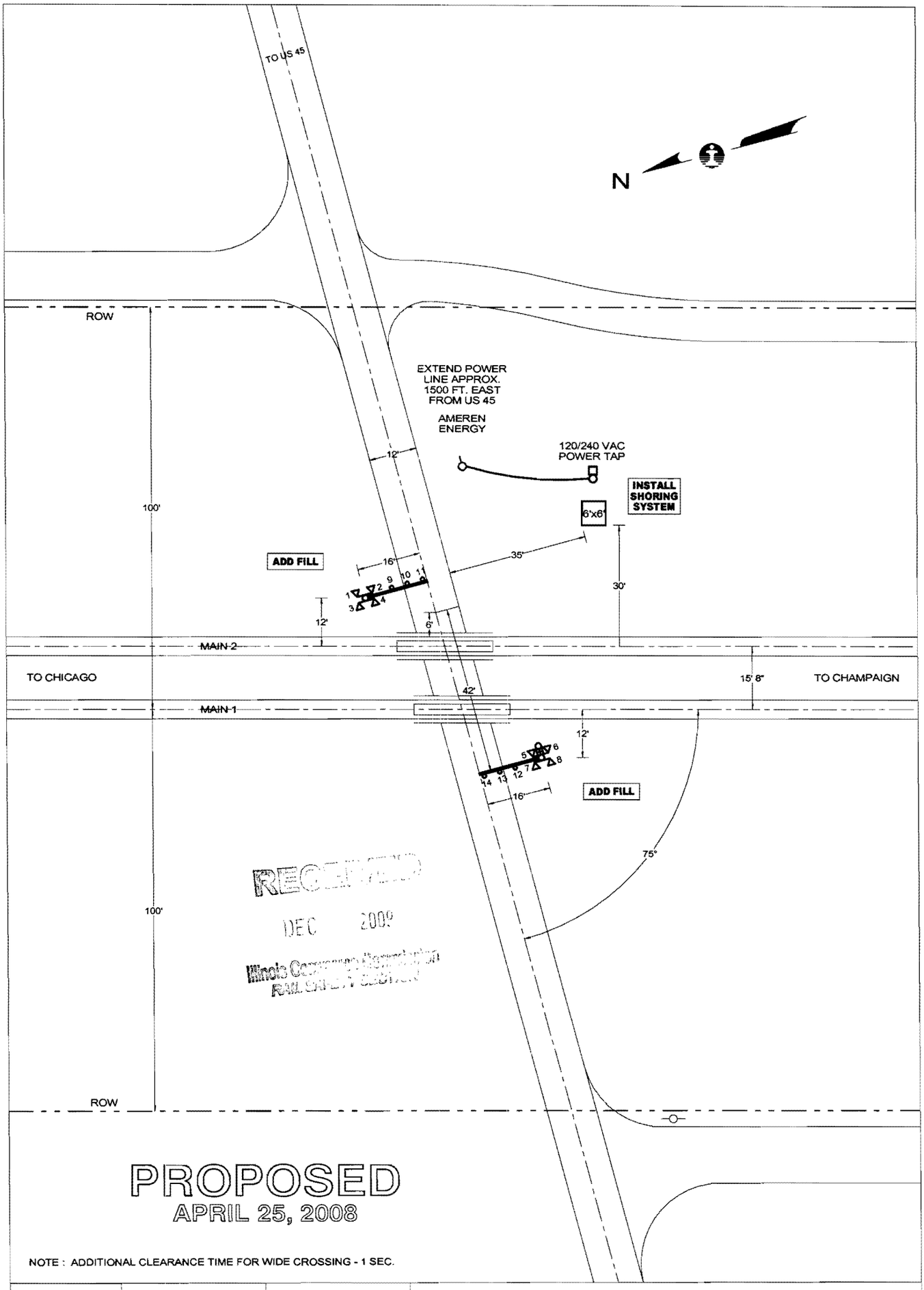

RECEIVED
DEC 2009
Illinois Commerce Commission
RAIL SAFETY SECTION

PROPOSED
APRIL 25, 2008

NOTE : ADDITIONAL CLEARANCE TIME FOR WIDE CROSSING - 1 SEC.

QUADRANT	NE	SW
STANDARD AFLS	LED	LED
CANTILEVER, FT.	-	-
GATE, FT.	16	16
ADDED LIGHTS	-	-
BARRICADE	-	-
MULTI-TK SIGN	-	-
BELL	-	X
REVISIONS		

E:\DWG\CHI\08320X.CAD

CN

SIGNALS & COMMUNICATIONS, ENGINEERING DEPARTMENT

CITY & STATE: GILMAN, IL	SD 1007 X
CROSSING: 1600N - TR 555	DATE: APRIL 25, 2008
IC - 83.20	DOT - 288 991W
MIDWEST DIVISION	CHICAGO SUBDIVISION
IN SERVICE	SCALE: 1"=30' / DRAWN BY: AVS

SD 1007 - MP 82 TO 83

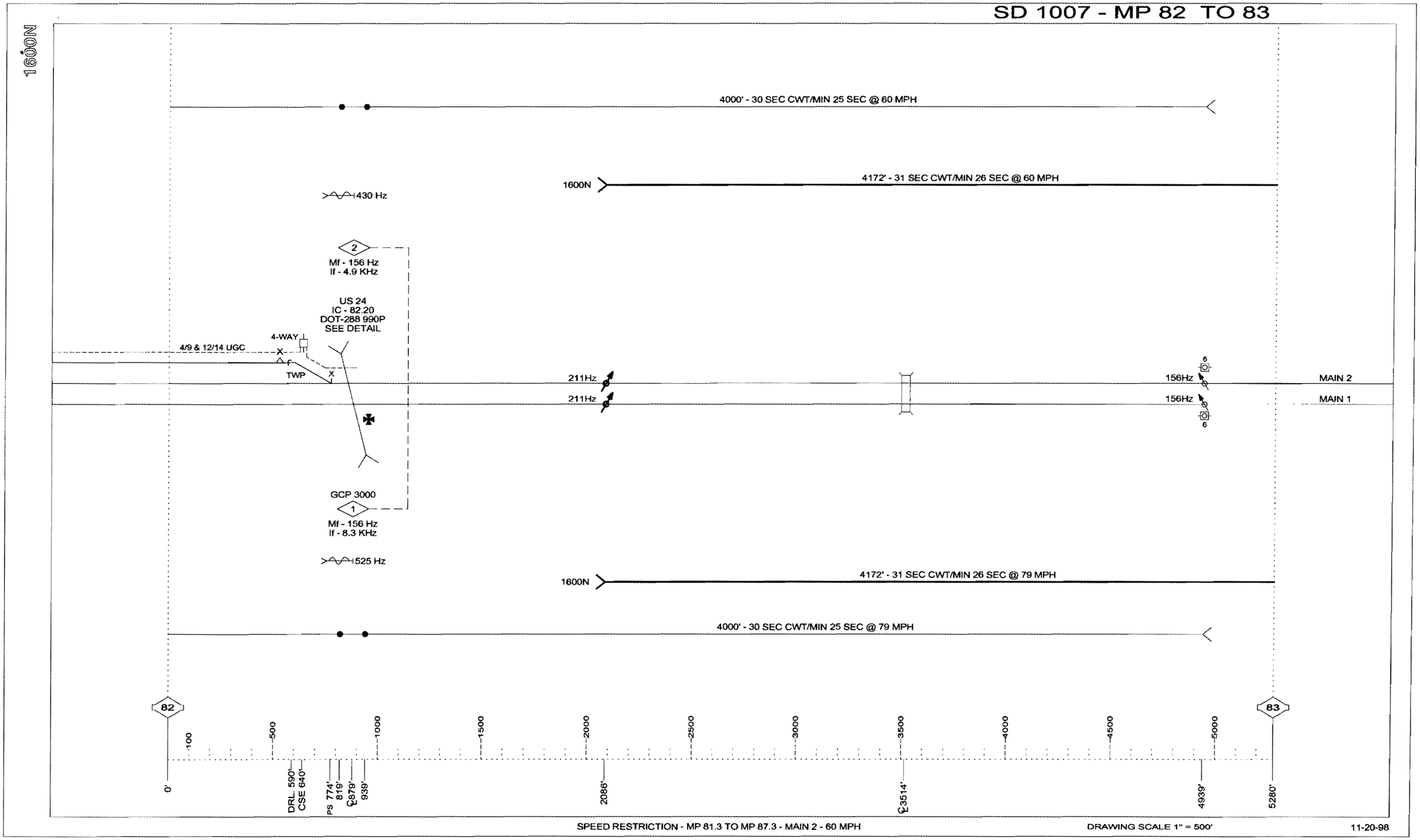

SPEED RESTRICTION - MP 81.3 TO MP 87.3 - MAIN 2 - 60 MPH

DRAWING SCALE 1" = 500'

11-20-98

SD 1007 - MP 83 TO 84

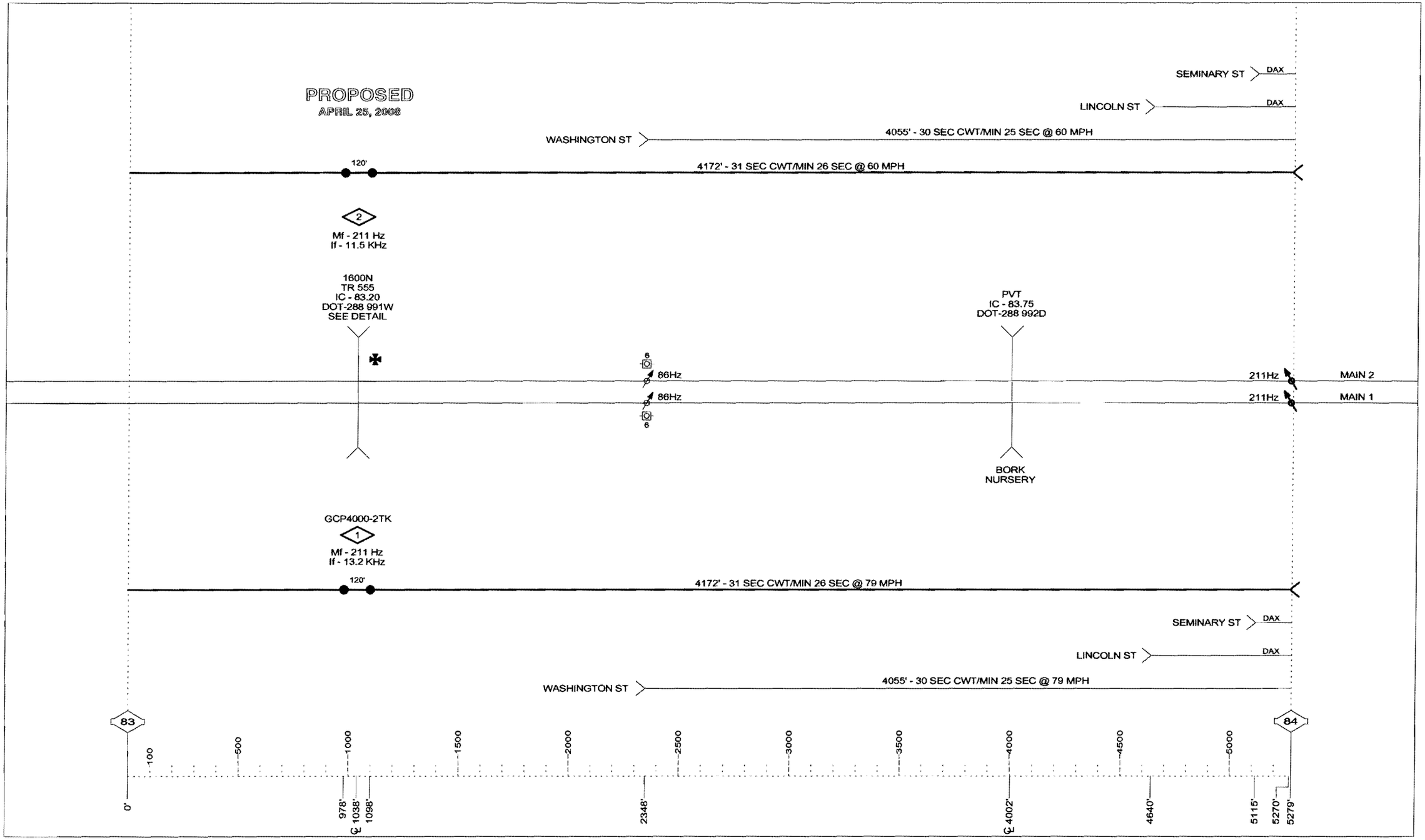

SPEED RESTRICTION - MP 81.3 TO MP 87.3 - MAIN 2 - 60 MPH

DRAWING SCALE 1" = 500'

11-20-98

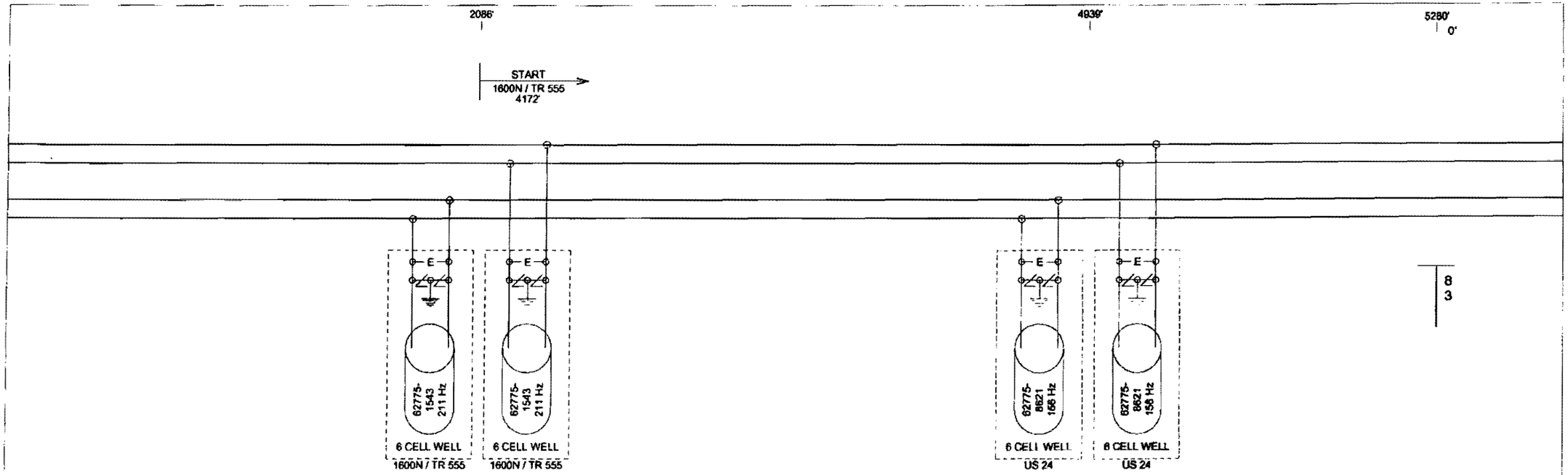

NOTE.

1) ● DENOTES MULTI-FREQ. NARROW BAND SHUNT 62775-1543

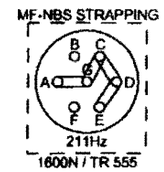

10-21-09

PROPOSED

DES. No. _____

RED-IN BLUE-OUT

AS INSTALLED

DATE _____

BY _____

REGION MIDWEST	Illinois Central — COMMUNICATIONS & SIGNALS, ENGINEERING DEPARTMENT
DISTRICT CHICAGO	SD 1007 C MP 82.40 TO 83.00
FILENAME 08240C01.CAD	Gilman, IL
DESIGNER MKN / DATE 5/6/98	NB STARTS - US 24
SHEET NO 1 OF 1	

5 4 3 2 11-20-98 1 REVISIONS

$WATERMARK

chi-083.20-01.dgn
10-NOV-2009

REVISIONS				
NO.	DATE	BY	DESCRIPTION	APP. BY
1				
2				
3				
4				
5				

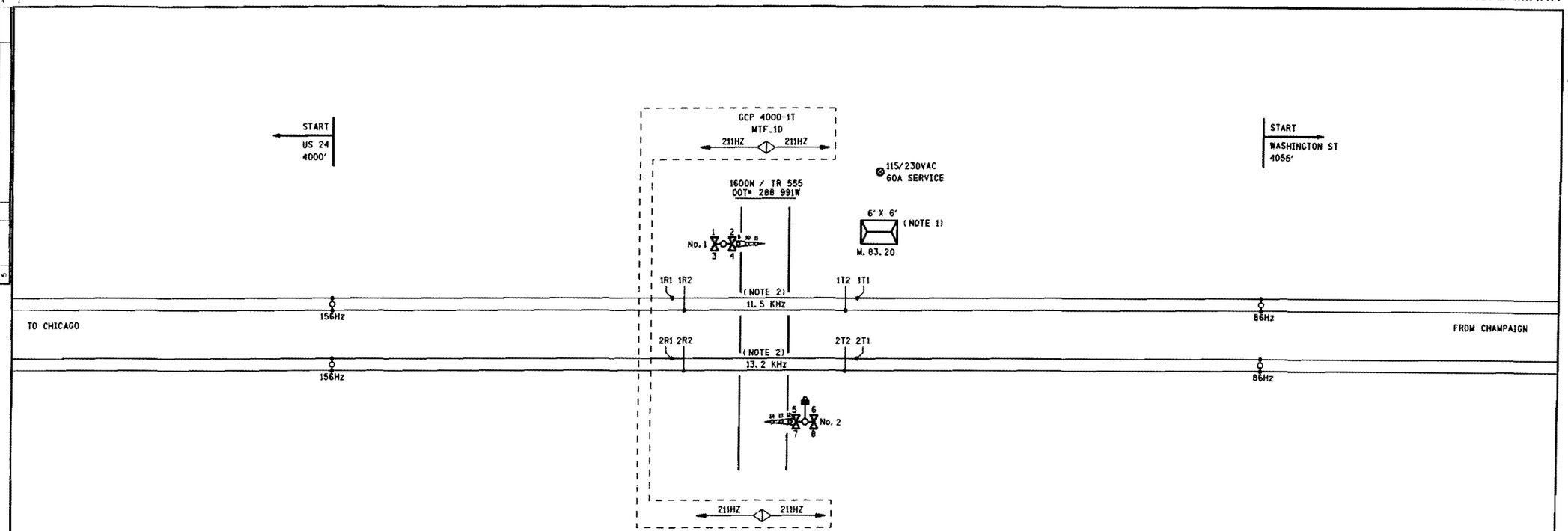

PROPOSED
DES. No. _____
RED-IN YELLOW-OUT
AS INSTALLED
DATE _____
BY _____

NOTES:
1) BUNGALOW TO BE INSTALLED WITH DOORS FACING TRACK.
2) ISLAND DISTANCE MINIMUM 120 FEET

6' X 6' BUNGALOW

PROPOSED			REVISIONS	D	C	COMPLETED			C
D	M	Y				D	M	Y	

REGION SOUTHERN
SUB. CHICAGO 340
CN

SIGNALS AND COMMUNICATIONS HOMEWOOD | DES. APL
21 OCTOBER 2009 | CH. MKN

TRACK LAYOUT
1600N / TR 555
GILMAN, IL

CHI-083.20-01

SAFETRAN SYSTEM CORP.
LOUISVILLE DIVISION, LOUISVILLE, KY

15

SAFETRAN SYSTEMS CORPORATION		
DES. : APL	DATE: 21/10/09	JOB NO. : PICA10196
CKD. : MKN	ISSUE DATE:	EST. NO. :
DRN. : APL	PLAN NO. :	SHEET 1 OF 15
P. TIME: 13:04	P. DATE: 10-NOV-2009	CAD ID. : CHI-083.20-01

$WATERMARK

NO.	DATE	BY	DESCRIPTION	APP.	BY
1					
2					
3					
4					
5					

REVISIONS

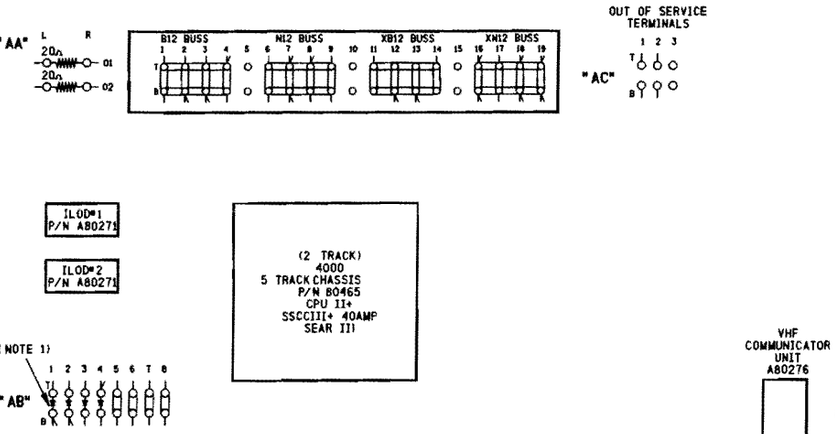

NOTE:

1) ⊸ DENOTES RECTIFIER : (SAFETRAN# 8008A299006)

SIDE "A"

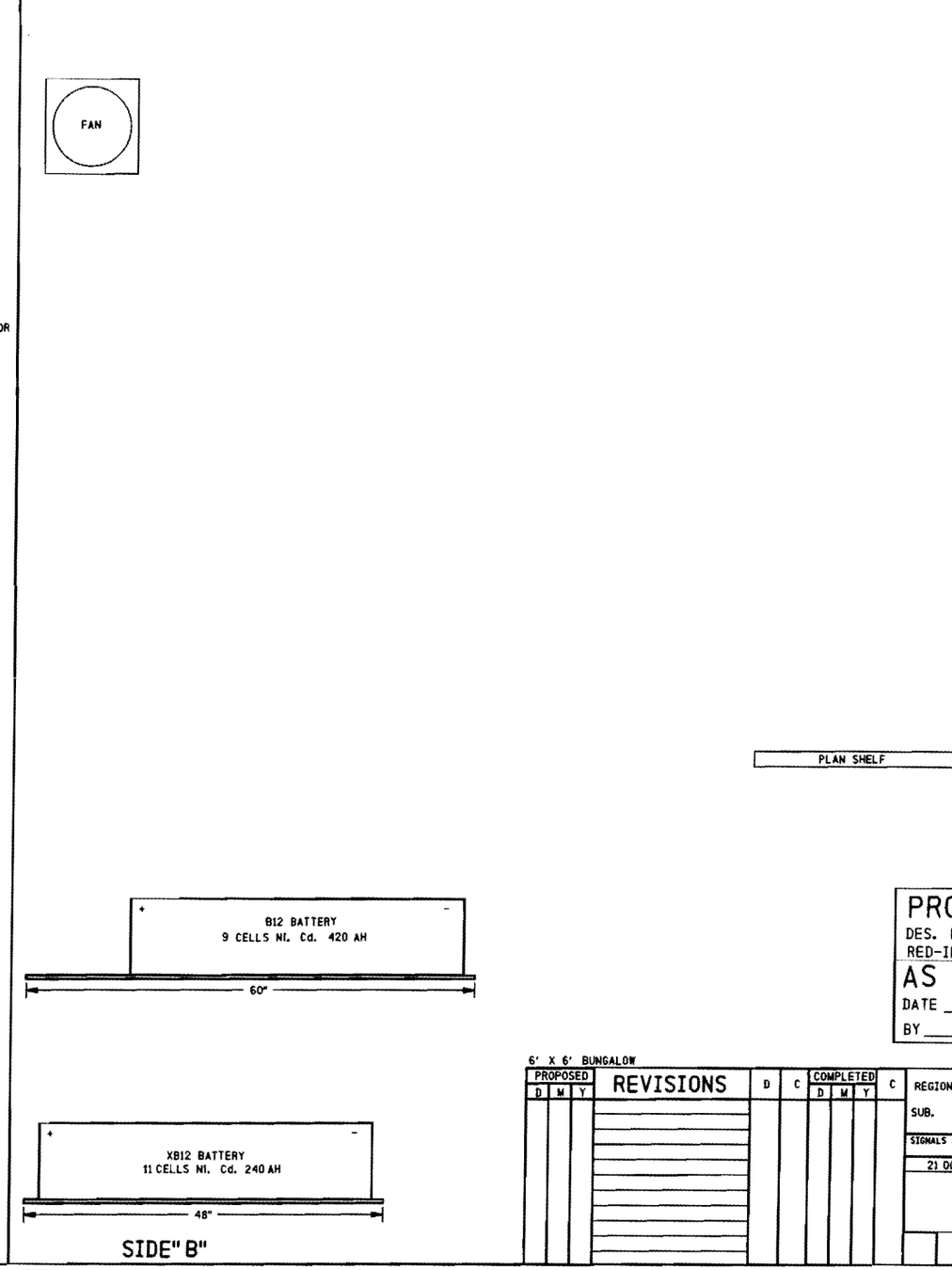

SIDE "B"

PROPOSED
DES. No. _____
RED-IN YELLOW-OUT
AS INSTALLED
DATE _____
BY _____

PROPOSED D	M	Y	REVISIONS	D	C	COMPLETED D	M	Y	C

REGION SOUTHERN
SUB. CHICAGO 340
CN
SIGNALS AND COMMUNICATIONS HOMEWOOD | DES. APL
21 OCTOBER 2009 | CH. MKN
BUNGALOW LAYOUT
SIDE "A" & "B"
1600N / TR 555
GILMAN, IL
CHI-083.20-02

SAFETRAN SYSTEM CORP.
LOUISVILLE DIVISION, LOUISVILLE, KY

chi-083.20-02.dgn
10-NOV-2009

SAFETRAN SYSTEMS CORPORATION

DES. : APL	DATE: 23/10/09	JOB NO. : PICA10196	
CKD. : MKN	ISSUE DATE:	EST. NO. :	
DRN. : APL	PLAN NO. :	SHEET 2 OF 15	
P TIME: 13:04	P DATE: 10-NOV-2009	CAD ID. : CHI-083.20-02	

$WATERMARK

NO.	DATE	BY	REVISIONS DESCRIPTION	APP. BY
1				
2				
3				
4				
5				

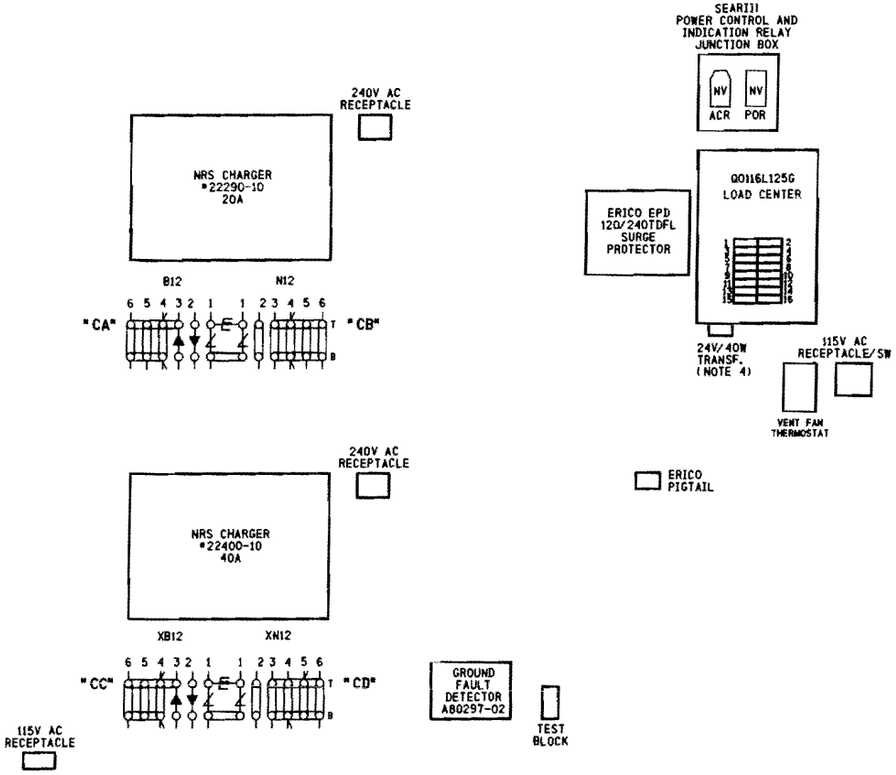

NOTES:

1) ⏚ DENOTES EQUALIZER TYPE:(SAFETRAN #022700-1X)
2) ⏚ DENOTES LIGHTNING ARRESTER TYPE:(SAFETRAN #022585-1X)
3) SURGE PROTECTION SHOULD BE BONDED TO BUNGALOW.
4) 24V-40W TRANSFORMER (CN STOCK #02-45-367)

SIDE "C"

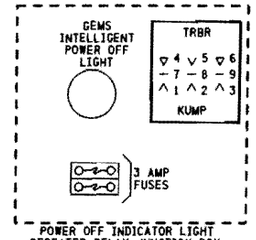

POWER OFF INDICATOR LIGHT REPEATER RELAY JUNCTION BOX. (REFER TO PS-90T SHT. 2A)

SIDE "D"
ABOVE ENTRY DOOR

chi-083.20-03.dgn
10-NOV-2009

PROPOSED
DES. No. _____
RED-IN YELLOW-OUT
AS INSTALLED
DATE _____
BY _____

6' X 6' BUNGALOW

PROPOSED D	M	Y	REVISIONS	D	C	COMPLETED D	M	Y	C

REGION SOUTHERN
SUB. CHICAGO 34D
CN

SIGNALS AND COMMUNICATIONS HOMEWOOD — DES. APL
21 OCTOBER 2009 — CH. MKN

BUNGALOW LAYOUT
SIDE "C" & OVER DOOR SIDE "D"
1600N / TR 555
GILMAN, IL

CHI-083.20-03

SAFETRAN SYSTEM CORP.
LOUISVILLE DIVISION, LOUISVILLE, KY

SAFETRAN SYSTEMS CORPORATION

DES.: APL	DATE: 21/10/09	JOB NO.: PPICA10196
CKD.: MKN	ISSUE DATE:	EST. NO.:
DRN.: APL	PLAN NO.:	SHEET 3 OF 15
P TIME: 13:04	P DATE: 10-NOV-2009	CAD ID.: CHI-083.20-03

$WATERMARK

chi-083.20-04.dgn
10-NOV-2009

NO.	DATE	BY	DESCRIPTION	APP. BY
1				
2				
3				
4				
5				

REVISIONS

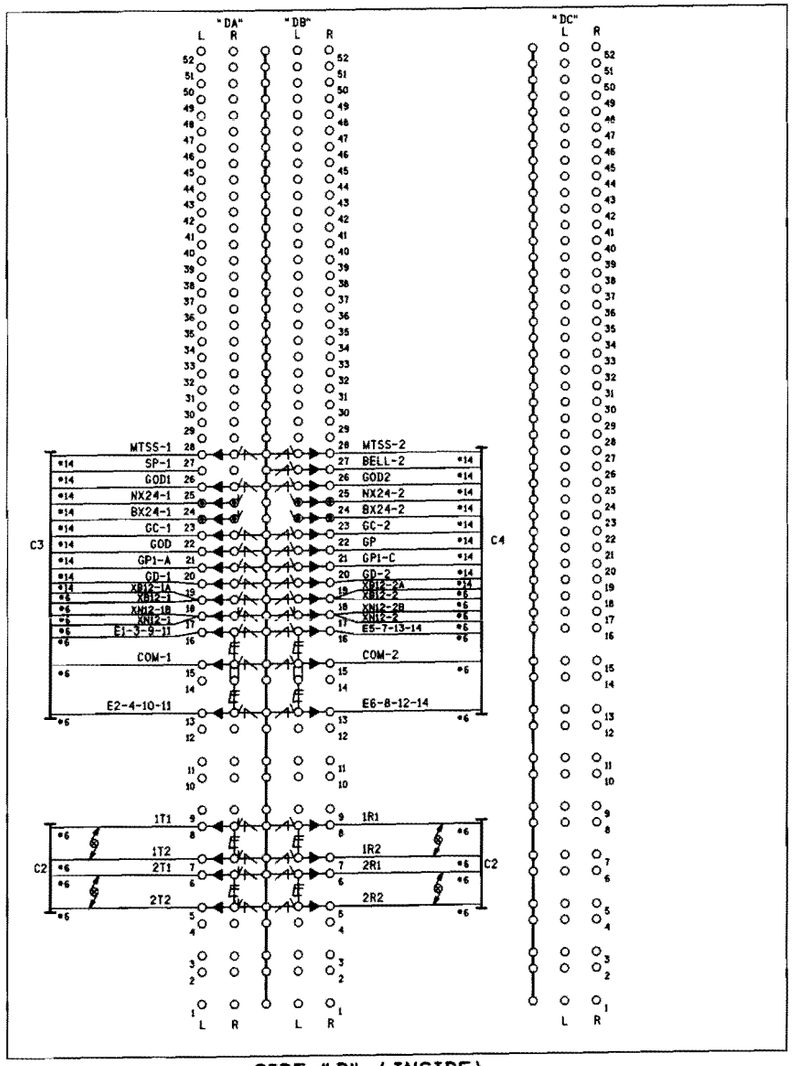

SIDE "D" (INSIDE)

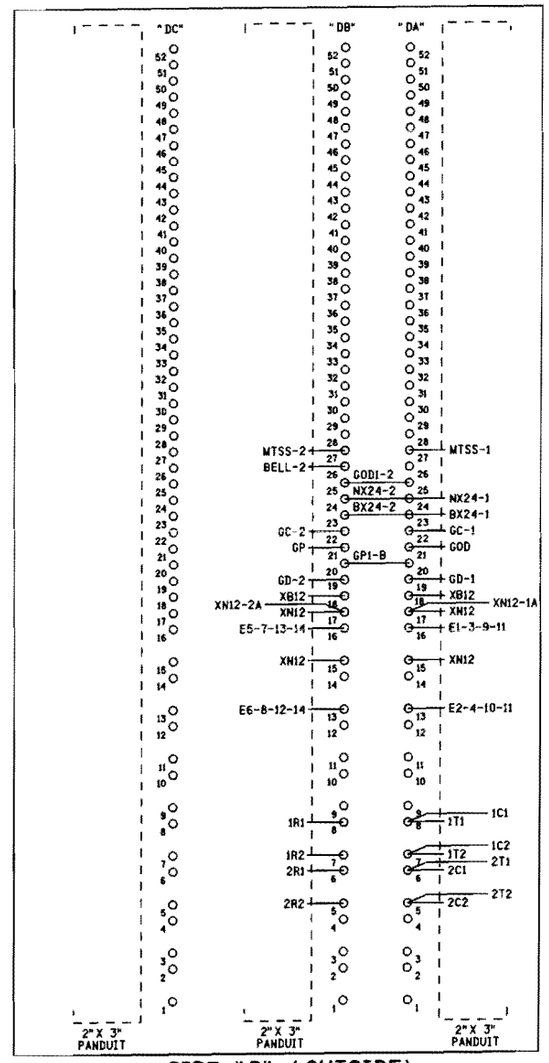

SIDE "D" (OUTSIDE)

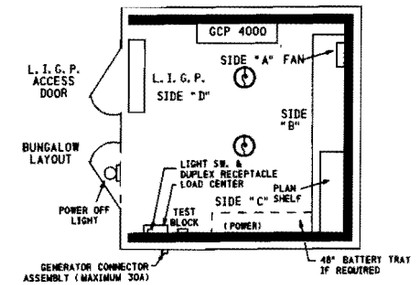

ROOF MOUNTED AC/HEATING UNIT

CABLE CONSIST:

C1-3C#6 TECK 90 U/G TO MAIN SERVICE
C2-(4)-2SC#6 TW. TO TRACK
C3-16C (7#6, 9#14) TO GATE (SIG.#1)
C4-16C (7#6, 9#14) TO GATE (SIG.#2)

NOTES:

1) DENOTES LIGHTNING ARRESTER TYPE:(SAFETRAN #022585-1X)
2) DENOTES EQUALIZER TYPE:(SAFETRAN #022700-1X)
3) DENOTES TWISTED PAIR.
4) ENSURE DOUBLE NUTTING OF ALL TERMINALS.
5) ● DENOTES INSULATED TERMINAL

PROPOSED
DES. No. _____
RED-IN YELLOW-OUT
AS INSTALLED
DATE _____
BY _____

6' X 6' BUNGALOW

PROPOSED D	PROPOSED M	PROPOSED Y	REVISIONS	D	C	COMPLETED D	COMPLETED M	COMPLETED Y	C

REGION SOUTHERN
SUB. CHICAGO 340
CN

SIGNALS AND COMMUNICATIONS HOMEWOOD
DES. APL
CH. MKN
21 OCTOBER 2009

BUNGALOW LAYOUT SIDE "D"
LOW IMPEDANCE GROUND PLANE
16OON / TR 555
GILMAN, IL

CHI-083.20-04

SAFETRAN SYSTEM CORP.
LOUISVILLE DIVISION, LOUISVILLE, KY

SAFETRAN SYSTEMS CORPORATION

DES.: APL	DATE: 21/10/09	JOB NO.: PICAI0196	
CKD.: MKN	ISSUE DATE:	EST. NO.:	
DRN.: APL	PLAN NO.:	SHEET 4 OF 15	
P TIME: 13:04	P DATE: 10-NOV-2009	CAD ID.: CHI-083.20-04	

$WATERMARK

REVISIONS				
NO.	DATE	BY	DESCRIPTION	APP. BY
1				
2				
3				
4				
5				

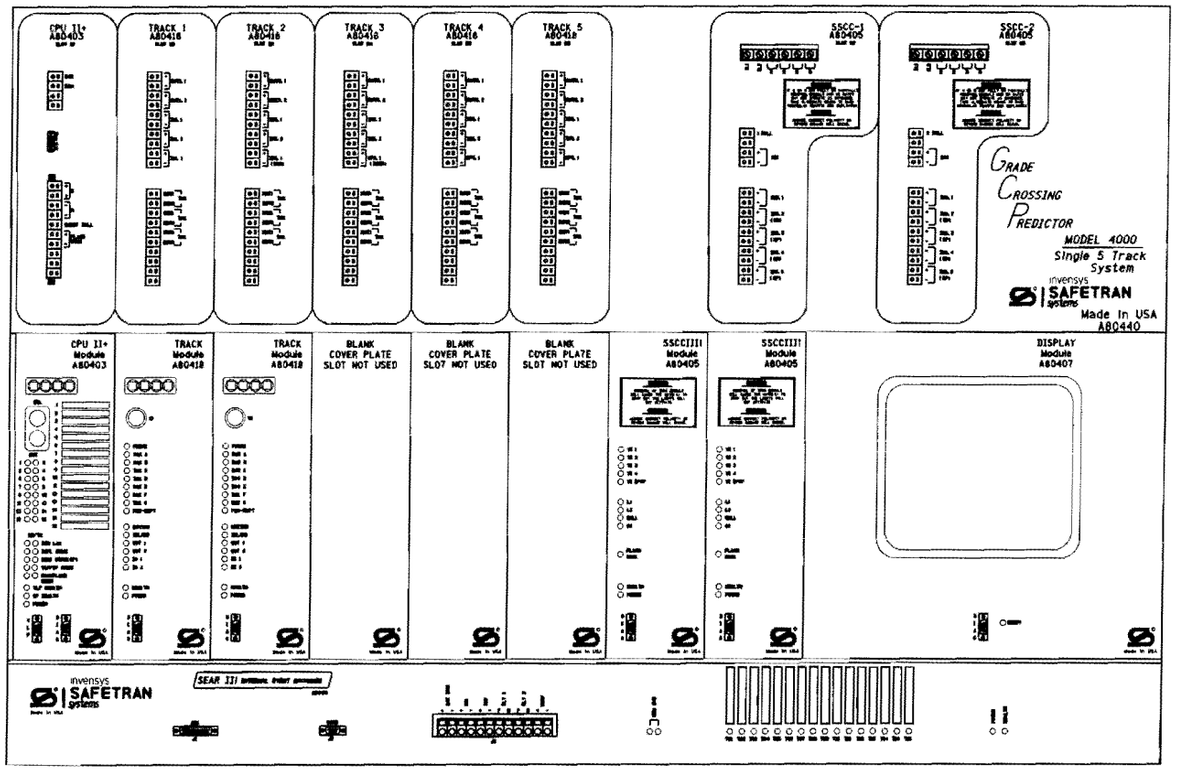

NOTES:

1) DISABLE THE DISPLAY HEATER BY REMOVING JUMPER J-22 (LOCATED AT THE EDGE OF THE DISPLAY MODULE CARD THAT PLUGS INTO THE CHASSIS).

ATTENTION!

ENSURE THE DISPLAY MODULE HEATER IS DISABLED. LEAVING THE DISPLAY HEATER ENABLE WILL REDUCE THE AMOUNT OF BATTERY STANDBY TIME IN THE EVENT OF AN AC POWER FAILURE.

HEATER FUNCTION IS
JUMPER SELECTABLE ON
THE DISPLAY MODULE BOARD.
THREE OPTIONS ARE AVAILABLE.
NORMAL LCD HTR (DEFAULT)
HI CURRENT
NO JUMPER (HEATER DISABLED)

PROPOSED
DES. No. _____
RED-IN YELLOW-OUT
AS INSTALLED
DATE _____
BY _____

6' X 6' BUNGALOW

PROPOSED D	PROPOSED M	PROPOSED Y	REVISIONS	D	C	COMPLETED D	COMPLETED M	COMPLETED Y	C

REGION SOUTHERN
SUB. CHICAGO 340
CN

SIGNALS AND COMMUNICATIONS HOMEWOOD | DES. APL
21 OCTOBER 2009 | CH. MKN

GCP 4000 NON-REDUNDANT
5 TRACK TRK CHASSIS & MODULE LAYOUT
1600N / TR 555
GILMAN, IL

CHI-083.20-05

SAFETRAN SYSTEM CORP.
LOUISVILLE DIVISION, LOUISVILLE, KY

CHI-083.20-05.dgn
10-NOV-2009

SAFETRAN SYSTEMS CORPORATION		
DES.: APL	DATE: 21/10/09	JOB NO.: PTCA10136
CKD.: MKN	ISSUE DATE:	EST. NO.:
DRN.: APL	PLAN NO.:	SHEET 5 OF 15
P. TIME: 13:04	P. DATE: 10-NOV-2009	CAD TO.: CHI-083.20-05

$WATERMARK

NO.	DATE	BY	REVISIONS DESCRIPTION	APP. BY
1				
2				
3				
4				
5				

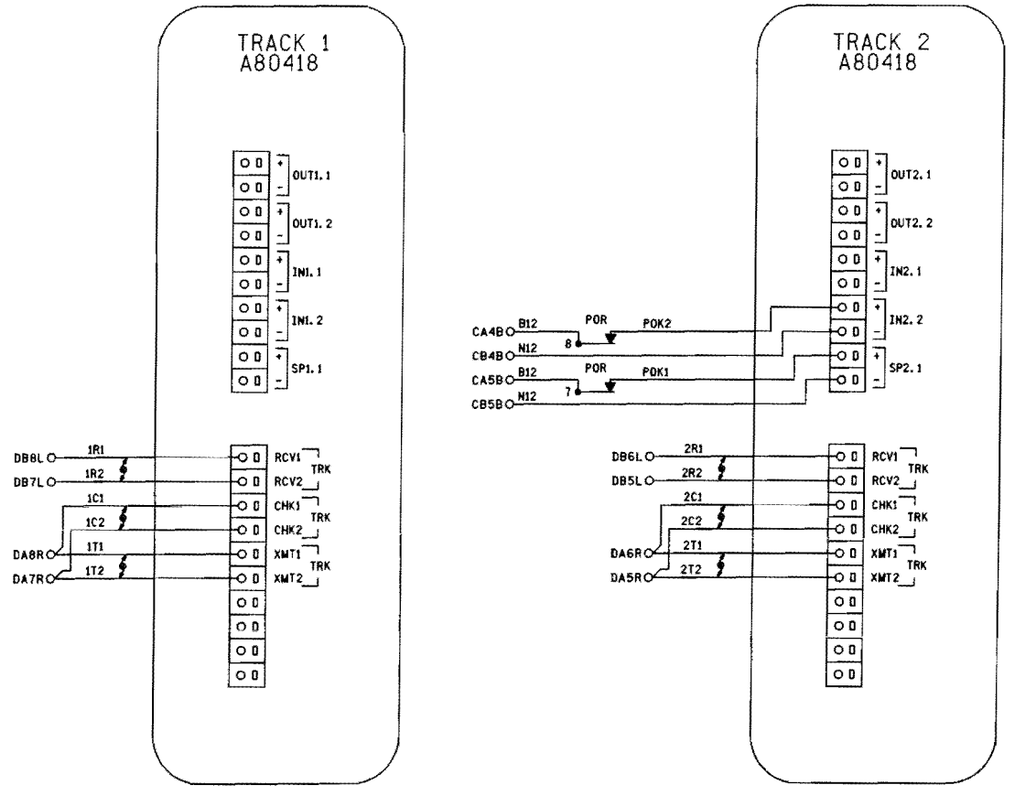

NOTES:

1) ALL WIRING #16 AWG UNLESS OTHERWISE NOTED.

2) ⚡ DENOTES TWISTED PAIR.

PROPOSED
DES. No. _____
RED-IN YELLOW-OUT
AS INSTALLED
DATE _____
BY _____

6' X 6' BUNGALOW

PROPOSED D	M	Y	REVISIONS	D	C	COMPLETED D	M	Y	C

REGION SOUTHERN
SUB. CHICAGO 34D

SIGNALS AND COMMUNICATIONS HOMEWOOD | DES. APL
21 OCTOBER 2009 | CH. MKN

GCP 4000
TRACKS 1 & 2 CONNECTIONS
1600N / TR 555
GILMAN, IL

CHI-083.20-06

SAFETRAN SYSTEM CORP.
LOUISVILLE DIVISION, LOUISVILLE, KY

SAFETRAN SYSTEMS CORPORATION

DES.: APL	DATE: 21/10/09	JOB NO.: PICA10196	
CKD.: MKN	ISSUE DATE:	EST. NO.:	
DRN.: APL	PLAN NO.:	SHEET 6 OF 15	
P TIME: 13:04	P DATE: 10-NOV-2009	CAD ID.: CHI-083.20-06	

chi-083.20-06.dgn
10-NOV-2009

$WATERMARK

chi-083.20-07.dgn
10-NOV-2009

NO.	DATE	BY	DESCRIPTION	APP. BY
1				
2				
3				
4				
5				

REVISIONS

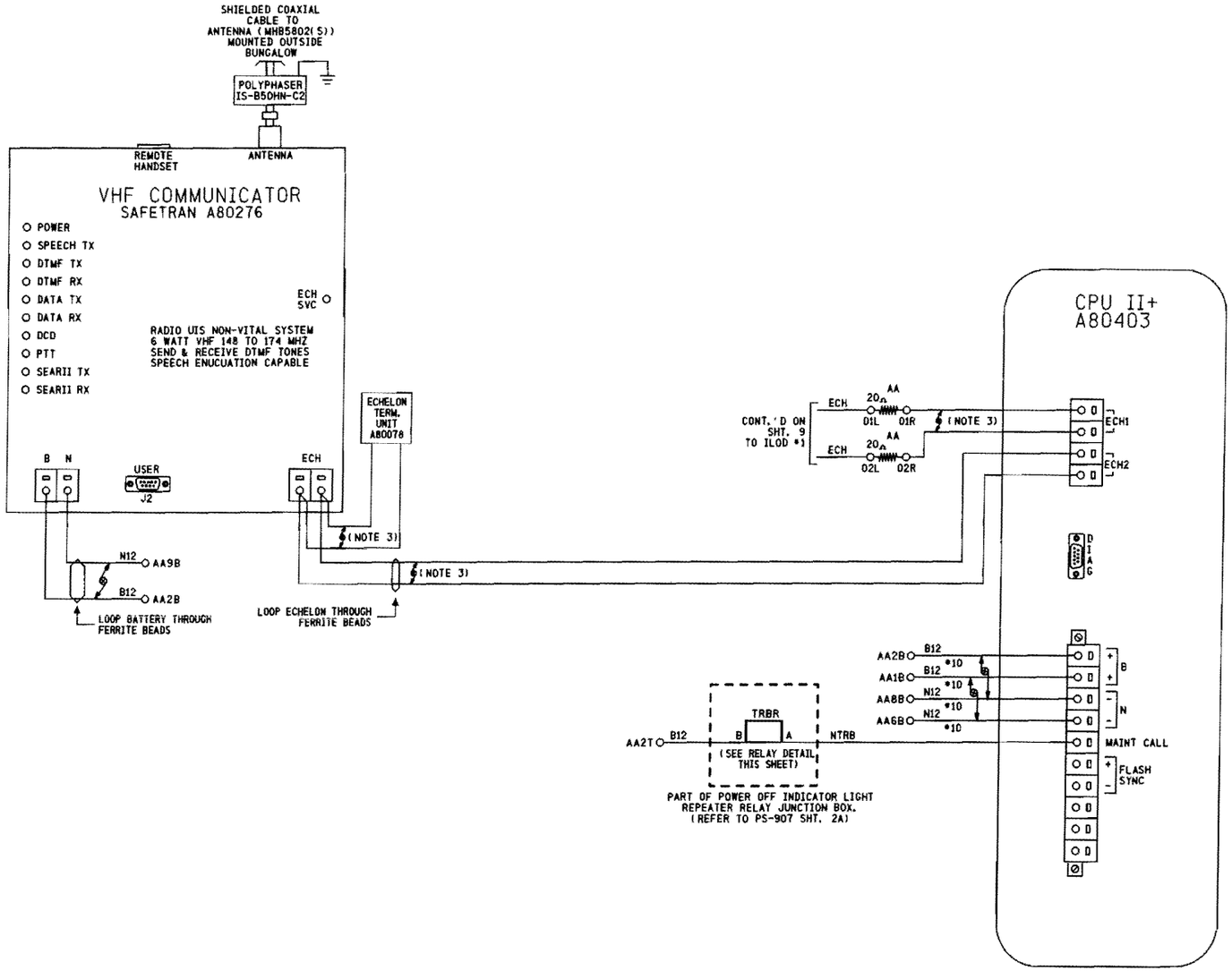

RELAY DETAIL

RELAY - POTTER & BRUMFIELD
MODEL KUMP-14D18-12 SOCKET MOUNTABLE
12 VDC W/ 3 FORM C CONTACTS.

SOCKET - SCREW TERMINAL
MODEL 27E121.

RELAY WIRING DIAGRAM (REAR VIEW)

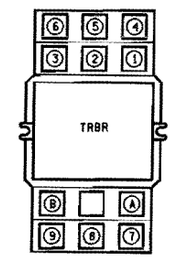

LOCATED OVER ENTRY DOOR

NOTE:
SOCKET NUMBERING CORRESPONDS DIRECTLY WITH RELAY NUMBERING.
(COIL SHOWN ENERGIZED)

NOTES:
1) ALL WIRING #16 AWG UNLESS OTHERWISE NOTED.
2) DENOTES TWISTED PAIR.
3) USE BELDEN CABLE, PART #8461-U500-60 FOR ALL ECHELON AND LAN WIRING.

PROPOSED
DES. No. _____
RED-IN YELLOW-OUT
AS INSTALLED
DATE _____
BY _____

6' X 6' BUNGALOW

PROPOSED D	M	Y	REVISIONS	D	C	COMPLETED D	M	Y	C

REGION SOUTHERN
SUB. CHICAGO 340
CN
SIGNALS AND COMMUNICATIONS HOMEWOOD
DES. APL
21 OCTOBER 2009
CH. MKN
GCP 4000
CPUII+ & VHF COMMUNICATOR
1600N / TR 555
GILMAN, IL
CHI-083.20-07

SAFETRAN SYSTEM CORP.
LOUISVILLE DIVISION, LOUISVILLE, KY

SAFETRAN SYSTEMS CORPORATION

DES.: APL	DATE: 21/10/09	JOB NO.: P1CA10196	
CKD.: MKN	ISSUE DATE:	EST. NO.:	
DRN.: APL	PLAN NO.:	SHEET 7 OF 15	
P TIME: 13:04	P DATE: 10-NOV-2009	CAD ID.: CHI-083.20-07	

$WATERMARK

chi-083.20-08.dgn
10-NOV-2009

REVISIONS				
NO.	DATE	BY	DESCRIPTION	APP. BY
1				
2				
3				
4				
5				

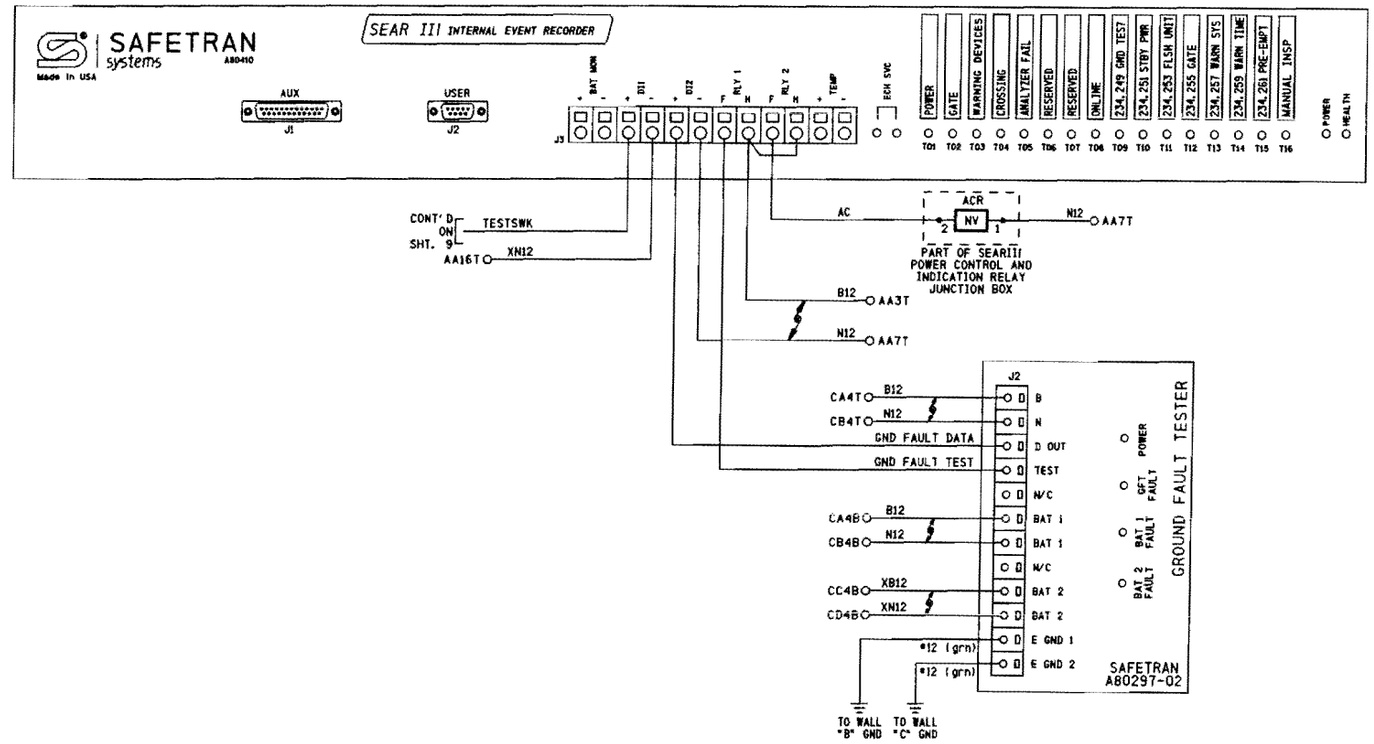

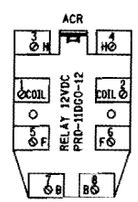

ACR - P&B RELAY, 2FB
(WITH TWO 30A CONTACTS @ 240VAC)
RELAY PART #PRD-11DG0-12

NOTES:

1) ALL WIRING #16 AWG UNLESS OTHERWISE NOTED.

2) ⦚ DENOTES TWISTED PAIR.

PROPOSED
DES. No. _____
RED-IN YELLOW-OUT
AS INSTALLED
DATE _____
BY _____

6' X 6' BUNGALOW

PROPOSED D	M	Y	REVISIONS	D	C	COMPLETED D	M	Y	C

REGION SOUTHERN
SUB. CHICAGO 340
CN

SIGNALS AND COMMUNICATIONS HOMEWOOD | DES. APL
21 OCTOBER 2009 | CH. MKN

GCP 4000/SEAR III
INTERNAL EVENT ANALYZER WITH GFT
1600N / TR 555
GILMAN, IL

CHI-083.20-08

SAFETRAN SYSTEM CORP.
LOUISVILLE DIVISION, LOUISVILLE, KY

SAFETRAN SYSTEMS CORPORATION

DES.: APL	DATE: 23/10/09	JOB NO.: PTCA10196
CKD.: MKN	ISSUE DATE:	EST. NO.:
DRN.: APL	PLAN NO.:	SHEET 8 OF 15
P TIME: 13:04	P DATE: 10-NOV-2009	CAD ID.: CHI-083.20-08

$WATERMARK

NO.	DATE	BY	DESCRIPTION	APP. BY
1				
2				
3				
4				
5				

REVISIONS

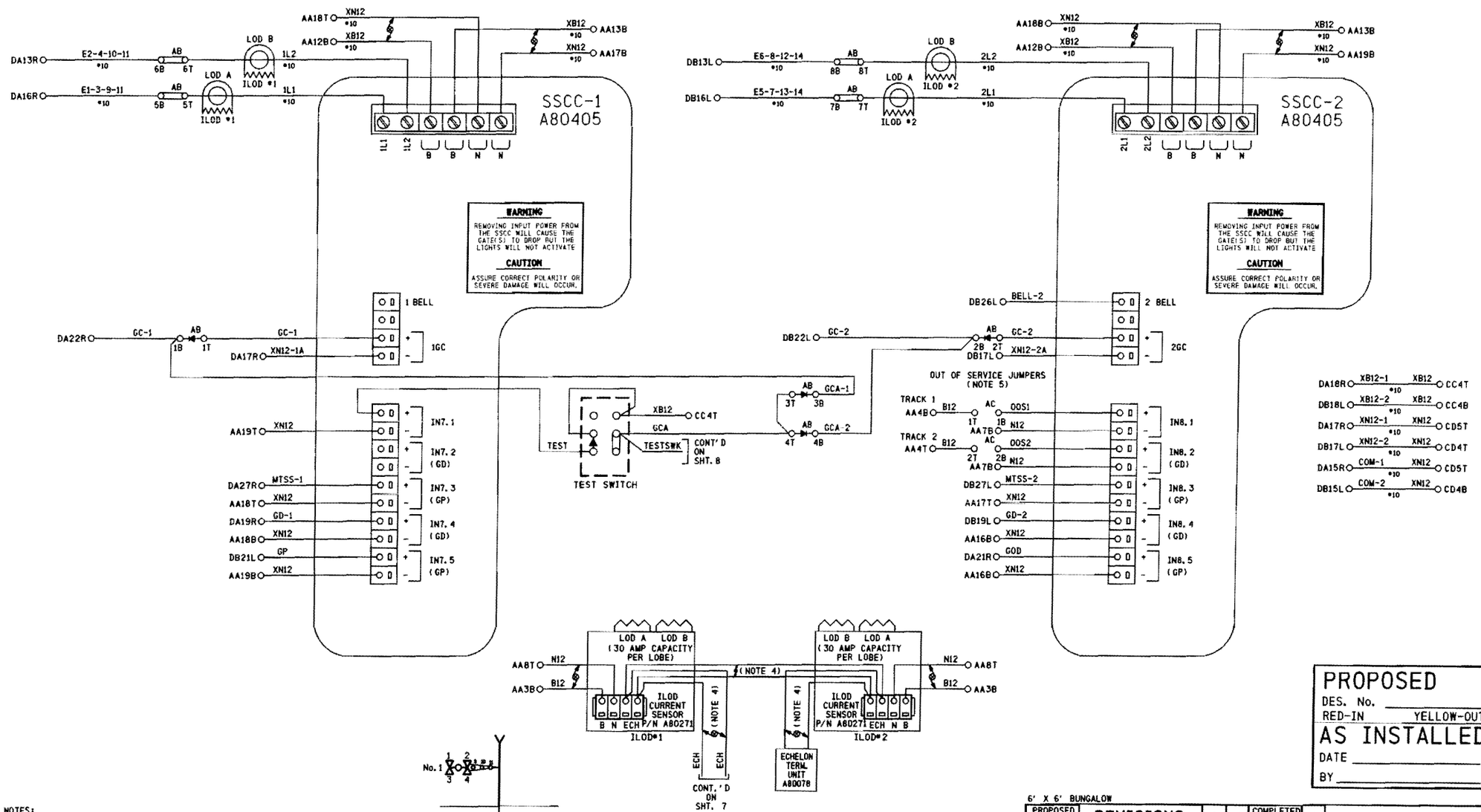

NOTES:

1) DENOTES RECTIFIER : (SAFETRAN #8008A299006)

2) DENOTES TWISTED PAIR.

3) ALL WIRING TO BE #16 AWG MINIMUM UNLESS OTHERWISE NOTED.

4) USE BELDEN CABLE, PART #8461-u500-60 FOR ALL ECHELON AND LAN WIRING.

5) TO TAKE TRACK 1 (T1) OUT OF SERVICE, JUMPER AC1T TO AC1B
TO TAKE TRACK 2 (T2) OUT OF SERVICE, JUMPER AC2T TO AC2B

PROPOSED
DES. No. _____
RED-IN YELLOW-OUT
AS INSTALLED
DATE _____
BY _____

6' X 6' BUNGALOW

PROPOSED D	M	Y	REVISIONS	D	C	COMPLETED D	M	Y	C

REGION SOUTHERN
SUB. CHICAGO 340

SIGNALS AND COMMUNICATIONS HOMEWOOD | DES. APL
21 OCTOBER 2009 | CH. MKN

GCP 4000/SSCCIII!
2-20 AMP CONTROLLERS W/ 2 ILODS
1600N / TR 555
GILMAN, IL

CHI-083.20-09

SAFETRAN SYSTEM CORP.
LOUISVILLE DIVISION, LOUISVILLE, KY

SAFETRAN SYSTEMS CORPORATION

DES.: APL	DATE: 21/10/09	JOB NO.: PICA10196	
CKD.: MKN	ISSUE DATE:	EST. NO.:	
DRN.: APL	PLAN NO.:	SHEET 9 OF 15	
P TIME: 13:04	P DATE: 10-NOV-2009	CAD ID.: CHI-083.20-09	

CHI-083.20-09.dgn
10-NOV-2009

$WATERMARK

chi-083.20-10.dgn
10-NOV-2009

REVISIONS			
NO.	DATE	BY	DESCRIPTION
1			
2			
3			
4			
5			

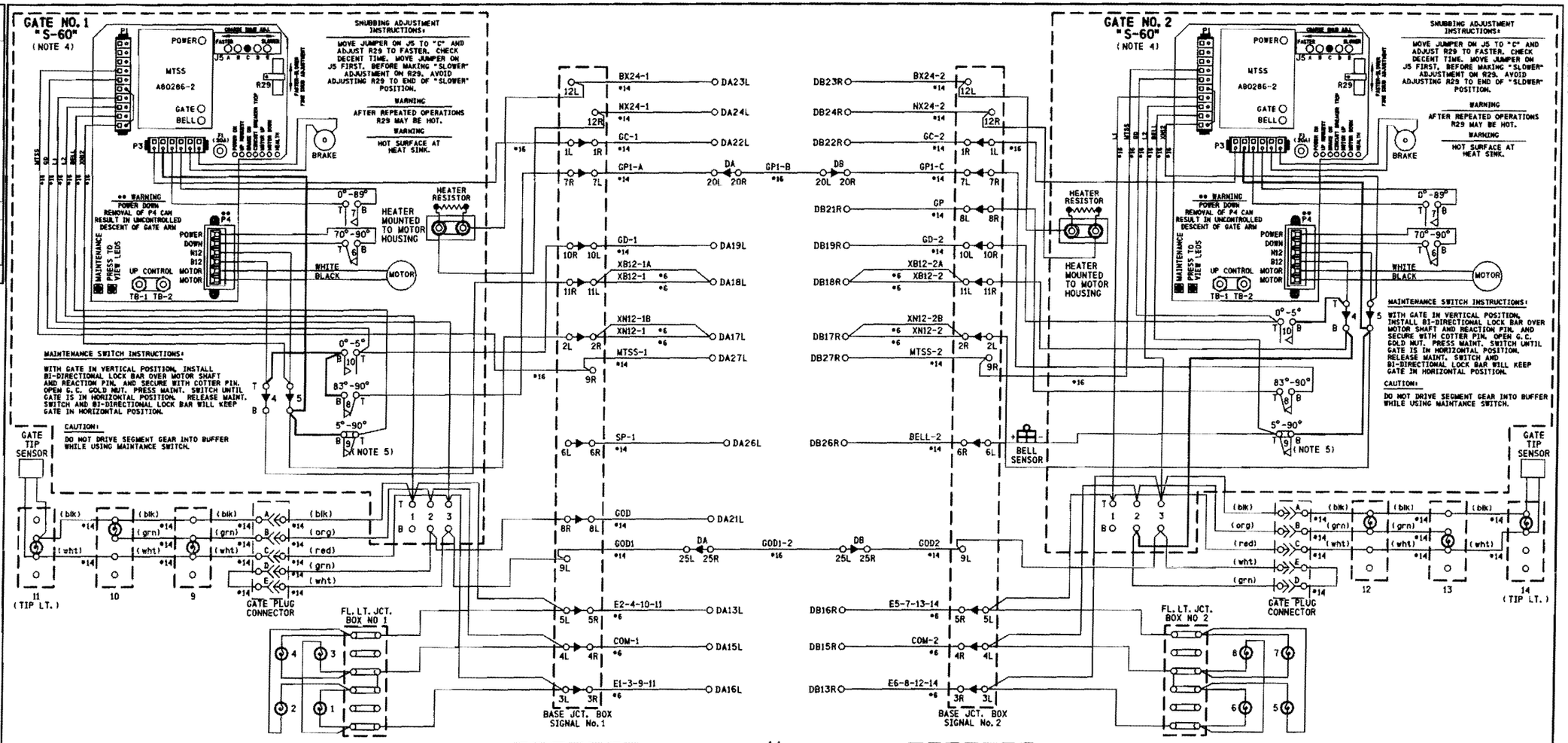

NOTES:

1) ON GATE No. 1 ADD JUMPER BETWEEN TERMINALS:
   ADD JUMPER BETWEEN TERMINAL 4T & 10B,
   ADD JUMPER BETWEEN TERMINAL 10B & 8B
   AND ADD JUMPER BETWEEN TERMINAL 5B & 9B.
2) ON GATE No. 2 ADD JUMPER BETWEEN TERMINALS:
   ADD JUMPER BETWEEN TERMINAL 4T &10B,
   ADD JUMPER BETWEEN TERMINAL 5B & 9B,
   AND ADD JUMPER BETWEEN TERMINAL 4B & 2B.
3) ALL WIRING #10 AWG MINIMUM UNLESS OTHERWISE NOTED. WIRE SIZES SHOWN ARE MINIMUM GAUGE.
4) GATE DESCENT TIME (RELEASE FROM VERTICAL TO FULLY HORIZONTAL) TO BE WITHIN 11 SECONDS.
5) BELL CUT-OUT (5°-90°) WHEN REQUIRED REMOVE STRAP BETWEEN 9B AND 9T.
6) ENSURE ALL TERMINALS HAVE TWO SHOULDER NUTS.

PROPOSED
DES. No. _____
RED-IN YELLOW-OUT
AS INSTALLED
DATE _____
BY _____

6' X 6' BUNGALOW

PROPOSED			REVISIONS	D	C	COMPLETED			C
D	M	Y				D	M	Y	

REGION SOUTHERN
SUB. CHICAGO 340

SIGNALS AND COMMUNICATIONS HOMEWOOD
21 OCTOBER 2009
DES. APL
CH. MKN

GATE MECHANISM CONTROL CIRCUITS
US&S MODEL 95
1600N / TR 555
GILMAN, IL

CHI-083.20-10

SAFETRAN SYSTEM CORP.
LOUISVILLE DIVISION, LOUISVILLE, KY

SAFETRAN SYSTEMS CORPORATION		
DES.: APL	DATE: 23/10/09	JOB NO.: PTCA10196
CKD.: MKN	ISSUE DATE:	EST. NO.:
DRN.: APL	PLAN NO.:	SHEET 10 OF 15
P TIME: 13:04	P DATE: 10-NOV-2009	CAD ID.: CHI-083.20-10

$WATERMARK

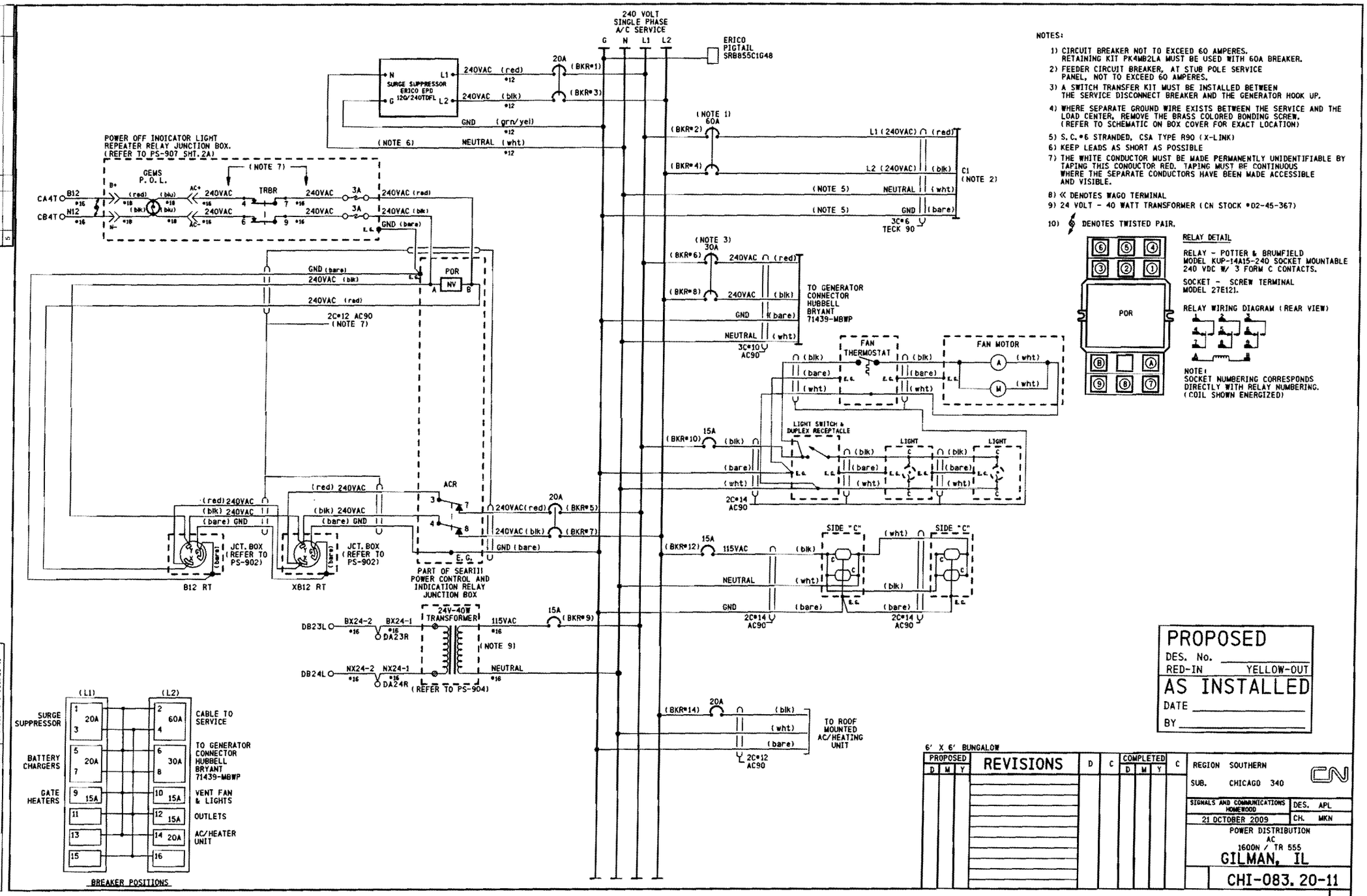

NOTES:

1) CIRCUIT BREAKER NOT TO EXCEED 60 AMPERES. RETAINING KIT PK4MB2LA MUST BE USED WITH 60A BREAKER.
2) FEEDER CIRCUIT BREAKER, AT STUB POLE SERVICE PANEL, NOT TO EXCEED 60 AMPERES.
3) A SWITCH TRANSFER KIT MUST BE INSTALLED BETWEEN THE SERVICE DISCONNECT BREAKER AND THE GENERATOR HOOK UP.
4) WHERE SEPARATE GROUND WIRE EXISTS BETWEEN THE SERVICE AND THE LOAD CENTER, REMOVE THE BRASS COLORED BONDING SCREW. (REFER TO SCHEMATIC ON BOX COVER FOR EXACT LOCATION)
5) S.C.*6 STRANDED, CSA TYPE R90 (X-LINK)
6) KEEP LEADS AS SHORT AS POSSIBLE
7) THE WHITE CONDUCTOR MUST BE MADE PERMANENTLY UNIDENTIFIABLE BY TAPING THIS CONDUCTOR RED. TAPING MUST BE CONTINUOUS WHERE THE SEPARATE CONDUCTORS HAVE BEEN MADE ACCESSIBLE AND VISIBLE.
8) « DENOTES WAGO TERMINAL
9) 24 VOLT - 40 WATT TRANSFORMER (CN STOCK *02-45-367)
10) ⚡ DENOTES TWISTED PAIR.

RELAY DETAIL

RELAY - POTTER & BRUMFIELD MODEL KUP-14A15-240 SOCKET MOUNTABLE 240 VDC W/ 3 FORM C CONTACTS.

SOCKET - SCREW TERMINAL MODEL 27E121.

RELAY WIRING DIAGRAM (REAR VIEW)

NOTE: SOCKET NUMBERING CORRESPONDS DIRECTLY WITH RELAY NUMBERING. (COIL SHOWN ENERGIZED)

PROPOSED
DES. No. _____
RED-IN YELLOW-OUT
AS INSTALLED
DATE _____
BY _____

6' X 6' BUNGALOW

PROPOSED D	M	Y	REVISIONS	D	C	COMPLETED D	M	Y	C

REGION SOUTHERN
SUB. CHICAGO 340
SIGNALS AND COMMUNICATIONS HOMEWOOD
DES. APL
21 OCTOBER 2009
CH. MKN
POWER DISTRIBUTION AC 1600N / TR 555
GILMAN, IL
CHI-083.20-11

SAFETRAN SYSTEM CORP. LOUISVILLE DIVISION, LOUISVILLE, KY

SAFETRAN SYSTEMS CORPORATION
DES.: APL DATE: 21/10/09 JOB NO.: PIC410196
CKD.: MKN ISSUE DATE: EST. NO.:
DRN.: APL PLAN NO.: SHEET 11 OF 15
P TIME: 13:04 P DATE: 10-NOV-2009 CAD ID.: CHI-083.20-11

NO.	DATE	BY	DESCRIPTION	APP. BY
1				
2				
3				
4				
5				

REVISIONS

CHI-083.20-11.dgn
10-NOV-2009

$WATERMARK

NO.	DATE	BY	REVISIONS DESCRIPTION	APP. BY
1				
2				
3				
4				
5				

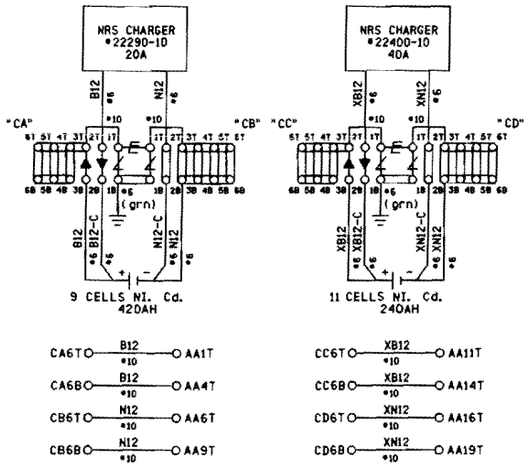

SAFETRAN SYSTEMS CORPORATION	
DES.: APL	DATE: 21/10/09
CKD.: MKN	ISSUE DATE:
DRN.: APL	PLAN NO.:
P TIME: 13:04	P DATE: 10-NOV-2009
JOB NO.: PTCA10196	
EST. NO.:	
SHEET 12 OF 15	
CAD ID.: CHI-083.20-12	

PROPOSED
DES. No. _____
RED-IN YELLOW-OUT
AS INSTALLED
DATE _____
BY _____

6' X 6' BUNGALOW

PROPOSED D	M	Y	REVISIONS	D	C	COMPLETED D	M	Y	C

REGION SOUTHERN
SUB. CHICAGO 340

SIGNALS AND COMMUNICATIONS HOMEWOOD | DES. APL
21 OCTOBER 2009 | CH. MKN

POWER DISTRIBUTION
DC
1600N / TR 555
GILMAN, IL

CHI-083.20-12

SAFETRAN SYSTEM CORP.
LOUISVILLE DIVISION, LOUISVILLE, KY

CHI-083.20-12.dgn
10-NOV-2009

WATERMARK

REVISIONS				
NO.	DATE	BY	DESCRIPTION	APP. BY
1				
2				
3				
4				
5				

Program Report

Location and SIN

DOT Number: 288991W
Milepost Number: 83.20
Site Name: 1600N TR 555

SIN: 762010010016

MCF and Template Selection

MCF Name: GCP-T6X-02-1.mcf
MCF Revision: D21
MCFCRC: 6076E435

Template = 1A:6 Trk BI

Check Numbers

Office Check No. (DT 4.6.0): 6TC97FE6
Office Check Number: 67C97FE6
Config. Check Number: 78832B8A
(Based on MCF Revision D21)

Program

BASIC: module configuration
Track 1 Slot = Track
Track 2/RIO 1 Slot = Track
Track 3 Slot = Not Used
Track 4 Slot = Not Used
Track 5/RIO 2 Slot = Not Used
Track 6/RIO 3 Slot = Not Used
SSCC-1 Slot = SSCC31
SSCC-2 Slot = SSCC31
SEAR Used = Yes

BASIC: MS/GCP operation
Track 1 : MS/GCP Operation = Yes
Track 2 : MS/GCP Operation = Yes

BASIC: Island operation
Track 1 : Island Used = Internal
Track 2 : Island Used = Internal

BASIC: preemption
Preempt Logic = No

BASIC: radio Dax links
Radio DAX link A Used = No
Radio DAX link B Used = No

BASIC: Vital Comms links
Vital Comms link 1 Used = No
Vital Comms link 2 Used = No

PREDICTORS: track 1
Track 1 : Prime Used = Yes
Track 1 : Dax A Used = No
Track 1 : Dax B Used = No
Track 1 : Dax C Used = No
Track 1 : Dax D Used = No
Track 1 : Dax E Used = No
Track 1 : Dax F Used = No
Track 1 : Dax G Used = No

PREDICTORS: track 2
Track 2 : Prime Used = Yes
Track 2 : Dax A Used = No
Track 2 : Dax B Used = No
Track 2 : Dax C Used = No
Track 2 : Dax D Used = No
Track 2 : Dax E Used = No
Track 2 : Dax F Used = No
Track 2 : Dax G Used = No

GCP: track 1
Track 1 : GCP Freq Category = Standard
Track 1 : GCP Frequency = 211 Hz
Track 1 : Approach Distance = 4172 ft
Track 1 : Unl/Bl/Sim-Bidirnl = Bidirnl
Track 1 : GCP Transmit Level = High
Track 1 : Island Connection = Isl1
Track 1 : Island Distance = 120 ft
Track 1 : Computed Distance = 9999 ft
Track 1 : Linearization Steps = 100

GCP: track 1 enhanced det
Track 1 : Inbound PS Sensitivity = High
Track 1 : Speed Limiting Used = Yes
Track 1 : Outbound PS Timer = 20 sec
Track 1 : Trailing Switch Logic = On
Track 1 : Post Joint Detn Time = 15 sec
Track 1 : Adv Appr Predn = No
Track 1 : Cancel Pickup Delay = This Isl

GCP: track 1 prime
Track 1 : Prime Warning Time = 31 sec
Track 1 : Prime Offset Distance = 0 ft
Track 1 : Switch MS EZ Level = 8
Track 1 : Prime MS/GCP Mode = Pred
Track 1 : Prime Pickup Delay = 30 sec
Track 1 : Prime UAX = Not Used

GCP: track 1 pos start
Track 1 : Positive Start = Off
Track 1 : Sudden Shnt Det Used = No
Track 1 : Low EZ Detection Used = No

GCP: track 1 MS Control
Track 1 : MS/GCP Ctrl IP Used = No
Track 1 : MS Sensitivity Level = 0
Track 1 : Compensation Level = 1300
Track 1 : Warn Time-Ballast Comp = High
Track 1 : Low EX Adjustment = 39
Track 1 : Bidirn Dax Passthru = No
Track 1 : False Act on Train Stop = No
Track 1 : EX Limiting Used = Yes
Track 1 : EZ Correction Used = Yes

GCP: track 2
Track 2 : GCP Freq Category = Standard
Track 2 : GCP Frequency = 211 Hz
Track 2 : Approach Distance = 4172 ft
Track 2 : Unl/Bl/Sim-Bidirnl = Bidirnl
Track 2 : GCP Transmit Level = High
Track 2 : Island Connection = Isl2
Track 2 : Island Distance = 120 ft
Track 2 : Computed Distance = 9999 ft
Track 2 : Linearization Steps = 100

GCP: track 2 enhanced det
Track 2 : Inbound PS Sensitivity = High
Track 2 : Speed Limiting Used = Yes
Track 2 : Outbound False Act Lvl = Normal
Track 2 : Outbound PS Timer = 20 sec
Track 2 : Trailing Switch Logic = On
Track 2 : Post Joint Detn Time = 15 sec
Track 2 : Adv Appr Predn = No
Track 2 : Cancel Pickup Delay = This Isl

GCP: track 2 prime
Track 2 : Prime Warning Time = 31 sec
Track 2 : Prime Offset Distance = 0 ft
Track 2 : Switch MS EZ Level = 8
Track 2 : Prime MS/GCP Mode = Pred
Track 2 : Prime Pickup Delay = 30 sec
Track 2 : Prime UAX = Not Used

GCP: track 2 pos start
Track 2 : Positive Start = Off
Track 2 : Sudden Shnt Det Used = No
Track 2 : Low EZ Detection Used = No

GCP: track 2 MS Control
Track 2 : MS/GCP Ctrl IP Used = No
Track 2 : MS Sensitivity Level = 0
Track 2 : Compensation Level = 1300
Track 2 : Warn Time-Ballast Comp = High
Track 2 : Low EX Adjustment = 39
Track 2 : Bidirn Dax Passthru = No
Track 2 : False Act on Train Stop = No
Track 2 : EX Limiting Used = Yes
Track 2 : EZ Correction Used = Yes

ISLAND: track 1
Track 1 : Isl Frequency = 11.5 kHz
Track 1 : Pickup Delay (2s +) = 0 sec
Track 1 : Isl Enable IP Used = No

ISLAND: track 2
Track 2 : Isl Frequency = 13.2 kHz
Track 2 : Pickup Delay (2s +) = 0 sec
Track 2 : Isl Enable IP Used = No

AND: track Anding
AND 1 XR Used = Yes
AND 2 Used = No
AND 3 Used = No
AND 4 Used = No
AND 5 Used = No
AND 6 Used = No
AND 7 Used = No
AND 8 Used = No

AND: AND 1 XR
AND 1 XR Track 1 = Prime
AND 1 XR Track 2 = Prime
AND 1 Enable Used = Yes
And 1 Enable Pickup = 0 sec
AND 1 Enable Drop = 0 sec
AND 1 Wrap Used = No

ADVANCED: MS restart
MS/GCP Restart Used = No

ADVANCED: out of service
OOS Control = OOS IPs

ADVANCED: out of service 2
T1 OOS Control = OOS Input 1
T2 OOS Control = OOS Input 2
T1 OOS Controls = GCP and Island
T2 OOS Controls = GCP and Island

ADVANCED: track wrap circuits
Wrap LOS Timer = 5 sec
Track 1 Wrap Used = No
Track 2 Wrap Used = No

ADVANCED: trk 1 overrides
Track 1 : All Predictors Override Used = No

ADVANCED: trk 2 overrides
Track 2 : All Predictors Override Used = No

ADVANCED: OR logic
OR 1 Used = No
OR 2 Used = No
OR 3 Used = No
OR 4 Used = No

ADVANCED: Internal I/O 1
Pass Thrus = No
Int. 1 Sets = Not Used
Int. 1 Set by = Not Used
Int. 2 Sets = Not Used
Int. 2 Set by = Not Used
Int. 3 Sets = Not Used
Int. 3 Set by = Not Used
Int. 4 Sets = Not Used
Int. 4 Set by = Not Used

ADVANCED: Internal I/O 2
Int. 5 Sets = Not Used
Int. 5 Set by = Not Used
Int. 6 Sets = Not Used
Int. 6 Set by = Not Used
Int. 7 Sets = Not Used
Int. 7 Set by = Not Used
Int. 8 Sets = Not Used
Int. 8 Set by = Not Used

ADVANCED: Internal I/O 3
Int. 9 Sets = Not Used
Int. 9 Set by = Not Used
Int. 10 Sets = Not Used
Int. 10 Set by = Not Used
Int. 11 Sets = Not Used
Int. 11 Set by = Not Used
Int. 12 Sets = Not Used
Int. 12 Set by = Not Used

ADVANCED: Internal I/O 4
Int. 13 Sets = Not Used
Int. 13 Set by = Not Used
Int. 14 Sets = Not Used
Int. 14 Set by = Not Used
Int. 15 Sets = Not Used
Int. 15 Set by = Not Used
Int. 16 Sets = Not Used
Int. 16 Set by = Not Used

ADVANCED: site options
Daylight Savings = On
Units = Standard
Maint Call Rpt IP Used = No
Emergency Activate IP = No
EZ/EX Logging = Change
EZ/EX Point Change = 3

SSCC
Gates Used = Yes
SSCCI+2 OPs Coupled = Yes
Min Activation = 21 sec
Rmt Activation Cancel = 3 min
Bell On Gate Rising = No
Mute Bell On Gate Down = No
SSCCIV Controller Used = No

SSCC: 1
SSCC-1 Activation = AND 1 XR
SSCC-1 Gate Delay = 4 sec
SSCC-1 Number of GPs = 1
SSCC-1 Number of GDs = 1
SSCC 1 : Flash Rate = 60
SSCC 1 : Low Battery Detection = No
SSCC 1 : Flash Sync = master
SSCC 1 : Invert Gate Output = No
SSCC 1 : Lamp Neutral Test = Off
Aux-1 Xng Ctrl Used = No

SSCC: 2
SSCC-2 Activation = AND 1 XR
SSCC-2 Gate Delay = 4 sec
SSCC-2 Number of GPs = 0
SSCC-2 Number of GDs = 1
SSCC 2 : Flash Rate = 60
SSCC 2 : Low Battery Detection = No
SSCC 2 : Flash Sync = slave
SSCC 2 : Invert Gate Output = No
SSCC 2 : Lamp Neutral Test = Off
Aux-2 Xng Ctrl Used = No

OUTPUT: assignment page 1
OUT 1.1 = Not Used
OUT 1.2 = Not Used
OUT 2.1 = Not Used
OUT 2.2 = Not Used

INPUT: assignment page 1
IN 1.1 = Not Used
IN 1.2 = Not Used
IN 2.1 = Not Used
IN 2.2 = Not Used

IO: assignment SSCC
OUT GC 1 = Gate Output 1
OUT GC 2 = Gate Output 2
IN 7.1 = AND 1 XR Enable
IN 7.2 = Not Used
IN 7.3 = Not Used
IN 7.4 = GD 1.1
IN 7.5 = GP 1.1
IN 8.1 = Out Of Service IP 1
IN 8.2 = Out Of Service IP 2
IN 8.3 = Not Used
IN 8.4 = GD 2.1
IN 8.5 = Not Used

SEAR
SEAR Subnode = 99
DI 1 = General1
DI 2 = Gnd Flt Tester 1
Rly 1 = Ground Fault Test
Rly 2 = AC Control

SEAR: Inputs
SP 2.1 = POK 1
SP 3.1 = Not Used
SP 4.1 = Not Used
SP 5.1 = Not Used
SP 6.1 = Not Used

SEAR: slot 1-4 inputs
IN 1.1 = Not Used
IN 1.2 = Not Used
IN 2.1 = Not Used
IN 2.2 = POK 2
IN 3.1 = Not Used
IN 3.2 = Not Used
IN 4.1 = Not Used
IN 4.2 = Not Used

SEAR: Inputs slot 5
IN 5.1 = Not Used
IN 5.2 = Not Used

SEAR: Inputs slot 6
IN 6.1 = Not Used
IN 6.2 = Not Used

SEAR: slot T-8 inputs
IN 7.2 = Not Used
IN 7.3 = TSS 1
IN 8.3 = TSS 2
IN 8.5 = General 2

SITE: programming
Radio Subnode = 1
Field Password = Off
Low Battery Enabled = Off

Configuration Package File

Filename: 288991W.pac

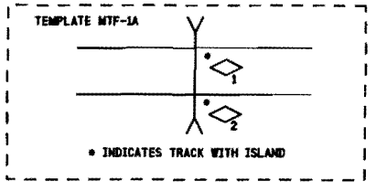

NOTES:

1) DISTANCE(S) TO BE VERIFIED AT INSTALLATION. INDICATE SELECTED PROGRAMMED VALUE IF DIFFERENT THAN SHOWN. REFER TO 4000 GCP INSTRUCTION/INSTALLATION MANUAL FOR PROGRAMMING PARAMETERS.

2) PROGRAM TEXT HIGHLITED IN RED INDICATES 4000 PROGRAM MODIFICATIONS TO DEFAULT PROGRAM VALUES.

3) EACH CONSTANT WARNING DEVICE SYSTEM TO BE PROGRAMMED TO CONVERT TO A MOTION SENSOR 300 FEET FROM EDGE OF ROAD TRAVELLED WAY.
SHUNT TRACK 300 FEET FROM EDGE OF ROAD TRAVELLED WAY AND NOTE "EZ" VALUE.
PROGRAM EACH SYSTEM WITH THE INDICATED "EZ" VALUE +2.

4) VERIFY SET TIMER VALUE TO MATCH ACTUAL TRAIN MOVEMENT WITHIN THE CROSSING APPROACH CIRCUITS.

PROPOSED
DES. No. _____
RED-IN YELLOW-OUT
AS INSTALLED
DATE _____
BY _____

PROPOSED			REVISIONS	D	C	COMPLETED			C
D	M	Y				D	M	Y	

REGION SOUTHERN
SUB. CHICAGO 340
CN

SIGNALS AND COMMUNICATIONS HOMEWOOD | DES. APL
21 OCTOBER 2009 | CH. MKN

GCP 4000
PROGRAM INFORMATION
1600N / TR 555
GILMAN, IL

CHI-083.20-13

SAFETRAN SYSTEM CORP.
LOUISVILLE DIVISION LOUISVILLE KY

SAFETRAN SYSTEMS CORPORATION		
DES. : APL	DATE: 25/10/09	JOB NO.: PTCA0196
CHD. : MKN	ISSUE DATE:	EST. NO.:
DRN. : APL	PLAN NO.:	SHEET 13 OF 15
P TIME: 13:18	P DATE: 01-DEC-2009	CAD ID.: CHI-083.20-13

CHI-083.20-13.dgn
01-DEC-2009

$WATERMARK

NO.	DATE	BY	REVISIONS DESCRIPTION	APP. BY
1				
2				
3				
4				
5				

TO CONFIGURE SEARII & SEARIII PRESS SITE SETUP KEY. USE ARROW KEYS TO MAKE SELECTION, PRESS ENTER AFTER SELECTION HAS BEEN MADE.

STAGE 1

PROGRAM MENU QUESTIONS	PROGRAM	OPTIONS/RANGE
DATE/TIME?	CURRENT DATE/TIME	CURRENT DATE/TIME
AUTOMATIC DST ADJUSTMENT?	YES	YES, NO
TIME ZONE?	CENTRAL	EASTERN, CENTRAL, MOUNTAIN, PACIFIC, ALASKA, HAWAII, ATLANTIC, SASKATCHEWAN, NEW FOUNLAND
SITE NAME?	1600N / TR 555	STREET NAME
MILE POST?	83.20	MILEAGE
DOT/CROSSING IS #?	288 991W	
TESTER TYPE?	CROSSING	CROSSING, WAYSIDE
DATE FORMAT?	dd-mm-yyyy	mm-dd-yyyy, dd-mm-yyyy
TEMPERATURE FORMAT?	CELSIUS	FAHRENHEIT, CELSIUS
INDICATE HOLD?	0	SECONDS
SITE TYPE?		NO COM, BULLHORN, DIALUP, NODE, COLLECTOR
SITE ATCS ADDRESS?		7.RRR.LLL.GGG.99.01
OFFICE ATCS ADDRESS?		2.RRR.NN.DDDD
PRIMARY HOP ADDR? (FOR NODE USE)		7.RRR.LLL.GGG.00.01
BACKUP HOP ADDR1? (FOR NODE USE)		7.RRR.LLL.GGG.00.01
BACKUP HOP ADDR2? (FOR NODE USE)		7.RRR.LLL.GGG.00.01
POLL ID? (FOR COLLECTOR USE)		1-99
MODE? (FOR COLLECTOR USE)		GEN/ATCS, GENISYS
WAMS/XID? (FOR COLLECTOR USE)		ENABLED, DISABLE
OFFICE COMM. DEVICE? (FOR COLLECTOR USE)		DIRECT (RS232) MCM (RS232) MCM (ECHELON) SREAD SPEC (ECHELON) DIAL MODEM (RS232) 5200 RADIO (RS422)
OFFICE PHONE NUMBER? (FOR COLLECTOR USE)		PHONE NUMBER OF WAMS
INIT STRING? (FOR COLLECTOR USE)		OPTIONAL HAYES MODEM INITIALIZATION STRING
FIELD COMM. DEVICE? (FOR COLLECTOR USE)		VHF COMM. (ECHELON) VHF COMM. (RS232) SPREAD SPEC (ECHELON) SPREAD SPEC (RS232)
USER PORT?	57600, 8, N, 1, N	BAUD, DATA BITS, PARITY, STOP BITS, FLOW CONTROL
AUX PORT?	9600, 8, N, 1, N	BAUD, DATA BITS, PARITY, STOP BITS, FLOW CONTROL

YOU WILL NOW SEE A MESSAGE "PLEASE WAIT COMPILING STAGE 1"
CONTINUE TO NEXT PROGRAM MENU QUESTIONS.

STAGE 2

QUESTION	PROGRAM	SELECTION 1 (MINIMUM)	SELECTION 2 (MAXIMUM)	CONDITION FOR MENU DISPLAY
RESET NAMES / MODULES ?	NO	YES	NO	ALWAYS
RAILROAD NUMBER ?	360 (IC)	1	999	ALWAYS
CROSSING CONFIGURATION ?	NORMAL	NORMAL	SPLIT GATE (NOTE 3)	ALWAYS
ENTRANCE GATES ?	2	0	8	ALWAYS
GATE POSTION FAIL TIME (SECONDS) ?	N/A	10	60	GATES > 0
BATTERY BANKS ?	2	1	3	ALWAYS
BATT MON USED ?	NO	NO	YES	ALWAYS
INTERNAL CROSSING CONTROLLERS ?	2	0	2	ALWAYS
EXTERNAL CROSSING CONTROLLERS ?	0	0	2	CROSSING CONTROLLER = YES
VHF COMMUNICATOR ?	YES	YES	NO	ALWAYS
ALLOW DTMF CONTROL ?	NO	NO	YES	RAILROAD = 360 (IC)
DIGIT #1 ?	N/A	0	9	ALLOW DTMF CONTROL = YES
DIGIT #2 ?	N/A	0	9	ALLOW DTMF CONTROL = YES
DIGIT #3 ?	N/A	0	9	ALLOW DTMF CONTROL = YES
DIGIT #4 ?	N/A	0	9	ALLOW DTMF CONTROL = YES
DIGIT #5 ?	N/A	0	9	ALLOW DTMF CONTROL = YES
DTMF TIME-OUT ?	180 (NOTE 2)	30	240	ALLOW DTMF CONTROL = YES
DTMF OUTPUT 2 DELAY ?	0	0	20	ALLOW DTMF CONTROL = YES
ILOD MODULES ?	2	0	4	ALWAYS
ANY LED BULBS USED ?	YES	NO	YES	ILOD MODULES > 0
AUTO INSPECTION ?	NO	YES	NO	ALWAYS
BELL SENSORS ?	1	0	8	ALWAYS
BELL SENSORS TSS1 ?	NO	NO	YES	BELL SENSORS > 0
BELL SENSORS TSS2 ?	YES	NO	YES	BELL SENSORS > 0
BELL SENSORS TSS3 ?	NO	NO	YES	BELL SENSORS > 0

STAGE 2 CONT'D

QUESTION	PROGRAM	SELECTION 1 (MINIMUM)	SELECTION 2 (MAXIMUM)	CONDITION FOR MENU DISPLAY
BELL SENSORS TSS4 ?	NO	NO	YES	BELL SENSORS > 0
BELL SENSORS TSS5 ?	NO	NO	YES	BELL SENSORS > 0
BELL SENSORS TSS6 ?	NO	NO	YES	BELL SENSORS > 0
BELL SENSORS TSS7 ?	NO	NO	YES	BELL SENSORS > 0
BELL SENSORS TSS8 ?	NO	NO	YES	BELL SENSORS > 0
BELL ON ?	N/A	GATES LOWERING		BELL SENSORS > 0
		GATES MOVING		
		ALWAYS		
GFT'S ?	YES	YES	NO	ALWAYS
BATTERIES ON GFT1 ?	2	1	2	GFT'S = YES
GATE TIP SENSORS ?	YES	YES	NO	GATES > 0
RTU ?	NO	NO	YES	ALWAYS
VHF VOICE CHANNEL ?	1 (NOTE 2)	1	8	VHF COMMUNICATOR = YES
VHF DATA CHANNEL ?	1 (NOTE 2)	1	8	VHF COMMUNICATOR = YES
USE CELL MODEM NON-CRITICAL FEATURE ?	NO	NO	YES	ALWAYS
FULL APPROACH MOVE ALARMS ?	ACTIVATE	ACTIVATE		ALWAYS
		DO NOT ACTIVATE		

YOU WILL NOW SEE A MESSAGE "PLEASE WAIT COMPILING STAGE 2"
CONTINUE TO NEXT PROGRAM MENU QUESTIONS.

STAGE 3

PROGRAM MENU QUESTIONS	PROGRAM
EDIT DIGITAL INPUTS	NO
EDIT BATTERIES	NO
EDIT RELAYS	NO
EDIT TEST LEDS	NO
EDIT ILOD SENSORS	NO
EDIT VHF SETTINGS	NO
GCP4K ATCS SUBNODE?	16

SAVE CONFIGURATION

NOTES:

1) ASSIGNED DTMF CODES:
- ACTIVATE CROSSING (NORTH TRACK - T1) N/A 11#
- DE-ACTIVATE CROSSING (NORTH TRACK - T1) N/A 10#
- ACTIVATE CROSSING (SOUTH TRACK - T2) N/A 21#
- DE-ACTIVATE CROSSING (SOUTH TRACK - T2) N/A 20#
- ACTIVATE CROSSING (MAINTENANCE) N/A 31#
- DE-ACTIVATE CROSSING (MAINTENANCE) N/A 30#

2) INDICATE SELECTION IN SPACE PROVIDED.

3) ADDITIONAL OPTIONS: DUAL CROSSING, EXTERNAL ENTRANCE GATE CONTROLLERS.

PROPOSED
DES. No. _____
RED-IN YELLOW-OUT
AS INSTALLED
DATE _____
BY _____

SEARIII EXECUTIVE 9V725 REV. A01U, SEARIII APPLICATION 9V864 REV. A01J

PROPOSED D	M	Y	REVISIONS	D	C	COMPLETED D	M	Y	C

REGION SOUTHERN
SUB. CHICAGO 340
SIGNALS AND COMMUNICATIONS HOMEWOOD
DES. APL
21 OCTOBER 2009
CH. MKN

GCP 4000/SEAR III
SETUP AND PROGRAM
1600N / TR 555
GILMAN, IL

CHI-083.20-14

SAFETRAN SYSTEM CORP.
LOUISVILLE DIVISION, LOUISVILLE, KY

SAFETRAN SYSTEMS CORPORATION
DES.: APL DATE: 23/10/09 JOB NO.: PTCA10196
CKD.: MKN ISSUE DATE: EST. NO.:
DRN.: APL PLAN NO.: SHEET 14 OF 15
P TIME: 13:04 P DATE: 10-NOV-2009 CAD ID.: CHI-083.20-14

CHI-083.20-14.dgn
10-NOV-2009

$WATERMARK

chi-083.20-15.dgn
10-NOV-2009

REVISIONS				
NO.	DATE	BY	DESCRIPTION	APP. BY
1				
2				
3				
4				
5				

CALIBRATION HISTORY

INITIAL SET UP BY: _____ DATE: _____

DC VOLTAGE READINGS AFTER CALIBRATION				CALIBRATION HISTORY										LINEARIZATION HISTORY (NOTE 1)							
				EZ/EX VALUES (TRACK UNOCCUPIED)				HARD WIRE SHUNT AT TERMINATION SHUNT						HARD WIRE SHUNT AT 50 PERCENT POINT OF SHUNT							
				EZ		EX		EZ		EX		50 PERCENT OF EZ VALUE		NO LINEARIZATION				LINEARIZATION COMPLETE			
														EZ		EX		STEP#		EZ	
				NRML	STBY	NRML	STBY	NRML	STBY	NRML	STBY	NRML	STBY	NRML	STBY	NRML	STBY	NRML	STBY	NRML	STBY
T1	Z1*	NORTH	TRACK 1																		
	Z2*	SOUTH	TRACK 1																		
T2	Z1*	NORTH	TRACK 2																		
	Z2*	SOUTH	TRACK 2																		

CALIBRATION HISTORY

INITIAL SET UP BY: _____ DATE: _____

DC VOLTAGE READINGS AFTER CALIBRATION				CALIBRATION HISTORY										LINEARIZATION HISTORY (NOTE 1)							
				EZ/EX VALUES (TRACK UNOCCUPIED)				HARD WIRE SHUNT AT TERMINATION SHUNT						HARD WIRE SHUNT AT 50 PERCENT POINT OF SHUNT							
				EZ		EX		EZ		EX		50 PERCENT OF EZ VALUE		NO LINEARIZATION				LINEARIZATION COMPLETE			
														EZ		EX		STEP#		EZ	
				NRML	STBY	NRML	STBY	NRML	STBY	NRML	STBY	NRML	STBY	NRML	STBY	NRML	STBY	NRML	STBY	NRML	STBY
T1	Z1*	NORTH	TRACK 1																		
	Z2*	SOUTH	TRACK 1																		
T2	Z1*	NORTH	TRACK 2																		
	Z2*	SOUTH	TRACK 2																		

CALIBRATION HISTORY

INITIAL SET UP BY: _____ DATE: _____

DC VOLTAGE READINGS AFTER CALIBRATION				CALIBRATION HISTORY										LINEARIZATION HISTORY (NOTE 1)							
				EZ/EX VALUES (TRACK UNOCCUPIED)				HARD WIRE SHUNT AT TERMINATION SHUNT						HARD WIRE SHUNT AT 50 PERCENT POINT OF SHUNT							
				EZ		EX		EZ		EX		50 PERCENT OF EZ VALUE		NO LINEARIZATION				LINEARIZATION COMPLETE			
														EZ		EX		STEP#		EZ	
				NRML	STBY	NRML	STBY	NRML	STBY	NRML	STBY	NRML	STBY	NRML	STBY	NRML	STBY	NRML	STBY	NRML	STBY
T1	Z1*	NORTH	TRACK 1																		
	Z2*	SOUTH	TRACK 1																		
T2	Z1*	NORTH	TRACK 2																		
	Z2*	SOUTH	TRACK 2																		

NOTE:

1) **SET UP APPROACH LENGTH AND LINEARIZATION CALIBRATION**
VERIFY THAT "ENHANCED DETECTION" MODE IS PROGRAMMED "OFF" BEFORE ATTEMPTING LINEARIZATION PROCEDURES.

PROPOSED
DES. No. _____
RED-IN YELLOW-OUT
AS INSTALLED
DATE _____
BY _____

PROPOSED D	M	Y	REVISIONS	D	C	COMPLETED D	M	Y	C

REGION SOUTHERN
SUB. CHICAGO 340
CN
SIGNALS AND COMMUNICATIONS HOMEWOOD
DES. APL
21 OCTOBER 2009
CH. MKN
GCP 4000
CALIBRATION HISTORY
1600N / TR 555
GILMAN, IL
CHI-083.20-15
15

SAFETRAN SYSTEM CORP.
LOUISVILLE DIVISION, LOUISVILLE, KY

SAFETRAN SYSTEMS CORPORATION
DES.: APL DATE: 21/10/09 JOB NO.: PICA19196
CKD.: MKN ISSUE DATE: EST. NO.:
DRN.: APL PLAN NO.: SHEET 15 OF 15
P TIME: 13:04 P DATE: 10-NOV-2009 CAD ID.: CHI-083.20-15

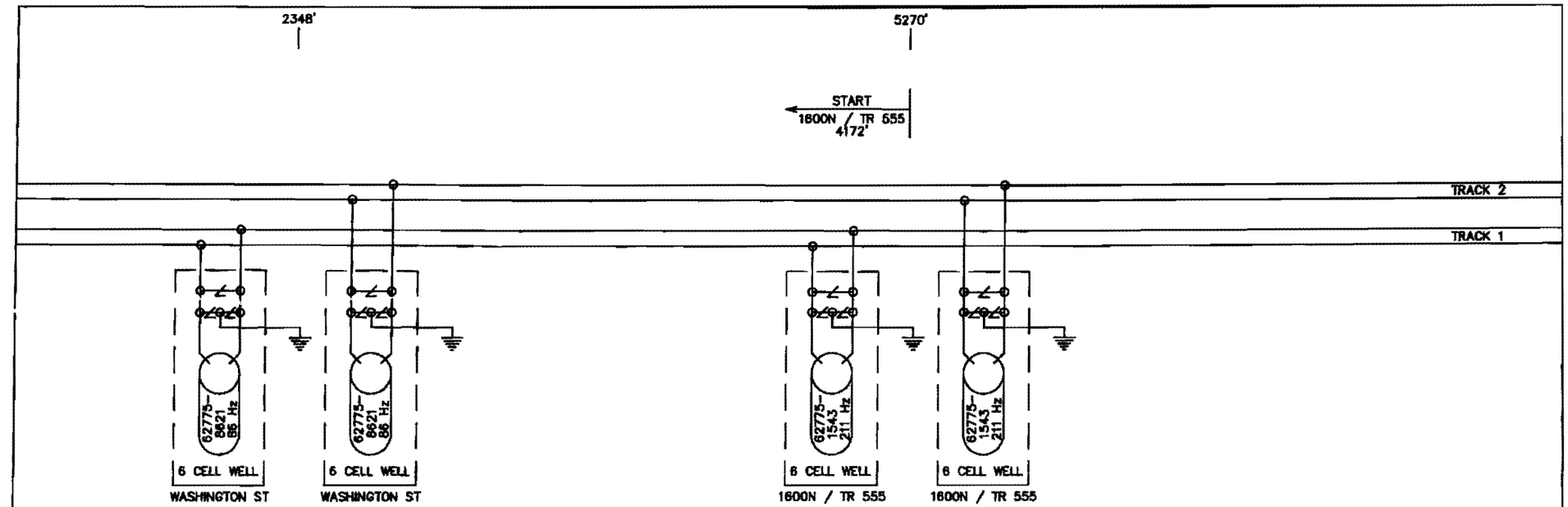

NOTE:

DENOTES MULTI-FREQ. NARROW BAND SHUNT 62775-1543.

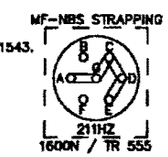

10-21-09

PROPOSED
DES. No.
RED=IN BLUE=OUT

AS INSTALLED
DATE
BY

REGION NORTHERN	Illinois Central	COMMUNICATIONS & SIGNALS, ENGINEERING DEPARTMENT
DISTRICT CHICAGO		
FILENAME [illegible]	SD 1008 C ONARGA	MP 83.50 TO MP 84.00
DESIGNER MKH DATE 2-23-00		
SHEET NO. 1 OF 1		

5 4 3 2 9-1-97 1 REVISIONS