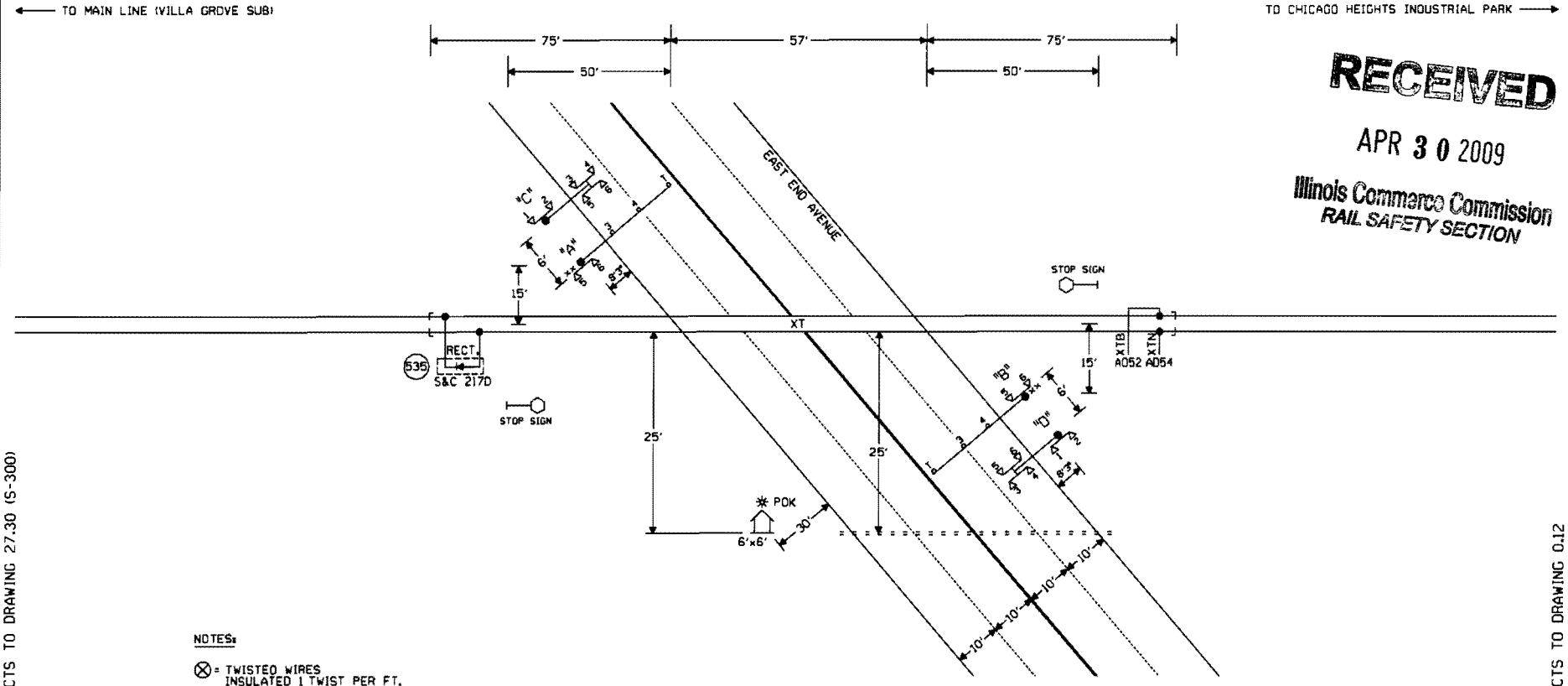

RECEIVED
APR 30 2009
Illinois Commerce Commission
RAIL SAFETY SECTION

CONNECTS TO DRAWING 27.30 (S-300)

CONNECTS TO DRAWING 0.12

NOTES:

⊗ = TWISTED WIRES
INSULATED 1 TWIST PER FT.
ALL TRACK WIRES 2C. #6

TRANSMITTER AND RECEIVER LEADS TO BE SEPARATED BY AT LEAST 12" IN TRENCH. LENGTHS SHOULD NOT EXCEED MANUFACTURES RECOMMENDATION.

TOP OF FOUNDATION TO BE AT SAME ELEVATION AS THE SURFACE OF THE TRAVELED WAY & NO MORE THAN 4" ABOVE THE SURFACE OF THE GROUND.

ALL BUNGALOW WIRING TO BE #16 AWG FLEX UNLESS OTHERWISE SPECIFIED EXCEPT ALL GROUND WIRE TO BE #6 AWG FLEX OR LARGER.

ALL WIRING IN GATE MECHANISM TO BE #10 "AWG FLEX".

REFER TO UP STANDARD DWG FOR BUNGALOW GROUNDING.

PORTABLE GENERATOR EXTENSION CORD FOR 240V TO 240V IS PROVIDED AS WELL AS A 120V TO 240V ADAPTER.

ALL LIGHTS TO BE 12" ROUNDELS.

= = = = = = 4" X 70' CONDUIT

LIGHTS: LED LIGHTS

GATE A: 28'
GATE B: 28'
CANT C: 15'
CANT D: 13'

xx = BELL

CRTU: MICROBURST

W(S) ←—○—→ E(N)

CONSTRUCTION NOTES:

1.) RELOCATE THE EXISTING POWER LINE ON THE WEST SIDE OF THE CROSSING FOR CLEARANCE WITH THE GATE AND CANTILEVER.

2.) RELOCATE THE EXISTING CRTU INTO THE NEW CROSSING BUNGALOW.

3.) RELOCATE THE EXISTING CANTILEVERS AS SHOWN AND REMOVE THE EXISTING FOUNDATIONS. UPGRADE THE LIGHTS TO LED'S AND INSTALL NEW CABLE.

CHICAGO HEIGHTS, ILLINOIS
EAST END AVENUE
M.P. 0.13
CHICAGO HEIGHTS IND LEAD
(C.H.T.T. UNIT #2)
D.O.T.#862 645N

NEW SHEET

6-30-08 RELOCATE CANTS AND INSTALL NEW GATES w/ISLAND CIRCUIT IN A NEW BUNGALOW AT EAST END AVE, MP 0.13. AFE 88154 GRK WITT/JJF	MODIFICATION LEVEL		UNION PACIFIC QUALITY PRODUCTIVITY SAFETY SIGNAL DESIGN	DES: WITT	UNION PACIFIC RAILROAD	DATE 6-30-08
	Q. A. LAST LEVEL CHECKED	DQ		DIG: WITT	CHICAGO HEIGHTS, ILLINOIS	SHEET 1
	LAST LEVEL MOD THIS TYPICAL	DQ		CHK: B.C.H.	HIGHWAY CROSSING SIGNALS	DWG 0.13
	LAST LEVEL BY DESIGNER	DQ		A.F.E. 88154	CONTROL CIRCUITS	S-305
	CHANGED FROM TYPICAL?	Y		ID= 0305013.1X	Office of Sr AVP Engineering - Signal/TCO Omaha, Nebraska	

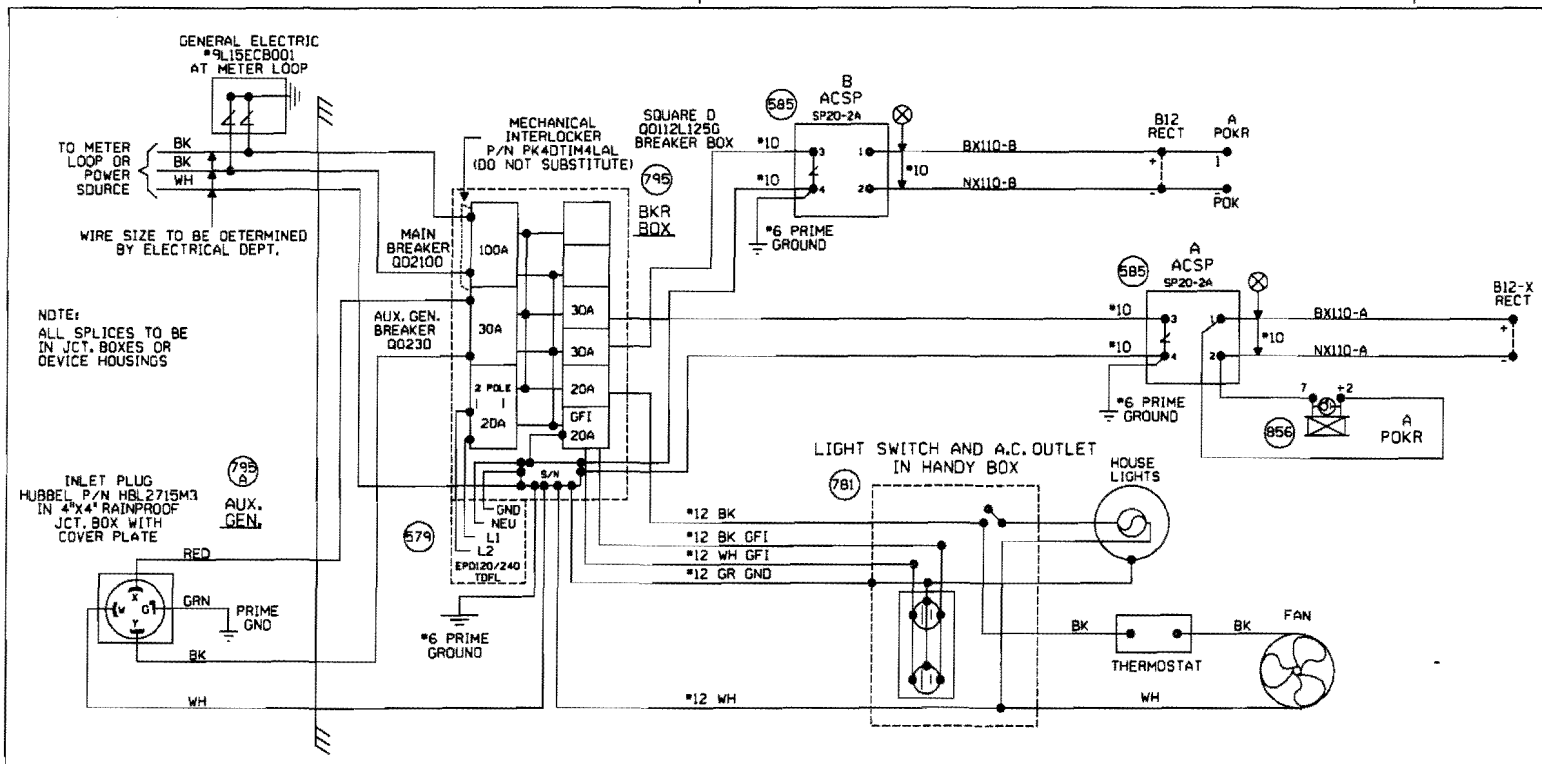

CHICAGO HEIGHTS, ILLINOIS
EAST END AVENUE
M.P. 0.13
CHICAGO HEIGHTS IND. LEAD
(C.H.T.T. UNIT #2)
D.O.T.#862 645N

NEW SHEET

6-30-08 RELOCATE CANTS AND INSTALL NEW GATES w/ISLAND CIRCUIT IN A NEW BUNGALOW AT EAST END AVE, MP 0.13 AFE 88154 GRK WITT/JJF	MODIFICATION LEVEL		UNION PACIFIC QUALITY PRODUCTIVITY SAFETY SIGNAL DESIGN	DES: WITT	**UNION PACIFIC RAILROAD**	DATE 8-30-08
	Q.A. LAST LEVEL CHECKED	DO		DIG: WITT	CHICAGO HEIGHTS, ILLINOIS	SHEET 2
	LAST LEVEL MOD THIS TYPICAL	DO		CHK: GRK	HIGHWAY CROSSING SIGNALS	DWG 0.13
	LAST LEVEL BY DESIGNER	DO		A.F.E. 88154	CONTROL CIRCUITS	S-305
	CHANGED FROM TYPICAL?	Y		ID= 0305013.2X	Office of Sr AVP Engineering - Signal/TCO Omaha, Nebraska	

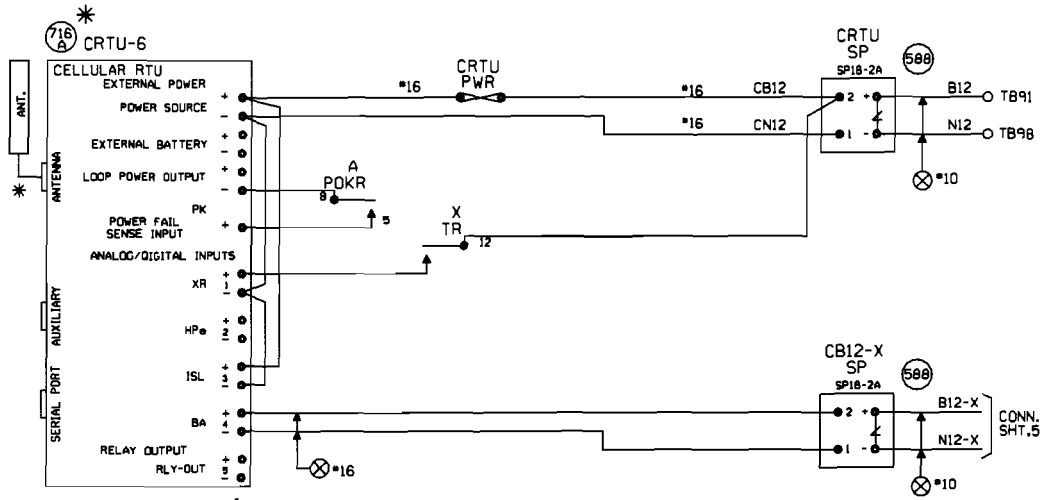

NOTES:

ALL DIODES 1N5060 OR 1N4004 UNLESS OTHERWISE NOTED.

✱ MOUNT ANTENNA ON TOP OF HOUSE. INSTALL ANTENNA CABLE AND CHOKE PER TECH BULLENTIN #99-0015-00

ALL WIRES #18 UNLESS OTHERWISE NOTED.

ALL UNUSED 'NC' INPUTS MUST BE TIED HIGH TO BATTERY

ALL UNUSED ANALOG INPUTS MUST BE TIED HIGH TO BATTERY

ALL UNUSED 'NO' INPUTS MUST BE DISCONNECTED

NORMAL STATE FOR ANALOG CHANNELS IS EQUAL TO THE STORED NOMINAL VOLTAGE +120% OR -81%

CRTU FRONT PANEL DISPLAY CHART INDICATES NORMAL STATE

■ DIGITAL INPUT HIGH, OR POWER FAIL INPUT CLOSED □ DIGITAL INPUT LOW, OR POWER FAIL INPUT OPEN

□ L ■ L ← LATCH IS SET BECAUSE CRTU DETECTED AN ALARM CONDITION

12.06V L ←

'sRUN MODE' 'sRUN MODE-SILENT' ← CRTU RADIO IS DISABLED. REPROGRAM CRTU WITH LAPTOP.

MEASURE NOMINAL VOLTAGE ON ANALOG INPUT MODULE BETWEEN 1 +30VIN AND 7 VINCOM

ANALOG AND AC INPUT MODULES AND SURGE PROTECTORS MUST BE MOUNTED LESS THAN 18" FROM CRTU

ANALOG MODULES CONVERT DC VOLTAGE TO A SQUARE WAVE. A WORKING ANALOG MODULE WILL HAVE 4.5VDC TO 8.0VDC BETWEEN 5VOUT+ AND 6VOUT-. WHERE, 0VOLTS = 0HZ OUT, 30VOLTS = 10KHZ OUT, AND 15VOLTS = 5KHZ OUT MAKE SURE CRTU IS PROGRAMMED WITH CALIBRATION SETTINGS.

CRTU CH4 CAN BE CONNECTED TO EITHER SP18 OR EQUIPMENT SIDE OF MOSAI TAB 565

UNIT INSTALLATION AND SETUP

R.R. SITE ID WHERE: SSSS = 4 CHARACTER SUBDIVISION ID. FILL WITH PRECEDING ZEROS AS REQUIRED. THE MAIN TRACK SUBDIVISION ID* IS IN THE CURRENT TIMETABLE. INDUSTRIAL LEADS, LEASED, AND LEAD TRACKS LISTED WITHIN THE SUBDIVISION MAY HAVE THEIR OWN UNIQUE SUBDIVISION ID*. ALWAYS REFER TO CURRENT PRINTED COPY OF THE TIMETABLE.
LLLLLLLL = 8 CHARACTERS USE ODT* AT CROSSINGS, AND
WOLLLLLL = USE 'WO' THEN MP* AT WAYSIDE LOCATIONS.
EXAMPLE = 0785WO1801.5UT
HBLLLLLL = USE 'HB' THEN MP* AT HBD SITES.
EXAMPLE = OIDO-HB55.52TX
THE MP* MUST USE A DECIMAL POINT TO SEPARATE NUMBERS. FILL WITH PRECEDING DASHES AS REQUIRED.
AA = 2 CHARACTER STATE NAME FOR ALL LOCATIONS. MUST BE 14 CHARACTERS LONG, NO SPACES ALLOWED.

SITE IDENTIFIER: SSSSLLLLLLLLAA	0041-862645NIL
OPERATION TO RESUME:	RUN
SIGNAL STRENGTH dBm	
CARRIER ID	
FIRMWARE VERSION	02.03.012
BOOT VERSION:	
CMM VERSION:	
SERIAL NUMBER	03-02989-2701
MIN ASSIGNMENT	
ESN: (MICROBURST ONLY)	
CONFIGURATION NET	MICROBURST
SILENCE INTERVAL	60 MINUTES
HEALTHCHECK INTERVAL	EVERY 2 DAYS
ALARM DEFER DELAY	240 MINUTES (4 HOURS)
SIGNAL STATUS	
SCADANET STATUS	
CALIBRATION CONSTANT CH1	
CALIBRATION CONSTANT CH2	
CALIBRATION CONSTANT CH3	
CALIBRATION CONSTANT CH4	
CALIBRATION CONSTANT PS	

FIELD PROVIDES: SAMPLED NOMINAL VOLTAGES, SCADANET STATUS CALIBRATION CONSTANTS, SERIAL NUMBER, AND SIGNAL STATUS.

CHANNEL SETUP - STANDARD CONFIGURATION 15:XR,HPe,ISL,Ba

CHANNEL NORMAL STATE	SENSE (NO/NC)	NAME FUNCTION	RECOGNITION DELAY SECONDS ACTIVE	RECOGNITION DELAY SECONDS NORMAL	RETURN TO NORMAL	REPORTING MODE	ALARM LINKED CHANNEL	ALARM LINKED CRITERIA	EVENT LOGGING ENABLED OPTIONS
POWER FAIL (CH5) ■	POWER FAIL DETECT NO	PFin-PK AC POWER FAIL	7,200 ALARM	300 NORMAL	ENABLED	ALERT	DISABLED	N/A	
CH1 ■	DIGITAL INPUT NO	CH1-XR XR DOWN TO LONG	1,800 ALARM	1 NORMAL	ENABLED	ALERT	DISABLED	N/A	
CH2 ■	DIGITAL INPUT NO	CH2-HPe LIGHT OUT GATES NOT UP/DOWN XING CNTRLR FAILED	120 ALARM	10 NORMAL	ENABLED	ALERT	DISABLED	N/A	
CH3 ■	DIGITAL INPUT NC	CH3-ISL ISLAND OCCUPIED DAX, PREEMPT WARNING TIME	1 ACTIVE	1 NORMAL	DISABLED	STATUS ONLY	DISABLED	N/A	DIGITAL EVENTS
CH4 STORED NOMINAL VOLTAGE	ANALOG INPUT N/A	CH4-Ba/V BATTERY MONITOR BATTERY LOW	600 ALARM	1200 NORMAL	ENABLED	ALERT W/UPDATE	DISABLED	N/A	CH1-XR CH3-ISL
POWER SOURCE (CH6)	ANALOG INPUT N/A	PS-Ba/V BATTERY MONITOR BATTERY LOW	600 ALARM	1200 NORMAL	ENABLED	ALERT W/UPDATE	DISABLED	N/A	

ANALOG CHANNEL	USEFUL RANGE VOLTS LOW	USEFUL RANGE VOLTS HIGH	DISPLAYED RANGE VOLTS LOW	DISPLAYED RANGE VOLTS HIGH	RELATIVE ALARM POINT LOW	RELATIVE ALARM POINT HIGH	ABSOLUTE ALARM POINT LOW	ABSOLUTE ALARM POINT HIGH	AUTOMATIC UPDATE INTERVAL	STORED NOMINAL VOLTAGE	SAMPLED NOMINAL VOLTAGE
CH4	0.0	30.00	0.0	30.00	81%	120%	10.0	29.0	14 DAYS	12.69	
POWER SOURCE	0.0	30.00	0.0	30.00	81%	120%	10.0	29.0	14 DAYS	12.69	

RELAY OUTPUT	NAME	ACTIVE	NORMAL	PULSE DURATION	
	RLY-OUT	SET-UP-OPEN	CLR-ON-CLOSE	15 SECONDS	Std Cfg Ver: 2.3.3 REV'D 9-20-02

MAINTENANCE OPERATIONS

TO START OR ABORT ANY PROCEDURE

1. PRESS THE 'CANCEL' BUTTON FIRST

WHEN RESPONDING TO A CALL, PUT THE CRTU IN THE 'SILENCE ALARMS' MODE

1. PRESS 'SELECT' AND THEN '+ ARROW' BUTTON UNTIL
   DISPLAY: ACTION? SILENCE ALARMS
2. PRESS THE 'SELECT' BUTTON TWICE
3. CORRECT PROBLEM AND SIMULATE NORMAL TRAIN MOVEMENT THROUGH THE LOCATION
4. EXAMINE EACH CHANNEL ON THE CRTU
5. PRESS THE '+/- ARROW' BUTTON VERIFY ALL CHANNELS INDICATE A NORMAL STATE NORMAL STATES ARE ON THE CHANNEL SETUP CHART

CLEAR TIMERS, LATCHES AND SEND ALL NORMAL

1. DO STEPS #1 - #5 ABOVE, AND PRESS 'CANCEL'.
2. PRESS 'SELECT' AND THEN '- ARROW' BUTTON UNTIL
   DISPLAY: ACTION? SERVICE MODE
3. PRESS 'SELECT' AGAIN TO RESET TIMERS, AND IF
   DISPLAY: SERVICE MODE ALL NORMAL
4. PRESS 'SELECT' AGAIN TO CLEAR LATCHES, AND SEND ALL NORMAL. SKIP STEPS #5-#6.
5. HOWEVER, IF ALARMS ARE NOT CLEARED,
   DISPLAY: SERVICE MODE ALARMS PENDING/PRESENT
6. PRESS 'CANCEL', CORRECT PROBLEM AND REPEAT STEPS #2 THRU #5 UNTIL ALL NORMAL SENT.

TO CANCEL THE 'SILENCE ALARMS' MODE

1. PRESS 'SELECT' AND THEN '+ ARROW' BUTTON UNTIL
   DISPLAY: ACTION? CANCEL SILENCE
2. PRESS THE 'SELECT' BUTTON AGAIN

EXAMINE & SET BATTERY VOLTAGE NOMINAL VALUE

1. PRESS THE '+ ARROW' OR '- ARROW' BUTTON UNTIL THE DESIRED CHANNEL IS DISPLAYED.
   DISPLAY: PS-Ba: 13.83V NORMAL
2. VERIFY THE DISPLAYED READING WITH A DIGITAL VOLTMETER
3. PRESS THE 'SELECT' BUTTON, AND THE CRTU DISPLAY WILL SWITCH BETWEEN CURRENT/SAVED NOMINAL VOLTAGE VALUES.
   DISPLAY: NOMINAL ON #67 (CURRENT) 13.83
   DISPLAY: SAVED NOMINAL 6 (STORED) 12.89
4. PRESS THE 'SELECT' BUTTON AND THE CURRENT OR 'NOMINAL ON' VALUE WILL BE SAMPLED AND STORED AS THE 'SAVED NOMINAL' VALUE
5. VERIFY THE 'NOMINAL ON' AND 'SAVED NOMINAL' VALUES ARE EQUIVALENT. REPEAT STEPS #1 THRU #3 & PRESS THE 'CANCEL' BUTTON.

✱ = **TO BE INSTALLED IN THE FIELD.**

NEW SHEET

CHICAGO HEIGHTS, ILLINOIS
EAST END AVENUE
M.P. 0.13
CHICAGO HEIGHTS IND. LEAD
(C.H.T.T. UNIT #2)
O.O.T.#862 645N

6-30-08 RELOCATE CANTS AND INSTALL NEW GATES W/ISLAND CIRCUIT IN A NEW BUNGALOW AT EAST END AVE, MP 0.13. AFE 88154 GRK WITT/JJF

MODIFICATION LEVEL	
Q.A. LAST LEVEL CHK'D.	DG
LAST LEVEL MOD. THIS TYP.	DG
LAST LEVEL BY DESIGNER.	DG
CHANGED FROM TYP.? Y/N	Y

UNION PACIFIC SIGNAL DESIGN

DES: WITT
DIG: WITT
CHK: GRK
A.F.E. 88154
ID: 0305013.3X

UNION PACIFIC RAILROAD
CHICAGO HEIGHTS, ILLINOIS
HIGHWAY CROSSING SIGNALS
CONTROL CIRCUITS
Office of Sr AVP Engineering - Signal/TCO Omaha, Nebraska

DATE 8-30-08
SHEET 3
DWG 0.13
S-305

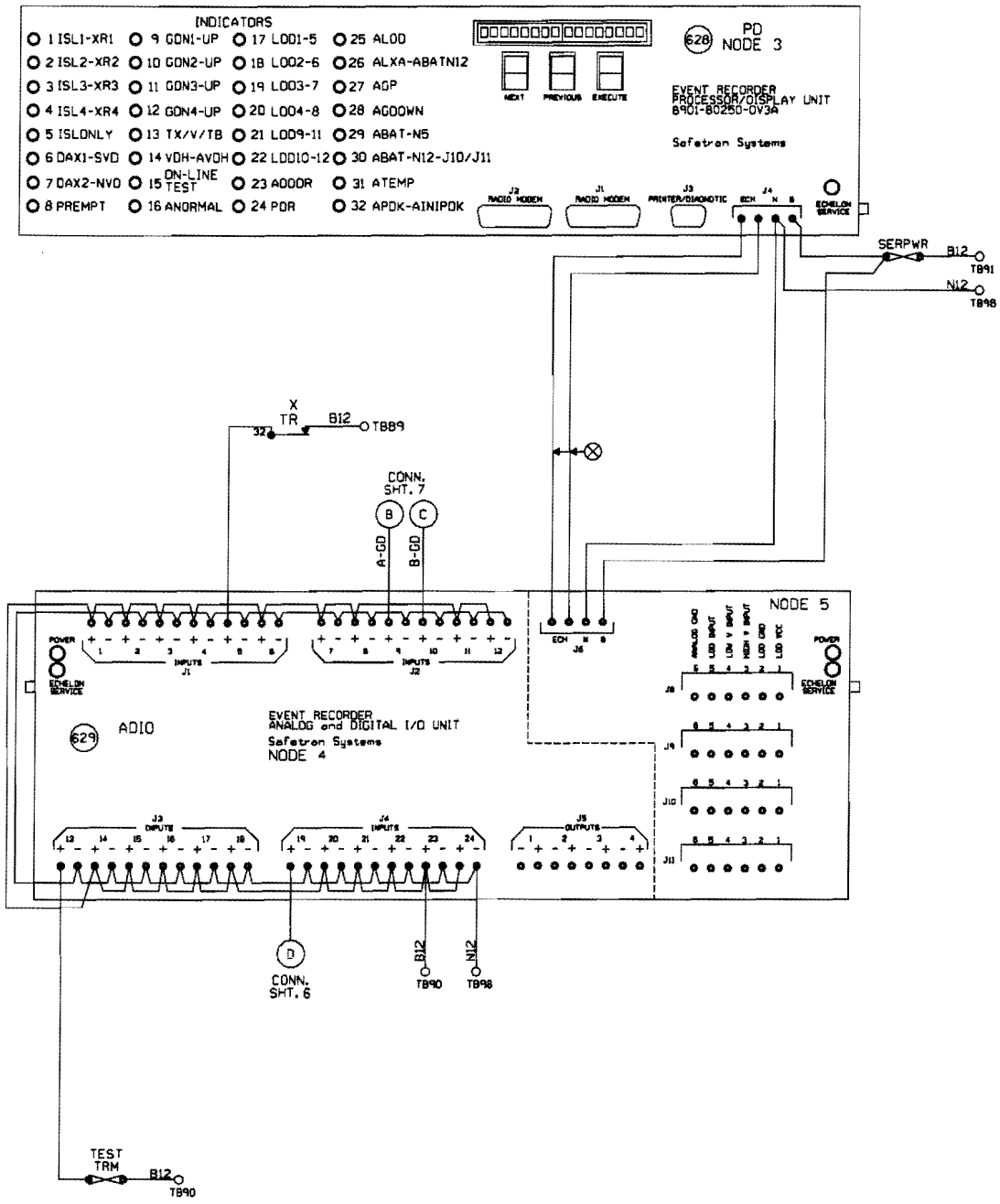

NODE #4
DIGITAL INPUTS:
1.ISL1
2.ISL2
3.ISL3
4.ISL4
5.ISONLY
6.DAX1-SVD
7.DAX2-NVD
8.PREMPT
9.GDWN1
10.GDWN2
11.GDWN3
12.GDWN4
13.TX/V/TB
14.VDH
15.XR1
16.XR2
17.XR3
18.XR4
19.GP1
20.GP2
21.GP3
22.GP4
23.PDK/DO
24.POR

NODE #4
DIGITAL OUTPUTS:
J5-1 ALRM1
J5-2 ALRM2
J5-3 HEALTH
J5-4 DOORBUZ

NODE #5
ANALOG INPUTS:
J8-LOD1
J9-LOD2
J10-LOD3
J11-LOD4
N8-BATT5

GCP NODES:
6 GCP NORMAL
16 GCP STANDBY

SER NOTES:
1. JUMPER ALL UNUSED DIGITAL '+' INPUTS TO THE B TERMINAL
2. JUMPER ALL UNUSED DIGITAL '-' INPUTS TO THE N TERMINAL.
3. DO NOT JUMPER INPUTS WITH DIFFERENT VOLTAGE REFERENCES TOGETHER.
4. WHEN L.E.D. #15 IS LIT THE SER IS IN TEST MODE.

⊗ = TWISTED WIRES.

CHICAGO HEIGHTS, ILLINOIS
EAST END AVENUE
M.P. 0.13
CHICAGO HEIGHTS IND. LEAD
(C.H.T.T. UNIT #2)
D.O.T.#862 645N

NEW SHEET

6-30-08 RELOCATE CANTS AND INSTALL NEW GATES w/ISLAND CIRCUIT IN A NEW BUNGALOW AT EAST END AVE. MP 0.13. AFE 88154 GRK WITT/JJF	MODIFICATION LEVEL		UNION PACIFIC SAFETY SIGNAL DESIGN	DES: WITT	UNION PACIFIC RAILROAD	DATE 6-30-08
	Q. A. LAST LEVEL CHECKED	DO		DIG: WITT	CHICAGO HEIGHTS, ILLINOIS	SHEET 4
	LAST LEVEL MOD THIS TYPICAL	DO		CHK: GRK	HIGHWAY CROSSING SIGNALS	DWG 0.13
	LAST LEVEL BY DESIGNER	DO		A.F.E. 88154	CONTROL CIRCUITS	S-305
	CHANGED FROM TYPICAL?	Y		ID= 0305013.4X	Office of Sr AVP Engineering - Signal/TCO Omaha, Nebraska	

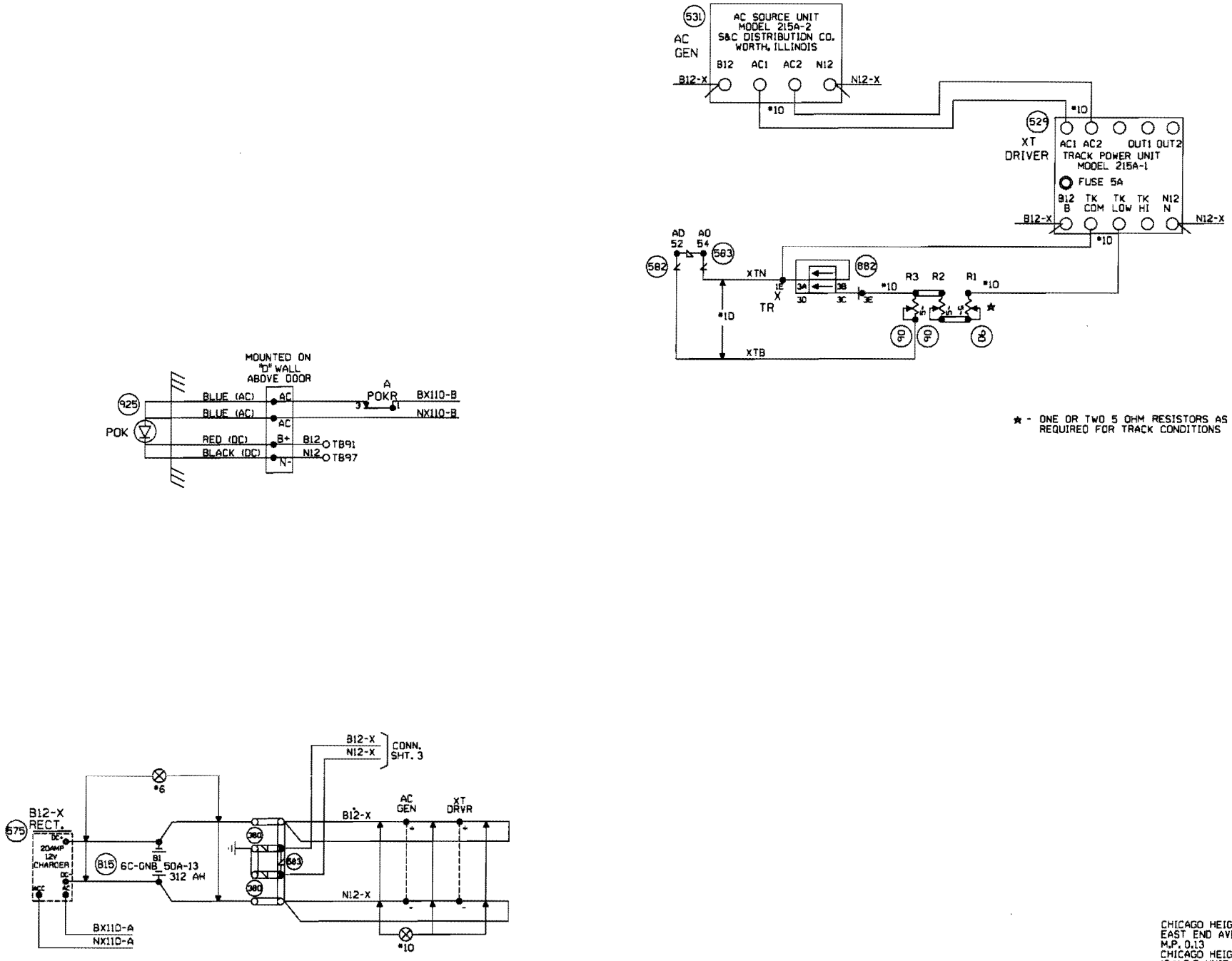

CHICAGO HEIGHTS, ILLINOIS
EAST END AVENUE
M.P. 0.13
CHICAGO HEIGHTS IND. LEAD
(C.H.T.T. UNIT #2)
D.O.T.#862 645N

NEW SHEET

6-30-08 RELOCATE CANTS AND INSTALL NEW GATES w/ISLAND CIRCUIT IN A NEW BUNGALOW AT EAST END AVE, MP 0.13. AFE 88154 GRK WITT/JJP	MODIFICATION LEVEL		UNION PACIFIC QUALITY PRODUCTIVITY SAFETY SIGNAL DESIGN	DES: WITT	UNION PACIFIC RAILROAD	DATE 6-30-08
	Q.A. LAST LEVEL CHECKED	DQ		DIG: WITT	CHICAGO HEIGHTS, ILLINOIS	SHEET 5
	LAST LEVEL MOD THIS TYPICAL	DQ		CHK: GRK	HIGHWAY CROSSING SIGNALS	DWG 0.13
	LAST LEVEL BY DESIGNER	DQ		A.F.E. 88154	CONTROL CIRCUITS	S-305
	CHANGED FROM TYPICAL?	Y		ID: 0305013.5X	Office of Sr AVP Engineering - Signal/TCO Omaha, Nebraska	
	av 82, 81, 88 4K ACOCEL 4					

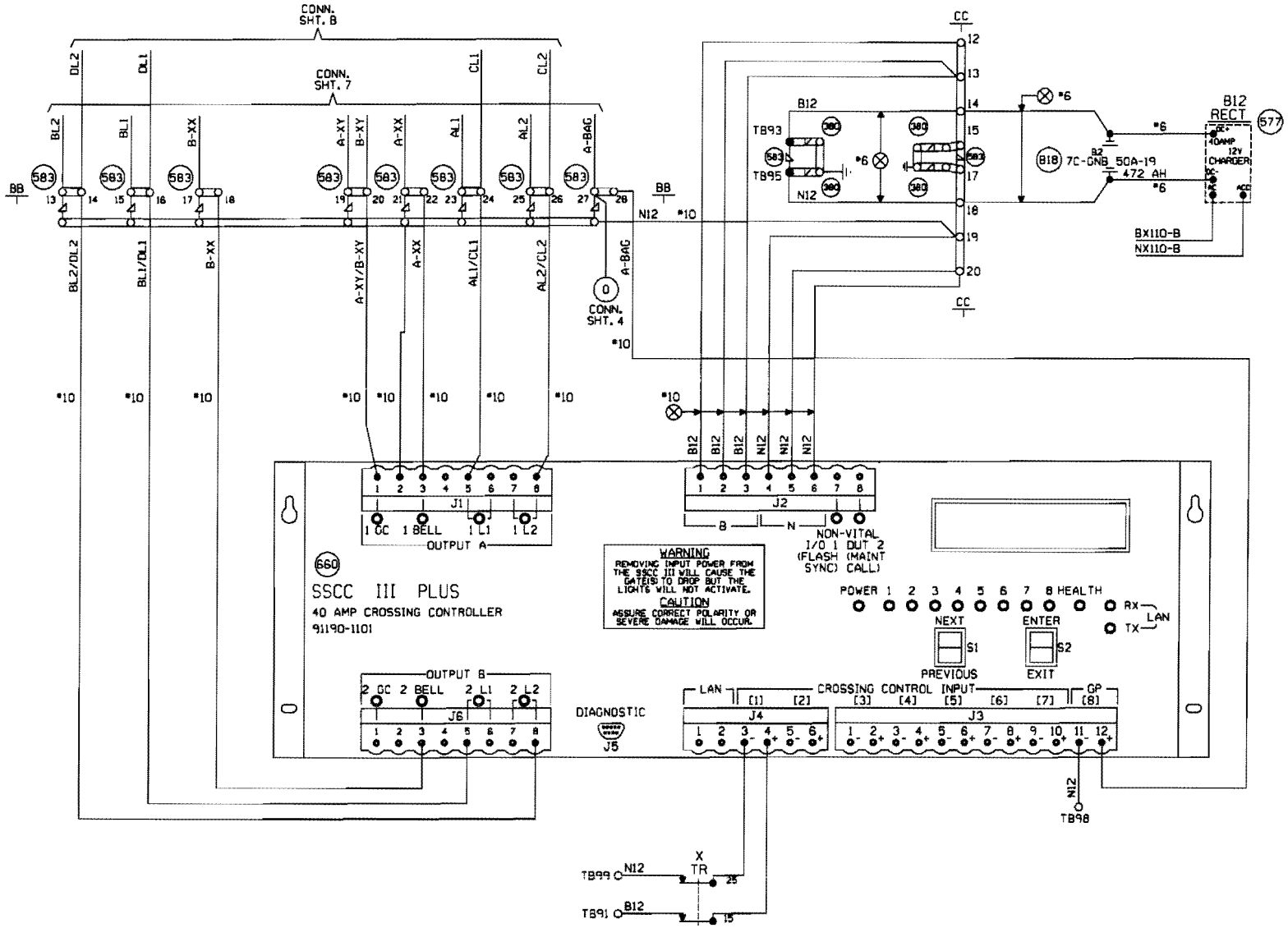

IMPORTANT

THE PROGRAM MCF AND ID LISTED BELOW MUST BE ENTERED IN THE PROGRAM SETUP ROUTINE FOR THIS SOLID STATE CROSSING CONTROLLER TO FUNCTION PROPERLY.

PROGRAM MCF: BASICPLS
PROGRAM ID: 087

CHICAGO HEIGHTS, ILLINOIS
EAST END AVENUE
M.P. 0.13
CHICAGO HEIGHTS IND. LEAD
(C.H.T.T. UNIT #2)
D.D.T.#862 645N

NEW SHEET

6-30-08 RELOCATE CANTS AND INSTALL NEW GATES w/ISLAND CIRCUIT IN A NEW BUNGALOW AT EAST END AVE. MP 0.13. AFE 88154 GRK WITT/JJP	MODIFICATION LEVEL		UNION PACIFIC QUALITY PRODUCTIVITY SAFETY SIGNAL DESIGN	DES: WITT	UNION PACIFIC RAILROAD	DATE 6-30-08
	Q.A. LAST LEVEL CHECKED	DO		DIG: WITT	CHICAGO HEIGHTS, ILLINOIS	SHEET 6
	LAST LEVEL MOD THIS TYPICAL	DO		CHK: GRK	HIGHWAY CROSSING SIGNALS	DWG 0.13
	LAST LEVEL BY DESIGNER	DO		A.F.E. 88154	CONTROL CIRCUITS	S-305
	CHANGED FROM TYPICAL?	Y		ID# 0305013.6X	Office of Sr. AVP Engineering - Signal/TCO Omaha, Nebraska	
	4K ACDCSSCC.5					

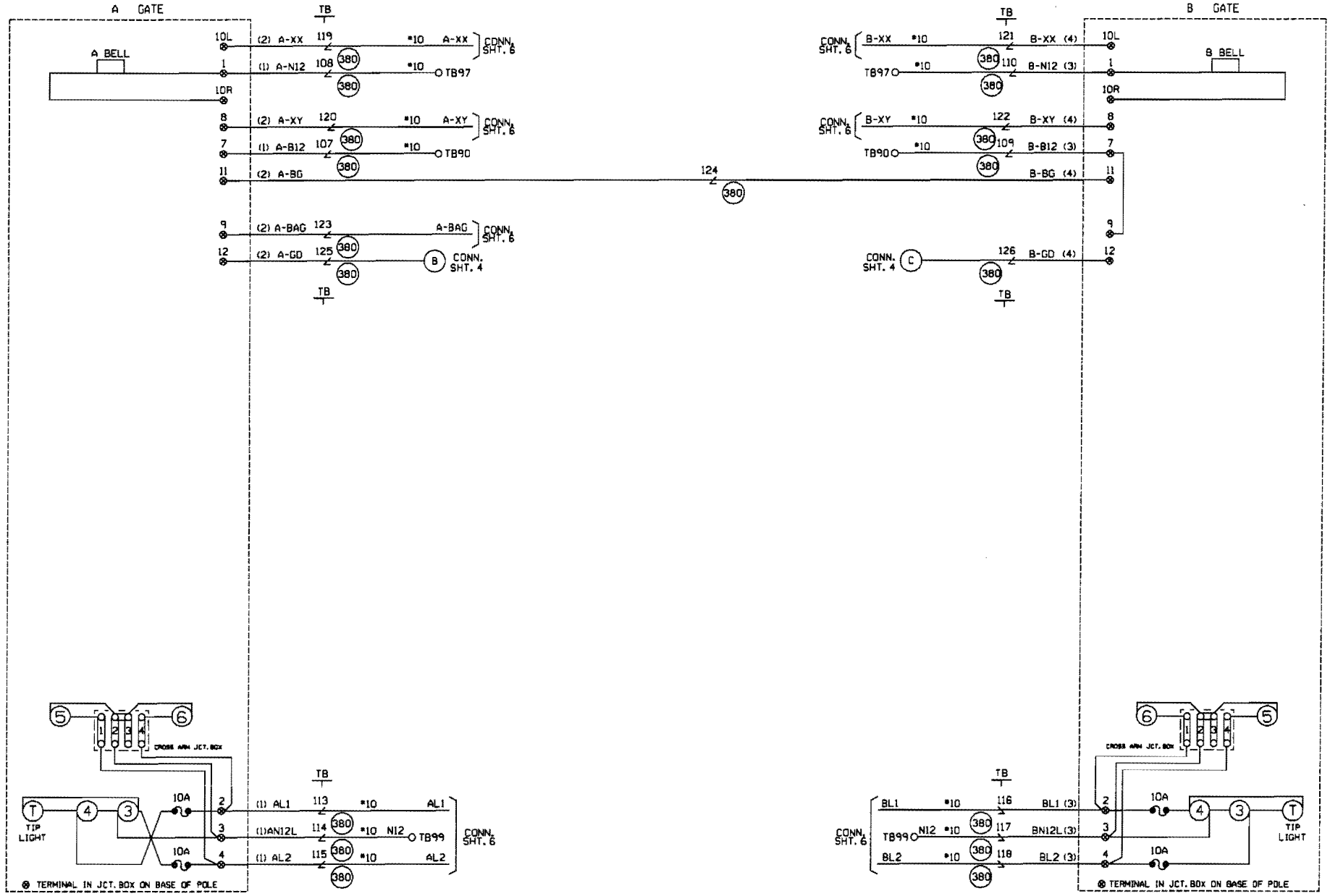

CABLE TABULATION

CABLE NO. 1 5C. NO.6 U.G.B.T.
CABLE NO. 2 7C. NO.14 U.G.B.T.
CABLE NO. 3 5C. NO.6 U.G.B.T.
CABLE NO. 4 7C. NO.14 U.G.B.T.

NEW SHEET

CHICAGO HEIGHTS, ILLINOIS
EAST END AVENUE
M.P. 0.13
CHICAGO HEIGHTS IND. LEAD
(C.H.T.T. UNIT *2)
D.O.T.*862 645N

6-30-08	RELOCATE CANTS AND INSTALL NEW GATES w/ISLAND CIRCUIT IN A NEW BUNGALOW AT EAST END AVE. MP 0.13. AFE 88154 GRK WITT/JJF

MODIFICATION LEVEL	
O. A. LAST LEVEL CHECKED	00
LAST LEVEL MOD THIS TYPICAL	00
LAST LEVEL BY DESIGNER	00
CHANGED FROM TYPICAL?	Y

UNION PACIFIC — SAFETY — SIGNAL DESIGN

DESI	WITT
DIGI	WITT
CHKI	GRK
A.F.E.	88154
ID: 0305013.7X	

UNION PACIFIC RAILROAD

CHICAGO HEIGHTS, ILLINOIS
HIGHWAY CROSSING SIGNALS
CONTROL CIRCUITS

Office of Sr AVP Engineering - Signal/TCO Omaha, Nebraska

DATE 6-30-08	
SHEET 7	
DWG 0.13	
S-305	

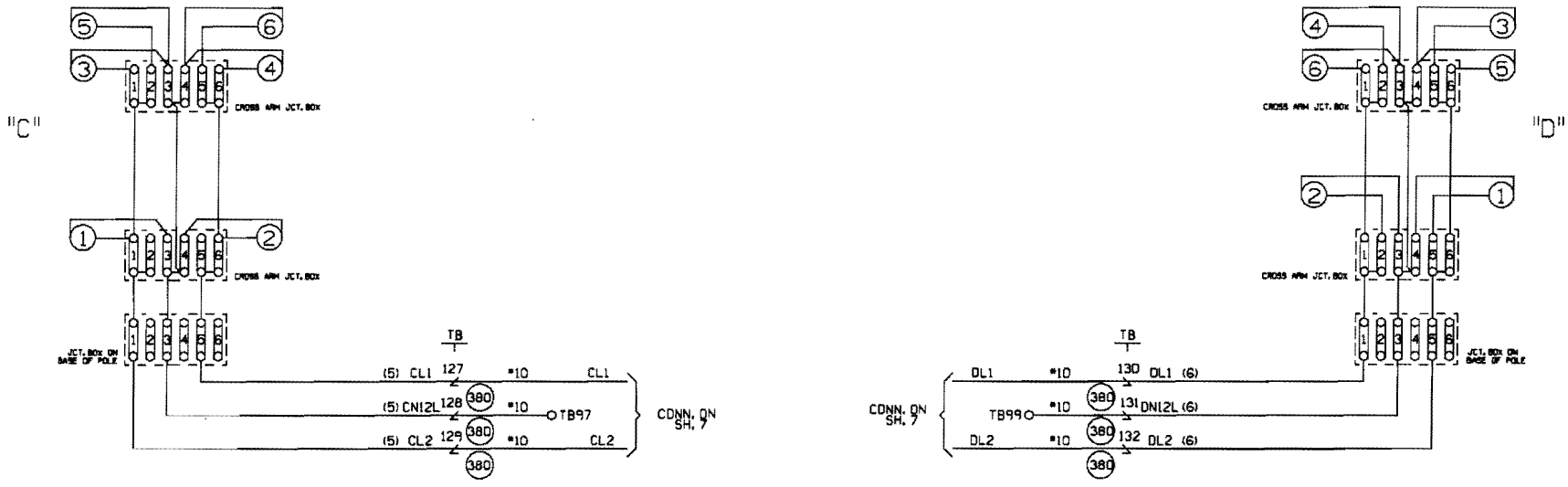

CABLE TABULATION

CABLE NO. 5 5C. NO. 6 U.G.B.T.
CABLE NO. 6 5C. NO. 6 U.G.B.T.

CHICAGO HEIGHTS, ILLINOIS
EAST END AVENUE
M.P. 0.13
CHICAGO HEIGHTS IND. LEAD
(C.H.T.T. UNIT #2)
D.O.T.#862 645N

NEW SHEET

6-30-08 RELOCATE CANTS AND INSTALL NEW GATES w/ISLAND CIRCUIT IN A NEW BUNGALOW AT EAST END AVE, MP 0.13. AFE 88154 GRK WITT/JJF	MODIFICATION LEVEL		UNION PACIFIC QUALITY PRODUCTIVITY SAFETY SIGNAL DESIGN	DES: WITT	**UNION PACIFIC RAILROAD**	DATE 6-30-08
	Q.A. LAST LEVEL CHECKED	DQ		DIG: WITT	CHICAGO HEIGHTS, ILLINOIS	SHEET 8
	LAST LEVEL MOD THIS TYPICAL	DQ		CHK: GRK	HIGHWAY CROSSING SIGNALS	DWG 0.13
	LAST LEVEL BY DESIGNER	DQ		A.F.E. 88154	CONTROL CIRCUITS	S-305
	CHANGED FROM TYPICAL?	Y		ID= 0305013.8X	Office of Sr AVP Engineering - Signal/TCO Omaha, Nebraska	

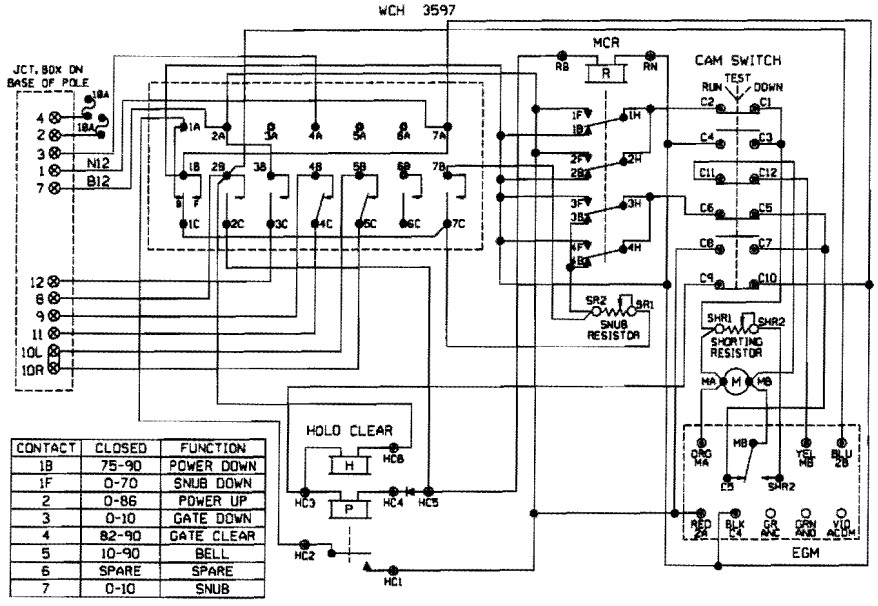

CONTACT	CLOSED	FUNCTION
1B	75-90	POWER DOWN
1F	0-70	SNUB DOWN
2	0-86	POWER UP
3	0-10	GATE DOWN
4	82-90	GATE CLEAR
5	10-90	BELL
6	SPARE	SPARE
7	0-10	SNUB

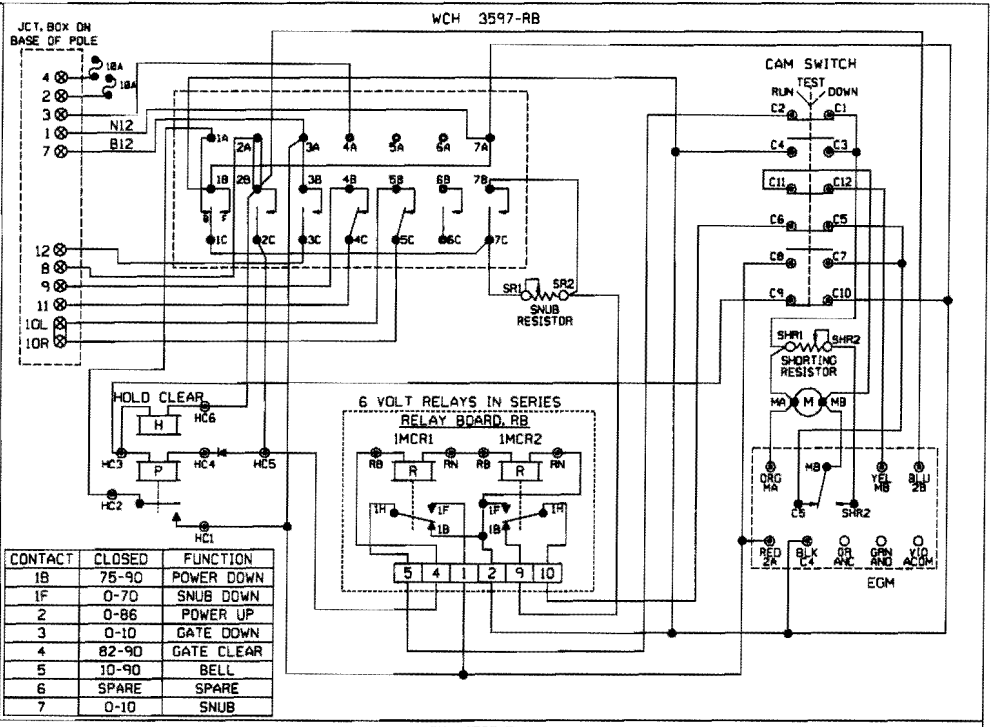

CONTACT	CLOSED	FUNCTION
1B	75-90	POWER DOWN
1F	0-70	SNUB DOWN
2	0-86	POWER UP
3	0-10	GATE DOWN
4	82-90	GATE CLEAR
5	10-90	BELL
6	SPARE	SPARE
7	0-10	SNUB

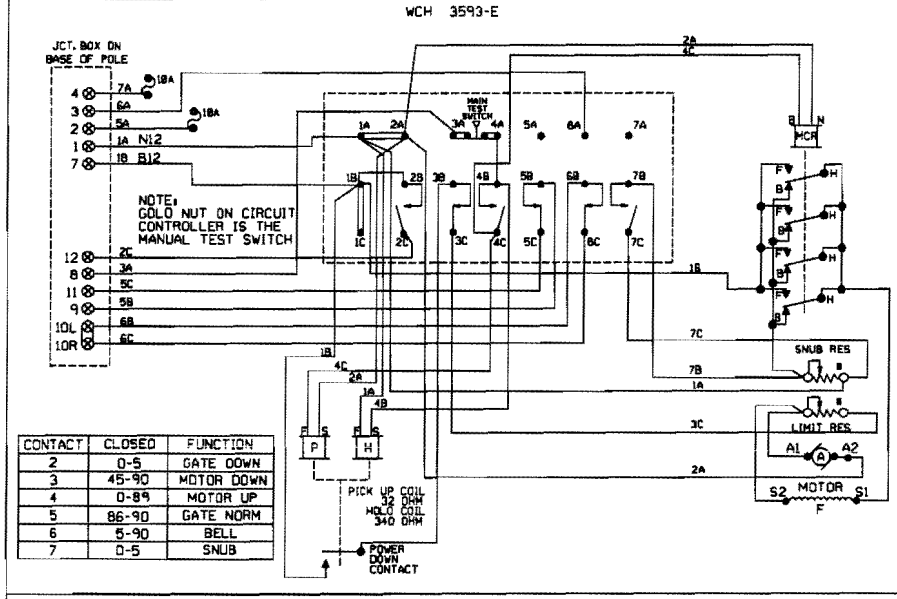

CONTACT	CLOSED	FUNCTION
2	0-5	GATE DOWN
3	45-90	MOTOR DOWN
4	0-89	MOTOR UP
5	86-90	GATE NORM
6	5-90	BELL
7	0-5	SNUB

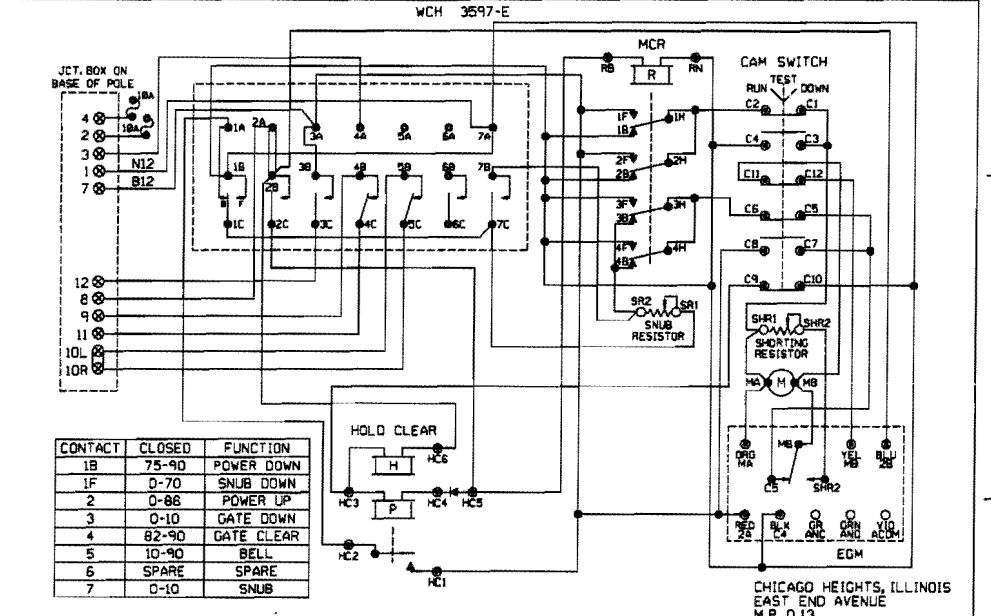

CONTACT	CLOSED	FUNCTION
1B	75-90	POWER DOWN
1F	0-70	SNUB DOWN
2	0-86	POWER UP
3	0-10	GATE DOWN
4	82-90	GATE CLEAR
5	10-90	BELL
6	SPARE	SPARE
7	0-10	SNUB

SHOW TYPE MECH. INSTALLED

ALL MECHANISMS SHOWN IN THE CLEAR POSITION

JCT. BOX ON BASE POLE

L	R	L	R
1	1	7	7
2	2	8	8
3	3	9	9
4	4	10	10
5	5	11	11
6	6	12	12

CHICAGO HEIGHTS, ILLINOIS
EAST END AVENUE
M.P. 0.13
CHICAGO HEIGHTS IND. LEAD
(C.H.T.T. UNIT #2)
D.O.T.#862 645N

NEW SHEET

6-30-08 RELOCATE CANTS AND INSTALL NEW GATES w/ISLAND CIRCUIT IN A NEW BUNGALOW AT EAST END AVE. MP 0.13. AFE 88154 GRK WITT/JJF	MODIFICATION LEVEL		UNION PACIFIC SAFETY SIGNAL DESIGN	DES: WITT DIG: WITT CHK: GRK A.F.E. 88154 ID= 0305013.9X	**UNION PACIFIC RAILROAD** CHICAGO HEIGHTS, ILLINOIS HIGHWAY CROSSING SIGNALS CONTROL CIRCUITS Office of Sr AVP Engineering - Signal/TCD Omaha, Nebraska	DATE 6-30-08 SHEET 9 DWG 0.13 S-305
	Q.A. LAST LEVEL CHECKED	DQ				
	LAST LEVEL MOD THIS TYPICAL	DQ				
	LAST LEVEL BY DESIGNER	DQ				
	CHANGED FROM TYPICAL?	N				

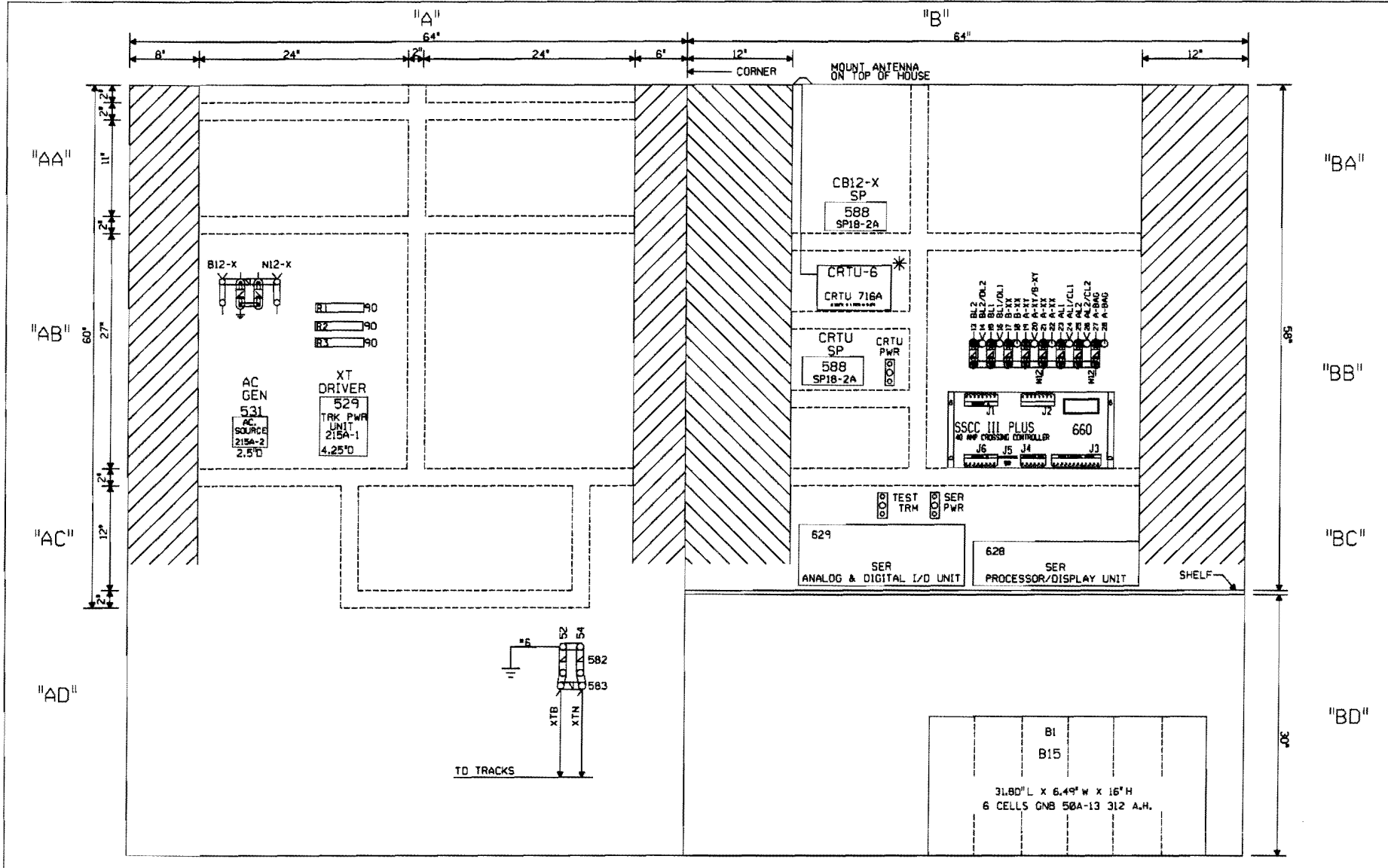

NOTE: ALL DIMENSIONS SHOWN ARE APPROXIMATE.

0 1 2 3 4 FEET

SCALE: 1.5 INCHES = 1 FOOT

✳ = TO BE INSTALLED IN THE FIELD.

CHICAGO HEIGHTS, ILLINOIS
EAST END AVENUE
M.P. D.13
CHICAGO HEIGHTS IND. LEAD
(C.H.T.T. UNIT #2)
D.O.T.#862 645N

NEW SHEET

6-30-08 RELOCATE CANTS AND INSTALL NEW GATES w/ISLAND CIRCUIT IN A NEW BUNGALOW AT EAST END AVE, MP D.13. AFE 88154 GRK WITT/JJF	
MODIFICATION LEVEL	
O. A. LAST LEVEL CHECKED	00
LAST LEVEL MOD THIS TYPICAL	00
LAST LEVEL BY DESIGNER	00
CHANGED FROM TYPICAL?	Y

UNION PACIFIC — QUALITY PRODUCTIVITY SAFETY — SIGNAL DESIGN

DES:	WITT
DIG:	WITT
CHK:	GRK
A.F.E.	88154
ID# 0305013.10X	

UNION PACIFIC RAILROAD

CHICAGO HEIGHTS, ILLINOIS
HIGHWAY CROSSING SIGNALS
CONTROL CIRCUITS

Office of Sr. AVP Engineering - Signal/TCO Omaha, Nebraska

DATE	6-30-08
SHEET	10
DWG	D.13
	S-305

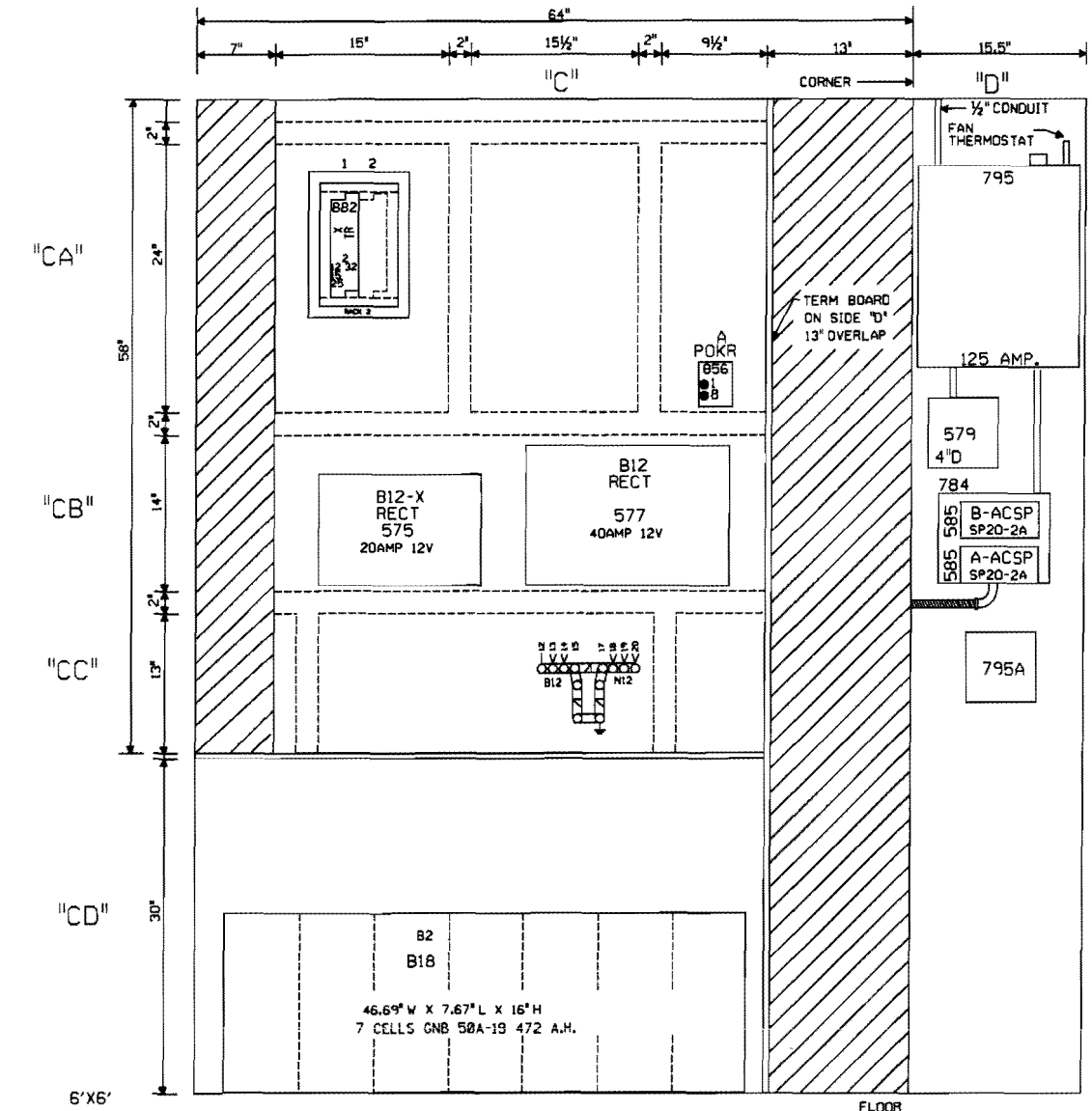

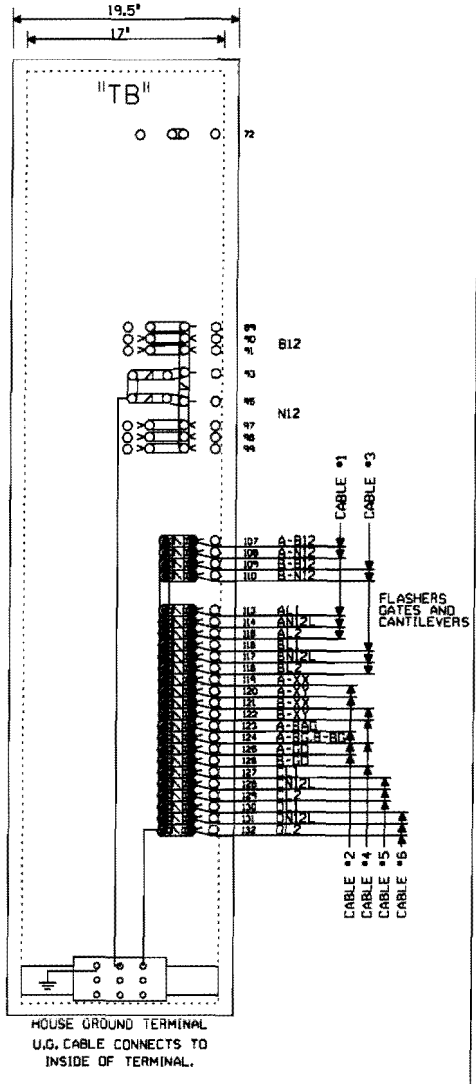

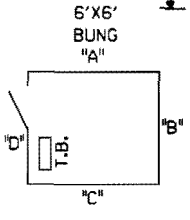

NOTE: ALL DIMENSIONS SHOWN ARE APPROXIMATE.

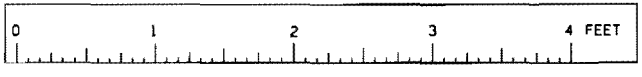

SCALE: 1.5 INCHES = 1 FOOT

NEW SHEET

CHICAGO HEIGHTS, ILLINOIS
EAST END AVENUE
M.P. 0.13
CHICAGO HEIGHTS IND. LEAD
(C.H.T.T. UNIT #2)
O.D.T.#862 645N

6-30-08 RELOCATE CANTS AND INSTALL NEW GATES w/ISLAND CIRCUIT IN A NEW BUNGALOW AT EAST END AVE. MP 0.13. AFE 88154 ORK WITT/JJF	MODIFICATION LEVEL		UNION PACIFIC SIGNAL DESIGN	DES: WITT	UNION PACIFIC RAILROAD	DATE 6-30-08
	O. A. LAST LEVEL CHECKED	DO		DIG: WITT	CHICAGO HEIGHTS, ILLINOIS HIGHWAY CROSSING SIGNALS CONTROL CIRCUITS	SHEET 11
	LAST LEVEL MOD THIS TYPICAL	DO		CHK: ORK		DWG 0.13
	LAST LEVEL BY DESIGNER	DO		A.F.E. 88154		S-305
	CHANGED FROM TYPICAL?	Y		ID: 0305013.11X	Office of Sr. AVP Engineering - Signal/TCO Omaha, Nebraska	