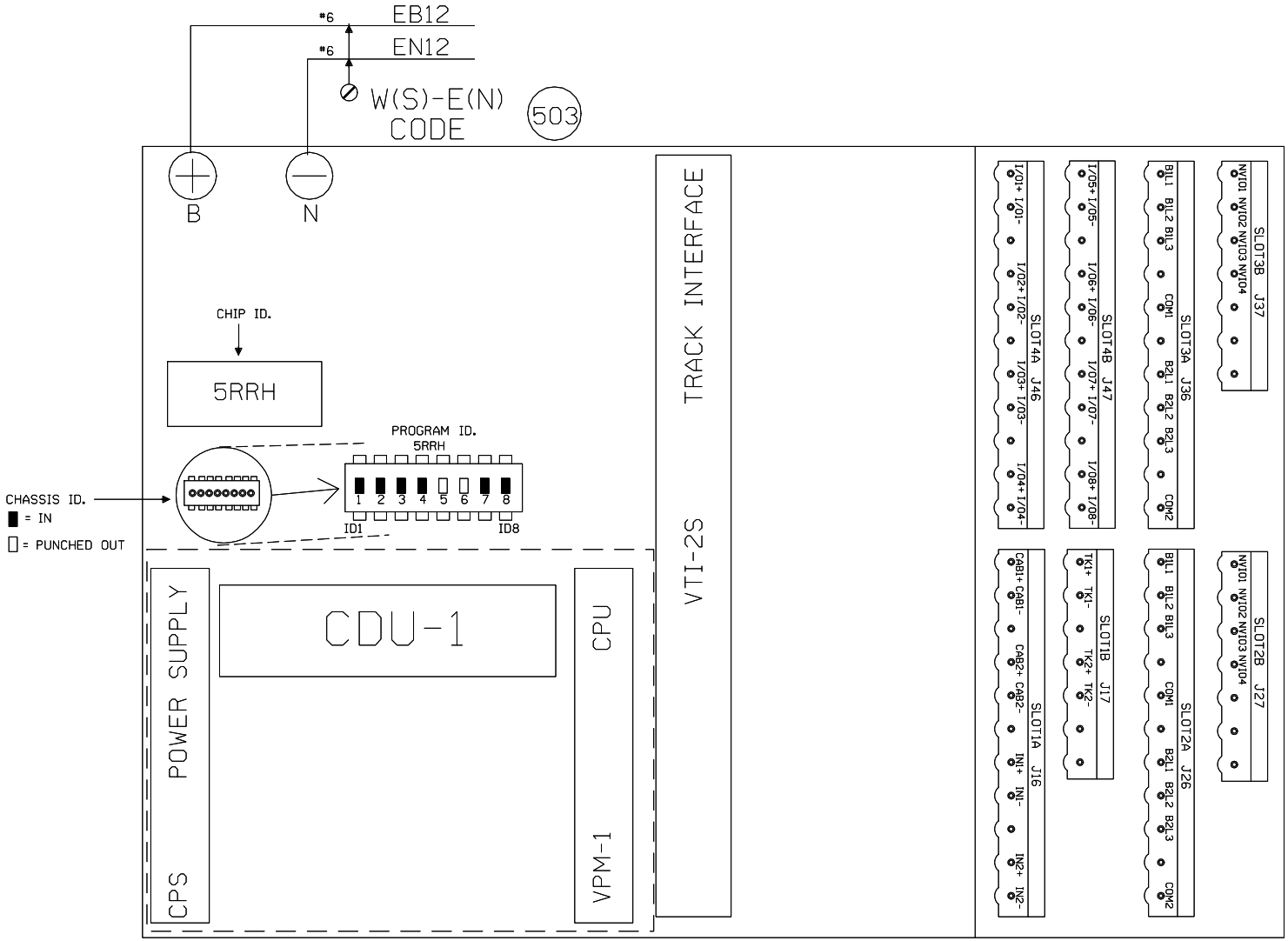

CODE 5
OPERATION SETTINGS

L ALT-5	FALSE
R ALT-5	FALSE

NEW SHEET
SPRINGFIELD SUBDIVISION
REGENERATIVE REPEATER
M.P. 244.23
6'X6' HOUSE

1	03-17-08 INSTALL FLS/GATES & CONSTANT WARNING AT T.R. 32 M.P. 244.23 A.F.E. 87183 CJB / /CTC/JJF	MODIFICATION LEVEL		UNION PACIFIC QUALITY PRODUCTIVITY SAFETY SIGNAL DESIGN	DES: CTC	UNION PACIFIC RAILROAD	DATE 03-17-08
		Q. A. LAST LEVEL CHECKED	DQ		DIG: CTC	BLOOMINGTON YARD, ILLINOIS TO VALLEY JCT., ILLINOIS C.T.C. CIRCUITS	SHEET 8
		LAST LEVEL MOD THIS TYPICAL	DQ		CHK: CJB		DWG 244.23
		LAST LEVEL BY DESIGNER	DQ		A.F.E. 87183		RTE CSL
		CHANGED FROM TYPICAL?	Y		ID= CSL24423.8S	Office of Sr AVP Engineering - Signal/TCO Omaha, Nebraska	
		REV 02/01/08 1TE5INTC.3					

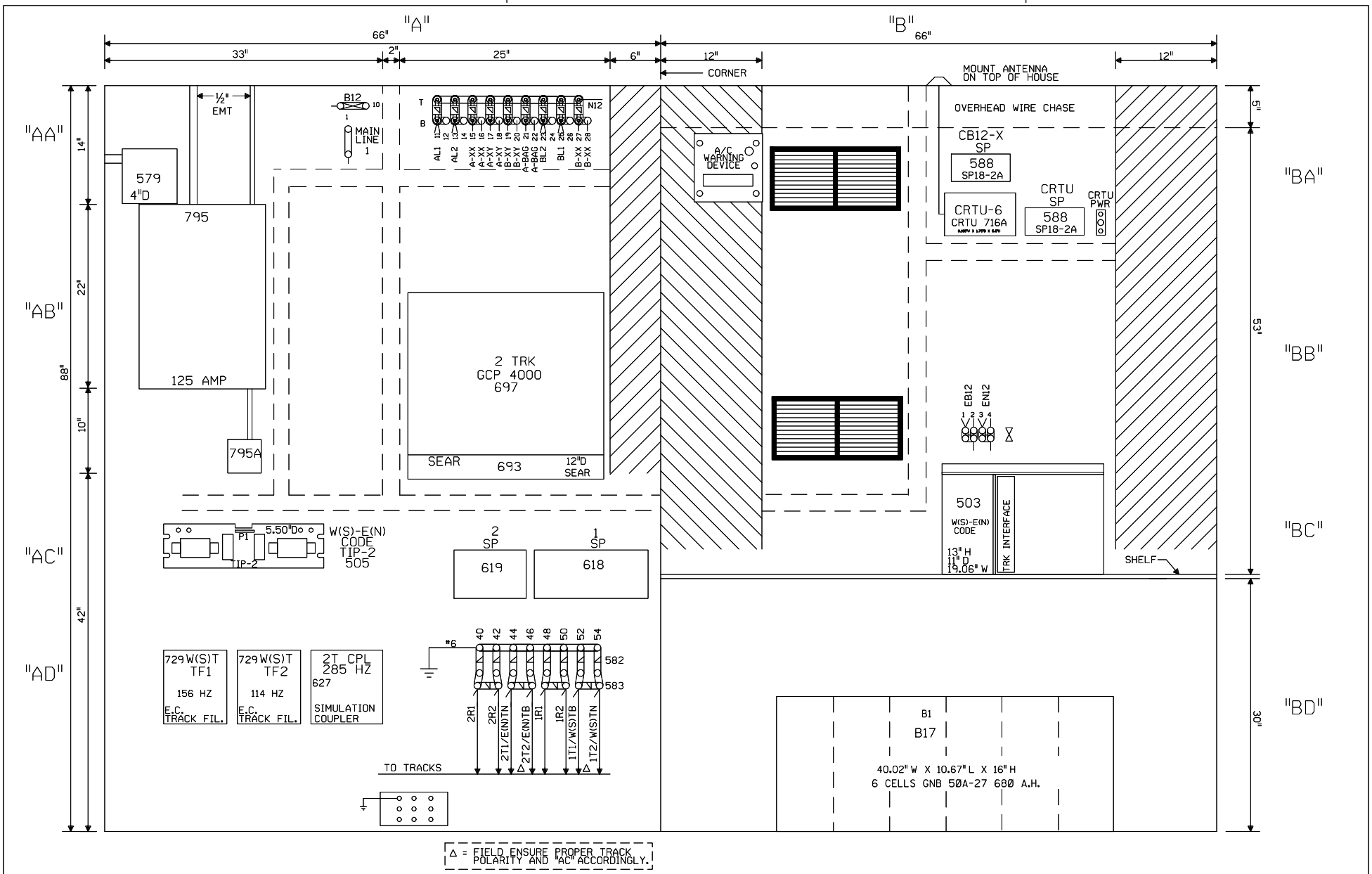

Δ = FIELD ENSURE PROPER TRACK POLARITY AND "AC" ACCORDINGLY.

NOTE: ALL DIMENSIONS SHOWN ARE APPROXIMATE.

0 1 2 3 4 FEET

SCALE: 1.5 INCHES = 1 FOOT

NEW SHEET
BRIGHTON, ILLINOIS
T.R. 32
M.P. 244.23
SPRINGFIELD SUBDIVISION
D.O.T.#294 416B

1	03-17-08
INSTALL FLS/GATES & CONSTANT WARNING AT T.R. 32 M.P. 244.23 A.F.E. 87183	CJB
/	/CTC/JJF

MODIFICATION LEVEL	
O. A. LAST LEVEL CHECKED	DQ
LAST LEVEL MOD THIS TYPICAL	DQ
LAST LEVEL BY DESIGNER	DQ
CHANGED FROM TYPICAL?	Y

mv 02.01.08 4K 4TKGFC.8

UNION PACIFIC
QUALITY PRODUCTIVITY SAFETY
SIGNAL DESIGN

DES: CTC
DIG: CTC
CHK: CJB
A.F.E. 87183
ID= CSL24423.9X

UNION PACIFIC RAILROAD
BLOOMINGTON YARD, ILLINOIS TO VALLEY JCT., ILLINOIS
C.T.C. CIRCUITS
Office of Sr AVP Engineering - Signal/TCO Omaha, Nebraska

DATE 03-17-08
SHEET 9
DWG 244.23
RTE CSL

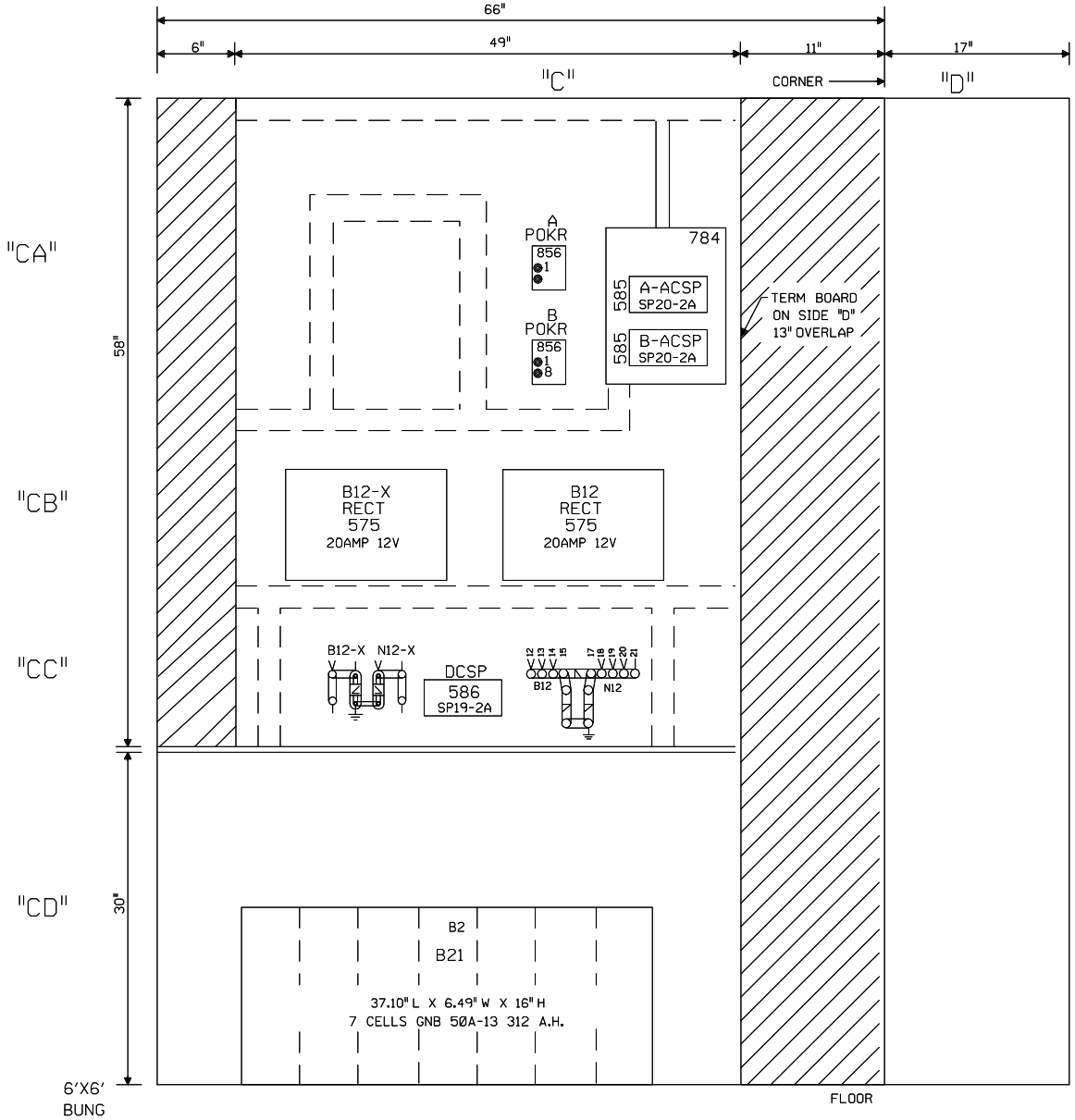

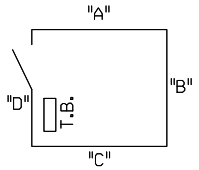

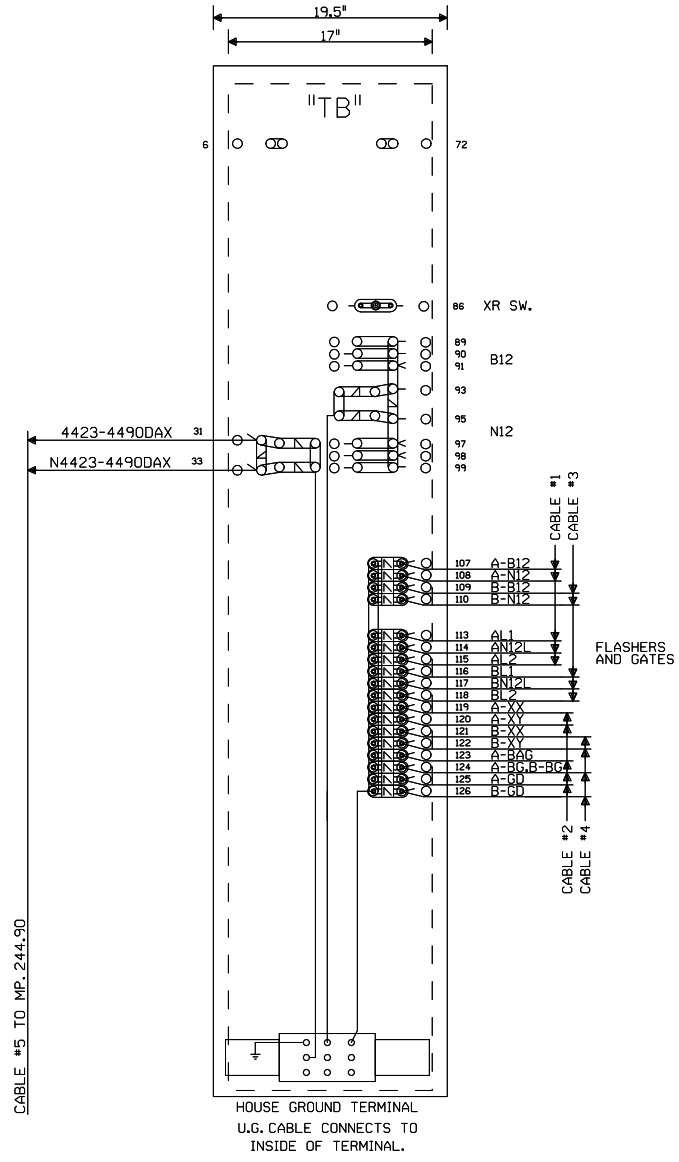

NOTE: ALL DIMENSIONS SHOWN
ARE APPROXIMATE.

0 1 2 3 4 FEET

SCALE: 1.5 INCHES = 1 FOOT

NEW SHEET
BRIGHTON, ILLINOIS
T.R. 32
M.P. 244.23
SPRINGFIELD SUBDIVISION
D.O.T.#294 416B

1	03-17-08
INSTALL FLS/GATES & CONSTANT WARNING AT T.R. 32 M.P. 244.23 A.F.E. 87183	CJB
/	/CTC/JJF

MODIFICATION LEVEL	
Q. A. LAST LEVEL CHECKED	DQ
LAST LEVEL MOD THIS TYPICAL	DQ
LAST LEVEL BY DESIGNER	DQ
CHANGED FROM TYPICAL?	Y

mv 02.01.08 4K GFC.9

UNION PACIFIC
QUALITY PRODUCTIVITY SAFETY
SIGNAL DESIGN

DES:	CTC
DIG:	CTC
CHK:	CJB
A.F.E.	87183
ID= CSL24423.10X	

UNION PACIFIC RAILROAD
BLOOMINGTON YARD, ILLINOIS TO
VALLEY JCT., ILLINOIS
C.T.C. CIRCUITS
Office of Sr AVP Engineering - Signal/TCO Omaha, Nebraska

DATE	03-17-08
SHEET	10
DWG	244.23
RTE	CSL

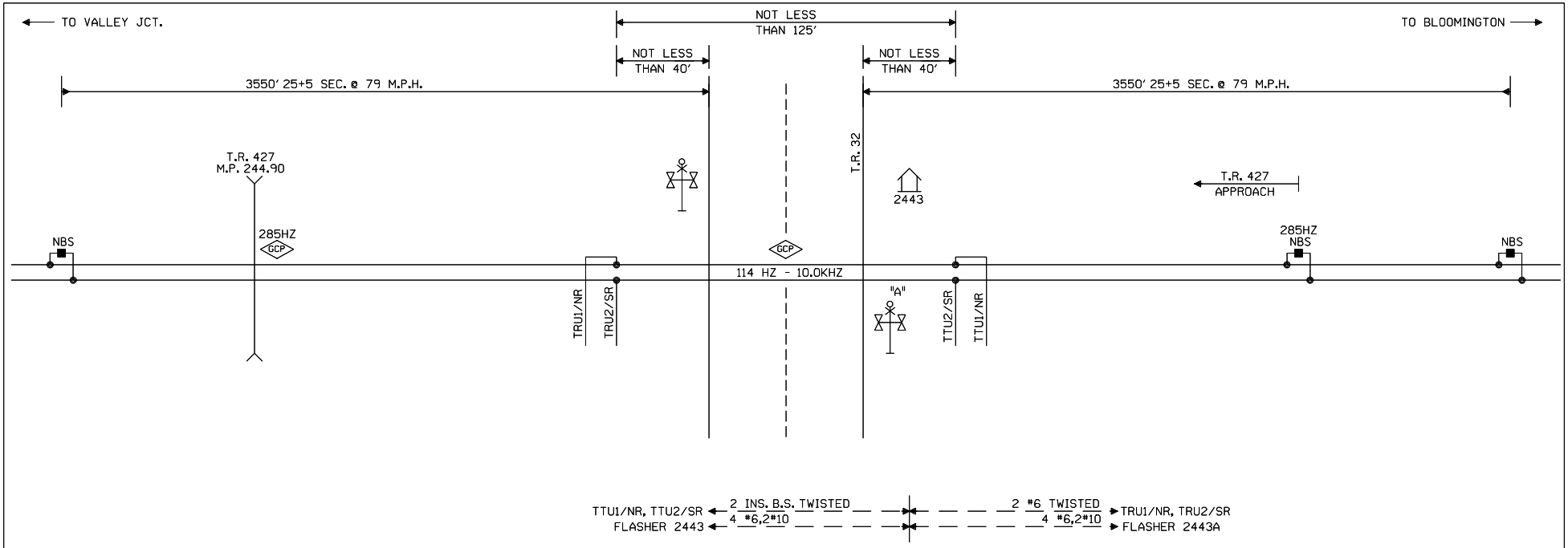

CONNECTS TO DRAWING CSL 244.90

CONNECTS TO DRAWING CSL 243.55

"TO BE VOIDED"

BRIGHTON, ILLINOIS
TR 32
M.P. 244.33
SPRINGFIELD SUBDIVISION
D.O.T.#294 416B

				2 03-17-08 M.P. 244.23 A.F.E. 87183 / /CTC/JJF	REV. 3-20-08 PER IN-SERVICE 50 MILE E.C. PROJECT M.P. 191.07 TO 252.00 REC. #14126 MJD/WITT/WJB	MODIFICATION LEVEL Q.A. LAST LEVEL CHK'D. LAST LEVEL MOD. THIS TYP. LAST LEVEL BY DESIGNER. CHANGED FROM TYP.? Y/N	UNION PACIFIC QUALITY PRODUCTIVITY SAFETY SIGNAL DESIGN	DES: DIG: WITT CHK: A.F.E. ID= CSL24433.1X	UNION PACIFIC RAILROAD BLOOMINGTON, ILLINOIS TO VALLEY JCT., ILLINOIS C.T.C. CIRCUITS OFFICE OF CHIEF ENG'R OMAHA NEBR.	DATE 3-20-08 SHEET 1 DWG 244.33 RTE-CSL

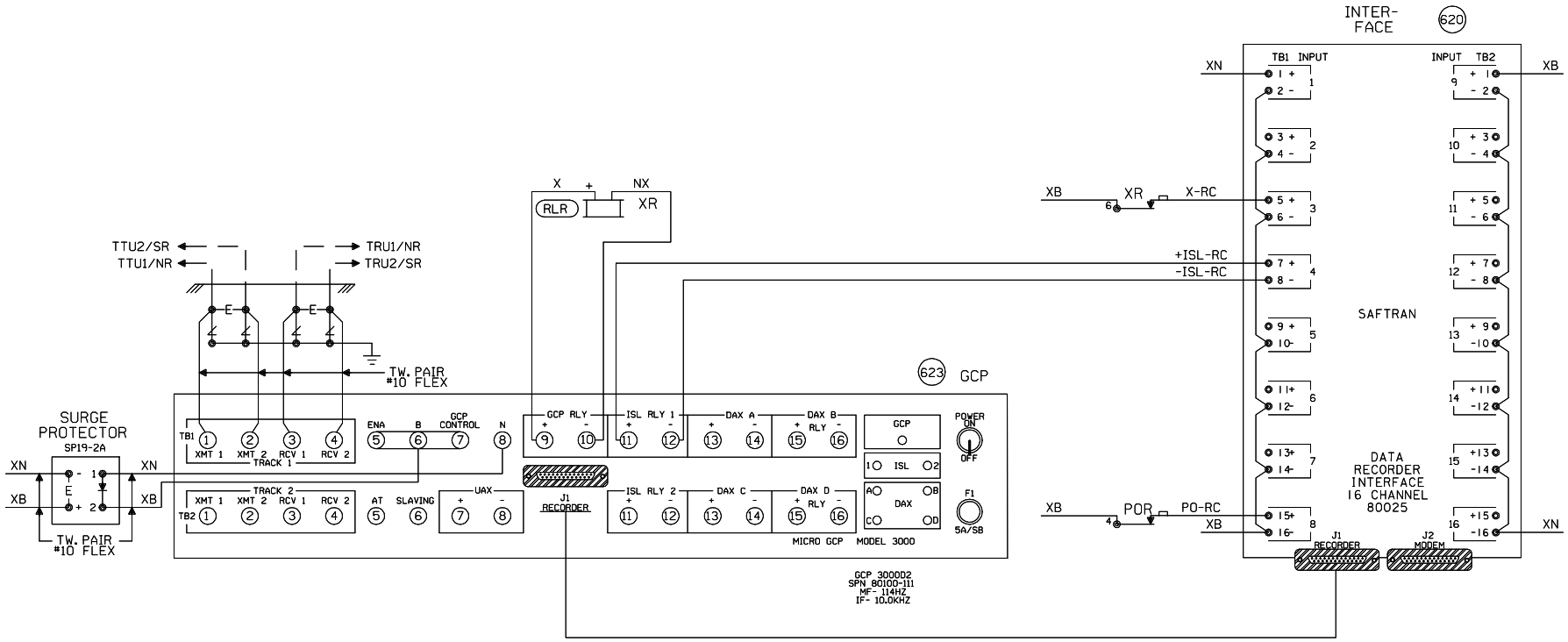

GCP 3000D2 UNIT

PROGRAMMING SYSTEM APPLICATION PARAMETERS		
	PROGRAM	ENTER
1	NUMBER OF TRACKS	1
2	FREQUENCY	114 HZ
3	UNIDIRECTIONAL/BIDIRECTIONAL	BI
4	TRANSMIT LEVEL	HIGH
5	PREDICTOR/MOTION SENSOR	PREDICTOR
6	WARNING TIME	25 SEC.
7	APPROACH (DISTANCE)	3550
8	UAX PICKUP DELAY	0
9	NUMBER OF DAXS	0
10	SLAVING - MASTER OR SLAVE	MASTER
11	PASSWORD ENABLED/DISABLED	ENA
12	RECORDER INSTALLED/NOT INSTALLED	INSTALLED

"TO BE VOIDED"

NOTES:

E = LOW VOLTAGE ARRESTER
∠ = HIGH VOLTAGE ARRESTER
ALL WIRES TO BE #14 FLEX UNLESS OTHERWISE NOTED.
TRANSMIT WIRES MUST BE RUN TO "CASE" SIDE OF CROSSING.

BRIGHTON, ILLINOIS
TR 32
M.P. 244.33
SPRINGFIELD SUBDIVISION
D.O.T.#294 416B

2	03-17-08	REV. 3-20-08 PER IN-SERVICE 50 MILE E.C. PROJECT M.P. 191.07 TO 252.00 REC. #14126	MODIFICATION LEVEL
M.P. 244.23 A.F.E. 87183	/ /CTC/JJF	MJD/WITT/WJB	Q.A. LAST LEVEL CHK'D.
			LAST LEVEL MOD. THIS TYP.
			LAST LEVEL BY DESIGNER.
			CHANGED FROM TYP.? Y/N

UNION PACIFIC
QUALITY PRODUCTIVITY SAFETY
SIGNAL DESIGN

DES:
DIG: WITT
CHK:
A.F.E.
ID= CSL24433.2X

UNION PACIFIC RAILROAD
BLOOMINGTON, ILLINOIS
TO VALLEY JCT., ILLINOIS
C.T.C. CIRCUITS
OFFICE OF CHIEF ENG'R OMAHA NEBR.

DATE 3-20-08
SHEET 2
DWG 244.33
RTE-CSL

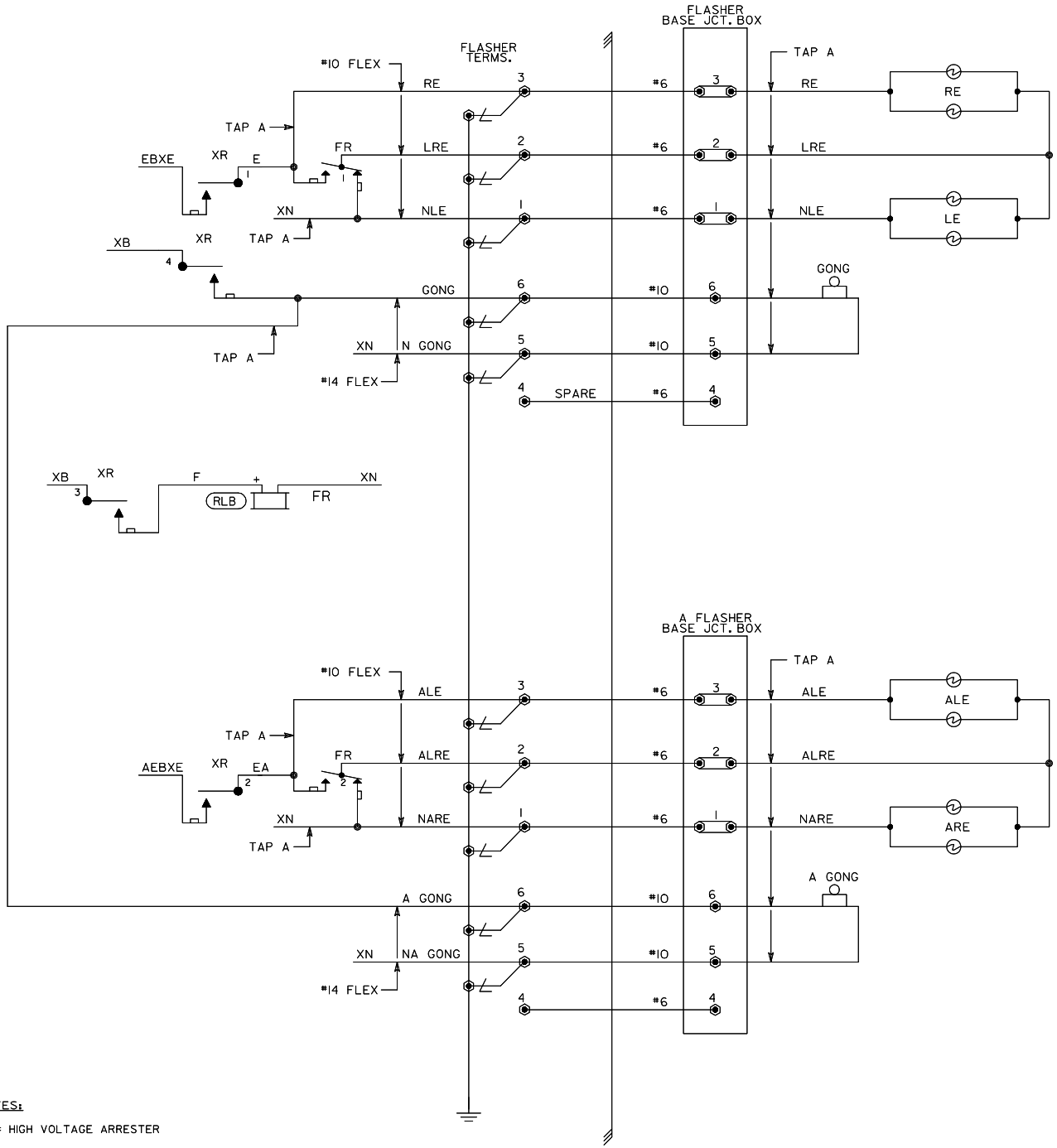

"TO BE VOIDED"

NOTES:

∠ = HIGH VOLTAGE ARRESTER

AUBURN, ILLINOIS
TR 32
M.P. 244.33
SPRINGFIELD SUBDIVISION
D.O.T.#294 416B

2	03-17-08	REV. 3-20-08	
		PER IN-SERVICE	
		50 MILE E.C. PROJECT	
		M.P. 191.07 TO 252.00	
		REC. #14126	
M.P. 244.23			
A.F.E. 87183			
/	/CTC/JJF	MJD/WITT/WJB	

MODIFICATION LEVEL	
Q.A. LAST LEVEL CHK'D.	
LAST LEVEL MOD. THIS TYP.	
LAST LEVEL BY DESIGNER.	
CHANGED FROM TYP.? Y/N	

UNION PACIFIC
QUALITY PRODUCTIVITY SAFETY
SIGNAL DESIGN

DES:	
DIG: WITT	
CHK:	
A.F.E.	
ID= CSL24433.3X	

UNION PACIFIC RAILROAD
BLOOMINGTON, ILLINOIS
TO VALLEY JCT., ILLINOIS
C.T.C. CIRCUITS

OFFICE OF CHIEF ENG'R OMAHA NEBR.

DATE	3-20-08
SHEET	3
DWG	244.33
	RTE-CSL

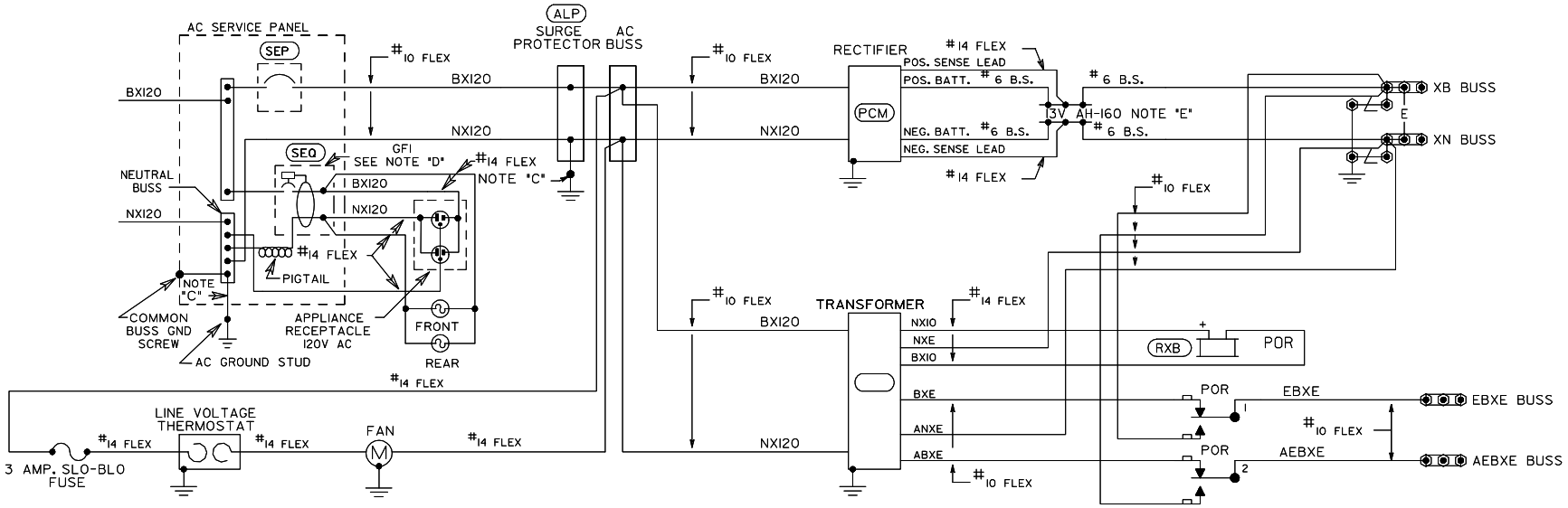

NOTES:

A - TWIST ALL TRACK LEAD PAIRS, ALL A.C. TO TRANSFORMER AND RECTIFIER PAIRS, RECTIFIER TO BATTERY PAIRS. BATTERY TO BUSS PAIRS AND BATTERY TO ELECTRONIC EQUIPMENT PAIRS.

B - WIRES FROM RECTIFIER TO BATTERY TO BE AS SHORT AS POSSIBLE

C - NXI20 BUSS AND AC ARRESTER TO BE GROUNDED TO AC GROUND STUD. CASE TO BE GROUNDED TO EARTH GROUND ROD. GROUNDING WIRES TO BE #6 SOLID AND SHORT AS POSSIBLE, AVOIDING ALL SHARP BENDS. ALL GROUND CONNECTIONS TO CASE MUST USE A STAINLESS STEEL STAR WASHER BETWEEN WIRE AND CASE.

D - NO SIGNAL CONTROL DEVICES ARE TO BE SERVED FROM GFI CIRCUIT BREAKER. ONLY NON-VITAL APPLIANCES SUCH AS TROUBLE LIGHT, PORTABLE DRILL OR TEST EQUIPMENT ARE TO BE SERVED FROM THIS CIRCUIT BREAKER.

E - BATTERIES = 9 CELLS NICAD OR 6 CELLS LEAD ACID.

∠ - HIGH VOLTAGE ARRESTER

E - LOW VOLTAGE ARRESTER

"TO BE VOIDED"

BRIGHTON, ILLINOIS
TR 32
M.P. 244.33
SPRINGFIELD SUBDIVISION
D.O.T.#294 416B

2	03-17-08	REV. 3-20-08 PER IN-SERVICE 50 MILE E.C. PROJECT M.P. 191.07 TO 252.00 REC. #14126	
M.P. 244.23 A.F.E. 87183	/ /CTC/JJF	MJD/WITT/WJB	

MODIFICATION LEVEL	
Q.A. LAST LEVEL CHK'D.	
LAST LEVEL MOD. THIS TYP.	
LAST LEVEL BY DESIGNER.	
CHANGED FROM TYP.? Y/N	

UNION PACIFIC
QUALITY PRODUCTIVITY SAFETY
SIGNAL DESIGN

DES:	
DIG: WITT	
CHK:	
A.F.E.	
ID= CSL24433.4X	

UNION PACIFIC RAILROAD
BLOOMINGTON, ILLINOIS
TO VALLEY JCT., ILLINOIS
C.T.C. CIRCUITS

OFFICE OF CHIEF ENG'R OMAHA NEBR.

DATE	3-20-08
SHEET	4
DWG	244.33
	RTE-CSL

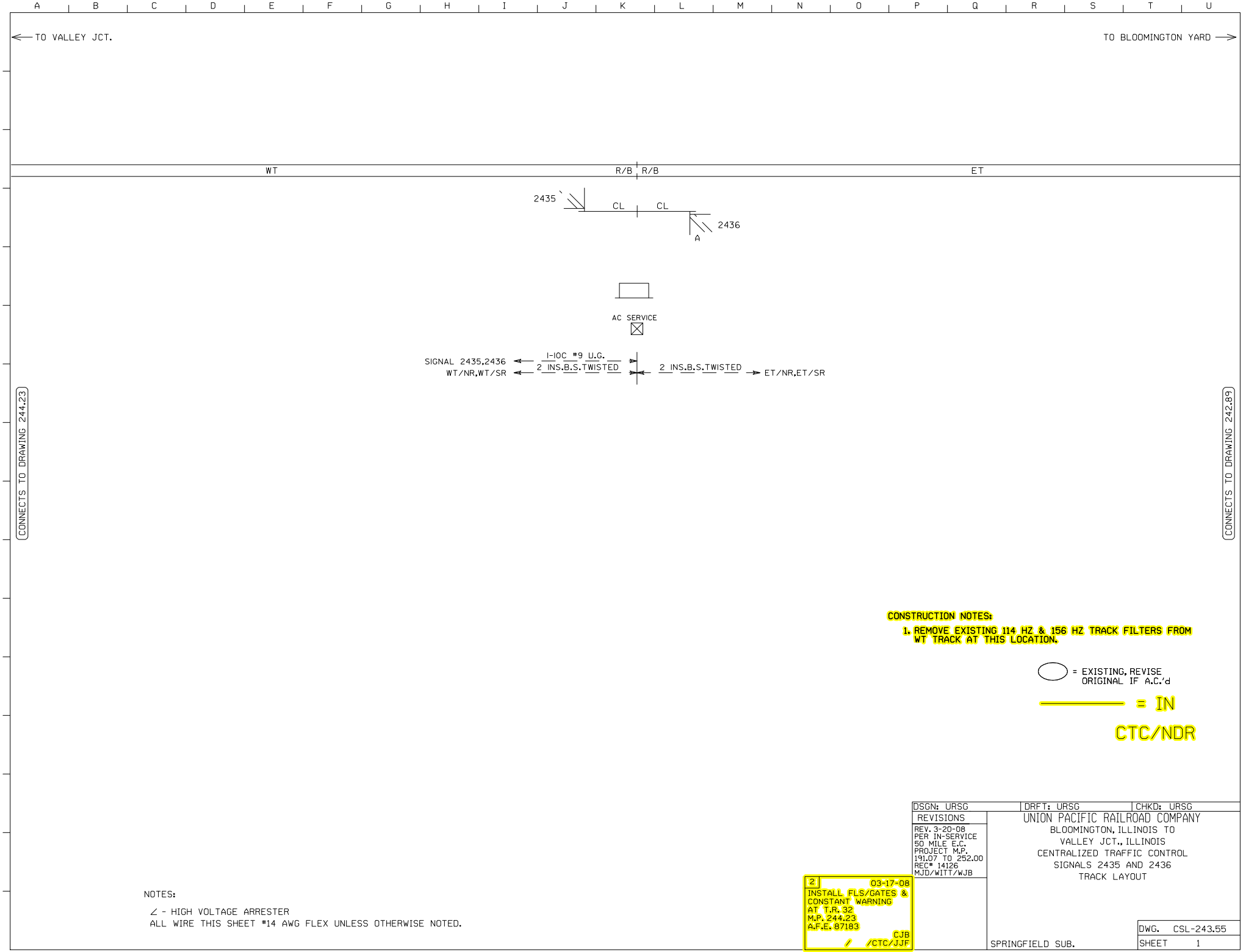
TO VALLEY JCT.
TO BLOOMINGTON YARD
WT
R/B R/B
ET
2435
CL
CL
2436
A
AC SERVICE
SIGNAL 2435,2436
WT/NR,WT/SR
1-10C #9 U.G.
2 INS.B.S.TWISTED
2 INS.B.S.TWISTED
ET/NR,ET/SR
CONNECTS TO DRAWING 244.23
CONNECTS TO DRAWING 242.89
CONSTRUCTION NOTES:
1. REMOVE EXISTING 114 HZ & 156 HZ TRACK FILTERS FROM WT TRACK AT THIS LOCATION.
= EXISTING, REVISE ORIGINAL IF A.C.'d
= IN CTC/NDR
NOTES:
∠ - HIGH VOLTAGE ARRESTER
ALL WIRE THIS SHEET #14 AWG FLEX UNLESS OTHERWISE NOTED.
2 03-17-08
INSTALL FLS/GATES & CONSTANT WARNING AT T.R. 32 M.P. 244.23 A.F.E. 87183
CJB
/ /CTC/JJF
DSGN: URSG
DRFT: URSG
CHKD: URSG
REVISIONS
REV. 3-20-08 PER IN-SERVICE 50 MILE E.C. PROJECT M.P. 191.07 TO 252.00 REC# 14126 MJD/WITT/WJB
UNION PACIFIC RAILROAD COMPANY
BLOOMINGTON, ILLINOIS TO VALLEY JCT., ILLINOIS
CENTRALIZED TRAFFIC CONTROL
SIGNALS 2435 AND 2436
TRACK LAYOUT
SPRINGFIELD SUB.
DWG. CSL-243.55
SHEET 1
CADDS
ID.=CSL24355.1S

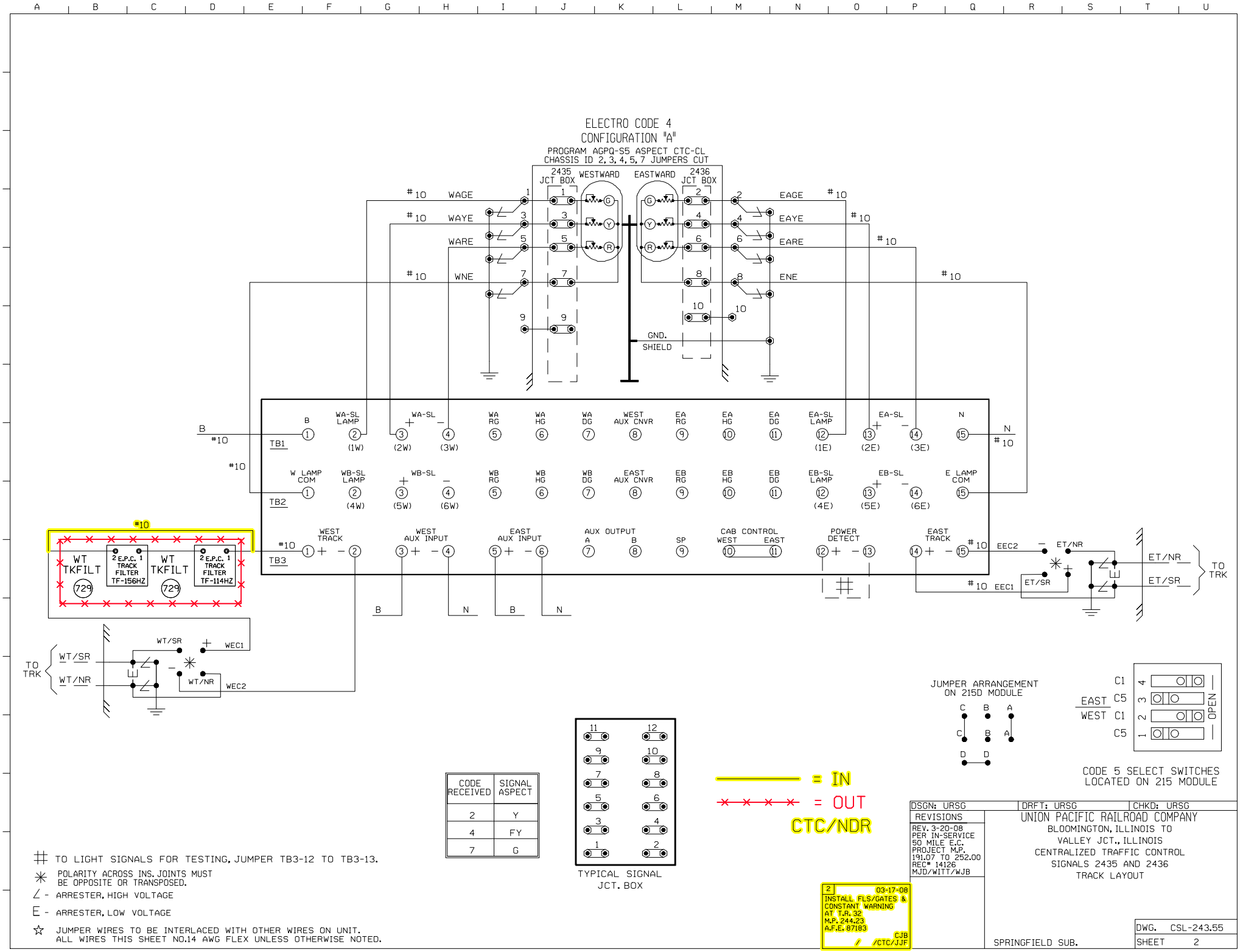

CODE RECEIVED	SIGNAL ASPECT
2	Y
4	FY
7	G

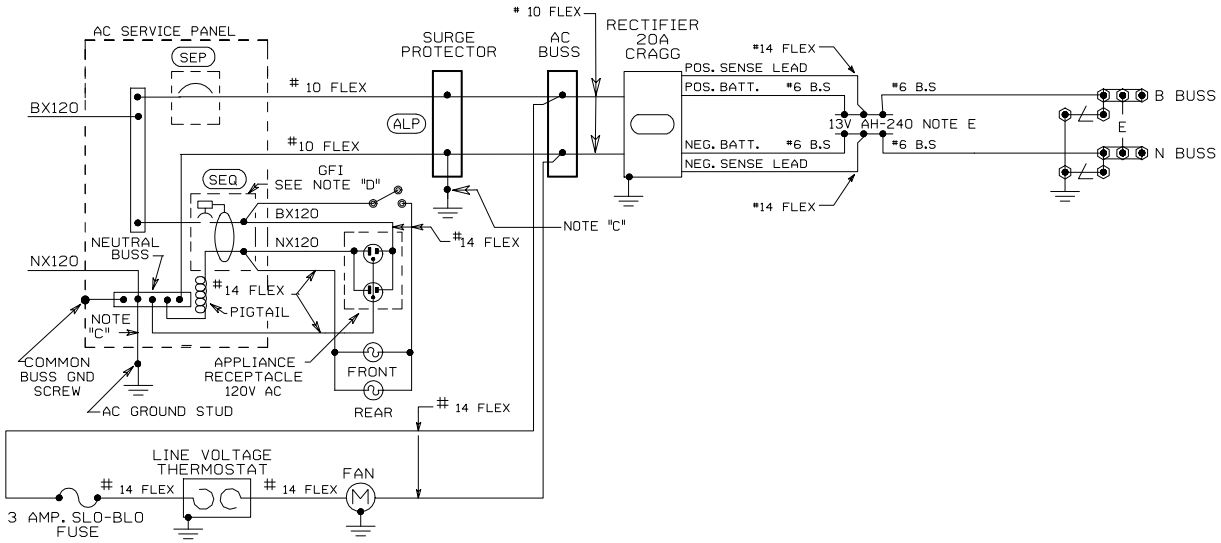

NOTES:

A - TWIST ALL TRACK LEAD PAIRS, ALL A.C. TO RECTIFIER PAIRS, RECTIFIER TO BATTERY PAIRS. BATTERY TO BUSS PAIRS AND BATTERY TO ELECTRONIC EQUIPMENT PAIRS.

B - WIRES FROM RECTIFIER TO BATTERY TO BE AS SHORT AS POSSIBLE

C - NX120 BUSS AND AC ARRESTER TO BE GROUNDED TO AC GROUND STUD. CASE TO BE GROUNDED TO EARTH GROUND ROD. GROUNDING WIRES TO BE #6 SOLID AND SHORT AS POSSIBLE, AVOIDING ALL SHARP BENDS. ALL GROUND CONNECTIONS TO CASE MUST USE A STAINLESS STEEL STAR WASHER BETWEEN WIRE AND CASE.

D - NO SIGNAL CONTROL DEVICES ARE TO BE SERVED FROM GFI CIRCUIT BREAKER. ONLY NON-VITAL APPLIANCES SUCH AS TROUBLE LIGHT, PORTABLE DRILL OR TEST EQUIPMENT ARE TO BE SERVED FROM THIS CIRCUIT BREAKER.

E - BATTERIES = 9 CELLS NICAD OR 6 CELLS LEAD ACID.

DSGN: URSG	DRFT: URSG	CHKD: URSG

REVISIONS

REV. 3-20-08
PER IN-SERVICE
50 MILE E.C.
PROJECT M.P.
191.07 TO 252.00
REC# 14126
MJD/WITT/WJB

2 03-17-08
M.P. 244.23
A.F.E. 87183
/ /CTC/JJF

UNION PACIFIC RAILROAD COMPANY
BLOOMINGTON, ILLINOIS TO
VALLEY JCT., ILLINOIS
CENTRALIZED TRAFFIC CONTROL
SIGNALS 2435 AND 2436
TRACK LAYOUT

SPRINGFIELD SUB.

DWG. CSL-243.55
SHEET 3

CADDS

ID.=CSL24355.3S