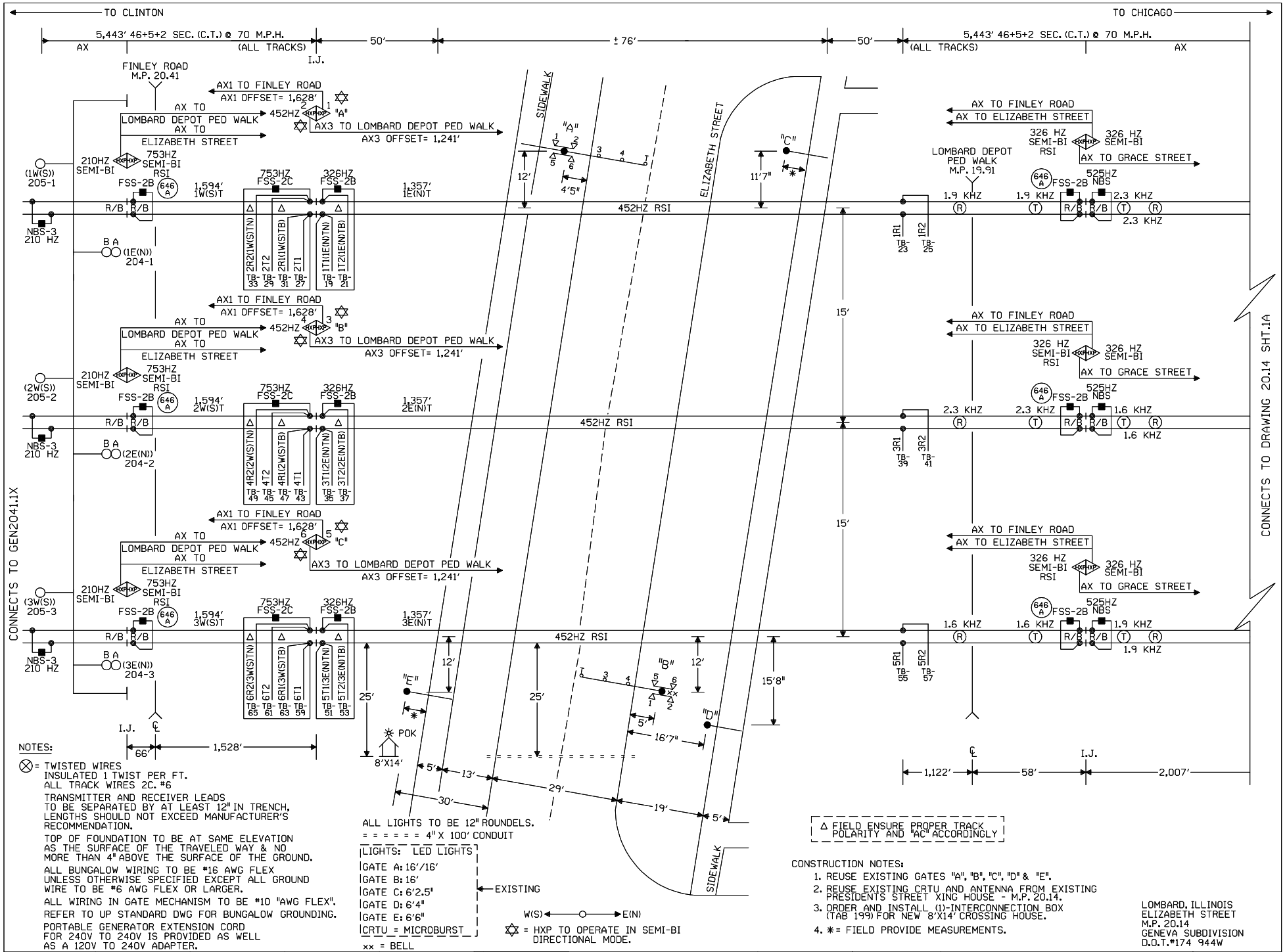

NOTES:

⊗ = TWISTED WIRES
INSULATED 1 TWIST PER FT.
ALL TRACK WIRES 2C. #6

TRANSMITTER AND RECEIVER LEADS TO BE SEPARATED BY AT LEAST 12" IN TRENCH. LENGTHS SHOULD NOT EXCEED MANUFACTURER'S RECOMMENDATION.

TOP OF FOUNDATION TO BE AT SAME ELEVATION AS THE SURFACE OF THE TRAVELED WAY & NO MORE THAN 4" ABOVE THE SURFACE OF THE GROUND.

ALL BUNGALOW WIRING TO BE #16 AWG FLEX UNLESS OTHERWISE SPECIFIED EXCEPT ALL GROUND WIRE TO BE #6 AWG FLEX OR LARGER.

ALL WIRING IN GATE MECHANISM TO BE #10 "AWG FLEX".

REFER TO UP STANDARD DWG FOR BUNGALOW GROUNDING.

PORTABLE GENERATOR EXTENSION CORD FOR 240V TO 240V IS PROVIDED AS WELL AS A 120V TO 240V ADAPTER.

ALL LIGHTS TO BE 12" ROUNDELS.
= = = = = = 4" X 100' CONDUIT

LIGHTS: LED LIGHTS
GATE A: 16'/16'
GATE B: 16'
GATE C: 6'2.5"
GATE D: 6'4"
GATE E: 6'6"
CRTU = MICROBURST

← EXISTING

xx = BELL

W(S) ←—○—→ E(N)

✡ = HXP TO OPERATE IN SEMI-BI DIRECTIONAL MODE.

△ FIELD ENSURE PROPER TRACK POLARITY AND "AC" ACCORDINGLY

CONSTRUCTION NOTES:

1. REUSE EXISTING GATES "A", "B", "C", "D" & "E".
2. REUSE EXISTING CRTU AND ANTENNA FROM EXISTING PRESIDENTS STREET XING HOUSE - M.P. 20.14.
3. ORDER AND INSTALL (1)-INTERCONNECTION BOX (TAB 199) FOR NEW 8'X14' CROSSING HOUSE.
4. ✱ = FIELD PROVIDE MEASUREMENTS.

LOMBARD, ILLINOIS
ELIZABETH STREET
M.P. 20.14
GENEVA SUBDIVISION
D.O.T.#174 944W

1	06-16-08	INSTALL HALF BLOCK SYSTEM FROM COLLEGE AVE. TO LOMBARD, ILL. PHASE 2 PART 2. (MP. 23.76 TO MP. 20.41) AFE #89952	JJL / /CTC/MDF

MODIFICATION LEVEL	
Q. A. LAST LEVEL CHECKED	DQ
LAST LEVEL MOD THIS TYPICAL	DQ
LAST LEVEL BY DESIGNER	DQ
CHANGED FROM TYPICAL?	Y

MEY 02.01.08 4K 2TKUGTYP.1

UNION PACIFIC
QUALITY PRODUCTIVITY SAFETY
SIGNAL DESIGN

DES:	CTC
DIG:	CTC
CHK:	JJL
A.F.E.	89952
ID= GEN2014.1X	

UNION PACIFIC RAILROAD

CHICAGO, ILLINOIS TO
CLINTON, IOWA
C.T.C. CIRCUITS

Office of Sr AVP Engineering - Signal/TCO Omaha, Nebraska

DATE	06-16-08
SHEET	1
DWG	20.14
	GEN

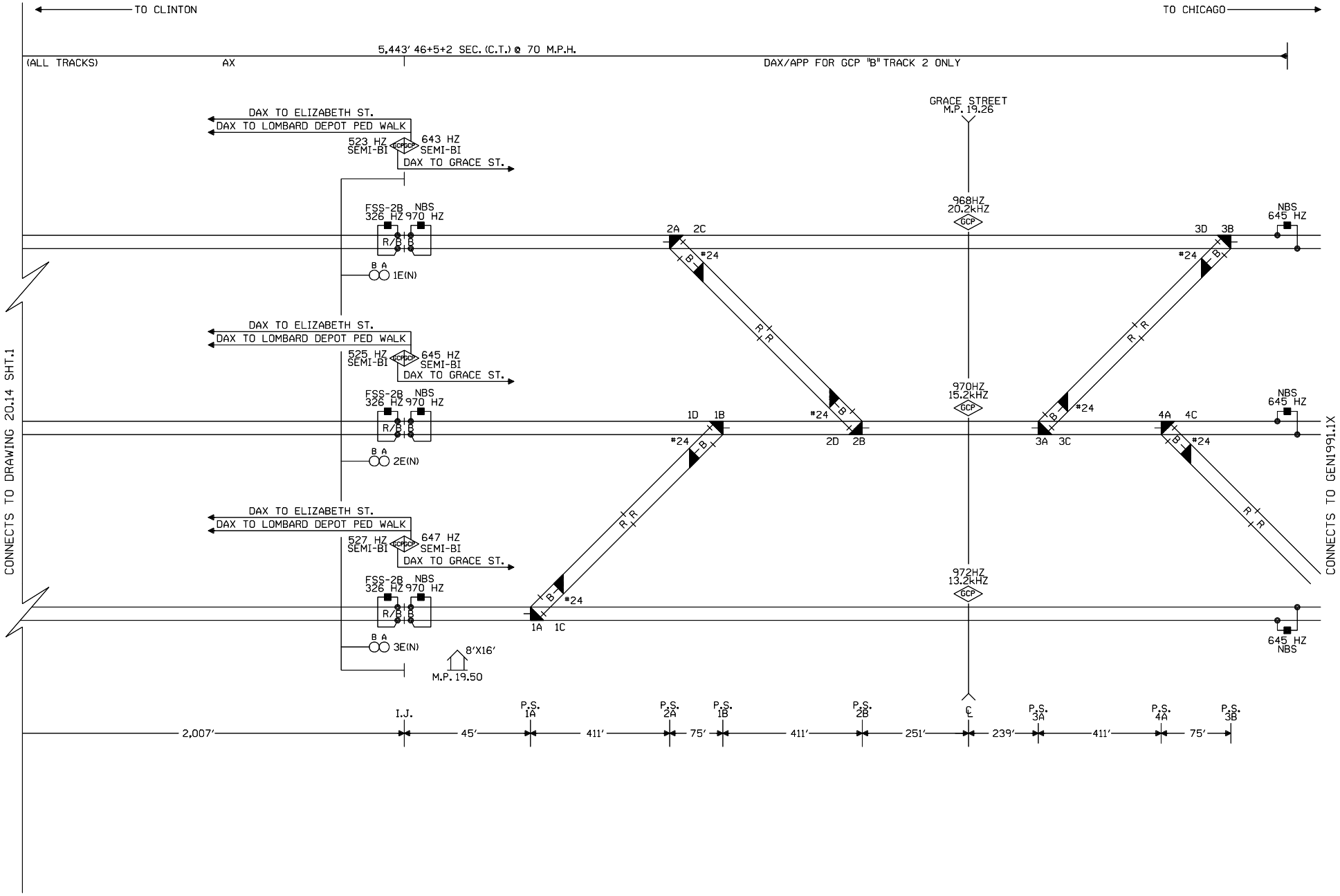

LOMBARD, ILLINOIS
ELIZABETH STREET
M.P. 20.14
GENEVA SUBDIVISION
D.O.T.#174 944W

1 06-16-08 INSTALL HALF BLOCK SYSTEM FROM COLLEGE AVE. TO LOMBARD, ILL. PHASE 2 PART 2. (MP. 23.76 TO MP. 20.41) AFE #89952 JJL / /CTC/MDF	MODIFICATION LEVEL		UNION PACIFIC QUALITY PRODUCTIVITY SAFETY SIGNAL DESIGN	DES: CTC
	O. A. LAST LEVEL CHECKED	DQ		DIG: CTC
	LAST LEVEL MOD THIS TYPICAL	DQ		CHK: JJL
	LAST LEVEL BY DESIGNER	DQ		A.F.E. 89952
	CHANGED FROM TYPICAL?	Y		ID= GEN2014.1AX
	MEY 02.01.08 4K 2TKUGTYP.1			

UNION PACIFIC RAILROAD

CHICAGO, ILLINOIS TO
CLINTON, IOWA
C.T.C. CIRCUITS

Office of Sr AVP Engineering - Signal/TCO Omaha, Nebraska

DATE 06-16-08
SHEET 1A
DWG 20.14
GEN

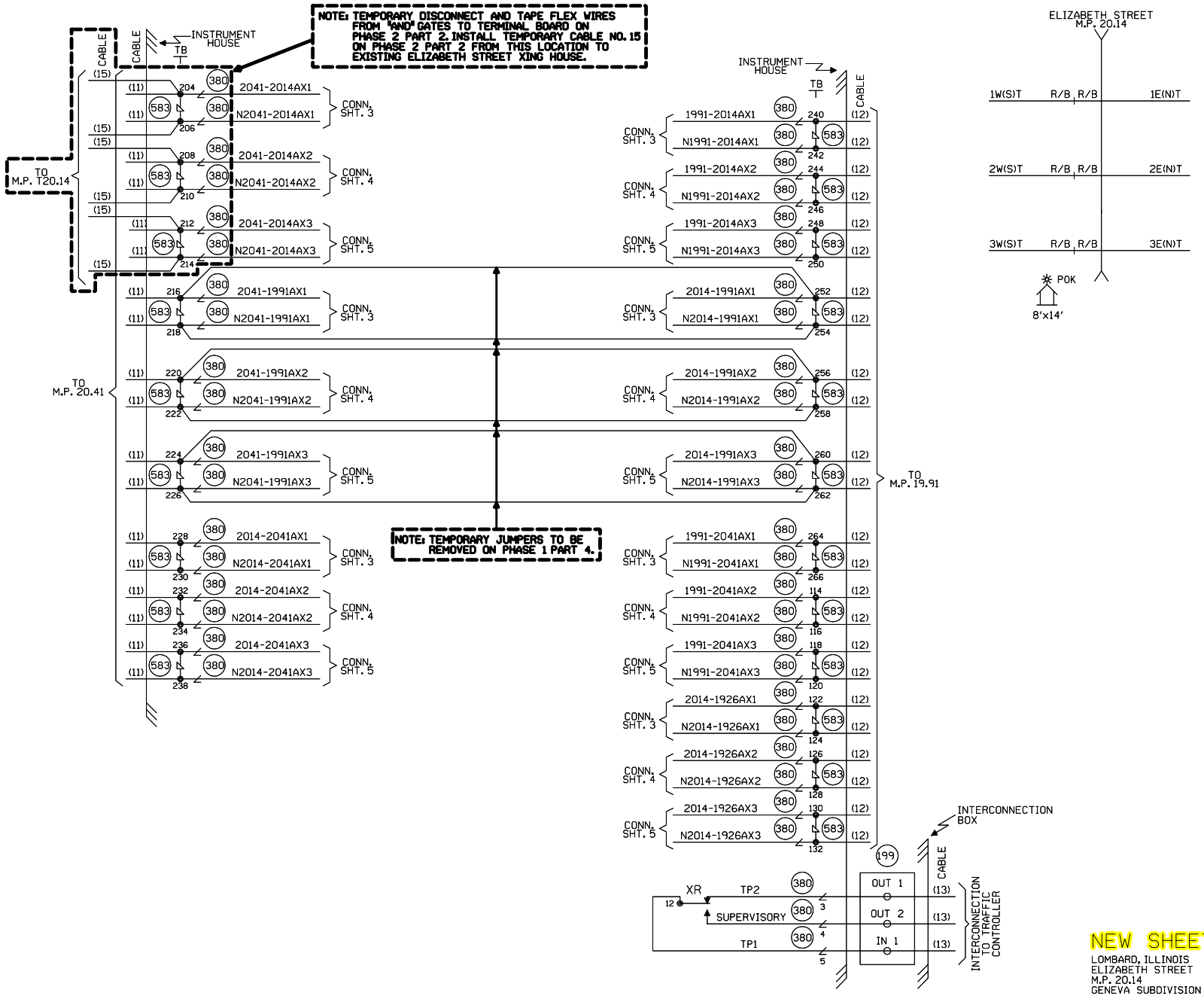

1 06-16-08 INSTALL HALF BLOCK SYSTEM FROM COLLEGE AVE. TO LOMBARD, ILL. PHASE 2 PART 2. (MP. 23.76 TO MP. 20.41) AFE #89952 JJL / /CTC/MDF	UNION PACIFIC SAFETY QUALITY PRODUCTIVITY SIGNAL DESIGN
DES: CTC	UNION PACIFIC RAILROAD
DIG: CTC	CHICAGO, ILLINOIS TO CLINTON, IOWA
CHK: JJL	C.T.C. CIRCUITS
A.F.E. 89952	Office of Sr.AVP Engineering - Signal/TCO Omaha, Nebraska
ID= GEN2014.1BX	DATE 06-16-08 / SHEET 1B / DWG 20.14 / GEN

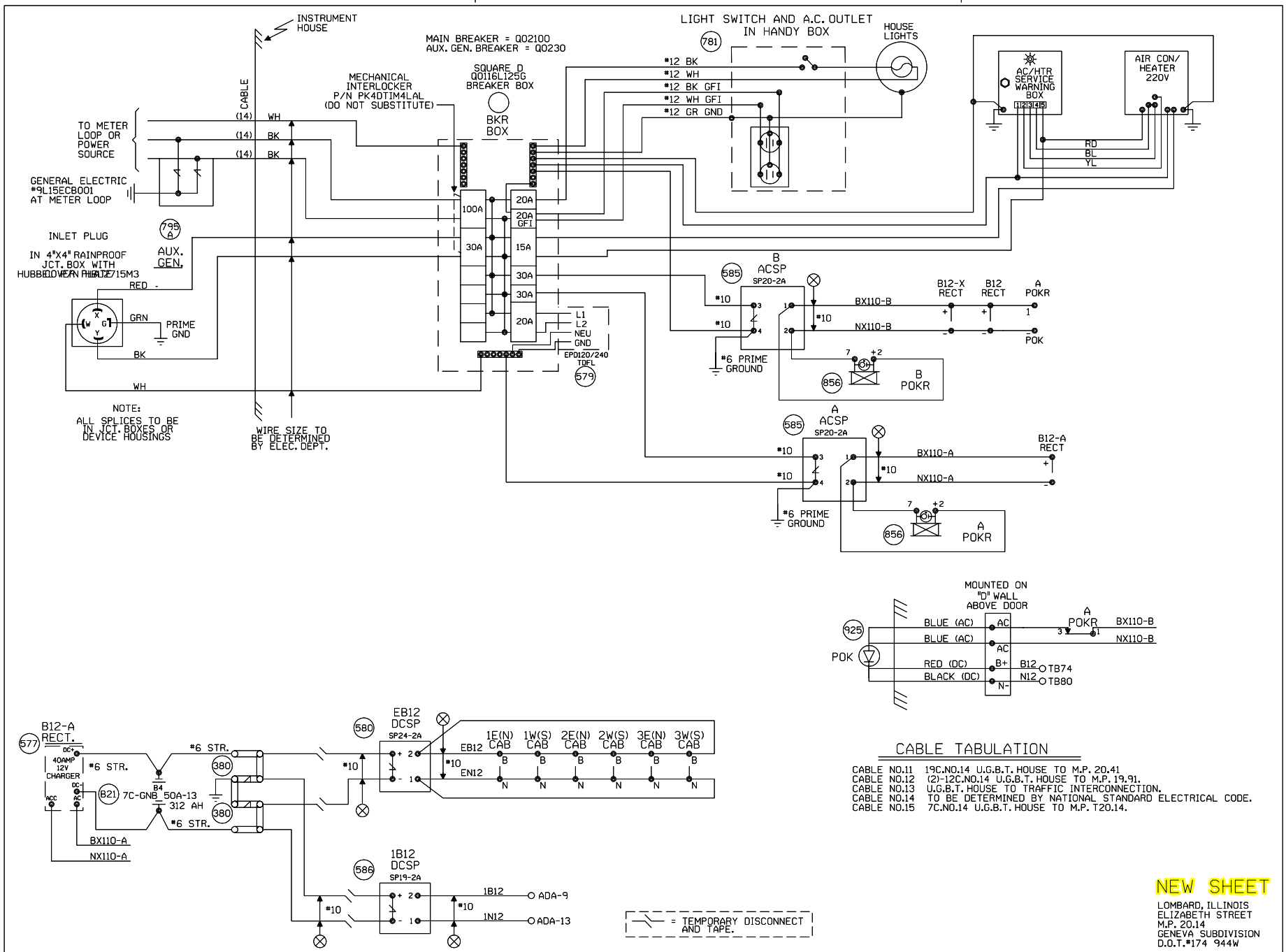

CABLE TABULATION

CABLE NO.11 19C.NO.14 U.G.B.T. HOUSE TO M.P. 20.41
CABLE NO.12 (2)-12C.NO.14 U.G.B.T. HOUSE TO M.P. 19.91.
CABLE NO.13 U.G.B.T. HOUSE TO TRAFFIC INTERCONNECTION.
CABLE NO.14 TO BE DETERMINED BY NATIONAL STANDARD ELECTRICAL CODE.
CABLE NO.15 7C.NO.14 U.G.B.T. HOUSE TO M.P. T20.14.

NEW SHEET

LOMBARD, ILLINOIS
ELIZABETH STREET
M.P. 20.14
GENEVA SUBDIVISION
D.O.T.#174 944W

1 06-16-08 INSTALL HALF BLOCK SYSTEM FROM COLLEGE AVE. TO LOMBARD, ILL. PHASE 2 PART 2. (MP. 23.76 TO MP. 20.41) AFE #89952 JJL /CTC/MDF	MODIFICATION LEVEL		UNION PACIFIC QUALITY PRODUCTIVITY SAFETY SIGNAL DESIGN	DES: CTC	UNION PACIFIC RAILROAD	DATE 06-16-08
	Q.A. LAST LEVEL CHECKED	DQ		DIG: CTC	CHICAGO, ILLINOIS TO CLINTON, IOWA	SHEET 2
	LAST LEVEL MOD THIS TYPICAL	DQ		CHK: JJL	C.T.C. CIRCUITS	DWG 20.14
	LAST LEVEL BY DESIGNER	DQ		A.F.E. 89952	Office of Sr AVP Engineering - Signal/TCO Omaha, Nebraska	GEN
	CHANGED FROM TYPICAL?	Y		ID= GEN2014.2X		
	rev 02.01.08 4K SEARAC.2					

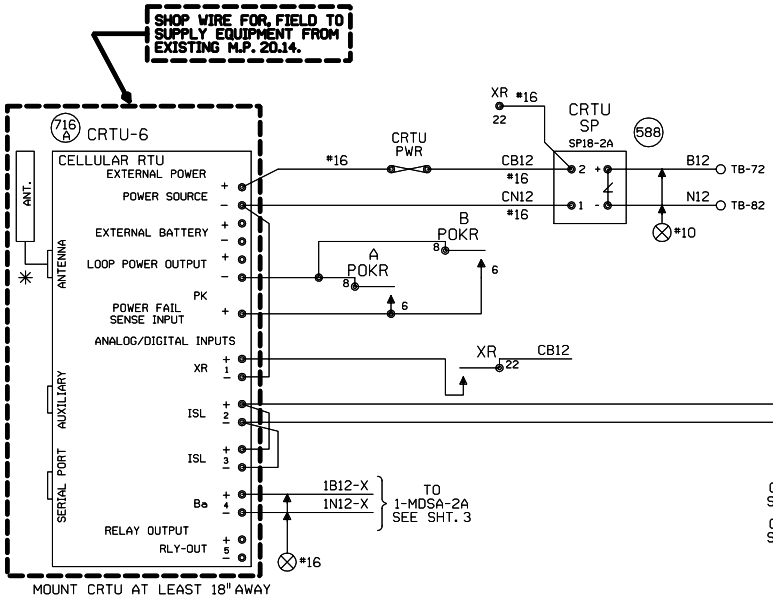

NOTE: REUSE EXISTING CRTU FROM RETIRED ELIZABETH STREET XING BUNGALOW.

NOTES:

ALL DIODES 1N5060 OR 1N4004 UNLESS OTHERWISE NOTED.

✳ MOUNT ANTENNA ON TOP OF HOUSE.

ALL WIRES #18 UNLESS OTHERWISE NOTED.

ALL UNUSED 'NC' INPUTS MUST BE TIED HIGH TO BATTERY

ALL UNUSED ANALOG INPUTS MUST BE TIED HIGH TO BATTERY

ALL UNUSED 'NO' INPUTS MUST BE DISCONNECTED

ANALOG AND AC INPUT MODULES MUST BE MOUNTED LESS THAN 12" FROM CRTU

CRTU FRONT PANEL DISPLAY CHART INDICATES NORMAL STATE

■ DIGITAL INPUT HIGH, OR POWER FAIL INPUT CLOSED

□ DIGITAL INPUT LOW, OR POWER FAIL INPUT OPEN

NORMAL STATE FOR ANALOG CHANNELS IS EQUAL TO THE STORED NOMINAL VOLTAGE +120% OR -81%

■ L ← LATCH IS SET BECAUSE CRTU DETECTED AN ALARM CONDITION

12.06V L

'sRUN MODE' 'sRUN MODE-SILENT'

CRTU RADIO IS DISABLED. REPROGRAM CRTU WITH LAPTOP.

UNIT INSTALLATION AND SETUP

R.R. SITE ID WHERE: SSSS = 4 CHARACTER SUBDIVISION ID. FILL WITH PRECEDING ZEROS AS REQUIRED. THE MAIN TRACK SUBDIVISION ID* IS IN THE CURRENT TIMETABLE. INDUSTRIAL LEADS, LEASED, AND LEAD TRACKS LISTED WITHIN THE SUBDIVISION MAY HAVE THEIR OWN UNIQUE SUBDIVISION ID*. ALWAYS REFER TO CURRENT PRINTED COPY OF THE TIMETABLE.
LLLLLLLL = 8 CHARACTERS USE DOT* AT CROSSINGS, AND
WDLLLLLL = USE 'WD' THEN MP* AT WAYSIDE LOCATIONS.
EXAMPLE = 0785WD1801.5UT
HBLLLLLL = USE 'HB' THEN MP* AT HBD SITES.
EXAMPLE = 0100-HB55.62TX
THE MP* MUST USE A DECIMAL POINT TO SEPARATE NUMBERS. FILL WITH PRECEDING DASHES AS REQUIRED.
AA = 2 CHARACTER STATE NAME FOR ALL LOCATIONS.
MUST BE 14 CHARACTERS LONG, NO SPACES ALLOWED.

SITE IDENTIFIER: SSSSLLLLLLLLAA	0001-174944WIL
OPERATION TO RESUME:	RUN
SIGNAL STRENGTH dBm	-65dBm
CARRIER ID	00020
FIRMWARE VERSION	2.3.012
BOOT VERSION:	
CMM VERSION:	
SERIAL NUMBER	03-03104-2801
MIN ASSIGNMENT	
ESN: (MICROBURST ONLY)	
CONFIGURATION NET	MICROBURST
SILENCE INTERVAL	60 MINUTES
HEALTHCHECK INTERVAL	EVERY 2 DAYS
ALARM DEFER DELAY	240 MINUTES (4 HOURS)
SIGNAL STATUS	STRONG
SCADANET STATUS	GOOD
CALIBRATION CONSTANT CH1	
CALIBRATION CONSTANT CH2	
CALIBRATION CONSTANT CH3	
CALIBRATION CONSTANT CH4	13.10
CALIBRATION CONSTANT PS	15.13

FIELD PROVIDES: SAMPLED NOMINAL VOLTAGES, SCADANET STATUS CALIBRATION CONSTANTS, SERIAL NUMBER, AND SIGNAL STATUS.

CHANNEL SETUP - STANDARD CONFIGURATION 11:XR,ISL,ISL,Ba

CHANNEL NORMAL STATE	SENSE (NO/NC)	NAME FUNCTION	RECOGNITION DELAY SECONDS ACTIVE	RECOGNITION DELAY SECONDS NORMAL	RETURN TO NORMAL	REPORTING MODE	ALARM LINKED CHANNEL	ALARM LINKED CRITERIA	EVENT LOGGING ENABLED OPTIONS
POWER FAIL (CH5) ■	POWER FAIL DETECT NO	PF:in-PK AC POWER FAIL	7,200 ALARM	300 NORMAL	ENABLED	ALERT	DISABLED	N/A	
CH1 □ ■	DIGITAL INPUT NO	CH1-XR XR DOWN TO LONG	1,800 ALARM	1 NORMAL	ENABLED	ALERT	DISABLED	N/A	
CH2 ■ □	DIGITAL INPUT NC	CH2-ISL ISLONLY ISLAND OCCUPIED DAX, PREEMPT WARNING TIME	1 ACTIVE	1 NORMAL	DISABLED	STATUS ONLY	DISABLED	N/A	
CH3 ■ □	DIGITAL INPUT NC	CH3-ISL ISLAND OCCUPIED DAX, PREEMPT WARNING TIME	1 ACTIVE	1 NORMAL	DISABLED	STATUS ONLY	DISABLED	N/A	DIGITAL EVENTS
CH4 STORED NOMINAL VOLTAGE	ANALOG INPUT N/A	CH4-Ba/V BATTERY MONITOR BATTERY LOW	600 ALARM	1200 NORMAL	ENABLED	ALERT W/UPDATE	DISABLED	N/A	CH1-XR CH2-ISL CH3-ISL
POWER SOURCE (CH6)	ANALOG INPUT N/A	PS-Ba/V BATTERY MONITOR BATTERY LOW	600 ALARM	1200 NORMAL	ENABLED	ALERT W/UPDATE	DISABLED	N/A	

ANALOG CHANNEL	USEFUL RANGE VOLTS LOW	USEFUL RANGE VOLTS HIGH	DISPLAYED RANGE VOLTS LOW	DISPLAYED RANGE VOLTS HIGH	RELATIVE ALARM POINT LOW	RELATIVE ALARM POINT HIGH	ABSOLUTE ALARM POINT LOW	ABSOLUTE ALARM POINT HIGH	AUTOMATIC UPDATE INTERVAL	STORED NOMINAL VOLTAGE	SAMPLED NOMINAL VOLTAGE
CH4	0.0	30.00	0.0	30.00	81%	120%	10.0	29.0	14 DAYS	12.69	
POWER SOURCE	0.0	30.00	0.0	30.00	81%	120%	10.0	29.0	14 DAYS	12.69	
RELAY OUTPUT	NAME RLY-OUT		ACTIVE SET-UP-OPEN		NORMAL CLR-DN-CLOSE		PULSE DURATION		15 SECONDS	StdCfg Ver: 2.3.3 REV'D 9-20-02	

MAINTENANCE OPERATIONS

TO START OR ABORT ANY PROCEDURE

1. PRESS THE 'CANCEL' BUTTON FIRST

WHEN RESPONDING TO A CALL, PUT THE CRTU IN THE 'SILENCE ALARMS' MODE

1. PRESS 'SELECT' AND THEN '+ ARROW' BUTTON UNTIL
   DISPLAY: ACTION? SILENCE ALARMS
2. PRESS THE 'SELECT' BUTTON TWICE
3. CORRECT PROBLEM AND SIMULATE NORMAL TRAIN MOVEMENT THROUGH THE LOCATION
4. EXAMINE EACH CHANNEL ON THE CRTU
5. PRESS THE '+/- ARROW' BUTTON VERIFY ALL CHANNELS INDICATE A NORMAL STATE NORMAL STATES ARE ON THE CHANNEL SETUP CHART

CLEAR TIMERS, LATCHES AND SEND ALL NORMAL

1. DO STEPS #1 - #5 ABOVE, AND PRESS 'CANCEL'.
2. PRESS 'SELECT' AND THEN '- ARROW' BUTTON UNTIL
   DISPLAY: ACTION? SERVICE MODE
3. PRESS 'SELECT' AGAIN TO RESET TIMERS, AND IF
   DISPLAY: SERVICE MODE ALL NORMAL
4. PRESS 'SELECT' AGAIN TO CLEAR LATCHES, AND SEND ALL NORMAL. SKIP STEPS #5-#6.
5. HOWEVER, IF ALARMS ARE NOT CLEARED;
   DISPLAY: SERVICE MODE ALARMS PENDING/PRESENT
6. PRESS 'CANCEL', CORRECT PROBLEM AND REPEAT STEPS #2 THRU #5 UNTIL ALL NORMAL SENT.

TO CANCEL THE 'SILENCE ALARMS' MODE

1. PRESS 'SELECT' AND THEN '+ ARROW' BUTTON UNTIL
   DISPLAY: ACTION? CANCEL SILENCE
2. PRESS THE 'SELECT' BUTTON AGAIN

EXAMINE & SET BATTERY VOLTAGE NOMINAL VALUE

1. PRESS THE '+ ARROW' OR '- ARROW' BUTTON UNTIL THE DESIRED CHANNEL IS DISPLAYED.
   DISPLAY: PS-Ba: 13.83V NORMAL
2. VERIFY THE DISPLAYED READING WITH A DIGITAL VOLTMETER
3. PRESS THE 'SELECT' BUTTON, AND THE CRTU DISPLAY WILL SWITCH BETWEEN CURRENT/SAVED NOMINAL VOLTAGE VALUES.
   DISPLAY: NOMINAL ON #6? (CURRENT) 13.83
   DISPLAY: SAVED NOMINAL 6 (STORED) 12.69
4. PRESS THE 'SELECT' BUTTON AND THE CURRENT OR 'NOMINAL ON' VALUE WILL BE SAMPLED AND STORED AS THE 'SAVED NOMINAL' VALUE
5. VERIFY THE 'NOMINAL ON' AND 'SAVED NOMINAL' VALUES ARE EQUIVALENT, REPEAT STEPS #1 THRU #3 & PRESS THE 'CANCEL' BUTTON.

NEW SHEET

LOMBARD, ILLINOIS
ELIZABETH STREET
M.P. 20.14
GENEVA SUBDIVISION
D.O.T.#174 944W

1 06-16-08
INSTALL HALF BLOCK SYSTEM FROM COLLEGE AVE. TO LOMBARD, ILL. PHASE 2 PART 2. (MP. 23.76 TO MP. 20.41) AFE #89952
JJL
/ /CTC/MDF

UNION PACIFIC
QUALITY PRODUCTIVITY SAFETY
SIGNAL DESIGN

DES:	CTC
DIG:	CTC
CHK:	JJL
A.F.E.	89952
ID= GEN2014.2AX	

UNION PACIFIC RAILROAD

CHICAGO, ILLINOIS TO CLINTON, IOWA
C.T.C. CIRCUITS

Office of Sr AVP Engineering - Signal/TCO Omaha, Nebraska

DATE	06-16-18
SHEET	2A
DWG	20.14
	GEN

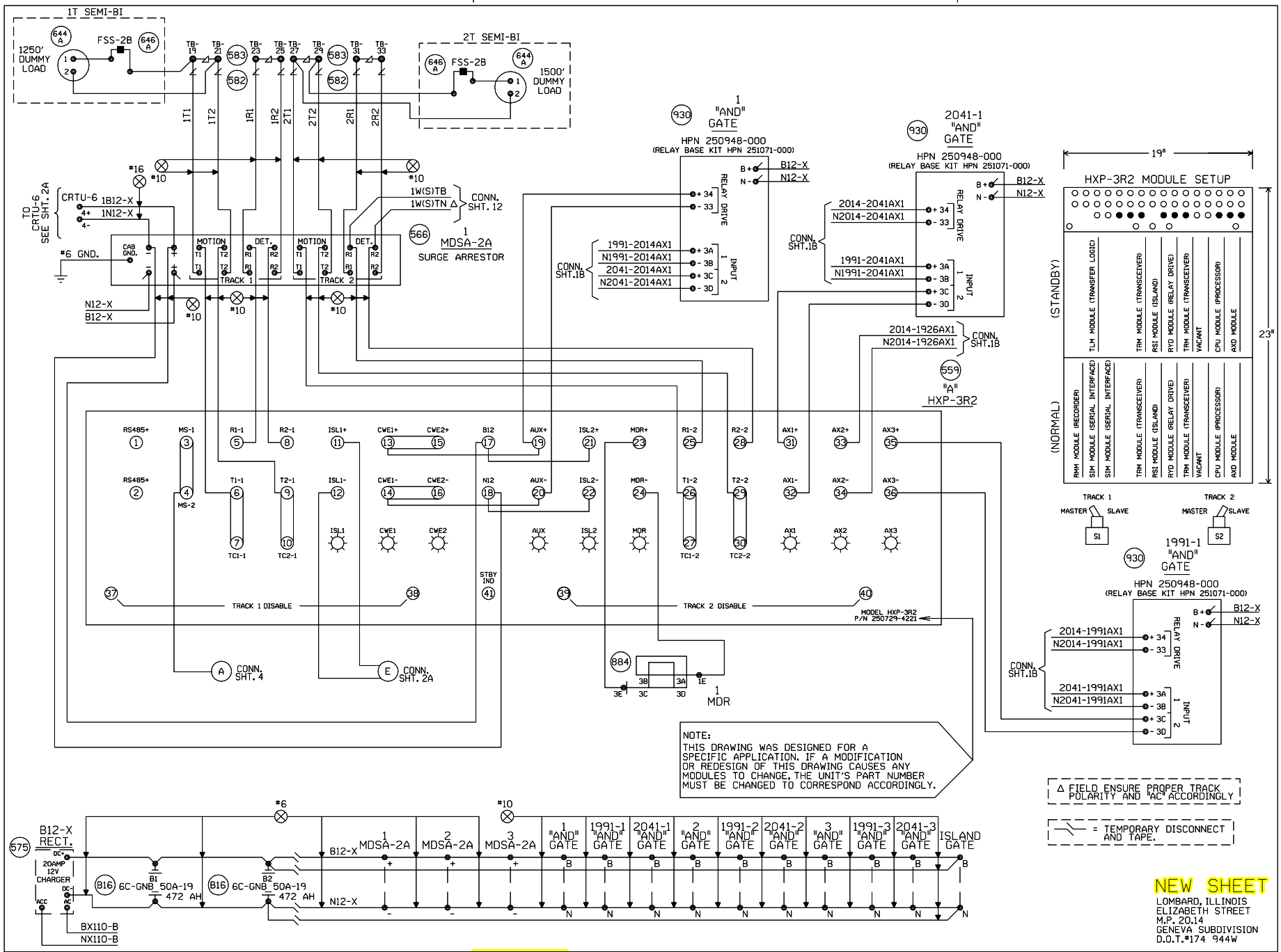

1 06-16-08 INSTALL HALF BLOCK SYSTEM FROM COLLEGE AVE. TO LOMBARD, ILL. PHASE 2 PART 2. (MP. 23.76 TO MP. 20.41) AFE #89952 JJL / /CTC/MDF	MODIFICATION LEVEL		UNION PACIFIC QUALITY PRODUCTIVITY SAFETY SIGNAL DESIGN	DES: CTC	UNION PACIFIC RAILROAD	DATE 06-16-08	
	Q.A. LAST LEVEL CHK'D.	DD		DIG: CTC	CHICAGO, ILLINOIS TO CLINTON, IOWA	SHEET 3	
	LAST LEVEL MOD. THIS TYP.	DB		CHK: JJL	C.T.C. CIRCUITS	DWG 20.14	
	LAST LEVEL BY DESIGNER.	DQ		A.F.E. 89952	Office of Sr AVP Engineering - Signal/TCO Omaha, Nebraska	GEN	
	CHANGED FROM TYP.? Y/N	Y		ID= GEN2014.3X			

(REV. 01.02.21) (HX32TKUG.4)

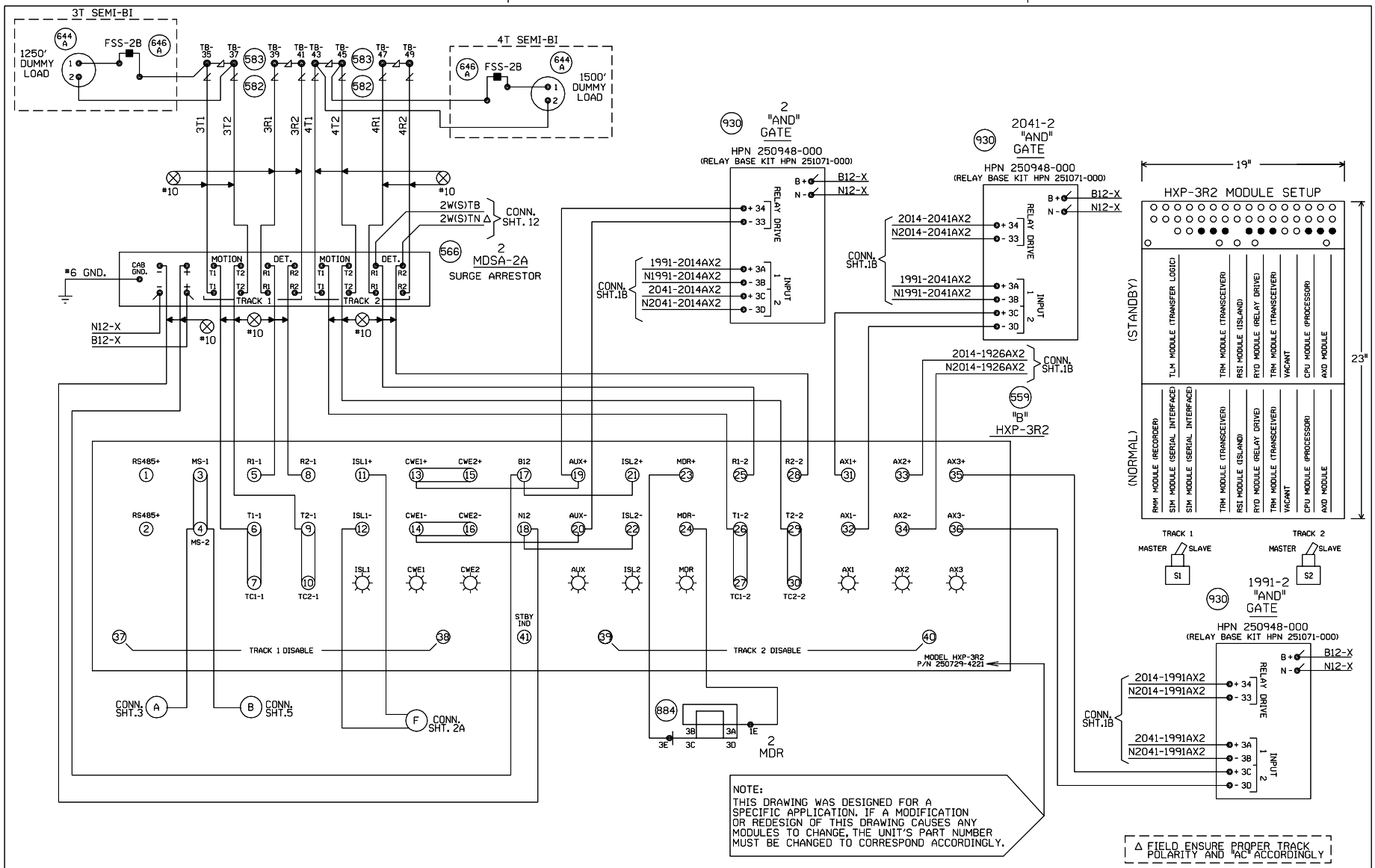

NEW SHEET

LOMBARD, ILLINOIS
ELIZABETH STREET
M.P. 20.14
GENEVA SUBDIVISION
D.O.T.#174 944W

1 06-16-08 INSTALL HALF BLOCK SYSTEM FROM COLLEGE AVE. TO LOMBARD, ILL. PHASE 2 PART 2. (MP. 23.76 TO MP. 20.41) AFE #89952 JJL / /CTC/MDF	MODIFICATION LEVEL		UNION PACIFIC QUALITY PRODUCTIVITY SAFETY SIGNAL DESIGN	DES: CTC	UNION PACIFIC RAILROAD	DATE 06-16-08
	Q.A. LAST LEVEL CHK'D.	DD		DIG: CTC	CHICAGO, ILLINOIS TO CLINTON, IOWA C.T.C. CIRCUITS	SHEET 4
	LAST LEVEL MOD. THIS TYP.	DB		CHK: JJL		DWG 20.14
	LAST LEVEL BY DESIGNER.	DQ		A.F.E. 89952		GEN
	CHANGED FROM TYP.? Y/N	Y		ID= GEN2014.4X	Office of Sr AVP Engineering - Signal/TCO Omaha, Nebraska	

(REV. 01.02.21) (HX32TKUG.5)

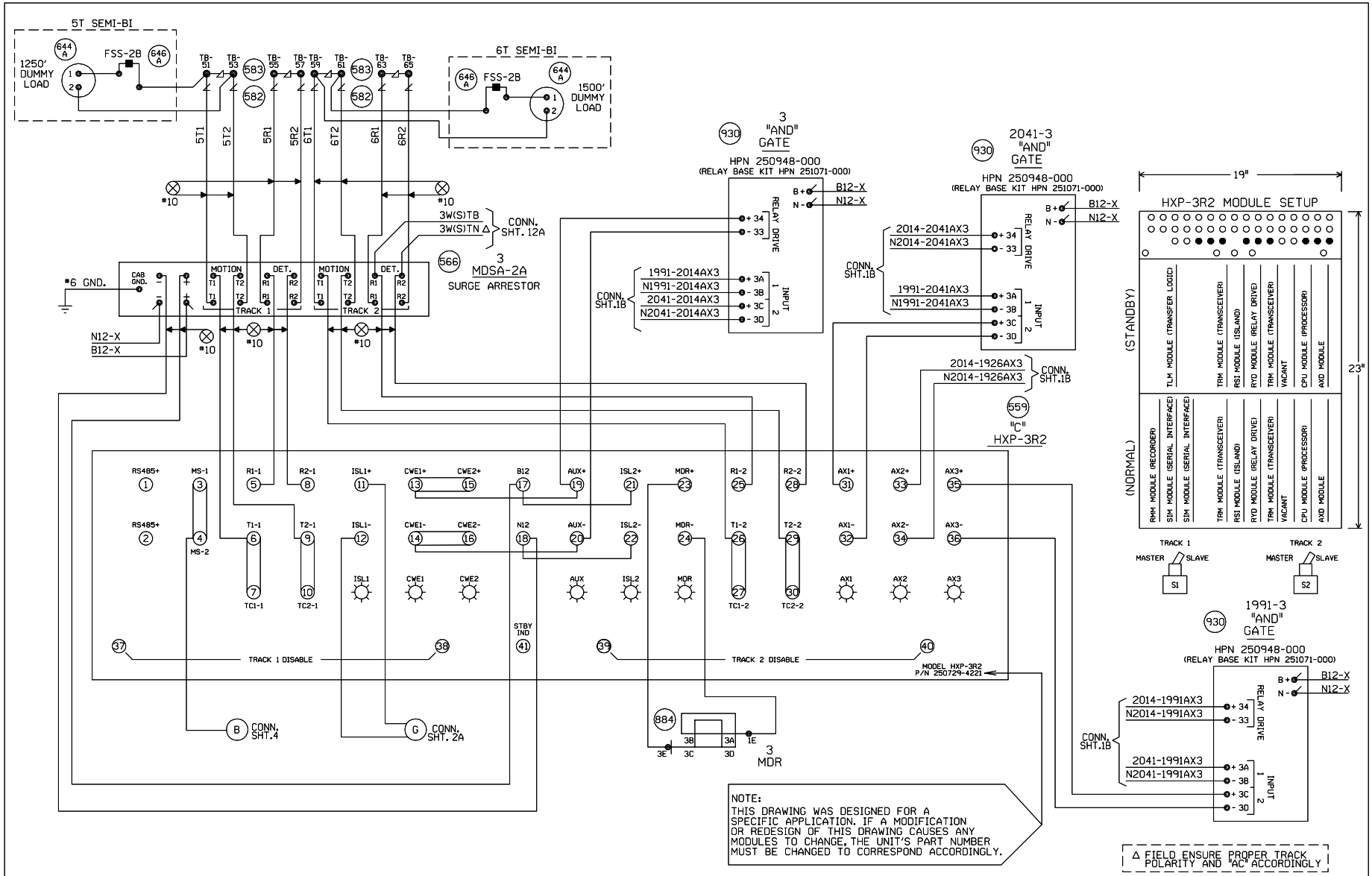

NEW SHEET

LOMBARD, ILLINOIS
ELIZABETH STREET
M.P. 20.14
GENEVA SUBDIVISION
D.O.T.#174 944W

1 06-16-08 INSTALL HALF BLOCK SYSTEM FROM COLLEGE AVE. TO LOMBARD, ILL. PHASE 2 PART 2. (MP. 23.76 TO MP. 20.41) AFE #89952 JJL /CTC/MDF	MODIFICATION LEVEL		UNION PACIFIC QUALITY PRODUCTIVITY SAFETY SIGNAL DESIGN	DES: CTC	UNION PACIFIC RAILROAD	DATE 06-16-08
	Q.A. LAST LEVEL CHK'D.	DD		DIG: CTC	CHICAGO, ILLINOIS TO CLINTON, IOWA	SHEET 5
	LAST LEVEL MOD. THIS TYP.	DB		CHK: JJL	C.T.C. CIRCUITS	DWG 20.14
	LAST LEVEL BY DESIGNER.	DQ		A.F.E. 89952	Office of Sr AVP Engineering - Signal/TCO Omaha, Nebraska	GEN
	CHANGED FROM TYP.? Y/N	Y		ID= GEN2014.5X		

(REV. 01.02.21) (HX31TKBG.DGN)

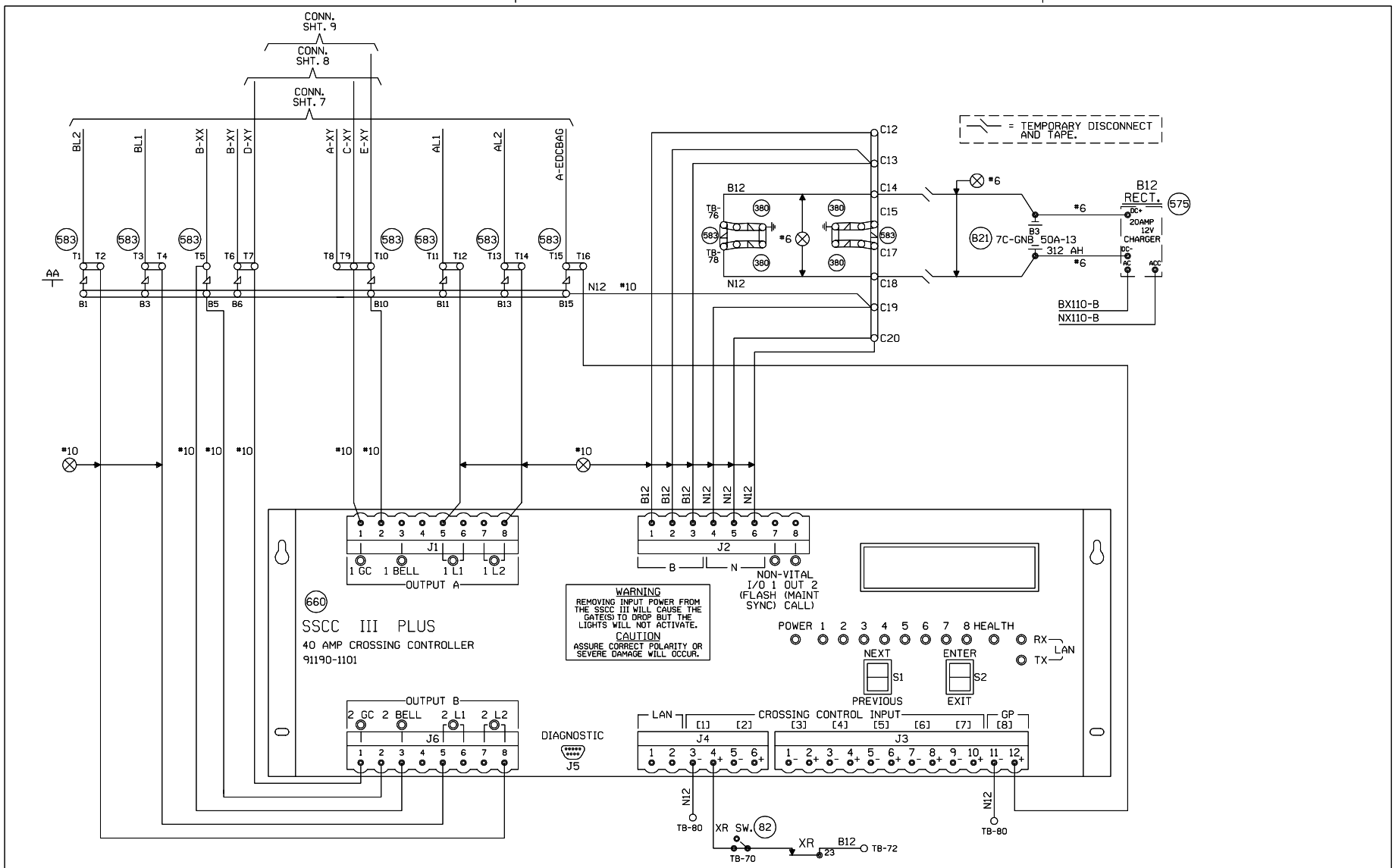

IMPORTANT

THE PROGRAM MCF AND ID LISTED BELOW MUST BE ENTERED IN THE PROGRAM SETUP ROUTINE FOR THIS SOLID STATE CROSSING CONTROLLER TO FUNCTION PROPERLY.

PROGRAM MCF: BASICPLS
PROGRAM ID: 087

EXTERNAL CROSSING CONTROLLER PROGRAM NOTE:

*1) PROGRAM INPUT 2-7 TO DISABLED

= TEMPORARY DISCONNECT AND TAPE.

NEW SHEET

LOMBARD, ILLINOIS
ELIZABETH STREET
M.P. 20.14
GENEVA SUBDIVISION
D.O.T.#174 944W

1 06-16-08 INSTALL HALF BLOCK SYSTEM FROM COLLEGE AVE. TO LOMBARD, ILL. PHASE 2 PART 2. (MP. 23.76 TO MP. 20.41) AFE #89952 JJL / /CTC/MDF	MODIFICATION LEVEL		UNION PACIFIC QUALITY PRODUCTIVITY SAFETY SIGNAL DESIGN	DES: CTC	UNION PACIFIC RAILROAD	DATE 06-16-08
	Q.A. LAST LEVEL CHECKED	DQ		DIG: CTC	CHICAGO, ILLINOIS TO CLINTON, IOWA C.T.C. CIRCUITS	SHEET 6
	LAST LEVEL MOD THIS TYPICAL	DQ		CHK: JJL		DWG 20.14
	LAST LEVEL BY DESIGNER	DQ		A.F.E. 89952		GEN
	CHANGED FROM TYPICAL?	Y		ID= GEN2014.6X	Office of Sr AVP Engineering - Signal/TCO Omaha, Nebraska	
	mv 02.01.08 4K ACDCSSCC.5					