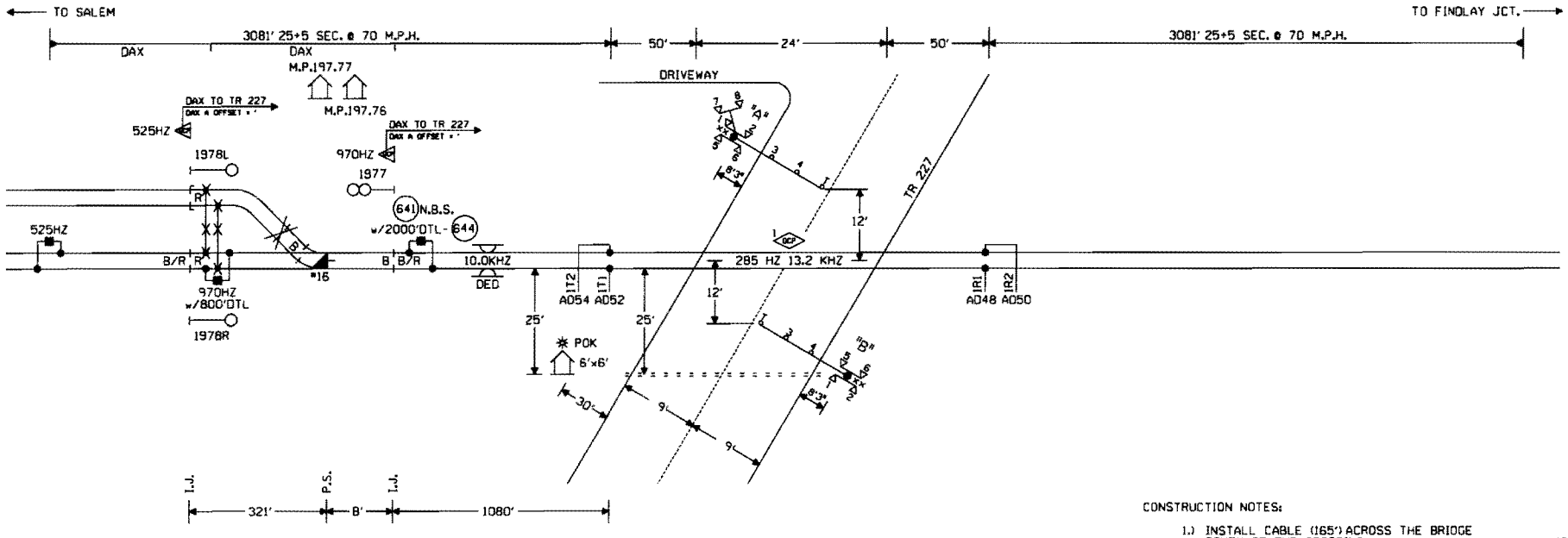

CONNECTS TO 030119776.1X

CONNECTS TO 030119549.1S

CONSTRUCTION NOTES:

1.) INSTALL CABLE (165') ACROSS THE BRIDGE SOUTH OF THE CROSSING.

2.) REMOVE THE FOULING WIRE AND SPLIT THE OS INTO A TWO TRACK CIRCUIT WITH THE FOLLOWING EQUIPMENT @ M.P. 197.77.
- (1) DC-DC CONV (TAB 613)
- (1) TRACK RELAYS (TAB 882)
- (4) RESISTORS (TAB 90)
- (1) BATTERY CHOKE (TAB 706)
- (8) ARRESTORS (TAB 582)
- (4) EQUALIZERS (TAB 583)
- (1) LOS-10 (TAB 801)
- (1) NEUTRAL RELAY (TAB 884)

3.) THE REMOTE BUNGALOW AT M.P. 197.76 WILL BE INSTALLED AS A PART OF THIS PROJECT.

4.) INSTALL DC CODE ISOLATION UNITS (TAB 626) TO THE HARDCODE CIRCUITS @ THE FOLLOWING LOCATIONS:
- M.P. 195.49, (1) SOUTH TRACK
- M.P. 197.77, (2) NORTH AND SOUTH TRACK
- M.P. 199.79, (1) NORTH TRACK

X = REMOVE

RECEIVED

OCT 27 2009

Illinois Commerce Commission
RAIL SAFETY SECTION

NOTES:

⊗ = TWISTED WIRES INSULATED 1 TWIST PER FT. ALL TRACK WIRES 2C. #6

TRANSMITTER AND RECEIVER LEADS TO BE SEPARATED BY AT LEAST 12" IN TRENCH. LENGTHS SHOULD NOT EXCEED MANUFACTURES RECOMMENDATION.

TOP OF FOUNDATION TO BE AT SAME ELEVATION AS THE SURFACE OF THE TRAVELED WAY & NO MORE THAN 4" ABOVE THE SURFACE OF THE GROUND.

ALL BUNGALOW WIRING TO BE #16 AWG FLEX UNLESS OTHERWISE SPECIFIED EXCEPT ALL GROUND WIRE TO BE #6 AWG FLEX OR LARGER.

ALL WIRING IN GATE MECHANISM TO BE #10 AWG FLEX.

REFER TO UP STANDARD DWG FOR BUNGALOW GROUNDING.

PORTABLE GENERATOR EXTENSION CORD FOR 240V TO 240V IS PROVIDED AS WELL AS A 120V TO 240V ADAPTER.

ALL LIGHTS TO BE 12" ROUNDELS.

= = = = = = 4" X 40' CONDUIT

LIGHTS: LED LIGHTS

GATE A: 17'
GATE B: 17'

xx = BELL

CRTU:

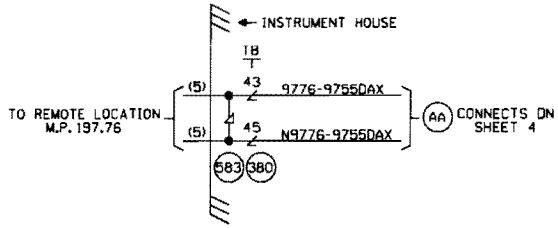

W(S) ← → E(N)

CABLE TABULATION

CABLE #5 7C #14 U.G.B.T. HOUSE TO M.P. 197.76

NEW SHEET

						INSTALL GATES AND A DCP 4000 IN A NEW BUNGALOW @ TR-227 M.P. 197.55.	MODIFICATION LEVEL		UNION PACIFIC
							G.A. LAST LEVEL CHECKED	DR	SAFETY SIGNAL DESIGN
							LAST LEVEL MOD THIS TYPICAL	DR	
							LAST LEVEL BY DESIGNER	DR	
						Rev: 88290 JNH File: WIT/JHF	CHANGED FROM TYPICAL?	Y	

Date: 9-2-08	UNION PACIFIC RAILROAD	Sh.: 1
Des: WIT	SHELBYVILLE, ILLINOIS	DOT 167869V
Chk: B.C.H.	TR 227	MP: 197.55
AFE: 88290	SALEM SUBDIVISION	ID: 030119755.1X
	Office of Sr. AVP Engineering - Signal/TCO Omaha, Nebraska	

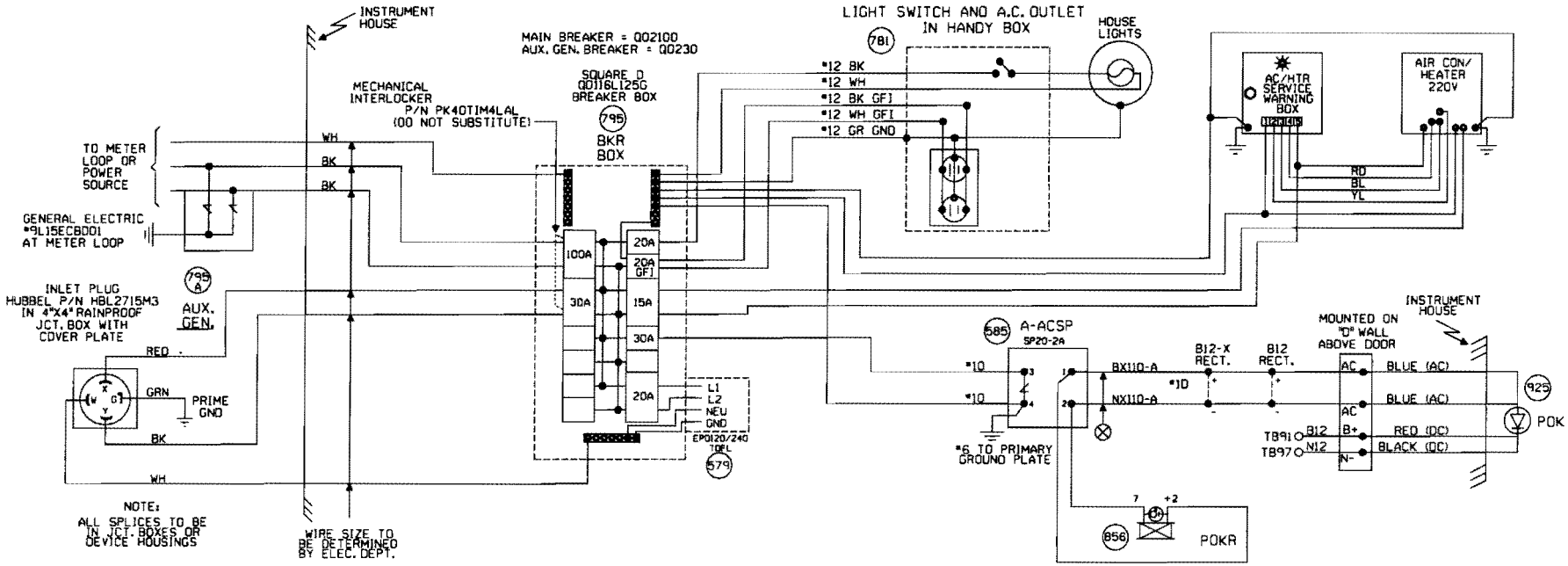

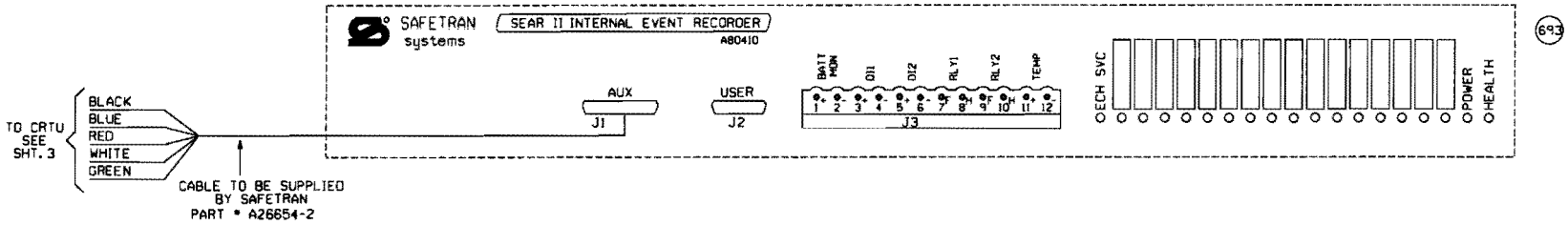

NEW SHEET

Revised 4/2/08 INSTALL GATES AND A DCP 4000 IN A NEW BUNGALOW @ TR-227 MLP. 197.55.	
Rev#:	WO#: 88290
Ins	JMM
	WIT/JJF

MODIFICATION LEVEL	
Q.A. LAST LEVEL CHECKED	DR
LAST LEVEL MOD THIS TYPICAL	DR
LAST LEVEL BY DESIGNER	DR
CHANGED FROM TYPICAL?	N
av 02.01.09 4K SEARAC.2	

UNION PACIFIC
QUALITY PRODUCTIVITY SAFETY
SIGNAL DESIGN

Date:	9-2-08
Des:	WIT
Chk:	JMM
AFE:	88290

UNION PACIFIC RAILROAD

SHELBYVILLE, ILLINOIS
TR 227
SALEM SUBDIVISION

Office of Sr. AVP Engineering - Signal/TCO Omaha, Nebraska

Sht:	2
DOT	167869V
MP:	197.55
ID:	030119755.2X

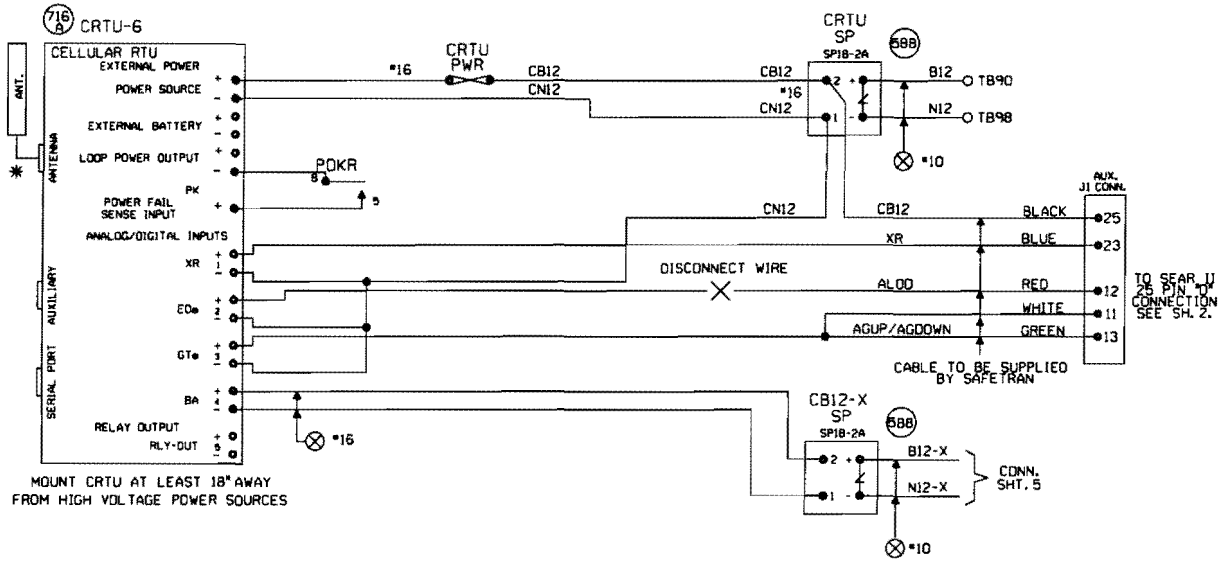

NOTES:

ALL DIODES 1N5060 OR 1N4004 UNLESS OTHERWISE NOTED.

* MOUNT ANTENNA ON TOP OF HOUSE.
  INSTALL ANTENNA CABLE AND CHOKE PER TECH BULLENTIN #99-0015-00

ALL WIRES #18 UNLESS OTHERWISE NOTED.

ALL UNUSED 'NC' INPUTS MUST BE TIED HIGH TO BATTERY

ALL UNUSED ANALOG INPUTS MUST BE TIED HIGH TO BATTERY

ALL UNUSED 'NO' INPUTS MUST BE DISCONNECTED

NORMAL STATE FOR ANALOG CHANNELS IS EQUAL TO THE STORED NOMINAL VOLTAGE +120% OR -81%

CRTU FRONT PANEL DISPLAY CHART INDICATES NORMAL STATE

■ DIGITAL INPUT HIGH, OR POWER FAIL INPUT CLOSED ☐ DIGITAL INPUT LOW, OR POWER FAIL INPUT OPEN

■ L ← LATCH IS SET BECAUSE CRTU DETECTED AN ALARM CONDITION
12.06V L

'sRUN MODE' 'sRUN MODE-SILENT' ← CRTU RADIO IS DISABLED. REPROGRAM CRTU WITH LAPTOP.

ANALOG AND AC INPUT MODULES AND SURGE PROTECTORS MUST BE MOUNTED LESS THAN 18" FROM CRTU

ANALOG MODULES CONVERT DC VOLTAGE TO A SQUARE WAVE. A WORKING ANALOG MODULE WILL HAVE 4.5VDC TO 8.0VDC BETWEEN 5VOUT+ AND 6VOUT-. WHERE, 0VOLTS = 0HZ OUT, 30VOLTS = 10KHZ OUT, AND 15VOLTS = 5KHZ OUT

MAKE SURE CRTU IS PROGRAMMED WITH CALIBRATION SETTINGS.

CRTU CH4 CAN BE CONNECTED TO EITHER SP18 OR EQUIPMENT SIDE OF MOSAI, TAB 565

UNIT INSTALLATION AND SETUP

R.R. SITE ID WHERE: SSSS = 4 CHARACTER SUBDIVISION ID. FILL WITH PRECEDING ZEROS AS REQUIRED. THE MAIN TRACK SUBDIVISION ID* IS IN THE CURRENT TIMETABLE. INDUSTRIAL LEADS, LEASED, AND LEAD TRACKS LISTED WITHIN THE SUBDIVISION MAY HAVE THEIR OWN UNIQUE SUBDIVISION ID*. ALWAYS REFER TO CURRENT PRINTED COPY OF THE TIMETABLE.
LLLLLLLL = 8 CHARACTERS USE DOT* AT CROSSINGS, AND
WDLLLLLL = USE 'WD' THEN MP* AT WAYSIDE LOCATIONS.
EXAMPLE = 0785WD1801.5UT
HBLLLLLL = USE 'HB' THEN MP* AT HBD SITES.
EXAMPLE = 0100-HB55.62TX
THE MP* MUST USE A DECIMAL POINT TO SEPARATE NUMBERS. FILL WITH PRECEDING DASHES AS REQUIRED.
AA = 2 CHARACTER STATE NAME FOR ALL LOCATIONS.
MUST BE 14 CHARACTERS LONG. NO SPACES ALLOWED.

SITE IDENTIFIER: SSSSLLLLLLLLAA	0046-167869VIL
OPERATION TO RESUME: RUN	
SIGNAL STRENGTH dBm	
CARRIER ID	
FIRMWARE VERSION	2.3.12
SERIAL NUMBER	
BOOT VERSION:	
CMM VERSION:	
MIN ASSIGNMENT	
ESN: (MICROBURST ONLY)	
CONFIGURATION NET	*
SILENCE INTERVAL	60 MINUTES
HEALTHCHECK INTERVAL	EVERY 2 DAYS
ALARM DEFER DELAY	240 MINUTES (4 HOURS)
SIGNAL STATUS	
SCADANET STATUS	
CALIBRATION CONSTANT CH1	
CALIBRATION CONSTANT CH2	
CALIBRATION CONSTANT CH3	
CALIBRATION CONSTANT CH4	
CALIBRATION CONSTANT PS	

FIELD PROVIDES: SAMPLED NOMINAL VOLTAGES, SCADANET STATUS CALIBRATION CONSTANTS, SERIAL NUMBER, AND SIGNAL STATUS.

CHANNEL SETUP - STANDARD CONFIGURATION 32:XR,EOe,GTe,Ba

CHANNEL NORMAL STATE	SENSE (NO/NC)	NAME FUNCTION	RECOGNITION DELAY SECONDS ACTIVE	RECOGNITION DELAY SECONDS NORMAL	RETURN TO NORMAL	REPORTING MODE	ALARM LINKED CHANNEL	ALARM LINKED CRITERIA	EVENT LOGGING ENABLED OPTIONS
POWER FAIL (CH5) ■	POWER FAIL DETECT NO	PF:n-PK AC POWER FAIL	7,200 ALARM	300 NORMAL	ENABLED	ALERT	DISABLED	N/A	
CH1 ■ ☐	DIGITAL INPUT NC	CH1-XR XR DOWN TO LONG	1,800 ALARM	1 NORMAL	ENABLED	ALERT	DISABLED	N/A	ANALOG VALUE SENT
CH2 ☐ ■	DIGITAL INPUT NO	CH2-EOe LIGHT OUT	120 ALARM	10 NORMAL	ENABLED	ALERT	DISABLED	N/A	
CH3 ☐ ■	DIGITAL INPUT NO	CH3-GTe GATES NOT UP/DOWN	120 ALARM	10 NORMAL	ENABLED	ALERT	DISABLED	N/A	
CH4 STORED NOMINAL VOLTAGE	ANALOG INPUT N/A	CH4-Ba/V BATTERY MONITOR BATTERY LOW	600 ALARM	1200 NORMAL	ENABLED	ALERT W/UPDATE	DISABLED	N/A	DIGITAL EVENTS
POWER SOURCE (CH6)	ANALOG INPUT N/A	PS-Ba/V BATTERY MONITOR BATTERY LOW	600 ALARM	1200 NORMAL	ENABLED	ALERT W/UPDATE	DISABLED	N/A	PF:n-PK CH1-XR CH2-EOe CH3-GTe

ANALOG CHANNEL	USEFUL RANGE VOLTS LOW	USEFUL RANGE VOLTS HIGH	DISPLAYED RANGE VOLTS LOW	DISPLAYED RANGE VOLTS HIGH	RELATIVE ALARM POINT LOW	RELATIVE ALARM POINT HIGH	ABSOLUTE ALARM POINT LOW	ABSOLUTE ALARM POINT HIGH	AUTOMATIC UPDATE INTERVAL	STORED NOMINAL VOLTAGE	SAMPLED NOMINAL VOLTAGE
CH4	0.0	30.00	0.0	30.00	81%	120%	10.0	29.0	14 DAYS	12.69	
POWER SOURCE	0.0	30.00	0.0	30.00	81%	120%	10.0	29.0	14 DAYS	12.69	
RELAY OUTPUT	NAME RLY-OUT		ACTIVE SET-UP-OPEN		NORMAL CLR-ON-CLOSE		PULSE DURATION		15 SECONDS	StdCfg Vers 2.3.3 REV'D 9-20-02	

MAINTENANCE OPERATIONS

TO START OR ABORT ANY PROCEDURE

1. PRESS THE 'CANCEL' BUTTON FIRST

WHEN RESPONDING TO A CALL, PUT THE CRTU IN THE 'SILENCE ALARMS' MODE

1. PRESS 'SELECT' AND THEN '+ ARROW' BUTTON UNTIL
   DISPLAY: ACTION?
   SILENCE ALARMS
2. PRESS THE 'SELECT' BUTTON TWICE
3. CORRECT PROBLEM AND SIMULATE NORMAL TRAIN MOVEMENT THROUGH THE LOCATION
4. EXAMINE EACH CHANNEL ON THE CRTU
5. PRESS THE '+/- ARROW' BUTTON
   VERIFY ALL CHANNELS INDICATE A NORMAL STATE
   NORMAL STATES ARE ON THE CHANNEL SETUP CHART

CLEAR TIMERS, LATCHES AND SEND ALL NORMAL

1. DO STEPS #1 - #5 ABOVE, AND PRESS 'CANCEL'.
2. PRESS 'SELECT' AND THEN '- ARROW' BUTTON UNTIL
   DISPLAY: ACTION?
   SERVICE MODE
3. PRESS 'SELECT' AGAIN TO RESET TIMERS, AND IF
   DISPLAY: SERVICE MODE
   ALL NORMAL
4. PRESS 'SELECT' AGAIN TO CLEAR LATCHES, AND SEND ALL NORMAL, SKIP STEPS #5-#6.
5. HOWEVER, IF ALARMS ARE NOT CLEARED:
   DISPLAY: SERVICE MODE
   ALARMS PENDING/PRESENT
6. PRESS 'CANCEL', CORRECT PROBLEM AND REPEAT STEPS #2 THRU #5 UNTIL ALL NORMAL SENT.

TO CANCEL THE 'SILENCE ALARMS' MODE

1. PRESS 'SELECT' AND THEN '+ ARROW' BUTTON UNTIL
   DISPLAY: ACTION?
   CANCEL SILENCE
2. PRESS THE 'SELECT' BUTTON AGAIN

EXAMINE & SET BATTERY VOLTAGE NOMINAL VALUE

1. PRESS THE '+ ARROW' OR '- ARROW' BUTTON UNTIL THE DESIRED CHANNEL IS DISPLAYED.
   DISPLAY: PS-Ba:
   13.83V NORMAL
2. VERIFY THE DISPLAYED READING WITH A DIGITAL VOLTMETER
3. PRESS THE 'SELECT' BUTTON, AND THE CRTU DISPLAY WILL SWITCH BETWEEN CURRENT/SAVED NOMINAL VOLTAGE VALUES.
   DISPLAY: NOMINAL ON #67 (CURRENT)
   13.83
   DISPLAY: SAVED NOMINAL 6 (STORED)
   12.69
4. PRESS THE 'SELECT' BUTTON AND THE CURRENT OR 'NOMINAL ON' VALUE WILL BE SAMPLED AND STORED AS THE 'SAVED NOMINAL' VALUE
5. VERIFY THE 'NOMINAL ON' AND 'SAVED NOMINAL' VALUES ARE EQUIVALENT, REPEAT STEPS #1 THRU #3 & PRESS THE 'CANCEL' BUTTON.

* = **FIELD VERIFY CRTU CONFIGURATION**

NEW SHEET

MODIFICATION LEVEL	
Q.A. LAST LEVEL CHK'D.	DJ
LAST LEVEL MOD. THIS TYP.	DJ
LAST LEVEL BY DESIGNER.	OR
CHANGED FROM TYP.? Y/N	Y

UNION PACIFIC SIGNAL DESIGN

Date: 9-2-08
Dwn: WIT
Chk: JMM
AFE: 88290

UNION PACIFIC RAILROAD
SHELBYVILLE, ILLINOIS
TR 227
SALEM SUBDIVISION
Office of Sr. AVP Engineering - Signal/TCO Omaha, Nebraska

Sh.: 3
DOT: 167869V
MP: 197.55
ID: 030119755.3X

(REV.06.01.04) (CRTUCFG32-2BAT.3)

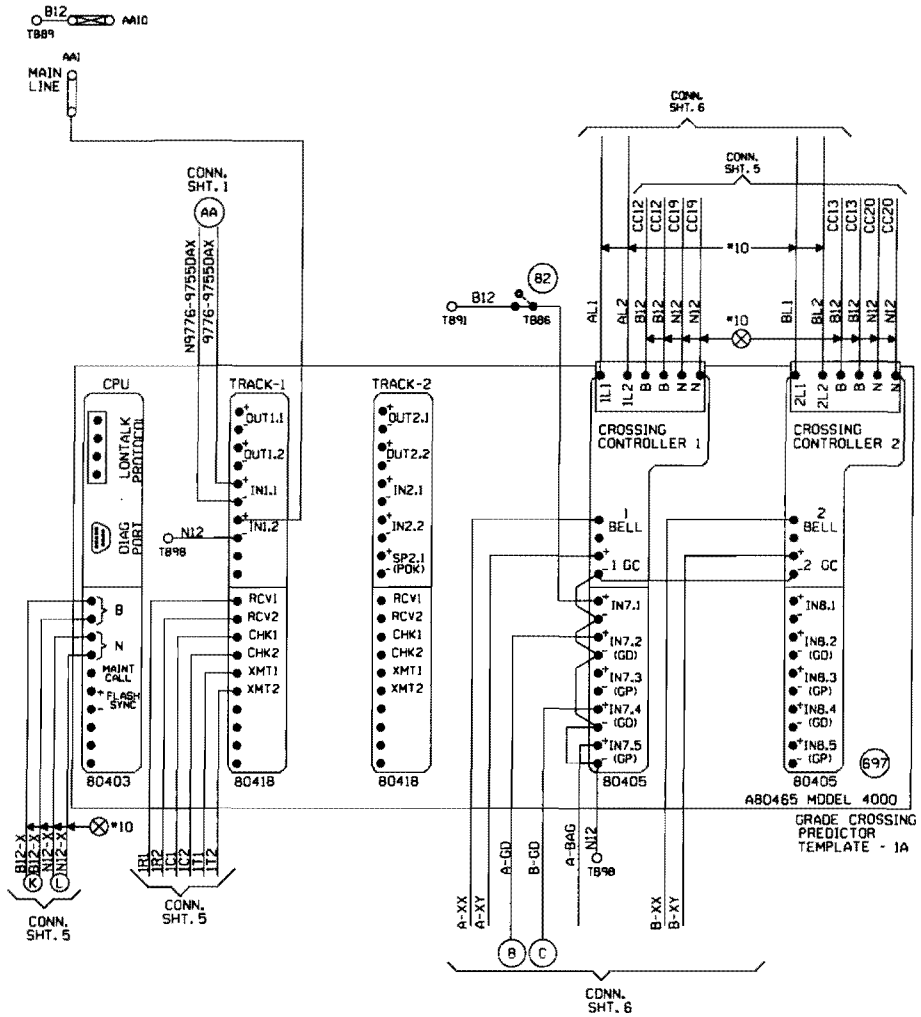

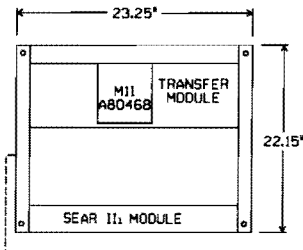

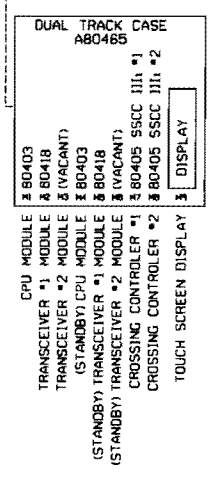

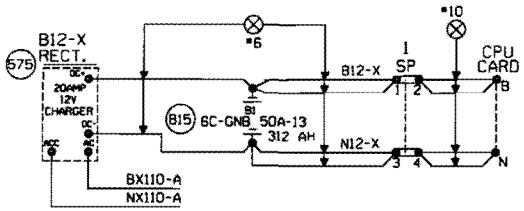

"Mf" FREQUENCY (HZ)	MAXIMUM TRANSMIT WIRE LENGTH (FEET)
86	100
114	125
156	150
211	200
285-970	250

NOTE:
EACH TRANSMITTER TO RAIL WIRE FROM XMT1 AND XMT2 MUST NOT EXCEED THE MAXIMUM LENGTH SPECIFIED IN THE TABLE SHOWN. THE RECEIVER WIRE LENGTH IS NOT CRITICAL. DOES NOT APPLY TO 6 TRACK WIRE APPLICATION.

NEW SHEET

Revised 9/2/08 INSTALL GATES AND A BCP 4000 IN A NEW BUNGALOW @ TR-227 MP. 197.55.
Rev#: 7B
WO#: 88290 JBM WIT/JJP

MODIFICATION LEVEL	
O. A. LAST LEVEL CHECKED	DR
LAST LEVEL MOD THIS TYPICAL	DR
LAST LEVEL BY DESIGNER	DR
CHANGED FROM TYPICAL?	Y

rev 02.01.01 4K ZTKGP.3

UNION PACIFIC
SAFETY PRODUCTIVITY QUALITY
SIGNAL DESIGN

Date:	9-2-08
Des:	WIT
Chk:	JMM
AFE:	88290

UNION PACIFIC RAILROAD
SHELBYVILLE, ILLINOIS
TR 227
SALEM SUBDIVISION
Office of Sr VP Engineering - Signal/TCO Omaha, Nebraska

Sht:	4
DOT:	167869V
MP:	197.55
ID:	030119755.4X

Minimum Program Steps Report

Location and SIN

DOT Number: 167869V
Milepost Number: 197.55
Site Name: Shelbyville, IL

SIN: 762010010016 *

* Parameter is part of office check number calculation.

MCF and Template Selection

MCF Name: GCP-T6X-02-1.mcf
MCF Revision: 021
MCFCRC: 6076E435

Template = 1A:6 Trk Bi *

* Parameter is part of office check number calculation.

Minimum Program Steps

TEMPLATE: track 1-Bi, Island
Track 1 : GCP Frequency = 285 Hz
Track 1 : Approach Distance = 3081 ft
Track 1 : Prime Warning Time = 25 sec
Track 1 : GCP Transmit Level = Medium (Set in Field)
Track 1 : Isl Frequency = 13.2 kHz

TEMPLATE: AND 1 XR
AND 1 Enable Used = Yes *

TEMPLATE: SSCC
SSCC 1 : Lamp Neutral Test = Off (Set in Field)
SSCC 2 : Lamp Neutral Test = Off (Set in Field)

TEMPLATE: OOS
OOS Control = OOS IPs *

TEMPLATE: IP assignment 1
IN 1.1 = AND 1 XR Enable *
IN 1.2 = Out Of Service IP 1 *

TEMPLATE: IP assignment SSCC
IN 7.1 = AND 1 XR Enable *

GCP: track 1
Track 1 : Island Distance = 124 ft *

* Parameter is part of office check number calculation.

Check Numbers

Office Check No. (DT 4.6.0): 4CF7CF13
Office Check Number: 4CF7CF13
Config. Check Number: 79BC78C8
(Based on MCF Revision 021)

Parameters not part of office check number calculation:

Track 1 : GCP Frequency = 285 Hz
Track 1 : Approach Distance = 3081 ft
Track 1 : Prime Warning Time = 25 sec
Track 1 : GCP Transmit Level = Medium (Set in Field)
Track 1 : Isl Frequency = 13.2 kHz
SSCC 1 : Lamp Neutral Test = Off (Set in Field)
SSCC 2 : Lamp Neutral Test = Off (Set in Field)

Comments

<none>

Configuration Package File

Filename: 030119755_167869V.pac
Path: C:\PAC File\
Date/Time: 5/13/2009 14:40:40
DT Version: 4.8.5

NEW SHEET

				Designed: 9/2/08 INSTALL GATES AND A GCP 4000 IN A NEW BUNGALOW @ TR-227 MLP. 197.55. Rev: WO: 88290 ID: JMM /WIT/JJF	**NOTE: Actual OFFSET and ISLAND distances must be verified by field personnel.**	UNION PACIFIC SIGNAL DESIGN	Date: 9-2-08 Des: WIT Chk: JMM AFE: 88290	**UNION PACIFIC RAILROAD** SHELBYVILLE, ILLINOIS TR 227 SALEM SUBDIVISION Office of Sr AVP Engineering - Signal/TCO Omaha, Nebraska	Sh.: 4A DOT 167869V MP: 197.55 ID: 030119755.4AX

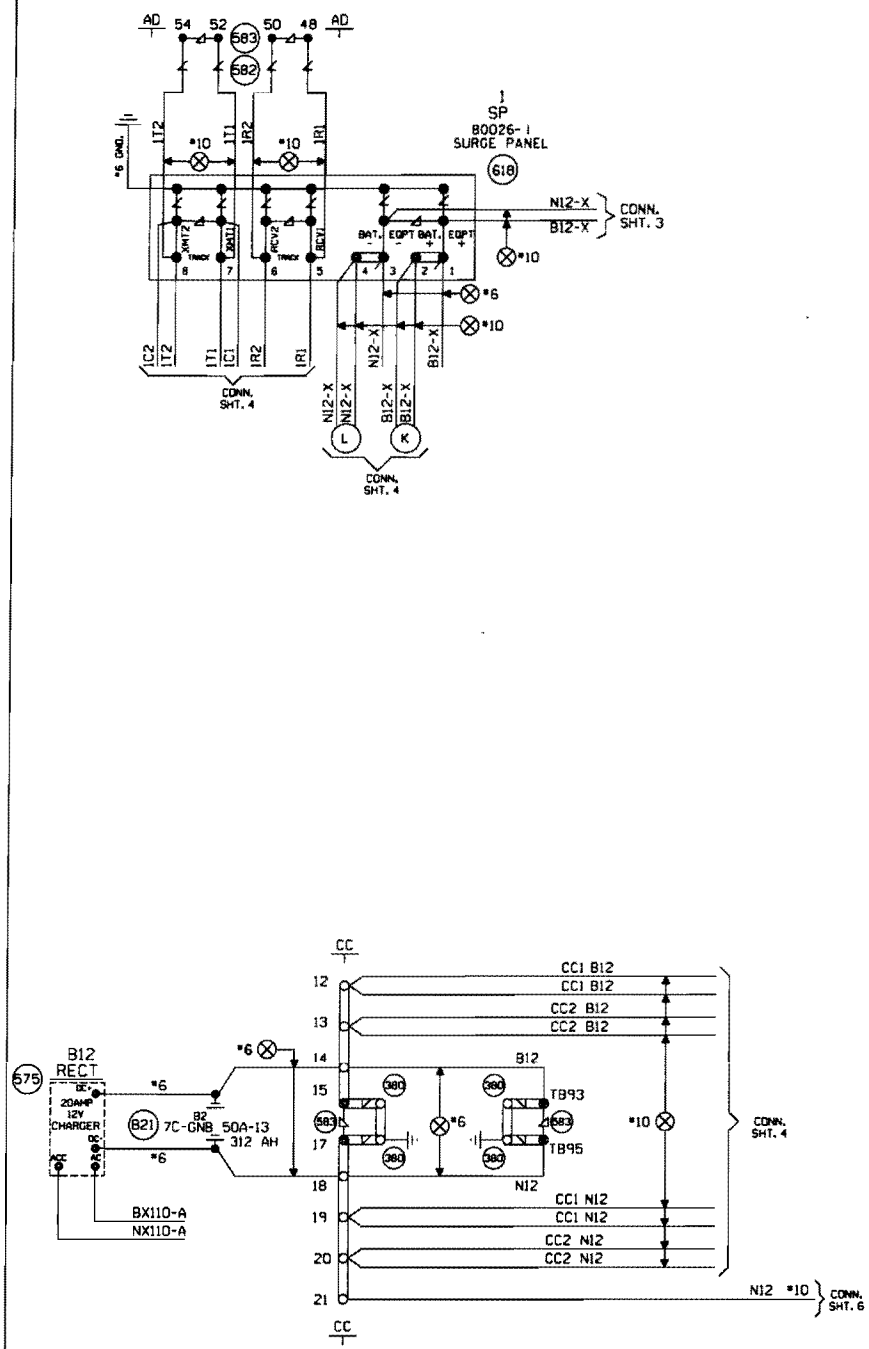

NEW SHEET

Designed: 9/2/08 INSTALL GATES AND A GCP 4000 IN A NEW BUNGALOW @ TR-227 M.P. 197.55. Rev#: WOP: 88290 JMM WIT/JJF	MODIFICATION LEVEL		UNION PACIFIC SIGNAL DESIGN	Date: 9-2-08	UNION PACIFIC RAILROAD	Sh.: 5
	Q.A. LAST LEVEL CHECKED	DR		Des: WIT	SHELBYVILLE, ILLINOIS	DOT 167869V
	LAST LEVEL MOD THIS TYPICAL	DR		Chk: JMM	TR 227	MP: 197.55
	LAST LEVEL BY DESIGNER	DR		AFE: 88290	SALEM SUBDIVISION	ID: 030119755.5X
	CHANGED FROM TYPICAL?	Y			Office of Sr. AVP Engineering - Signal/TCO Omaha, Nebraska	
	Rev 02.01.09 4K 4TKSPCFC.4					

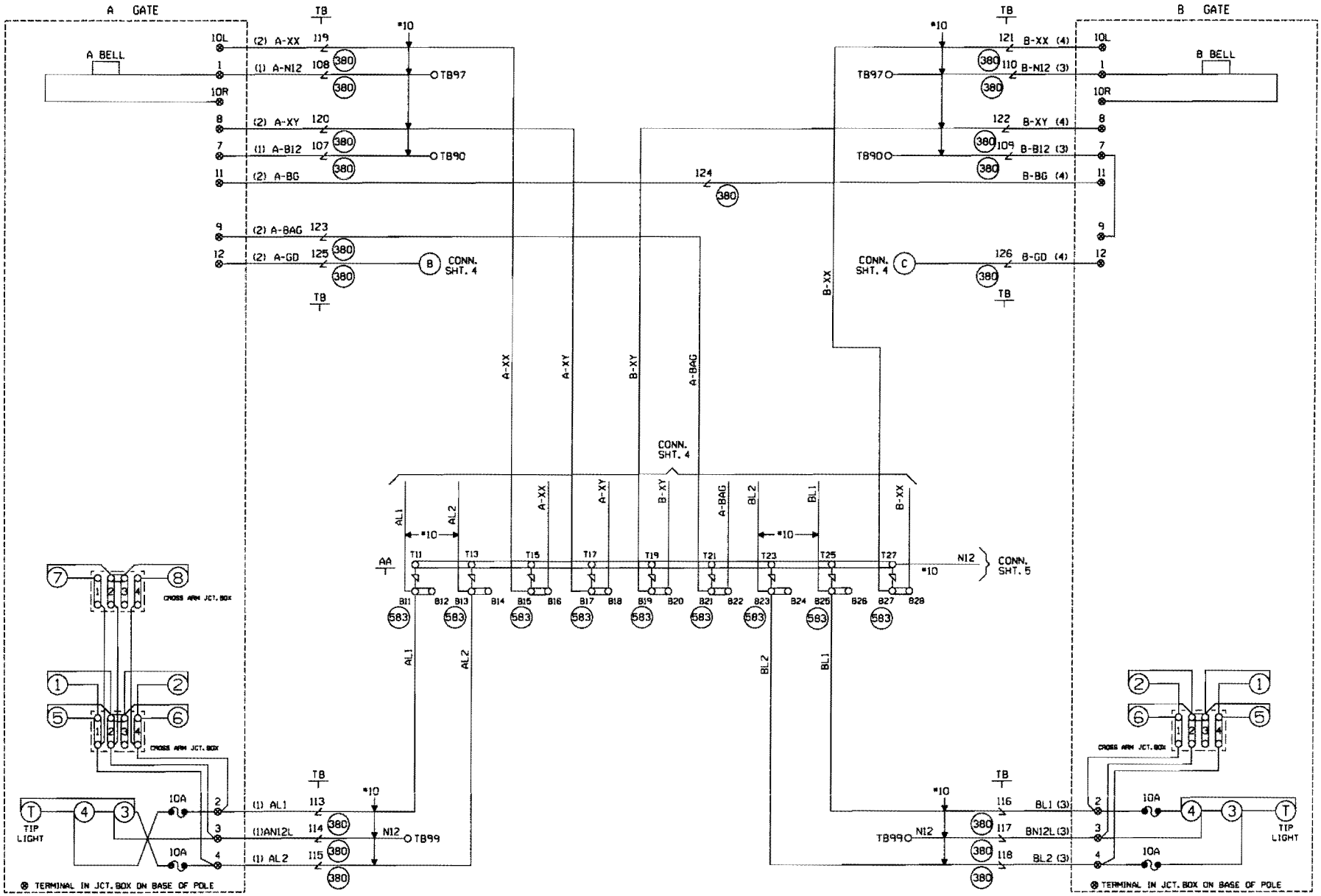

CABLE TABULATION

CABLE NO. 1 5C. NO.6 U.G.B.T.
CABLE NO. 2 7C. NO.14 U.G.B.T.
CABLE NO. 3 5C. NO.6 U.G.B.T.
CABLE NO. 4 7C. NO.14 U.G.B.T.

NEW SHEET

Designed 9/2/08 INSTALL GATES AND A GCP 4000 IN A NEW BUNGALOW @ TR-227 MP. 197.55.	MODIFICATION LEVEL		UNION PACIFIC SIGNAL DESIGN	Date: 9-2-08	UNION PACIFIC RAILROAD	Sh.: 6
	D.A. LAST LEVEL CHECKED	DR		Des: WIT	SHELBYVILLE, ILLINOIS	OOT 167869V
	LAST LEVEL MOD THIS TYPICAL	DR		Chk: JMM	TR 227	MP: 197.55
	LAST LEVEL BY DESIGNER	DR		AFE: 88290	SALEM SUBDIVISION	ID: 030119755.6X
	CHANGED FROM TYPICAL?	Y			Office of Sr AVP Engineering - Signal/TCO Omaha, Nebraska	

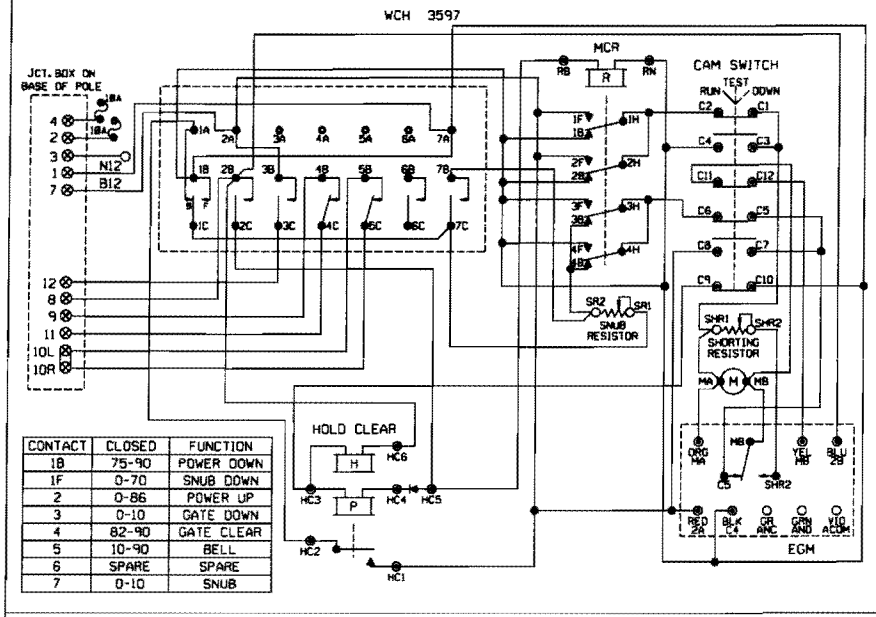

CONTACT	CLOSED	FUNCTION
1B	75-90	POWER DOWN
1F	0-70	SNUB DOWN
2	0-86	POWER UP
3	0-10	GATE DOWN
4	82-90	GATE CLEAR
5	10-90	BELL
6	SPARE	SPARE
7	0-10	SNUB

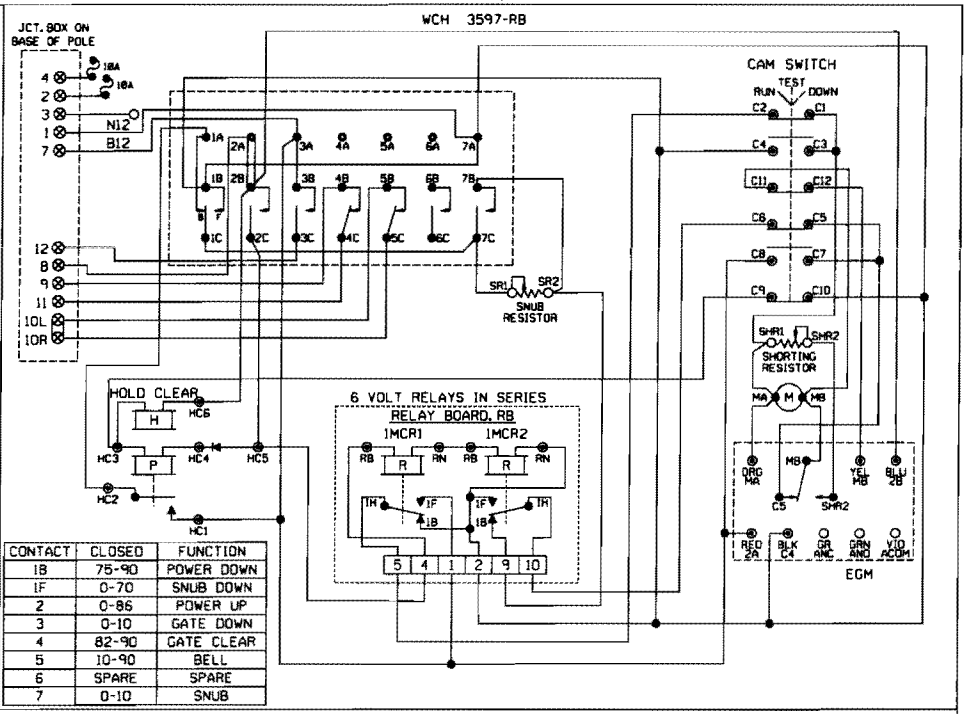

CONTACT	CLOSED	FUNCTION
1B	75-90	POWER DOWN
1F	0-70	SNUB DOWN
2	0-86	POWER UP
3	0-10	GATE DOWN
4	82-90	GATE CLEAR
5	10-90	BELL
6	SPARE	SPARE
7	0-10	SNUB

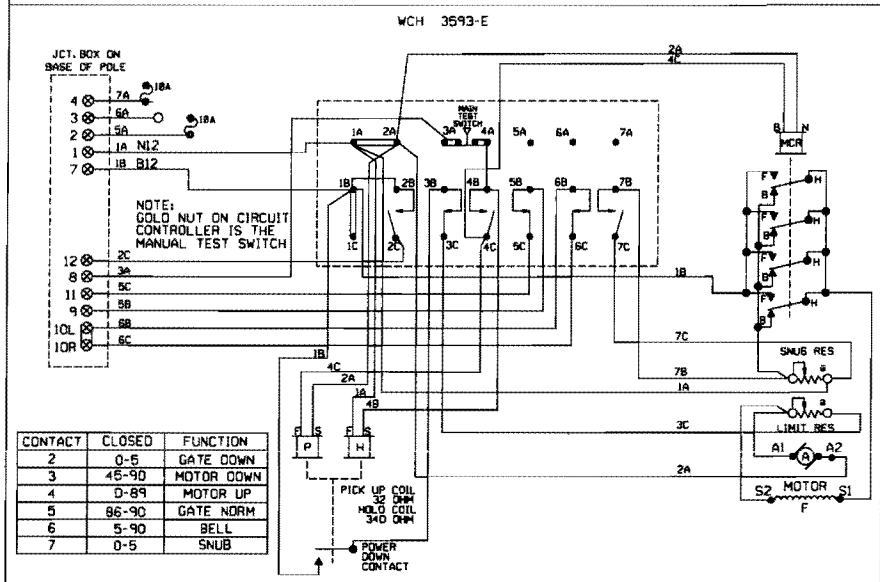

CONTACT	CLOSED	FUNCTION
2	0-5	GATE DOWN
3	45-90	MOTOR DOWN
4	0-89	MOTOR UP
5	86-90	GATE NORM
6	5-90	BELL
7	0-5	SNUB

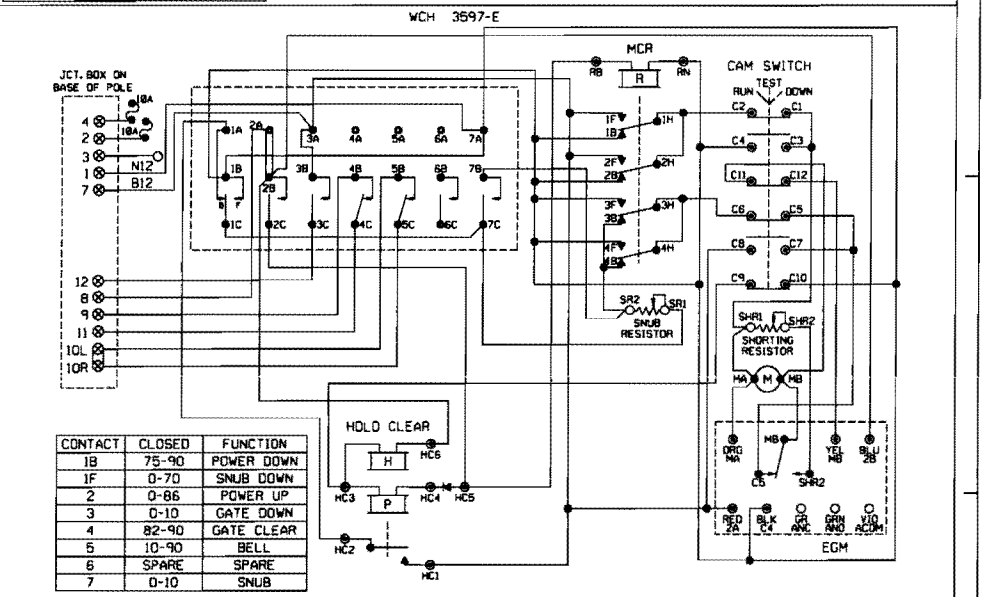

CONTACT	CLOSED	FUNCTION
1B	75-90	POWER DOWN
1F	0-70	SNUB DOWN
2	0-86	POWER UP
3	0-10	GATE DOWN
4	82-90	GATE CLEAR
5	10-90	BELL
6	SPARE	SPARE
7	0-10	SNUB

SHOW TYPE MECH. INSTALLED

ALL MECHANISMS SHOWN IN THE CLEAR POSITION

JCT. BOX ON BASE POLE

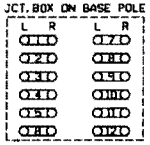

NEW SHEET

Revised 9/2/08 INSTALL DATES AND A DCP 4000 IN A NEW BUNGALOW @ TR-227 M.P. 197.55.	MODIFICATION LEVEL		
	O. A. LAST LEVEL CHECKED	DR	
	LAST LEVEL MOD THIS TYPICAL	DR	
	LAST LEVEL BY DESIGNER	DR	
	CHANGED FROM TYPICAL?	N	

UNION PACIFIC — SAFETY QUALITY PRODUCTIVITY — SIGNAL DESIGN

Date: 9-2-08
Dsnr: WIT
Chk: JMM
AFE: 88290

UNION PACIFIC RAILROAD
SHELBYVILLE, ILLINOIS
TR 227
SALEM SUBDIVISION
Office of Sr. AVP Engineering - Signal/TCO Omaha, Nebraska

Sht: 7
DOT 167869V
MP: 197.55
ID: 030119755.7X

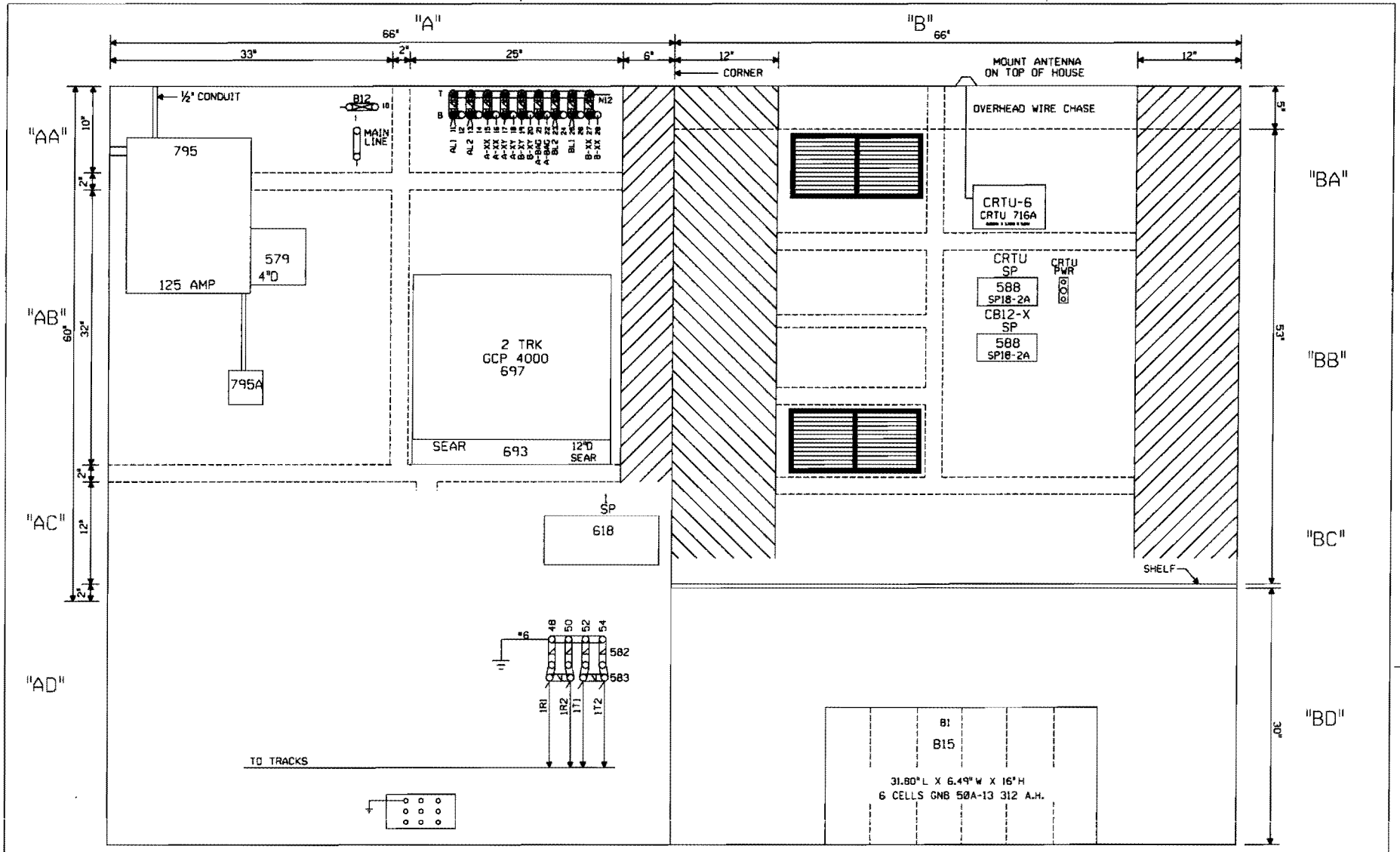

NOTE: ALL DIMENSIONS SHOWN ARE APPROXIMATE.

0 1 2 3 4 FEET

SCALE: 1.5 INCHES = 1 FOOT

NEW SHEET

Designed: 9/2/08 INSTALL GATES AND A GCP 4000 IN A NEW BUNGALOW @ TR-227 M.P. 197.55.	MODIFICATION LEVEL		UNION PACIFIC SIGNAL DESIGN	Date: 9-2-08	UNION PACIFIC RAILROAD	Sh.: 8
	D.A. LAST LEVEL CHECKED	DR		Des: WIT	SHELBYVILLE, ILLINOIS	DOT 167869V
	LAST LEVEL MOD THIS TYPICAL	DR		Chk: JMM	TR 227	MP: 197.55
	LAST LEVEL BY DESIGNER	DR		AFE: 88290	SALEM SUBDIVISION	ID: 030119755.8X
Rev: WO#: 88290	CHANGED FROM TYPICAL?	Y			Office of Sr AVP Engineering - Signal/TCO Omaha, Nebraska	

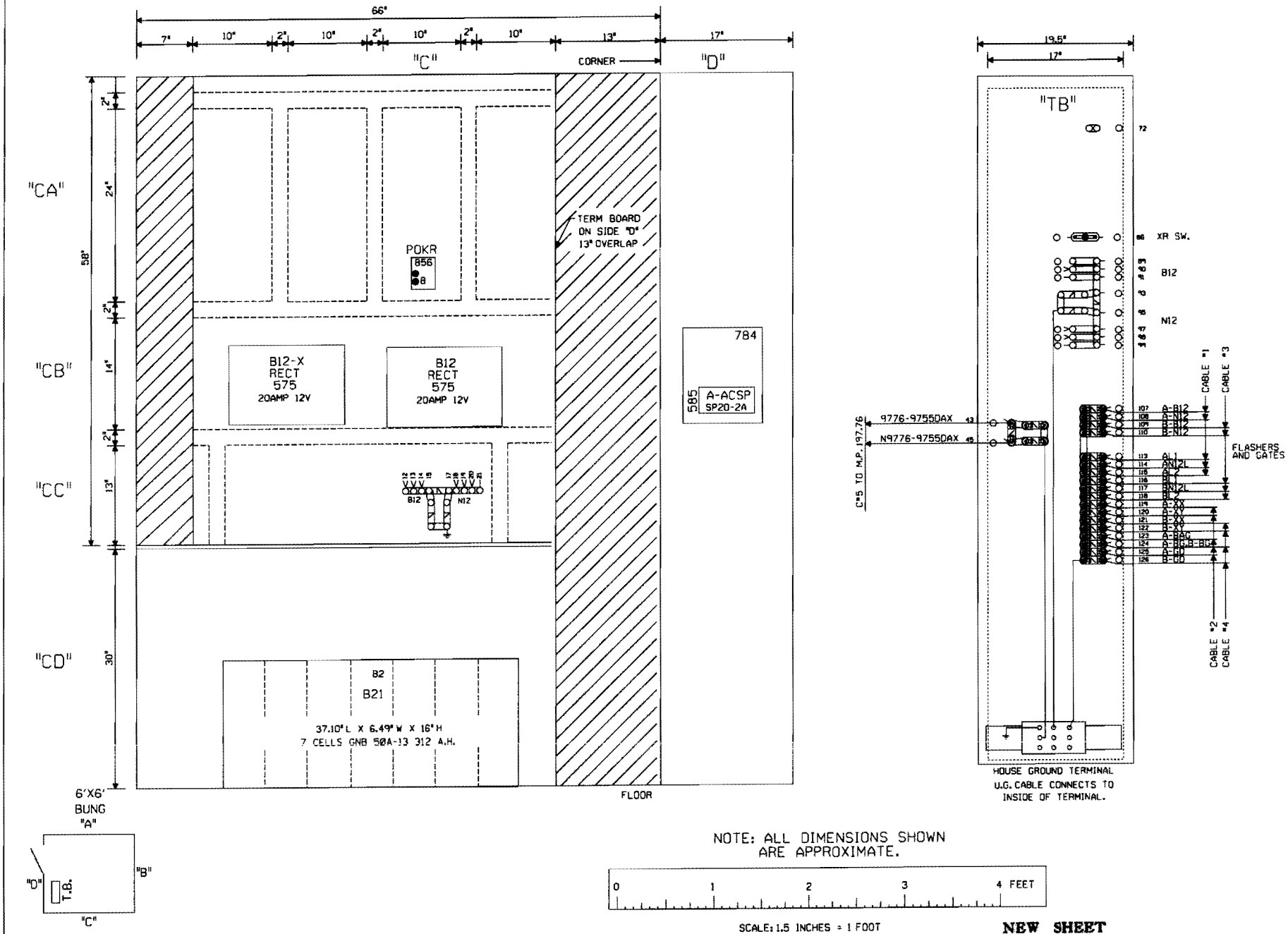

NEW SHEET

Designed 9/2/08 INSTALL GATES AND A GCP 4000 IN A NEW BUNGALOW @ TR-227 M.P. 197.55.	MODIFICATION LEVEL		UNION PACIFIC SIGNAL DESIGN	Date: 9-2-08	UNION PACIFIC RAILROAD	Sh.: 9
	O.A. LAST LEVEL CHECKED	DR		Des: WIT	SHELBYVILLE, ILLINOIS	DOT 167869V
	LAST LEVEL MOD THIS TYPICAL	DR		Chk: JMM	TR 227	MP: 197.55
	LAST LEVEL BY DESIGNER	DR		AFE: 88290	SALEM SUBDIVISION	ID: 030119755.9X
Rev: WO: 88290 JMM	CHANGED FROM TYPICAL?	Y			Office of Sr. AVP Engineering - Signal/TCO Omaha, Nebraska	
/WIT/JJF	by 02.01.09 4K DEC.9					

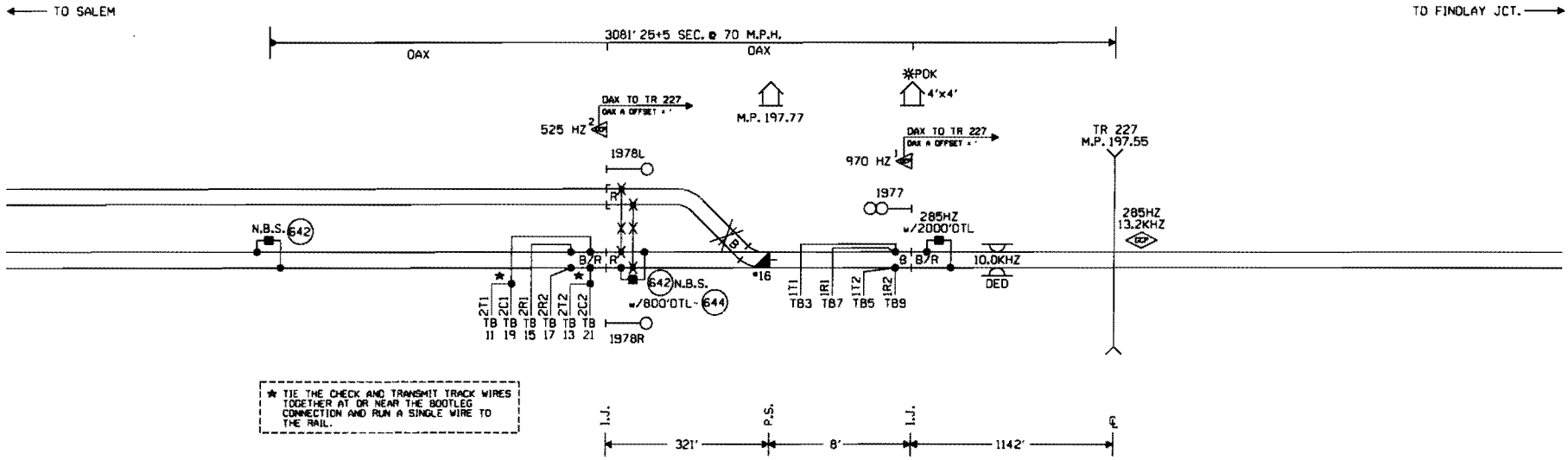

CONNECTS TO 030119777.1S

CONNECTS TO 030119755.1X

CONSTRUCTION NOTES:

X = REMOVE

RECEIVED

OCT 27 2009

Illinois Commerce Commission
RAIL SAFETY SECTION

NOTES:

⊗ = TWISTED WIRES
ALL TRACK WIRES 2C. #6
INSULATED 1 TWIST PER FT.

TRANSMITTER AND RECEIVER LEADS TO BE SEPARATED BY AT LEAST 12" IN TRENCH. LENGTHS SHOULD NOT EXCEED MANUFACTURES RECOMMENDATION.

ALL BUNGALOW WIRING TO BE #16 AWG FLEX UNLESS OTHERWISE SPECIFIED EXCEPT ALL GROUND WIRE TO BE #6 AWG FLEX OR LARGER.

REFER TO UP STANDARD DWG. FOR BUNGALOW GROUNDING.

PORTABLE GENERATOR EXTENSION CORD FOR 240V TO 240V IS PROVIDED AS WELL AS A 120V TO 240V ADAPTER.

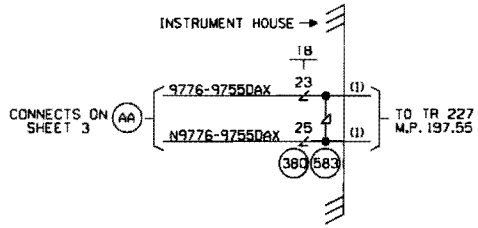

W(S) ←—○—→ E(N)

CABLE TABULATION

CABLE #1 7C #14 U.G.B.T. HOUSE TO M.P. 197.55

NEW SHEET

Designed 9/2/08 INSTALL GATES AND A GCP 4000 IN A NEW BUNGALOW @ TR-227 M.P. 197.55.	MODIFICATION LEVEL		UNION PACIFIC SIGNAL DESIGN	Date: 9-2-08	UNION PACIFIC RAILROAD	Sh: 1
	D.A. LAST LEVEL CHECKED	DR		Des: WIT	SHELBYVILLE, ILLINOIS	DOT 000000R
	LAST LEVEL MOD THIS TYPICAL	DR		Chk: B.C.H.	REMOTE LOCATION	MP: 197.76
	LAST LEVEL BY DESIGNER	DR		AFE: 88290	SALEM SUBDIVISION	ID: 030119776.1X
	CHANGED FROM TYPICAL?	Y			Office of Sr AVP Engineering - Signal/TCO Omaha, Nebraska	

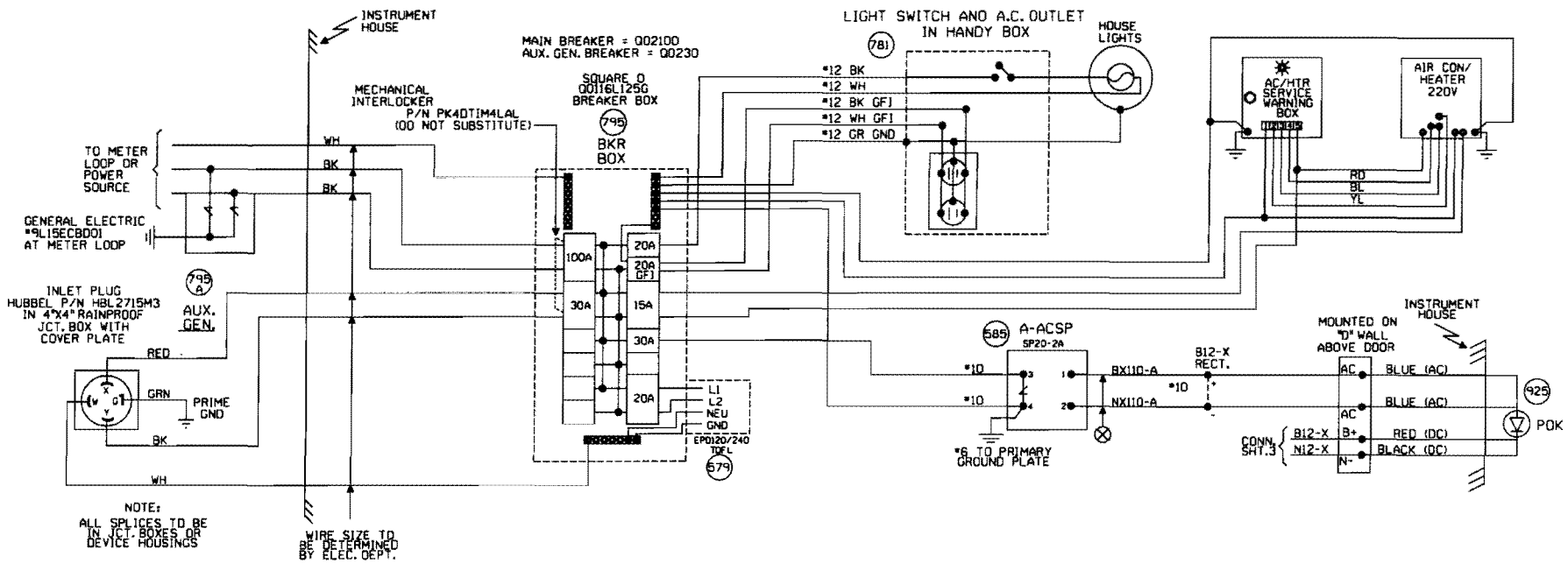

NEW SHEET

Drawing 4/2/08
INSTALL GATES AND A DCP 4000 IN A NEW BUNGALOW @ TR-227 MLP. 197.55.

MODIFICATION LEVEL	
O.A. LAST LEVEL CHECKED	DR
LAST LEVEL MOD THIS TYPICAL	DR
LAST LEVEL BY DESIGNER	DR
CHANGED FROM TYPICAL?	Y

Rev. 88290 /JMM /WIT/JJF
Rev. 02.01.09 JK SEARC.2

UNION PACIFIC
QUALITY PRODUCTIVITY SAFETY
SIGNAL DESIGN

Date: 9-2-08
Des: WIT
Chk: JMM
AFE: 88290

UNION PACIFIC RAILROAD

SHELBYVILLE, ILLINOIS
REMOTE LOCATION
SALEM SUBDIVISION

Office of Sr AVP Engineering - Signal/TCO Omaha, Nebraska

Sh: 2
DOT 000000R
MP: 197.76
ID: D30119776.2X

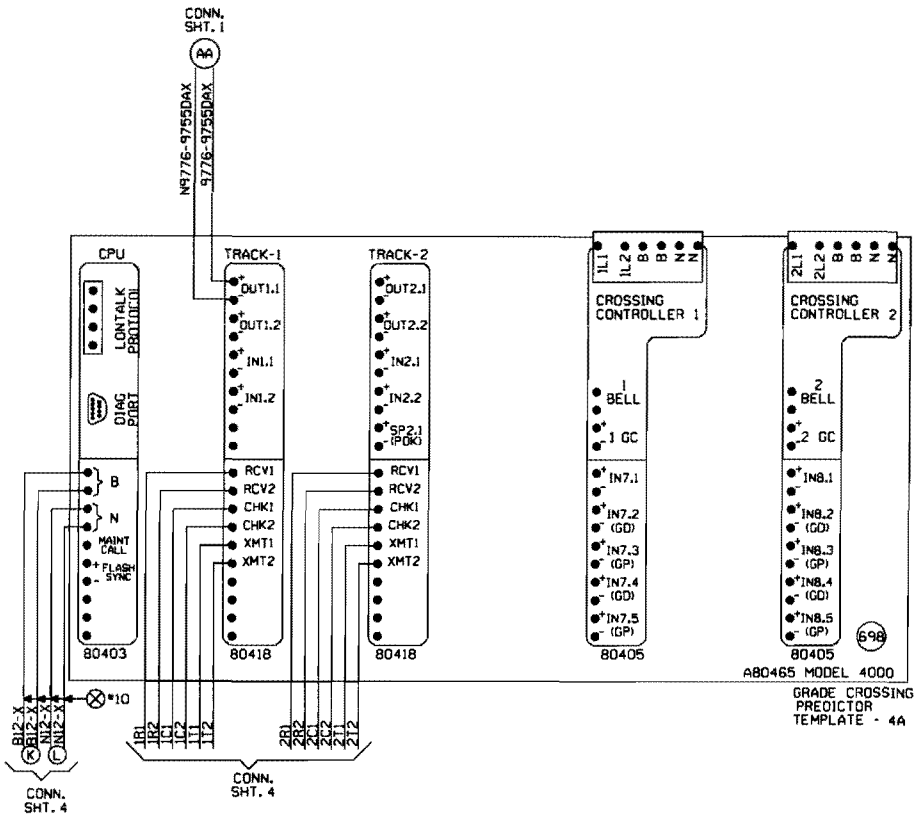

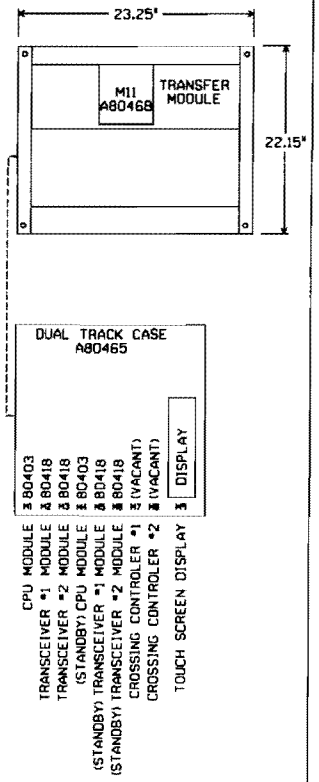

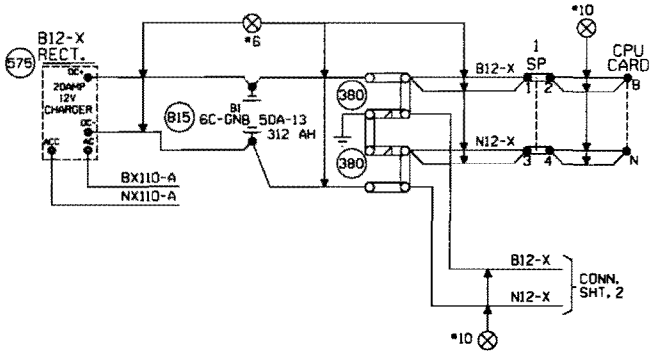

"Mf" FREQUENCY (HZ)	MAXIMUM TRANSMIT WIRE LENGTH (FEET)
86	100
114	125
156	150
211	200
285-970	250

NOTE:
EACH TRANSMITTER TO RAIL WIRE FROM XMT1 AND XMT2 MUST NOT EXCEED THE MAXIMUM LENGTH SPECIFIED IN THE TABLE SHOWN. THE RECEIVER WIRE LENGTH IS NOT CRITICAL. DOES NOT APPLY TO 6 TRACK WIRE APPLICATION.

NEW SHEET

Revised 4/2/08 INSTALL GATES AND A GCP MODE IN A NEW BUNGALOW @ TR-237 M.P. 197.58.

MODIFICATION LEVEL	
D.A. LAST LEVEL CHECKED	DR
LAST LEVEL MOD THIS TYPICAL	DR
LAST LEVEL BY DESIGNER	DR
CHANGED FROM TYPICAL?	Y

Rev'd: WO: 88290 JMM
Ills: /WIT/JJF
ev.02.01.09 4K 21X9F.3

UNION PACIFIC
SAFETY PRODUCTIVITY QUALITY
SIGNAL DESIGN

Date: 9-2-08
Des: WIT
Chk: JMM
AFE: 88290

UNION PACIFIC RAILROAD
SHELBYVILLE, ILLINOIS
REMOTE LOCATION
SALEM SUBDIVISION
Office of Sr AVP Engineering - Signal/TCO Omaha, Nebraska

Sh: 3
DOT 000000R
MP: 197.76
IO: 030119776.3X

Minimum Program Steps Report

Location and SIN

DOT Number: 000000R
Milepost Number: 197.76
Site Name: Shelbyville, IL

SIN: 762010010016 *

* Parameter is part of office check number calculation.

MCF and Template Selection

MCF Name: GCP-T6X-02-1.mcf
MCF Revision: 021
MCFCRC: 6076E435

Template = 4A:6 Remotes *

* Parameter is part of office check number calculation.

Minimum Program Steps

TEMPLATE: module configuration
Track 2/RIO 1 Slot = Track *

TEMPLATE: track 1-Remote Dax
Track 1 : GCP Frequency = 970 Hz
Track 1 : Approach Distance = 329 ft
Track 1 : Dax A Warning Time = 25 sec
Track 1 : Dax A Offset Distance = 1080 ft
Track 1 : GCP Transmit Level = Medium (Set in Field)

TEMPLATE: track 2-Remote Dax
Track 2 : GCP Frequency = 525 Hz
Track 2 : Approach Distance = 1672 ft
Track 2 : Dax A Warning Time = 25 sec
Track 2 : Dax A Offset Distance = 1409 ft
Track 2 : GCP Transmit Level = Medium (Set in Field)

TEMPLATE: OP assignment 1
OUT 1.1 = AND 1 XR *

* Parameter is part of office check number calculation.

Check Numbers

Office Check No. (DT 4.6.0): 4D6201A2
Office Check Number: 4D6201A2
Config. Check Number: 7C412536
(Based on MCF Revision 021)

Parameters not part of office check number calculation:

Track 1 : GCP Frequency = 970 Hz
Track 1 : Approach Distance = 329 ft
Track 1 : Dax A Warning Time = 25 sec
Track 1 : Dax A Offset Distance = 1080 ft
Track 1 : GCP Transmit Level = Medium (Set in Field)
Track 2 : GCP Frequency = 525 Hz
Track 2 : Approach Distance = 1672 ft
Track 2 : Dax A Warning Time = 25 sec
Track 2 : Dax A Offset Distance = 1409 ft
Track 2 : GCP Transmit Level = Medium (Set in Field)

Comments

<none>

Configuration Package File

Filename: C30119776_000000R.pac
Path: C:\PAC File\
Date/Time: 5/13/2009 14:14:08
DT Version: 4.8.5

NEW SHEET

				INSTALL GATES AND A DCP 4000 IN A NEW BUNGALOW @ TR-227 M.P. 197.55L	**NOTE: Actual OFFSET and ISLAND distances must be verified by field personnel.**	UNION PACIFIC SAFETY SIGNAL DESIGN	Date: 9-2-08	**UNION PACIFIC RAILROAD**	Sht: 3A
							Des: WIT	SHELBYVILLE, ILLINOIS	DOT 000000R
							Chk: JHM	REMOTE LOCATION	MP: 197.76
							AFE: 88290	SALEM SUBDIVISION	ID: 030119776.3AX
								Office of Sr. AVP Engineering - Signal/TCO Omaha, Nebraska	

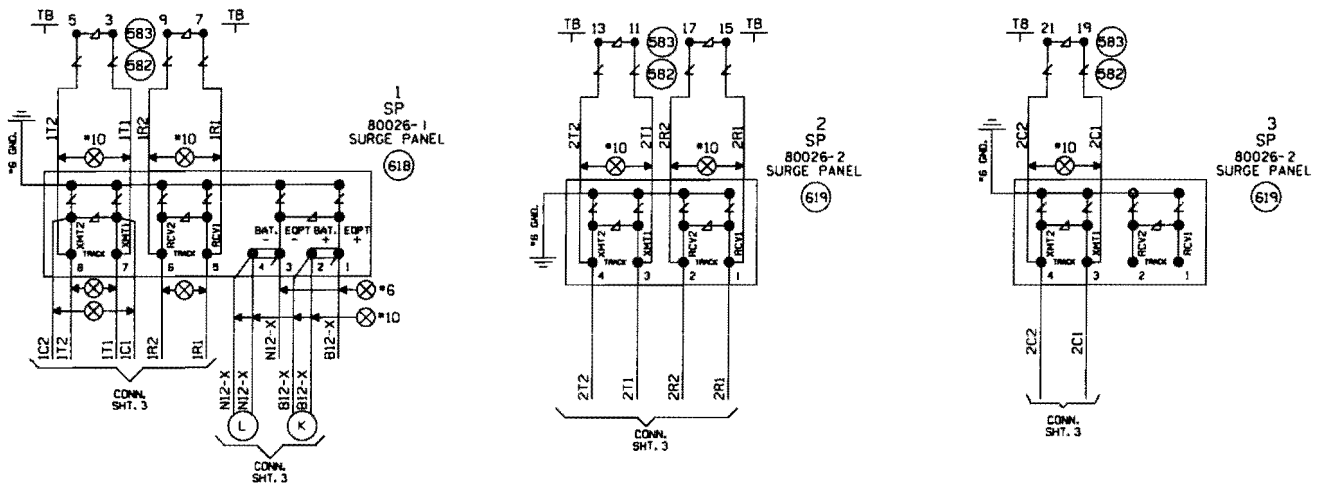

NEW SHEET

Designed 9/2/08 INSTALL DATES AND A GCP 4000 IN A NEW BUNGALOW @ TR-227 M.P. 197.58. Rev: WO: 88290 Is: JMM / WIT/JJF	MODIFICATION LEVEL		UNION PACIFIC SAFETY SIGNAL DESIGN	Date: 9-2-08	UNION PACIFIC RAILROAD	Sh.: 4
	D. A. LAST LEVEL CHECKED	DR		Des: WIT	SHELBYVILLE, ILLINOIS	DOT 000000R
	LAST LEVEL MOD THIS TYPICAL	DR		Chk: JMM	REMOTE LOCATION	MP: 197.76
	LAST LEVEL BY DESIGNER	DR		AFE: 88290	SALEM SUBDIVISION	IO: 030119776.4X
	CHANGED FROM TYPICAL?	Y			Office of Sr AVP Engineering - Signal/TCO Omaha, Nebraska	
	MV 02.01.09 4X REMOTE.4					

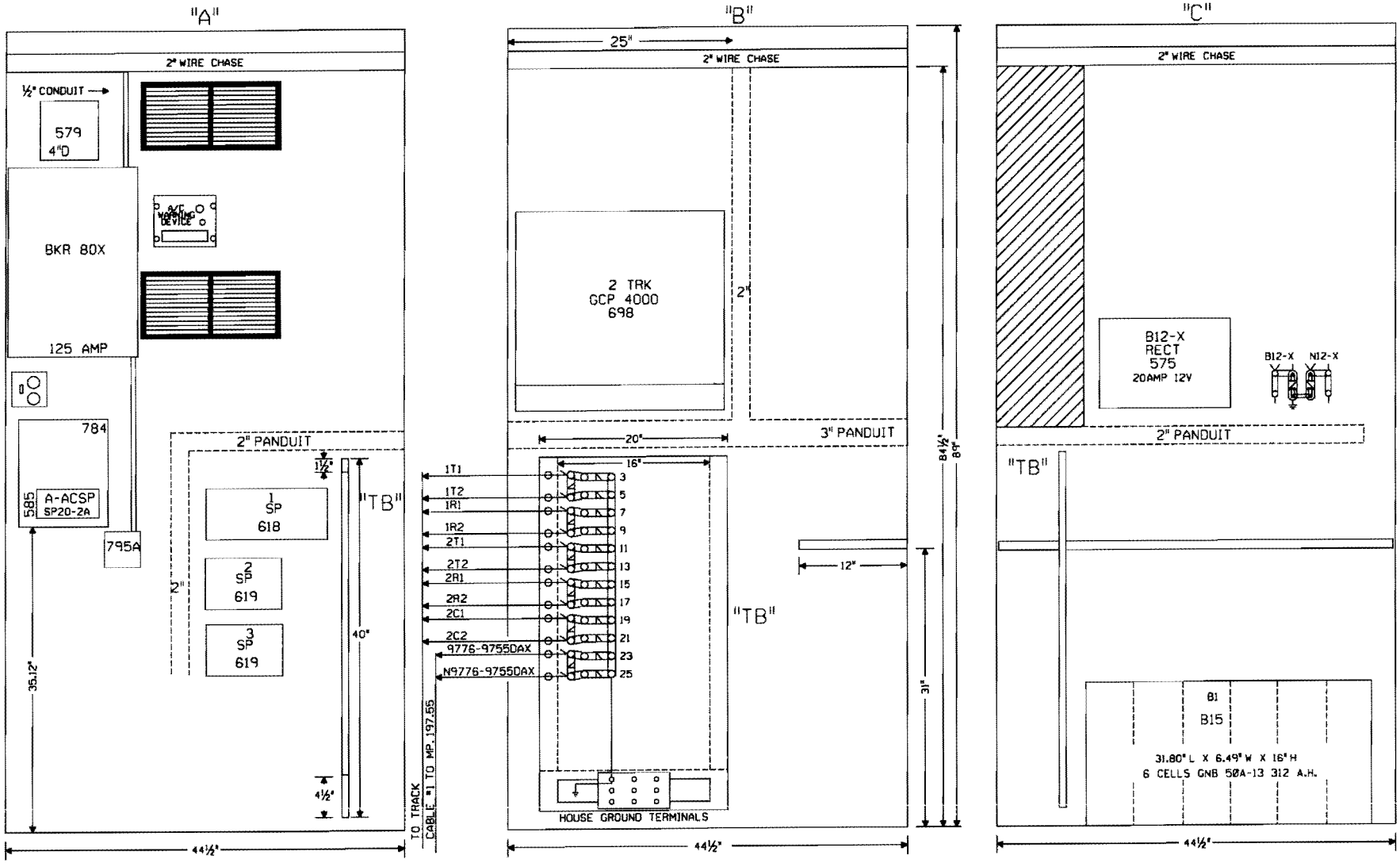

NOTE: ALL DIMENSIONS SHOWN ARE APPROXIMATE.

0 1 2 3 4 FEET

SCALE: 1.5 INCHES = 1 FOOT

NEW SHEET

Designed 4/2/08	INSTALL GATES AND A GCP 4000 IN A NEW BUNGALOW @ TB-227 M.P. 197.55.
Rev'n Ins	WO'n 88290 ADBS /WIT/JJP

MODIFICATION LEVEL	
D. A. LAST LEVEL CHECKED	DR
LAST LEVEL MOD THIS TYPICAL	DR
LAST LEVEL BY DESIGNER	DR
CHANGED FROM TYPICAL?	Y

UNION PACIFIC — SAFETY — SIGNAL DESIGN

Date:	9-2-08
Des:	WIT
Chk:	B.C.H.
AFE:	88290

UNION PACIFIC RAILROAD

SHELBYVILLE, ILLINOIS
REMOTE LOCATION
SALEM SUBDIVISION

Office of Sr AVP Engineering - Signal/TCO Omaha, Nebraska

Sht	5
DOT	000000R
MP:	197.76
ID:	030119776.5X