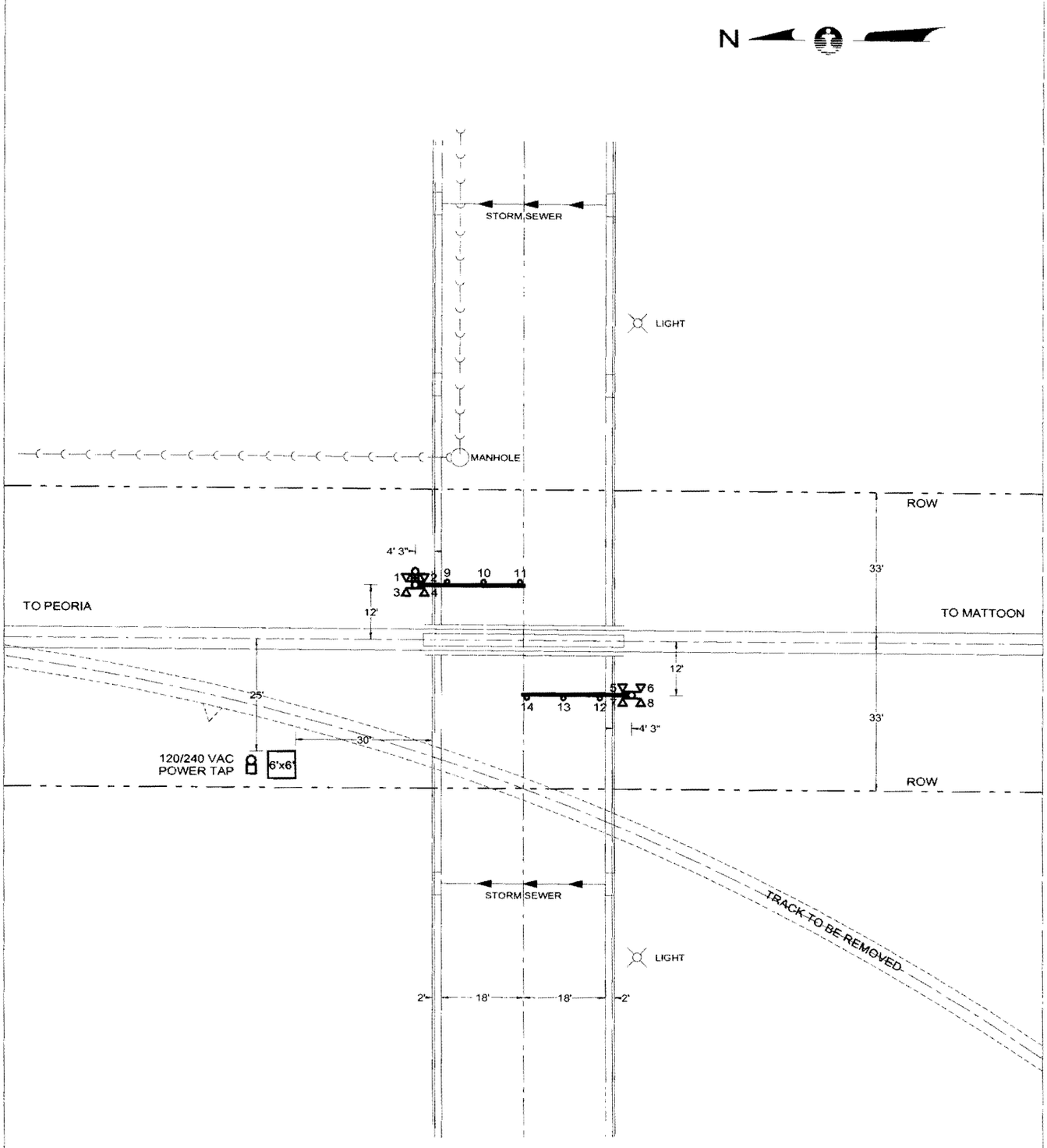

PROPOSED
NOV 4, 2008

RECEIVED
OCT 14 2009
Illinois Commerce Commission
RAIL SAFETY SECTION

NOTE :
BUNGALOW LOCATION SUBJECT TO CHANGE

QUADRANT	NE	SW
STANDARD AFLS	LED	LED
CANTILEVER, FT.	-	-
GATE, FT.	24	24
ADDED LIGHTS	-	-
BARRICADE	-	-
MULTI-TK SIGN	-	-
BELL	X	-
REVISIONS		

CN

SIGNALS & COMMUNICATIONS, ENGINEERING DEPARTMENT

CITY & STATE: PEKIN, IL	SD 1047 X
CROSSING: HANNA DRIVE	DATE: NOV 4, 2008
IC - 10.80-B	DOT - NEW CROSSING
MIDWEST DIVISION	PEORIA SUBDIVISION
IN SERVICE	SCALE: 1"=30' / DRAWN BY: AVS

E:\DWG\PEO\01080X.CAD

SD 1047 - MP 10 TO 11

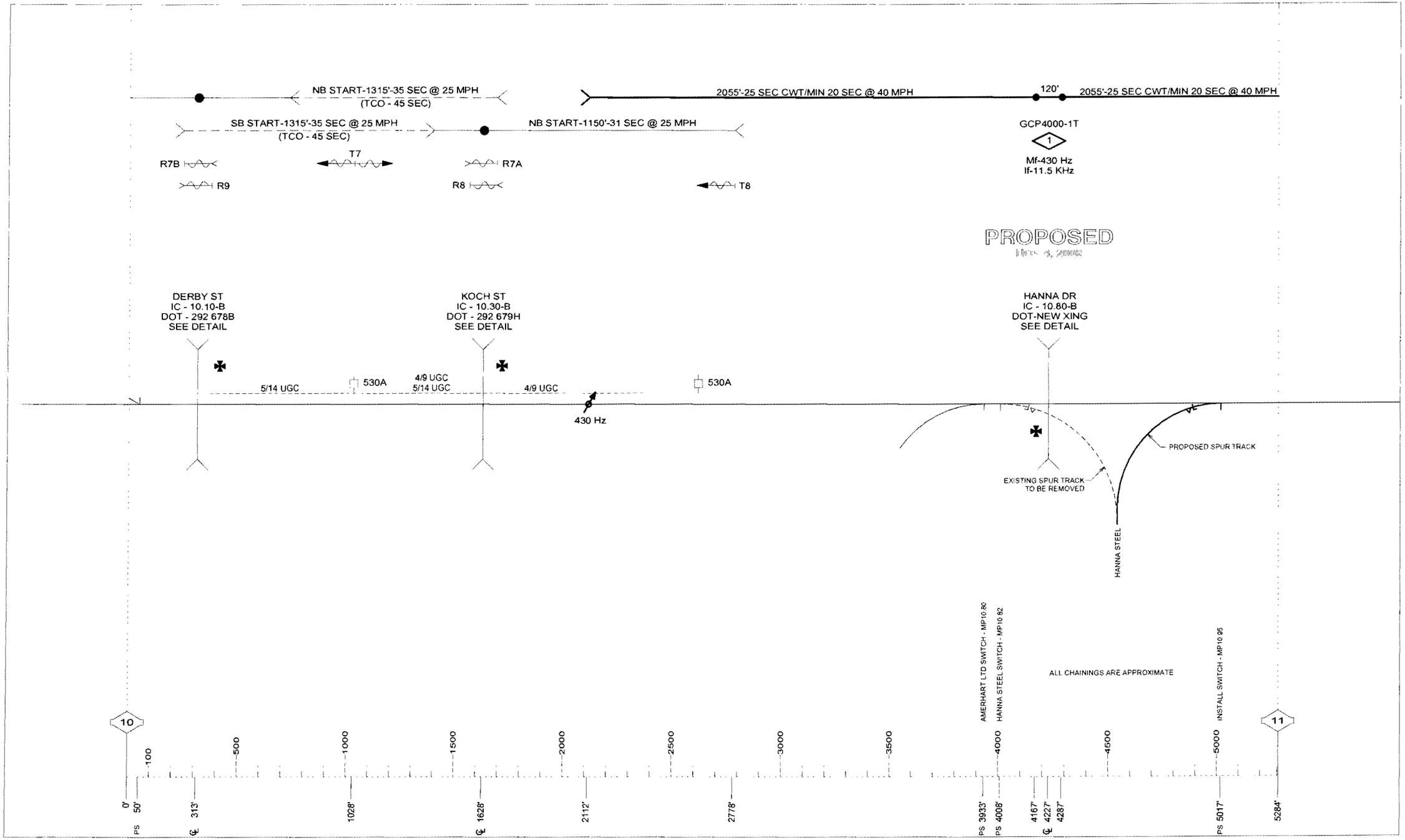

SPEED RESTRICTION - MP 9.7 TO MP 11 - 25 MPH

DRAWING SCALE 1" = 500'

SD 1047 - MP 11 TO 12

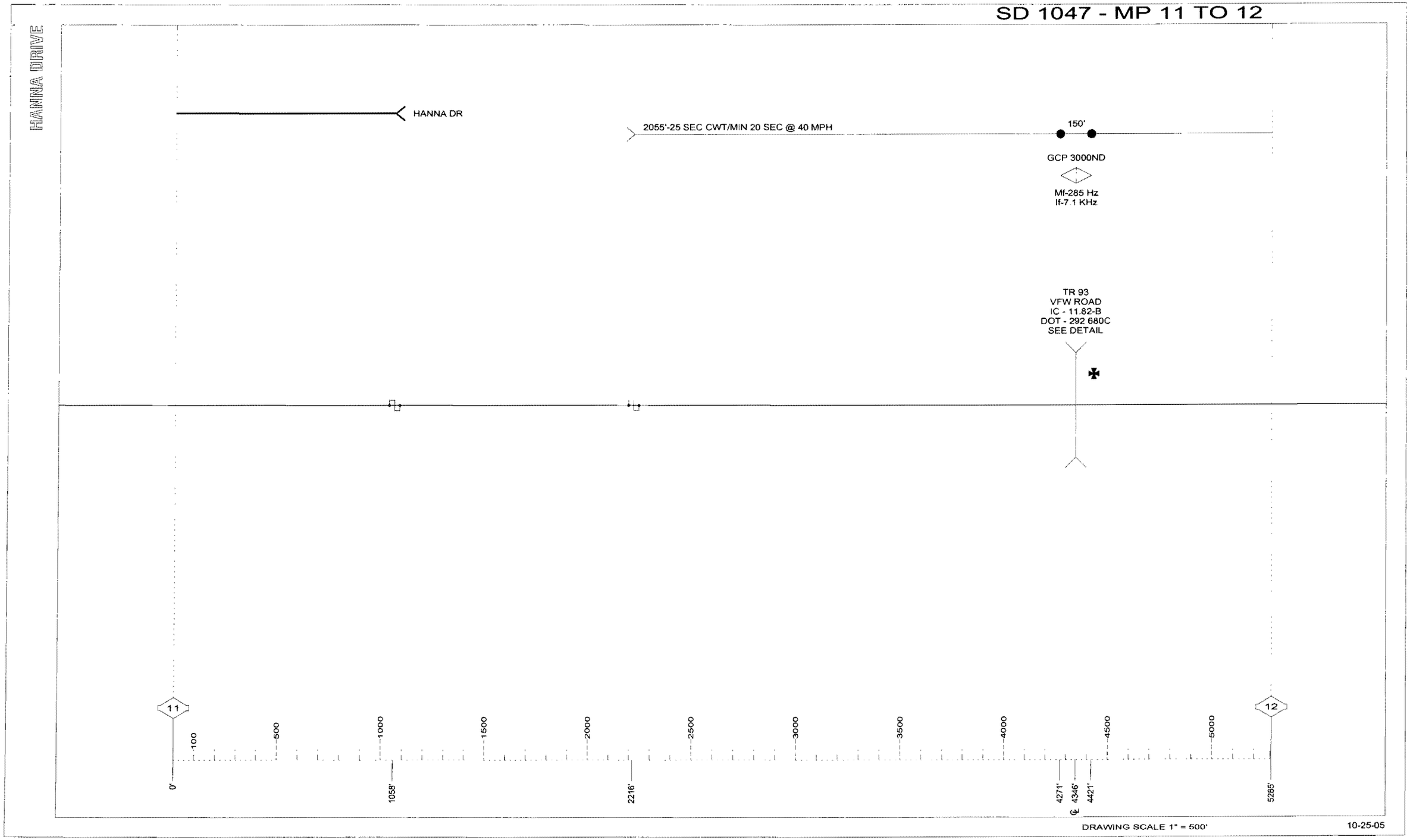

WATERMARK

PEO-010.80-01.dgn
06-OCT-2009

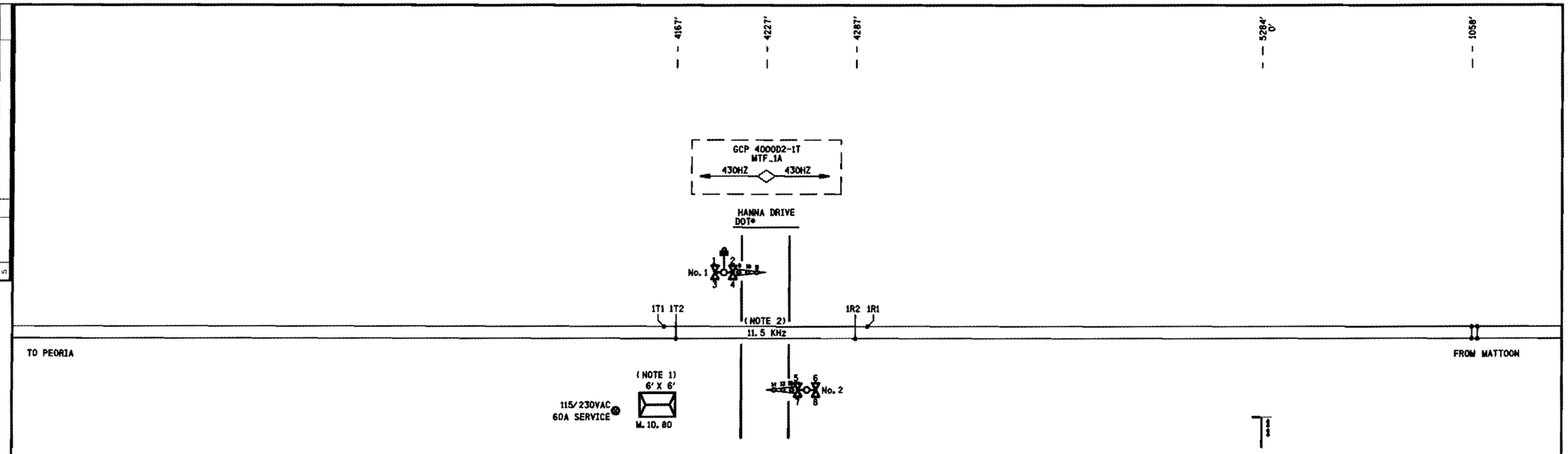

NO.	DATE	BY	DESCRIPTION	APP. BY
1				
2				
3				
4				
5				

REVISIONS

SAFETRAN SYSTEMS CORPORATION		
DES.: KLT	DATE: 09/15/09	JOB NO.: PTCA10194
CKD.: MKN	ISSUE DATE:	EST. NO.:
DRN.: KLT	PLAN NO.:	SHEET 1 OF 15
P TIME: 10:24	P DATE: 06-OCT-2009	CAD ID.: PEO-010.80-01

PROPOSED
DES. No. _____
RED-IN YELLOW-OUT
AS INSTALLED
DATE _____
BY _____

NOTES:
1) BUNGALOW TO BE INSTALLED WITH DOORS FACING TRACK.
2) ISLAND DISTANCE MINIMUM 120 FEET

6' X 6' BUNGALOW

PROPOSED D	M	Y	REVISIONS	D	C	COMPLETED D	M	Y	C

REGION SOUTHERN
SUB. PEORIA 362
SIGNALS AND COMMUNICATIONS HOMEWOOD
DES. KLT
15 SEPTEMBER 2009
CH. MKN
TRACK LAYOUT
HANNA DRIVE
PEKIN, IL
PEO-010.80-01

SAFETRAN SYSTEM CORP.
LOUISVILLE DIVISION, LOUISVILLE, KY

WATERMARK

NO.	DATE	BY	REVISIONS DESCRIPTION	APP. BY
1				
2				
3				
4				
5				

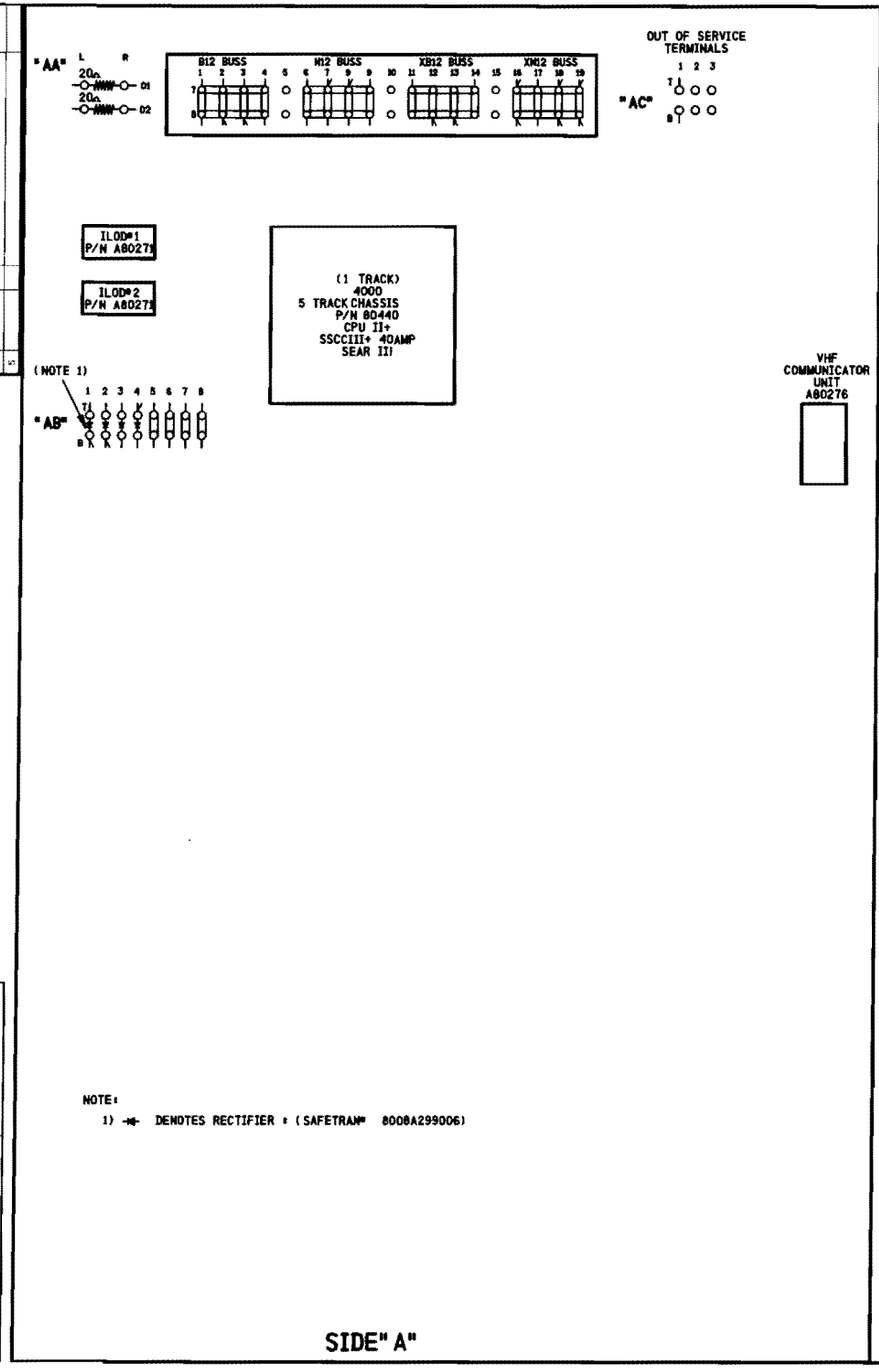

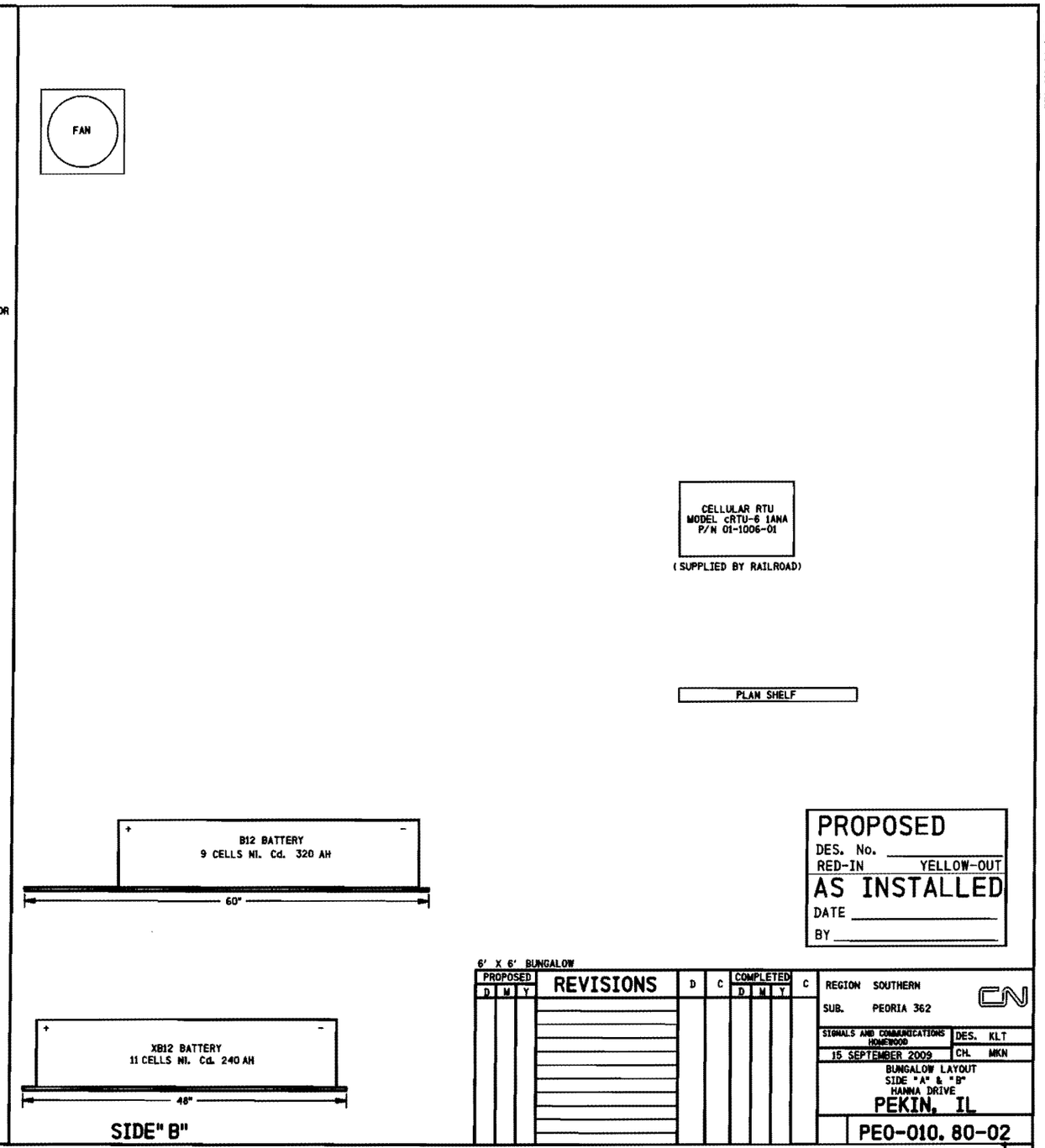

PEO-010. 80-02. dgn
06-OCT-2009

PROPOSED
DES. No. _____
RED-IN YELLOW-OUT
AS INSTALLED
DATE _____
BY _____

6' X 6' BUNGALOW

PROPOSED D	M	Y	REVISIONS	D	C	COMPLETED D	M	Y	C

REGION SOUTHERN
SUB. PEORIA 362
SIGNALS AND COMMUNICATIONS HOMEWOOD
DES. KLT
15 SEPTEMBER 2009
CH. MKN
BUNGALOW LAYOUT
SIDE "A" & "B"
HANNA DRIVE
PEKIN, IL
PEO-010. 80-02

SAFETRAN SYSTEM CORP.
LOUISVILLE DIVISION, LOUISVILLE, KY

SAFETRAN SYSTEMS CORPORATION

DES. : KLT	DATE: 09/15/09	JOB NO. : PICA10194	
CKD. : MKN	ISSUE DATE:	EST. NO. :	
DRN. : KLT	PLAN NO. :	SHEET 2 OF 15	
P TIME: 10:24	P DATE: 06-OCT-2009	CAD ID. : PEO-010. 80-02	

WATERMARK

NO.	DATE	BY	DESCRIPTION	APP. BY
1				
2				
3				
4				
5				

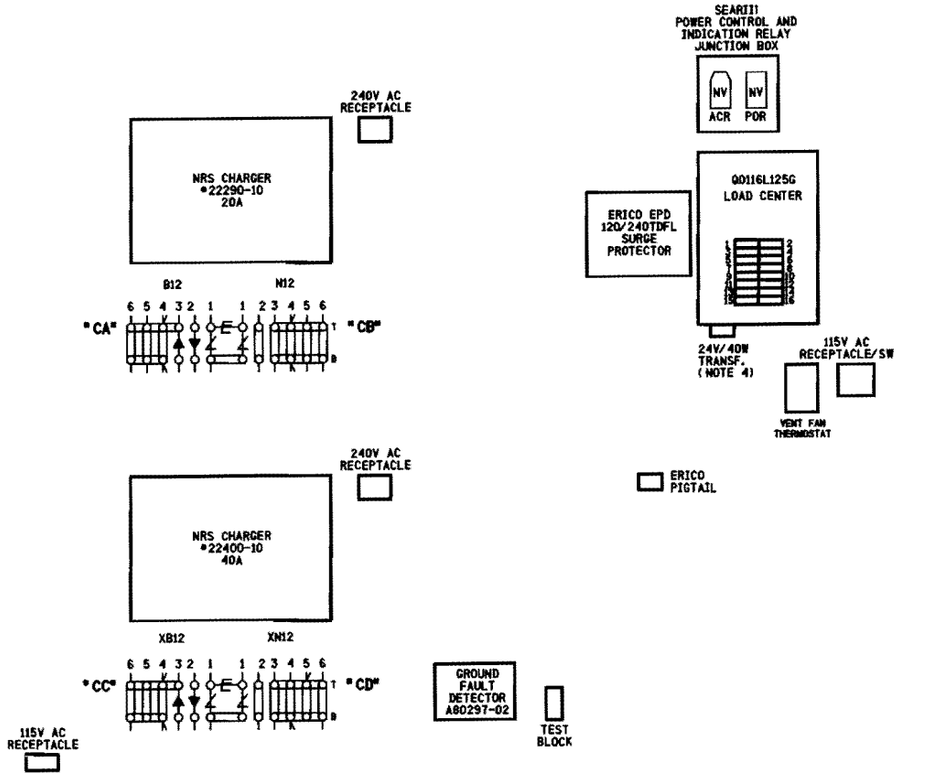

NOTES:

1) ⋿ DENOTES EQUALIZER TYPE:(SAFETRAN *022700-1X)
2) ⊸ DENOTES LIGHTNING ARRESTER TYPE:(SAFETRAN *022585-1X)
3) SURGE PROTECTION SHOULD BE BONDED TO BUNGALOW.
4) 24V-40W TRANSFORMER (CN STOCK *02-45-367)

SIDE "C"

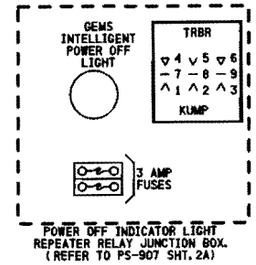

SIDE "D"
ABOVE ENTRY DOOR

PEO-010. 80-03. dgn
06-OCT-2009

SAFETRAN SYSTEMS CORPORATION		
DES.: KLT	DATE: 09/15/09	JOB NO.: FTCA10194
CKD.: MKN	ISSUE DATE:	EST. NO.:
DRN.: KLT	PLAN NO.:	SHEET 3 OF 15
P TIME: 10:24	P DATE: 06-OCT-2009	CAD ID.: PEO-010. 80-03

PROPOSED
DES. No. _____
RED-IN YELLOW-OUT
AS INSTALLED
DATE _____
BY _____

6' X 6' BUNGALOW

PROPOSED D	M	Y	REVISIONS	D	C	COMPLETED D	M	Y	C

REGION SOUTHERN
SUB. PEORIA 362
CN

SIGNALS AND COMMUNICATIONS HOMEWOOD | DES. KLT
15 SEPTEMBER 2009 | CH. MKN

BUNGALOW LAYOUT
SIDE "C" & OVER DOOR SIDE "D"
HANNA DRIVE
PEKIN, IL

PEO-010. 80-03

SAFETRAN SYSTEM CORP.
LOUISVILLE DIVISION, LOUISVILLE, KY

$WATERMARK

PEO-010. 80-04. dgn
06-OCT-2009

NO.	DATE	BY	REVISIONS DESCRIPTION	APP. BY
1				
2				
3				
4				
5				

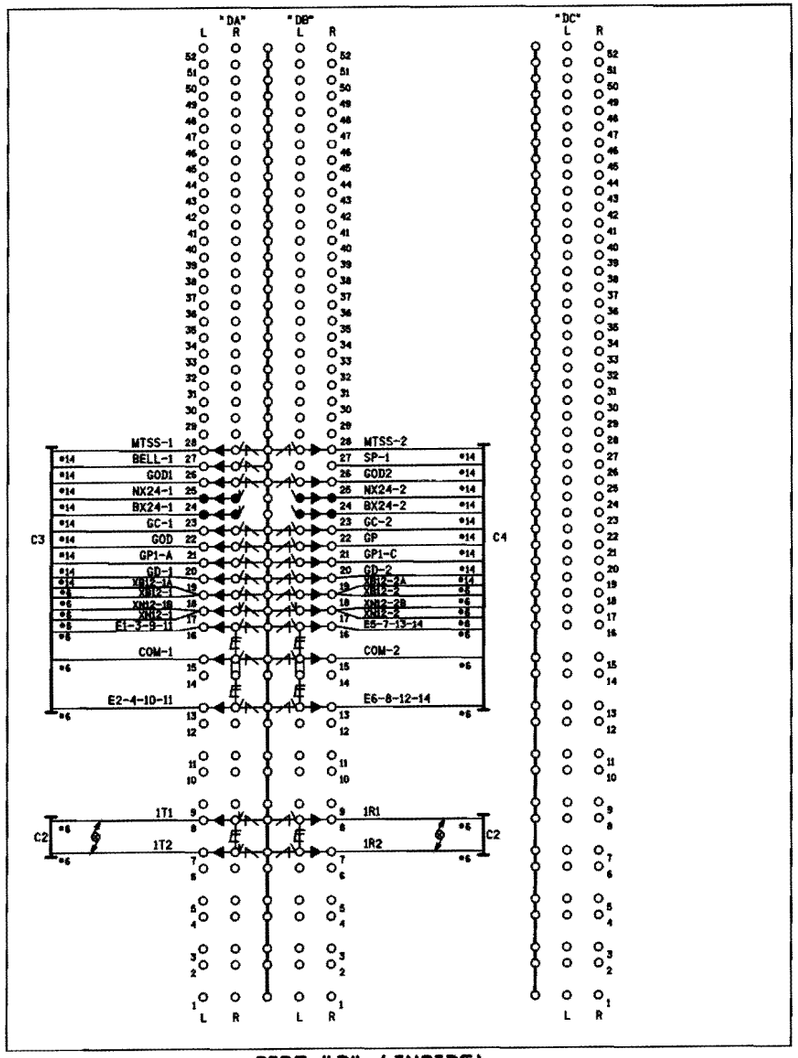

SIDE "D" (INSIDE)

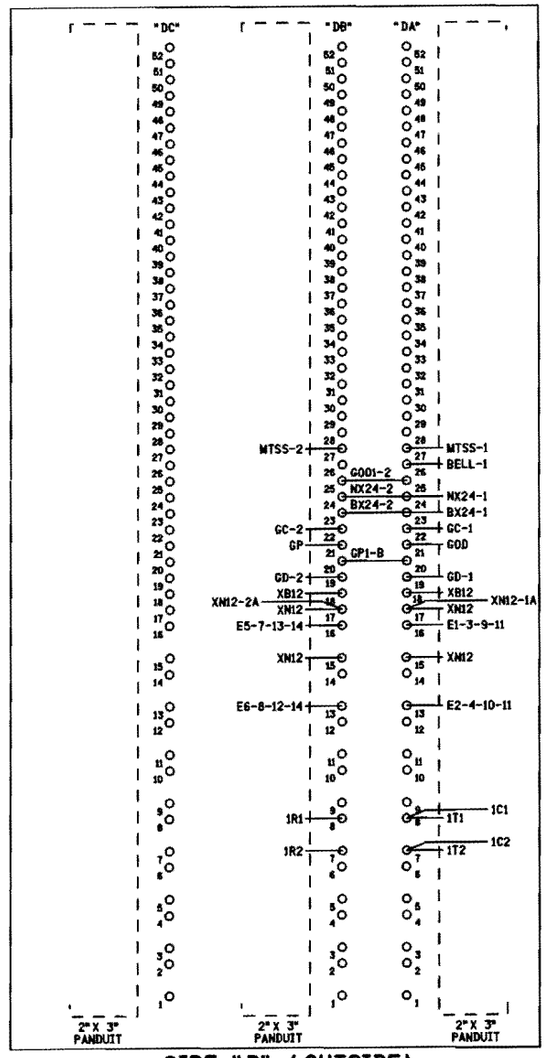

SIDE "D" (OUTSIDE)

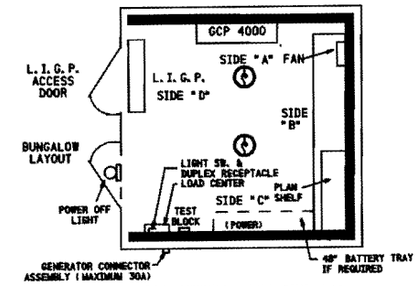

ROOF MOUNTED AC/HEATING UNIT

CABLE CONSIST:

C1-3C#6 TECK 90 U/G TO MAIN SERVICE
C2-(2)-2SC#6 TW. TO TRACK
C3-16C (7#6, 9#14) TO GATE (SIG.#1)
C4-16C (7#6, 9#14) TO GATE (SIG.#2)

NOTES:

1) DENOTES LIGHTNING ARRESTER TYPE:(SAFETRAN #022585-1X)
2) DENOTES EQUALIZER TYPE:(SAFETRAN #022700-1X)
3) DENOTES TWISTED PAIR.
4) ENSURE DOUBLE NUTTING OF ALL TERMINALS.
5) ● DENOTES INSULATED TERMINAL

PROPOSED
DES. No. _____
RED-IN YELLOW-OUT
AS INSTALLED
DATE _____
BY _____

6' X 6' BUNGALOW

PROPOSED D	M	Y	REVISIONS	D	C	COMPLETED D	M	Y	C

REGION SOUTHERN
SUB. PEORIA 362

SIGNALS AND COMMUNICATIONS HOMEWOOD | DES. KLT
15 SEPTEMBER 2009 | CH. MKN

BUNGALOW LAYOUT SIDE "D"
LOW IMPEDANCE GROUND PLANE
HANNA DRIVE
PEKIN, IL

PEO-010. 80-04

SAFETRAN SYSTEM CORP.
LOUISVILLE DIVISION, LOUISVILLE, KY

SAFETRAN SYSTEMS CORPORATION

DES. : KLT	DATE: 09/15/09	JOB NO.: PIC410194	
CKD. : MKN	ISSUE DATE:	EST. NO. :	
DRN. : KLT	PLAN NO. :	SHEET 4 OF 15	
P TIME: 10:24	P DATE: 06-OCT-2009	CAD ID.: PEO-010. 80-04	

WATERMARK

PEO-010. 80-05. dgn
06-OCT-2009

NO.	DATE	BY	DESCRIPTION	APP. BY
1				
2				
3				
4				
5				

NOTES:

1) DISABLE THE DISPLAY HEATER BY REMOVING JUMPER J-22 (LOCATED AT THE EDGE OF THE DISPLAY MODULE CARD THAT PLUGS INTO THE CHASSIS).

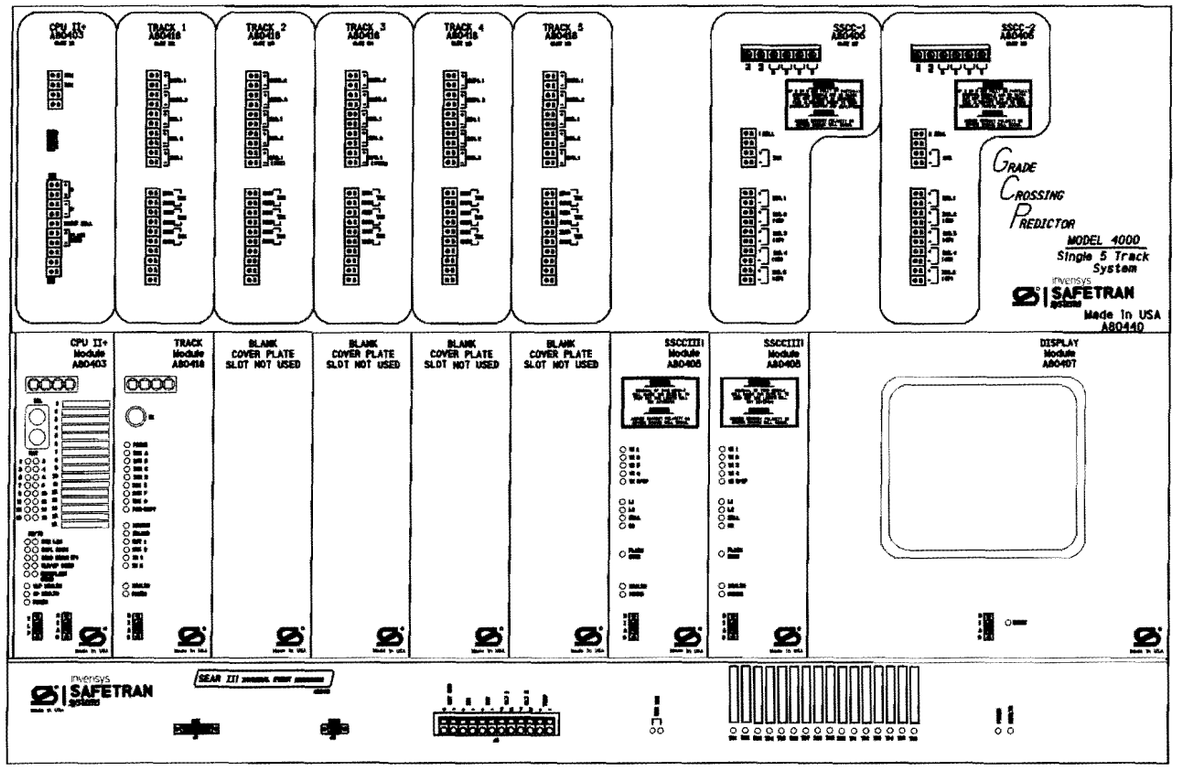

ATTENTION!

ENSURE THE DISPLAY MODULE HEATER IS DISABLED. LEAVING THE DISPLAY HEATER ENABLE WILL REDUCE THE AMOUNT OF BATTERY STANDBY TIME IN THE EVENT OF AN AC POWER FAILURE.

HEATER FUNCTION IS
JUMPER SELECTABLE ON
THE DISPLAY MODULE BOARD.
THREE OPTIONS ARE AVAILABLE.
NORMAL LCD HTR (DEFAULT)
HI CURRENT
NO JUMPER (HEATER DISABLED)

PROPOSED
DES. No. _____
RED-IN YELLOW-OUT
AS INSTALLED
DATE _____
BY _____

6' X 6' BUNGALOW

PROPOSED D	M	Y	REVISIONS	D	C	COMPLETED D	M	Y	C

REGION SOUTHERN
SUB. PEORIA 362
CN

SIGNALS AND COMMUNICATIONS HOMEWOOD | DES. KLT
15 SEPTEMBER 2009 | CH. MKN

GCP 4000 NON-REDUNDANT
5 TRACK TRK CHASSIS & MODULE LAYOUT
HANNA DRIVE
PEKIN, IL

PEO-010. 80-05

SAFETRAN SYSTEM CORP.
LOUISVILLE DIVISION, LOUISVILLE, KY

SAFETRAN SYSTEMS CORPORATION		
DES.: KLT	DATE: 09/15/09	JOB NO.: PICA10194
CKD.: MKN	ISSUE DATE:	EST. NO.:
DRN.: KLT	PLAN NO.:	SHEET 5 OF 15
P. TIME: 10:24	P. DATE: 06-OCT-2009	CAD ID.: PEO-010. 80-05

WATERMARK

PEO-010. 80-06. dgn
06-OCT-2009

NO.	DATE	BY	DESCRIPTION	APP. BY
1				
2				
3				
4				
5				

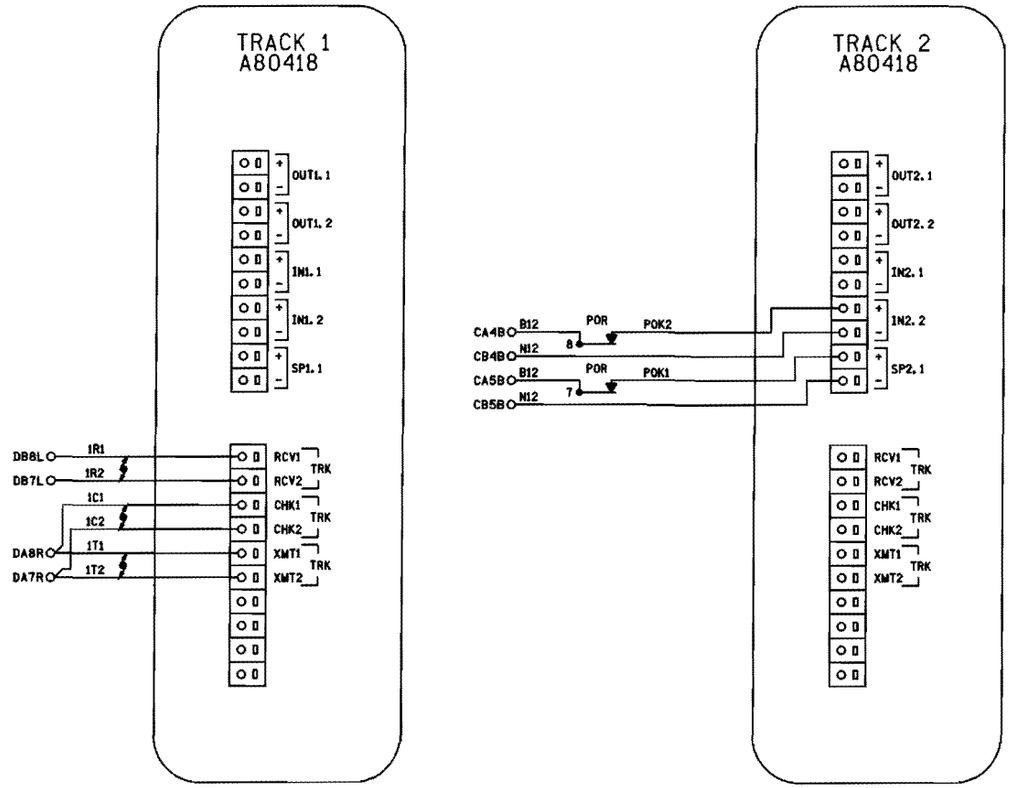

NOTES:

1) ALL WIRING #16 AWG UNLESS OTHERWISE NOTED.

2) DENOTES TWISTED PAIR.

PROPOSED
DES. No. _____
RED-IN YELLOW-OUT
AS INSTALLED
DATE _____
BY _____

6' X 6' BUNGALOW

PROPOSED D	M	Y	REVISIONS	D	C	COMPLETED D	M	Y	C

REGION SOUTHERN
SUB. PEORIA 362
CN

SIGNALS AND COMMUNICATIONS HOMEWOOD — DES. KLT
15 SEPTEMBER 2009 — CH. MKN
GCP 4000

HANNA DRIVE
PEKIN, IL

PEO-010. 80-06

SAFETRAN SYSTEM CORP.
LOUISVILLE DIVISION, LOUISVILLE, KY

SAFETRAN SYSTEMS CORPORATION

DES.: KLT	DATE: 09/15/09	JOB NO.: PICA10194	
CAD.: MKN	ISSUE DATE:	EST. NO.:	
DRN.: KLT	PLAN NO.:	SHEET 6 OF 15	
P TIME: 10:24	P DATE: 06-OCT-2009	CAD ID.: PEO-010. 80-06	

WATERMARK

PEO-010.80-07.dgn
06-OCT-2009

NO.	DATE	BY	REVISIONS DESCRIPTION	APP. BY
1				
2				
3				
4				
5				

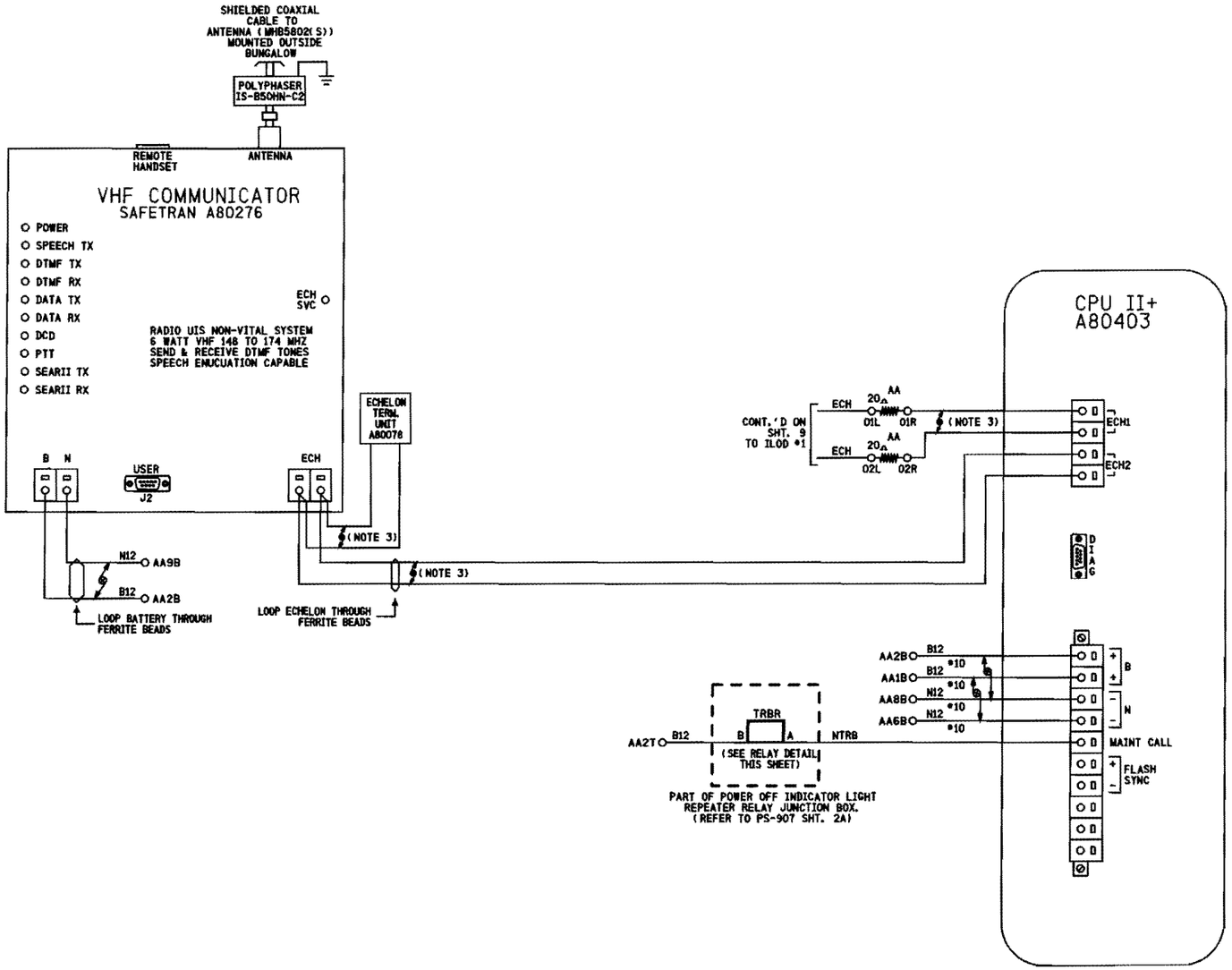

RELAY DETAIL

RELAY - POTTER & BRUMFIELD
MODEL KUMP-14D18-12 SOCKET MOUNTABLE
12 VDC W/ 3 FORM C CONTACTS.

SOCKET - SCREW TERMINAL
MODEL 27E121.

RELAY WIRING DIAGRAM (REAR VIEW)

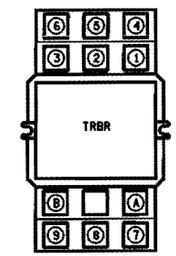

LOCATED OVER ENTRY DOOR

NOTE:
SOCKET NUMBERING CORRESPONDS DIRECTLY WITH RELAY NUMBERING.
(COIL SHOWN ENERGIZED)

NOTES:
1) ALL WIRING #16 AWG UNLESS OTHERWISE NOTED.
2) ⚡ DENOTES TWISTED PAIR.
3) USE BELDEN CABLE, PART #8461-u500-60 FOR ALL ECHELON AND LAN WIRING.

PROPOSED
DES. No. _____
RED-IN YELLOW-OUT
AS INSTALLED
DATE _____
BY _____

6' X 6' BUNGALOW

PROPOSED D	M	Y	REVISIONS	D	C	COMPLETED D	M	Y	C

REGION SOUTHERN
SUB. PEORIA 362
CN

SIGNALS AND COMMUNICATIONS HOMEWOOD | DES. KLT
15 SEPTEMBER 2009 | CH. MKN

GCP 4000
CPUII+ & VHF COMMUNICATOR
HANNA DRIVE
PEKIN, IL

PEO-010.80-07

SAFETRAN SYSTEM CORP.
LOUISVILLE DIVISION, LOUISVILLE, KY

SAFETRAN SYSTEMS CORPORATION

DES.: KLT	DATE: 09/15/09	JOB NO.: P1CA10194	
CKD.: MKN	ISSUE DATE:	EST. NO.:	
DRN.: KLT	PLAN NO.:	SHEET 7 OF 15	
P TIME: 10:24	P DATE: 06-OCT-2009	CAD ID.: PEO-010.80-07	

WATERMARK

PEO-010. 80-08. dgn
06-OCT-2009

REVISIONS				
NO.	DATE	BY	DESCRIPTION	APP. BY
1				
2				
3				
4				
5				

RTU INPUTS TIME ALARMS

1. CROSSING ACTIVE FOR > 20 MIN
2. GATE POSITION FAIL (GATE NOT DOWN)
3. GATE NOT UP AFTER CROSSING CLEAR
4. EQUIPMENT FAILURE (INC SSCC OR SEAR FAILURE, MULTIPLE BURNT BULBS, AND LOW BATT)

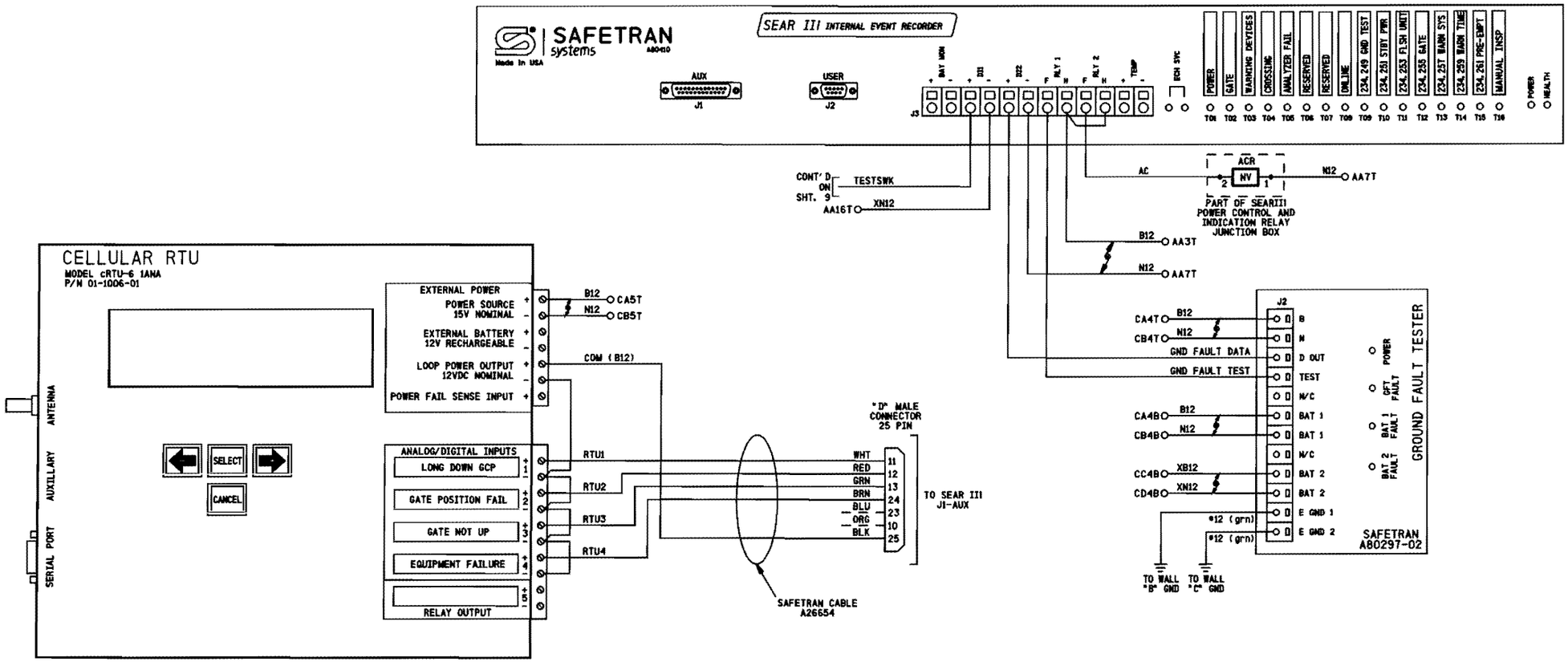

(SUPPLIED BY RAILROAD)

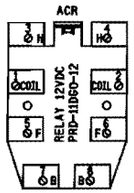

ACR - P&B RELAY, 2FB
(WITH TWO 30A CONTACTS @ 240VAC)
RELAY PART #PRD-11DGO-12

NOTES:

1) ALL WIRING #16 AWG UNLESS OTHERWISE NOTED.

2) DENOTES TWISTED PAIR.

PROPOSED
DES. No. _____
RED-IN YELLOW-OUT
AS INSTALLED
DATE _____
BY _____

6' X 6' BUNGALOW

PROPOSED			REVISIONS	D	C	COMPLETED			C
D	M	Y				D	M	Y	

REGION SOUTHERN
SUB. PEORIA 362

SIGNALS AND COMMUNICATIONS HOMEWOOD
DES. KLT
15 SEPTEMBER 2009
CH. MKN

GCP 4000/SEAR III
INTERNAL EVENT ANALYZER WITH GFT
HANNA DRIVE
PEKIN, IL

PEO-010. 80-08

SAFETRAN SYSTEM CORP.
LOUISVILLE DIVISION, LOUISVILLE, KY

SAFETRAN SYSTEMS CORPORATION

DES.: KLT	DATE: 09/15/09	JOB NO.: PICA10184	
CKD.: MKN	ISSUE DATE:	EST. NO.:	
DRN.: KLT	PLAN NO.:	SHEET 8 OF 15	
P TIME: 10:25	P DATE: 06-OCT-2009	CAD ID.: PEO-010. 80-08	

$WATERMARK

PEO-010.80-09.dgn
06-OCT-2009

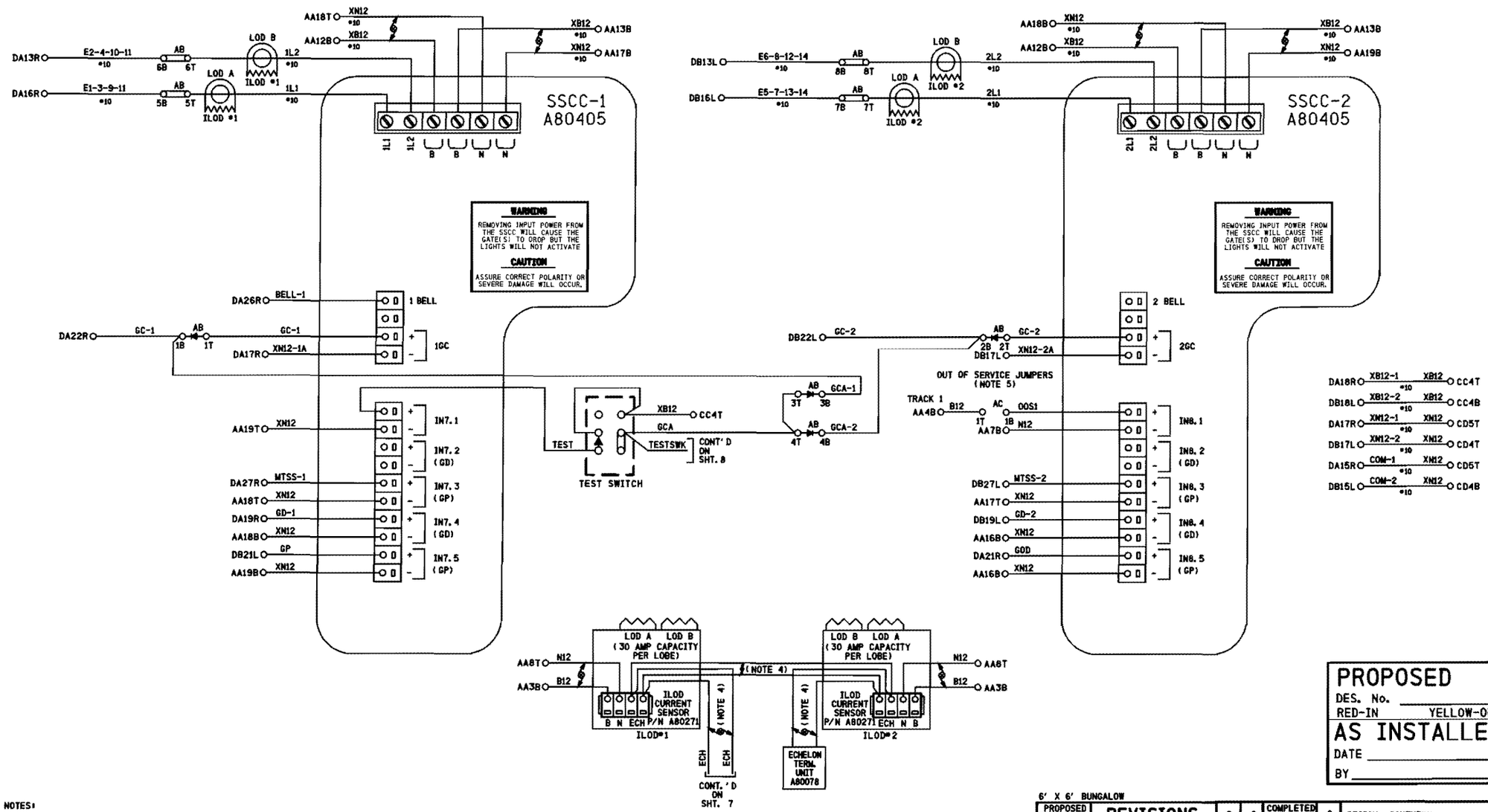

NOTES:

1) DENOTES RECTIFIER : (SAFETRAN #8008A299006)

2) DENOTES TWISTED PAIR.

3) ALL WIRING TO BE #16 AWG MINIMUM UNLESS OTHERWISE NOTED.

4) USE BELDEN CABLE, PART #8461-u500-60 FOR ALL ECHELON AND LAN WIRING.

5) TO TAKE TRACK 1 (T1) OUT OF SERVICE, JUMPER AC1T TO AC1B

PROPOSED
DES. No. _____
RED-IN YELLOW-OUT
AS INSTALLED
DATE _____
BY _____

6' X 6' BUNGALOW

PROPOSED D	M	Y	REVISIONS	D	C	COMPLETED D	M	Y	C

REGION SOUTHERN
SUB. PEORIA 362
SIGNALS AND COMMUNICATIONS HOMEWOOD
DES. KLT
15 SEPTEMBER 2009
CH. MKN
GCP 4000/SSCCIII
2-20 AMP CONTROLLERS W/ 2 ILODS
HANNA DRIVE
PEKIN, IL
PEO-010.80-09

SAFETRAN SYSTEM CORP.
LOUISVILLE DIVISION, LOUISVILLE, KY

SAFETRAN SYSTEMS CORPORATION

DES.: KLT	DATE: 08/15/09	JOB NO.: PICA10194
CKD.: MKN	ISSUE DATE:	EST. NO.:
DRN.: KLT	PLAN NO.:	SHEET 9 OF 15
P TIME: 10:25	P DATE: 06-OCT-2009	CAD ID.: PEO-010.80-09

REVISIONS

NO.	DATE	BY	DESCRIPTION	APP. BY
1				
2				
3				
4				
5				

WATERMARK

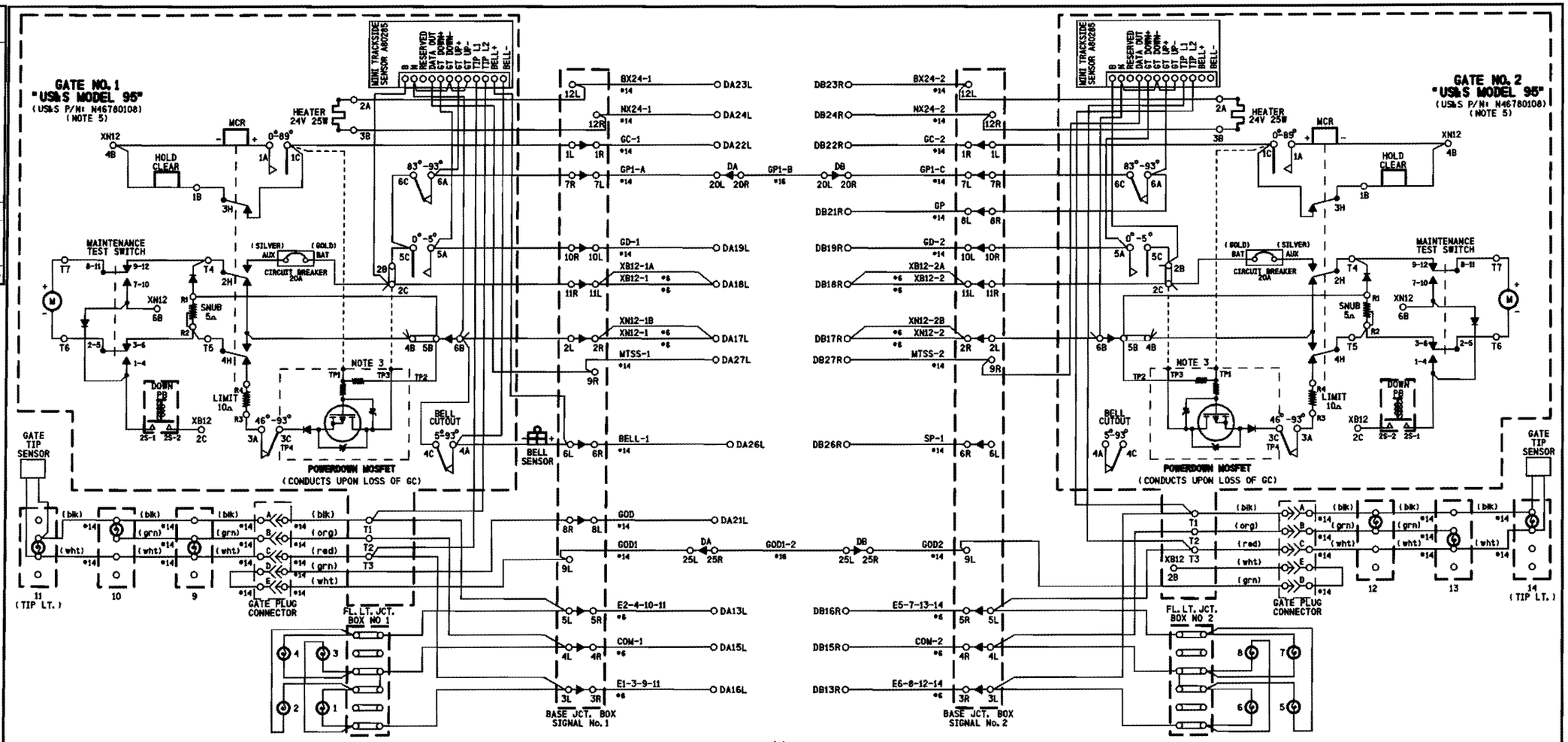

NOTES:

1) ON GATE No. 1 ADD STRAP BETWEEN TERMINAL 2B & 2C, ADD JUMPER BETWEEN TERMINAL 2B & 5C, BETWEEN TERMINAL 5C & 6C
2) ON GATE No. 2 ADD STRAP BETWEEN TERMINAL 2B & 2C ADD JUMPER BETWEEN TERMINAL 2B & 5C AND CONNECT GP AS SHOWN
3) POWERDOWN PCB TERMINALS TP1, TP3 & TP4 FIT OVER TERMINALS 1C, 2C & 3C RESPECTIVELY
4) ALL WIRING #10 AWG MINIMUM UNLESS OTHERWISE NOTED. WIRE SIZES SHOWN ARE MINIMUM GAUGE.
5) GATE DESCENT TIME (RELEASE FROM VERTICAL TO FULLY HORIZONTAL) TO BE WITHIN 11 SECONDS.
6) ENSURE ALL TERMINALS HAVE TWO SHOULDER NUTS.
7) FOR GATE(S) THAT HAS BELL, ADD JUMPER BETWEEN 4C AND 6B.

PROPOSED
DES. No. _____
RED-IN YELLOW-OUT
AS INSTALLED
DATE _____
BY _____

6' X 6' BUNGALOW

PROPOSED D	M	Y	REVISIONS	D	C	COMPLETED D	M	Y	C

REGION SOUTHERN
SUB. PEORIA 362
SIGNALS AND COMMUNICATIONS HOMEWOOD
DES. KLT
15 SEPTEMBER 2009
CH. MKN
GATE MECHANISM CONTROL CIRCUITS
US&S MODEL 95
HANNA DRIVE
PEKIN, IL
PEO-010. 80-10

SAFETRAN SYSTEM CORP.
LOUISVILLE DIVISION, LOUISVILLE, KY

SAFETRAN SYSTEMS CORPORATION
DES.: KLT DATE: 09/15/09 JOB NO.: PICA10194
CKD.: MKN TSSUE DATE: EST. NO.:
DRN.: KLT PLAN NO.: SHEET 10 OF 15
P TIME: 110:25 P DATE: 06-OCT-2009 CAD ID.: PEO-010. 80-10

PEO-010. 80-10. dgn
06-OCT-2009

WATERMARK

NO.	DATE	BY	REVISIONS DESCRIPTION	APP. BY
1				
2				
3				
4				
5				

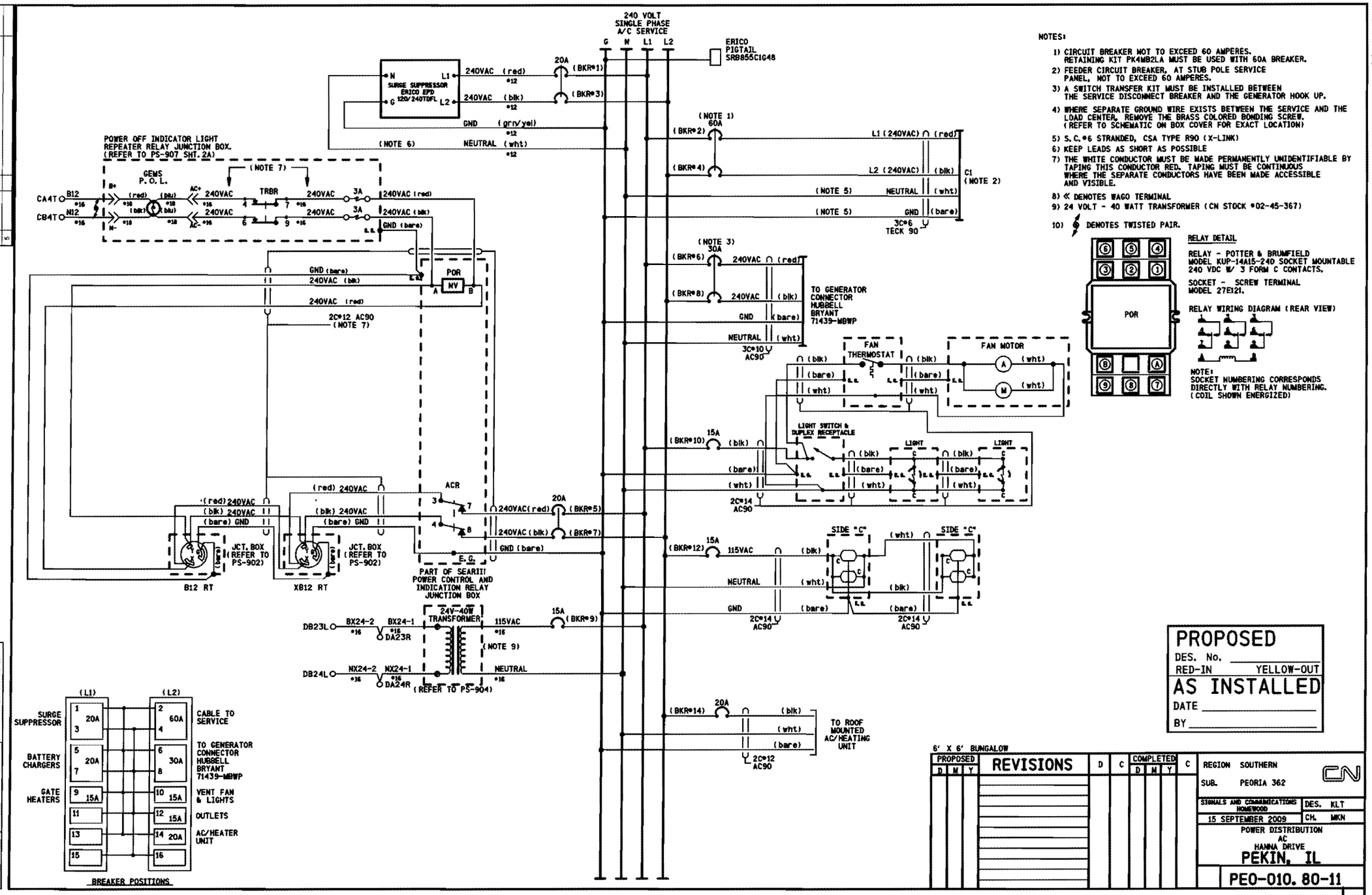

NOTES:

1) CIRCUIT BREAKER NOT TO EXCEED 60 AMPERES. RETAINING KIT PK4MB2LA MUST BE USED WITH 60A BREAKER.
2) FEEDER CIRCUIT BREAKER, AT STUB POLE SERVICE PANEL, NOT TO EXCEED 60 AMPERES.
3) A SWITCH TRANSFER KIT MUST BE INSTALLED BETWEEN THE SERVICE DISCONNECT BREAKER AND THE GENERATOR HOOK UP.
4) WHERE SEPARATE GROUND WIRE EXISTS BETWEEN THE SERVICE AND THE LOAD CENTER, REMOVE THE BRASS COLORED BONDING SCREW. (REFER TO SCHEMATIC ON BOX COVER FOR EXACT LOCATION)
5) S.C. #6 STRANDED, CSA TYPE R90 (X-LINK)
6) KEEP LEADS AS SHORT AS POSSIBLE
7) THE WHITE CONDUCTOR MUST BE MADE PERMANENTLY UNIDENTIFIABLE BY TAPING THIS CONDUCTOR RED. TAPING MUST BE CONTINUOUS WHERE THE SEPARATE CONDUCTORS HAVE BEEN MADE ACCESSIBLE AND VISIBLE.
8) « DENOTES WAGO TERMINAL
9) 24 VOLT - 40 WATT TRANSFORMER (CN STOCK #02-45-367)
10) DENOTES TWISTED PAIR.

RELAY DETAIL

RELAY - POTTER & BRUMFIELD MODEL KUP-14A15-240 SOCKET MOUNTABLE 240 VDC W/ 3 FORM C CONTACTS.

SOCKET - SCREW TERMINAL MODEL 27E121.

RELAY WIRING DIAGRAM (REAR VIEW)

NOTE: SOCKET NUMBERING CORRESPONDS DIRECTLY WITH RELAY NUMBERING. (COIL SHOWN ENERGIZED)

BREAKER POSITIONS

PROPOSED
DES. No. _____
RED-IN YELLOW-OUT
AS INSTALLED
DATE _____
BY _____

6' X 6' BUNGALOW

PROPOSED D	M	Y	REVISIONS	D	C	COMPLETED D	M	Y	C

REGION SOUTHERN
SUB. PEORIA 362
SIGNALS AND COMMUNICATIONS HOMEWOOD
15 SEPTEMBER 2009
DES. KLT
CH. MKN
POWER DISTRIBUTION AC
HANNA DRIVE
PEKIN, IL
PEO-010. 80-11

SAFETRAN SYSTEM CORP.
LOUISVILLE DIVISION, LOUISVILLE, KY

SAFETRAN SYSTEMS CORPORATION

DES. : KLT	DATE: 09/15/09	JOB NO. : PIC410194	
CKD. : MKN	ISSUE DATE:	EST. NO. :	
DRN. : KLT	PLAN NO. :	SHEET 11 OF 15	
P TIME: 10:25	P DATE: 06-OCT-2009	CAD ID. : PEO-010. 80-11	

PEO-010. 80-11. dgn
06-OCT-2009

WATERMARK

PEO-010.80-12.dgn
06-OCT-2009

NO.	DATE	BY	REVISIONS DESCRIPTION	APP. BY
1				
2				
3				
4				
5				

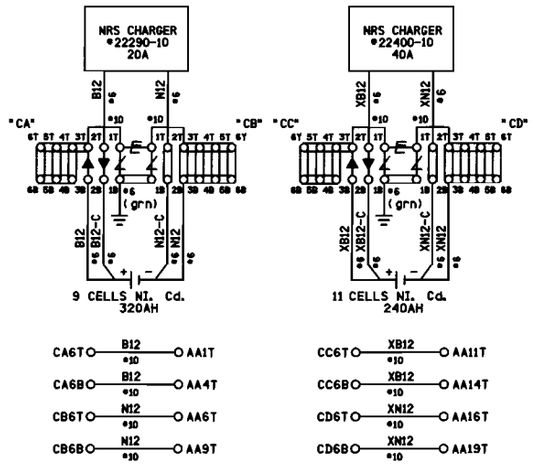

SAFETRAN SYSTEMS CORPORATION	
DES.: KLT	DATE: 09/15/09
CKD.: MKN	ISSUE DATE:
DRN.: KLT	PLAN NO.:
P. TIME: 10:25	P. DATE: 06-OCT-2009
JOB NO.: PIC410194	
EST. NO.:	
SHEET 12 OF 15	
CAD ID.: PEO-010.80-12	

PROPOSED
DES. No. _____
RED-IN YELLOW-OUT
AS INSTALLED
DATE _____
BY _____

6' X 6' BUNGALOW

PROPOSED D	M	Y	REVISIONS	D	C	COMPLETED D	M	Y	C

REGION SOUTHERN
SUB. PEORIA 362

SIGNALS AND COMMUNICATIONS HOMEWOOD
DES. KLT
15 SEPTEMBER 2009
CH. MKN

POWER DISTRIBUTION
DC
HANNA DRIVE
PEKIN, IL

PEO-010.80-12

SAFETRAN SYSTEM CORP.
LOUISVILLE DIVISION, LOUISVILLE, KY

WATERMARK

NO.	DATE	BY	DESCRIPTION	APP.	BY
1					
2					
3					
4					
5					

PEO-010.80-13.dgn
06-OCT-2009

Program Report

Location and SIN

DOT Number: 123456A
Milepost Number: 10.80
Site Name: HANNA DRIVE

SIN: 762010010016

MCF and Template Selection

MCF Name: GCP-T6X-02-1.mcf
MCF Revision: 021
MCFCRC: 6076E435

Template = 1A:6 Trk Bi

Check Numbers

Office Check No. (DT 4.6.0): 2CFDF0A1
Office Check Number: 2CFDF0A1
Config. Check Number: 48F2B4A7
(Based on MCF Revision 021)

Program

BASIC: module configuration
Track 1 Slot = Track
Track 2/RIO 1 Slot = Not Used
Track 3 Slot = Not Used
Track 4 Slot = Not Used
Track 5/RIO 2 Slot = Not Used
Track 6/RIO 3 Slot = Not Used
SSCC-1 Slot = SSCC3I
SSCC-2 Slot = SSCC3I
SEAR Used = Yes

BASIC: MS/GCP operation
Track 1 : MS/GCP Operation = Yes

BASIC: Island operation
Track 1 : Island Used = Internal

BASIC: preemption
Preempt Logic = No

BASIC: radio Dax links
Radio DAX link A Used = No
Radio DAX link B Used = No

BASIC: Vital Comms links
Vital Comms link 1 Used = No
Vital Comms link 2 Used = No

PREDICTORS: track 1
Track 1 : Prime Used = Yes
Track 1 : Dax A Used = No
Track 1 : Dax B Used = No
Track 1 : Dax C Used = No
Track 1 : Dax D Used = No
Track 1 : Dax E Used = No
Track 1 : Dax F Used = No
Track 1 : Dax G Used = No

GCP: track 1
Track 1 : GCP Freq Category = Standard
Track 1 : GCP Frequency = 430 Hz
Track 1 : Approach Distance = 2055 ft
Track 1 : Uni/Bi/Sim-Bidirni = Bidirni
Track 1 : GCP Transmit Level = Medium
Track 1 : Island Connection = Isi1
Track 1 : Island Distance = 120 ft
Track 1 : Computed Distance = 9999 ft
Track 1 : Linearization Steps = 100

GCP: track 1 enhanced det
Track 1 : Inbound PS Sensitivity = High
Track 1 : Speed Limiting Used = Yes
Track 1 : Outbound False Act Lvl = Normal
Track 1 : Outbound PS Timer = 20 sec
Track 1 : Trailing Switch Logic = On
Track 1 : Post Joint Detn Time = 15 sec
Track 1 : Adv Appr Predn = No
Track 1 : Cancel Pickup Delay = This Isi

GCP: track 1 prime
Track 1 : Prime Warning Time = 30 sec
Track 1 : Prime Offset Distance = 0 ft
Track 1 : Switch MS EZ Level = 14
Track 1 : Prime MS/GCP Mode = Pred
Track 1 : Prime Pickup Delay = 30 sec
Track 1 : Prime UAX = Not Used

GCP: track 1 pos start
Track 1 : Positive Start = Off
Track 1 : Sudden Shnt Det Used = No
Track 1 : Low EZ Detection Used = No

GCP: track 1 MS Control
Track 1 : MS/GCP Ctrl IP Used = No
Track 1 : MS Sensitivity Level = 0
Track 1 : Compensation Level = 1300
Track 1 : Warn Time-Ballast Comp = High
Track 1 : Low EX Adjustment = 39
Track 1 : Bidirn Dax Passthru = No
Track 1 : False Act on Train Stop = No
Track 1 : EX Limiting Used = Yes
Track 1 : EZ Correction Used = Yes

ISLAND: track 1
Track 1 : IsiFrequency = 11.5 kHz
Track 1 : Pickup Delay (2s +) = 0 sec
Track 1 : IsiEnable IP Used = No

AND: track Anding
AND 1 XR Used = Yes
AND 2 Used = No
AND 3 Used = No
AND 4 Used = No
AND 5 Used = No
AND 6 Used = No
AND 7 Used = No
AND 8 Used = No

AND: AND 1 XR
AND 1 XR Track 1 = Prime
AND 1 Enable Used = Yes
And 1 Enable Pickup = 0 sec
AND 1 Enable Drop = 0 sec
AND 1 Wrap Used = No

ADVANCED: MS restart
MS/GCP Restart Used = No

ADVANCED: out of service
OOS Control = OOS IPs

ADVANCED: out of service 2
T1 OOS Control = OOS Input 1
T1 OOS Controls = GCP and Island

ADVANCED: track wrap circuits
Wrap LOS Timer = 5 sec
Track 1 Wrap Used = No

ADVANCED: trk 1 overrides
Track 1 : AllPredictors Override Used = No

ADVANCED: OR logic
OR 1 Used = No
OR 2 Used = No
OR 3 Used = No
OR 4 Used = No

ADVANCED: Internal I/O 1
Pass Thrus = No
Int.1 Sets = Not Used
Int.1 Set by = Not Used
Int.2 Sets = Not Used
Int.2 Set by = Not Used
Int.3 Sets = Not Used
Int.3 Set by = Not Used
Int.4 Sets = Not Used
Int.4 Set by = Not Used

ADVANCED: Internal I/O 2
Int.5 Sets = Not Used
Int.5 Set by = Not Used
Int.6 Sets = Not Used
Int.6 Set by = Not Used
Int.7 Sets = Not Used
Int.7 Set by = Not Used
Int.8 Sets = Not Used
Int.8 Set by = Not Used

ADVANCED: Internal I/O 3
Int.9 Sets = Not Used
Int.9 Set by = Not Used
Int.10 Sets = Not Used
Int.10 Set by = Not Used
Int.11 Sets = Not Used
Int.11 Set by = Not Used
Int.12 Sets = Not Used
Int.12 Set by = Not Used

ADVANCED: Internal I/O 4
Int.13 Sets = Not Used
Int.13 Set by = Not Used
Int.14 Sets = Not Used
Int.14 Set by = Not Used
Int.15 Sets = Not Used
Int.15 Set by = Not Used
Int.16 Sets = Not Used
Int.16 Set by = Not Used

ADVANCED: site options
Daylight Savings = On
Units = Standard
Maint Call Rpt IP Used = No
Emergency Activate IP = No
EZ/EX Logging = Change
EZ/EX Point Change = 3

SSCC
Gates Used = Yes
SSCC1+2 GPs Coupled = Yes
Min Activation = 20 sec
Rmt Activation Cancel = 3 min
Bell On Gate Rising = No
Mute Bell On Gate Down = No
SSCC1V Controller Used = No

SSCC: 1
SSCC-1 Activation = AND 1 XR
SSCC-1 Gate Delay = 4 sec
SSCC-1 Number of GPs = 1
SSCC-1 Number of GDs = 1
SSCC 1 : Flash Rate = 60
SSCC 1 : Low Battery Detection = No
SSCC 1 : Flash Sync = master
SSCC 1 : Invert Gate Output = No
SSCC 1 : Lamp Neutral Test = Off
Aux-1 Xng Ctrl Used = No

SSCC: 2
SSCC-2 Activation = AND 1 XR
SSCC-2 Gate Delay = 4 sec
SSCC-2 Number of GPs = 0
SSCC-2 Number of GDs = 1
SSCC 2 : Flash Rate = 60
SSCC 2 : Low Battery Detection = No
SSCC 2 : Flash Sync = slave
SSCC 2 : Invert Gate Output = No
SSCC 2 : Lamp Neutral Test = Off
Aux-2 Xng Ctrl Used = No

OUTPUT: assignment page 1
OUT 1.1 = Not Used
OUT 1.2 = Not Used

INPUT: assignment page 1
IN 1.1 = Not Used
IN 1.2 = Not Used

IO: assignment SSCC
OUT GC 1 = Gate Output 1
OUT GC 2 = Gate Output 2
IN 7.1 = AND 1 XR Enable
IN 7.2 = Not Used
IN 7.3 = Not Used
IN 7.4 = GD 1.1
IN 7.5 = GP 1.1
IN 8.1 = Out Of Service IP 1
IN 8.2 = Not Used
IN 8.3 = Not Used
IN 8.4 = GD 2.1
IN 8.5 = Not Used

SEAR
SEAR Subnode = 99
DI 1 = General
DI 2 = Gnd Flt Tester 1
Rly 1 = Ground Fault Test
Rly 2 = AC Control

SEAR: Inputs
SP 2.1 = POK 1
SP 3.1 = Not Used
SP 4.1 = Not Used
SP 5.1 = Not Used
SP 6.1 = Not Used

SEAR: slot 1-4 Inputs
IN 1.1 = Not Used
IN 1.2 = Not Used
IN 2.1 = Not Used
IN 2.2 = POK 2
IN 3.1 = Not Used
IN 3.2 = Not Used
IN 4.1 = Not Used
IN 4.2 = Not Used

SEAR: Inputs slot 5
IN 5.1 = Not Used
IN 5.2 = Not Used

SEAR: Inputs slot 6
IN 6.1 = Not Used
IN 6.2 = Not Used

SEAR: slot 7-8 Inputs
IN 7.2 = Not Used
IN 7.3 = TSS 1
IN 8.2 = Not Used
IN 8.3 = TSS 2
IN 8.5 = General 2

SITE: programming
Radio Subnode = 1
Field Password = Off
Low Battery Enabled = Off

Configuration Package File

Filename: 123456A.pac
Date/Time: 9/30/2009 13:01:04

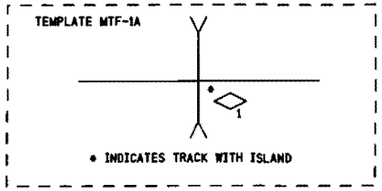

NOTES:

1) DISTANCE(S) TO BE VERIFIED AT INSTALLATION. INDICATE SELECTED PROGRAMMED VALUE IF DIFFERENT THAN SHOWN. REFER TO 4000 GCP INSTRUCTION/INSTALLATION MANUAL FOR PROGRAMMING PARAMETERS.

2) PROGRAM TEXT HIGHLITED IN RED INDICATES 4000 PROGRAM MODIFICATIONS TO DEFAULT PROGRAM VALUES.

3) EACH CONSTANT WARNING DEVICE SYSTEM TO BE PROGRAMMED TO CONVERT TO A MOTION SENSOR 300 FEET FROM EDGE OF ROAD TRAVELLED WAY.
SHUNT TRACK 300 FEET FROM EDGE OF ROAD TRAVELLED WAY AND NOTE "EZ" VALUE.
PROGRAM EACH SYSTEM WITH THE INDICATED "EZ" VALUE +2.

4) VERIFY SET TIMER VALUE TO MATCH ACTUAL TRAIN MOVEMENT WITHIN THE CROSSING APPROACH CIRCUITS.

PROPOSED
DES. No. _____
RED-IN YELLOW-OUT
AS INSTALLED
DATE _____
BY _____

PROPOSED D	M	Y	REVISIONS	D	C	COMPLETED D	M	Y	C

REGION SOUTHERN
SUB. PEORIA 362
CN

SIGNALS AND COMMUNICATIONS HOMEWOOD
15 SEPTEMBER 2009
DES. KLT
CH. MKN

GCP 4000
PROGRAM INFORMATION
HANNA DRIVE
PEKIN, IL

PEO-010.80-13

SAFETRAN SYSTEM CORP.
LOUISVILLE DIVISION, LOUISVILLE, KY

SAFETRAN SYSTEMS CORPORATION

DES. : KLT	DATE: 09/15/09	JOB NO. : PTCA10194	
CKD. : MKN	ISSUE DATE:	EST. NO. :	
DRN. : KLT	PLAN NO. :	SHEET 13 OF 15	
P TIME: 10:25	P DATE: 06-OCT-2009	CAD ID. : PEO-010.80-13	

WATERMARK

NO.	DATE	BY	REVISION DESCRIPTION	APP. BY
1				
2				
3				
4				
5				

TO CONFIGURE SEARII & SEARIII PRESS SITE SETUP KEY. USE ARROW KEYS TO MAKE SELECTION, PRESS ENTER AFTER SELECTION HAS BEEN MADE.

STAGE 1

PROGRAM MENU QUESTIONS	PROGRAM	OPTIONS/RANGE
DATE/TIME?	CURRENT DATE/TIME	CURRENT DATE/TIME
AUTOMATIC DST ADJUSTMENT?	YES	YES, NO
TIME ZONE?	CENTRAL	EASTERN, CENTRAL, MOUNTAIN, PACIFIC, ALASKA, HAWAII, ATLANTIC, SASKATCHEWAN, NEW FOUNLAND
SITE NAME?	HANNA DRIVE	STREET NAME
MILE POST?	10.80	MILEAGE
DOT/CROSSING IS *?	(NOTE 2)	
TESTER TYPE?	CROSSING	CROSSING, WAYSIDE
DATE FORMAT?	dd-mm-yyyy	mm-dd-yyyy, dd-mm-yyyy
TEMPERATURE FORMAT?	CELSIUS	FAHRENHEIT, CELSIUS
INDICATE HOLD?	0	SECONDS
SITE TYPE?		NO COM, BULLHORN, DIALUP, NODE, COLLECTOR
SITE ATCS ADDRESS?		7.RRR.LLL.GGG.99.01
OFFICE ATCS ADDRESS?		2.RRR.NN.DDDD
PRIMARY HOP ADDR? (FOR NODE USE)		7.RRR.LLL.GGG.00.01
BACKUP HOP ADDR1? (FOR NODE USE)		7.RRR.LLL.GGG.00.01
BACKUP HOP ADDR2? (FOR NODE USE)		7.RRR.LLL.GGG.00.01
POLL ID? (FOR NODE USE)		1-99
MODE? (FOR COLLECTOR USE)		GEN/ATCS, GENISYS
WAMS/XID? (FOR COLLECTOR USE)		ENABLED, DISABLE
OFFICE COMM. DEVICE? (FOR COLLECTOR USE)		DIRECT (RS232) MCM (RS232) MCM (ECHELON) SREAD SPEC (ECHELON) DIAL MODEM (RS232) S200 RADIO (RS422)
OFFICE PHONE NUMBER? (FOR COLLECTOR USE)		PHONE NUMBER OF WAMS
INIT STRING? (FOR COLLECTOR USE)		OPTIONAL HAYES MODEM INITIALIZATION STRING
FIELD COMM. DEVICE?		VHF COMM. (ECHELON) VHF COMM. (RS232) SPREAD SPEC (ECHELON) SPREAD SPEC (RS232)
USER PORT?	57600, 8, N, 1, N	BAUD, DATA BITS, PARITY, STOP BITS, FLOW CONTROL
AUX PORT?	9600, 8, N, 1, N	BAUD, DATA BITS, PARITY, STOP BITS, FLOW CONTROL

YOU WILL NOW SEE A MESSAGE "PLEASE WAIT COMPILING STAGE 1"
CONTINUE TO NEXT PROGRAM MENU QUESTIONS.

STAGE 2

QUESTION	PROGRAM	SELECTION 1 (MINIMUM)	SELECTION 2 (MAXIMUM)	CONDITION FOR MENU DISPLAY
RESET NAMES / MODULES ?	NO	YES	NO	ALWAYS
RAILROAD NUMBER ?	360 (IC)	1	999	ALWAYS
CROSSING CONFIGURATION ?	NORMAL	NORMAL	SPLIT GATE (NOTE 3)	ALWAYS
ENTRANCE GATES ?	2	0	8	ALWAYS
GATE POSTION FAIL TIME (SECONDS) ?	N/A	10	60	GATES > 0
BATTERY BANKS ?	2	1	3	ALWAYS
BATT MON USED ?	NO	NO	YES	ALWAYS
INTERNAL CROSSING CONTROLLERS ?	2	0	2	ALWAYS
EXTERNAL CROSSING CONTROLLERS ?	0	0	2	CROSSING CONTROLLER = YES
VHF COMMUNICATOR ?	YES	YES	NO	ALWAYS
ALLOW DTMF CONTROL ?	NO	NO	YES	RAILROAD = 360 (IC)
DIGIT *1 ?	N/A	0	9	ALLOW DTMF CONTROL = YES
DIGIT *2 ?	N/A	0	9	ALLOW DTMF CONTROL = YES
DIGIT *3 ?	N/A	0	9	ALLOW DTMF CONTROL = YES
DIGIT *4 ?	N/A	0	9	ALLOW DTMF CONTROL = YES
DIGIT *5 ?	N/A	0	9	ALLOW DTMF CONTROL = YES
DTMF TIME-OUT ?	180 (NOTE 2)	30	240	ALLOW DTMF CONTROL = YES
DTMF OUTPUT 2 DELAY ?	0	0	20	ALLOW DTMF CONTROL = YES
ILOD MODULES ?	2	0	4	ALWAYS
ANY LED BULBS USED ?	YES	NO	YES	ILOD MODULES > 0
AUTO INSPECTION ?	NO	YES	NO	ALWAYS
BELL SENSORS ?	1	0	8	ALWAYS
BELL SENSORS TSS1 ?	YES	NO	YES	BELL SENSORS > 0
BELL SENSORS TSS2 ?	NO	NO	YES	BELL SENSORS > 0
BELL SENSORS TSS3 ?	NO	NO	YES	BELL SENSORS > 0

STAGE 2 CONT'D

QUESTION	PROGRAM	SELECTION 1 (MINIMUM)	SELECTION 2 (MAXIMUM)	CONDITION FOR MENU DISPLAY
BELL SENSORS TSS4 ?	NO	NO	YES	BELL SENSORS > 0
BELL SENSORS TSS5 ?	NO	NO	YES	BELL SENSORS > 0
BELL SENSORS TSS6 ?	NO	NO	YES	BELL SENSORS > 0
BELL SENSORS TSS7 ?	NO	NO	YES	BELL SENSORS > 0
BELL SENSORS TSS8 ?	NO	NO	YES	BELL SENSORS > 0
BELL ON ?	N/A	GATES LOWERING		BELL SENSORS > 0
		GATES MOVING		
		ALWAYS		
GFT'S ?	YES	YES	NO	ALWAYS
BATTERIES ON GFT1 ?	2	1	2	GFT'S = YES
GATE TIP SENSORS ?	YES	YES	NO	GATES > 0
RTU ?	NO	NO	YES	ALWAYS
VHF VOICE CHANNEL ?	(NOTE 2)	1	8	VHF COMMUNICATOR = YES
VHF DATA CHANNEL ?	(NOTE 2)	1	8	VHF COMMUNICATOR = YES
USE CELL MODEM NON-CRITICAL FEATURE ?	NO	NO	YES	ALWAYS
FULL APPROACH MOVE ALARMS ?	ACTIVATE	ACTIVATE		ALWAYS
		DO NOT ACTIVATE		

YOU WILL NOW SEE A MESSAGE "PLEASE WAIT COMPILING STAGE 2"
CONTINUE TO NEXT PROGRAM MENU QUESTIONS.

STAGE 3

PROGRAM MENU QUESTIONS	PROGRAM
EDIT DIGITAL INPUTS	NO
EDIT BATTERIES	NO
EDIT RELAYS	NO
EDIT TEST LEDS	NO
EDIT ILOD SENSORS	NO
EDIT VHF SETTINGS	NO
GCP4K ATCS SUBNODE?	16

SAVE CONFIGURATION

NOTES:

1) ASSIGNED DTMF CODES:
ACTIVATE CROSSING (NORTH TRACK - T1) N/A 11*
DE-ACTIVATE CROSSING (NORTH TRACK - T1) N/A 10*
ACTIVATE CROSSING (SOUTH TRACK - T2) N/A 21*
DE-ACTIVATE CROSSING (SOUTH TRACK - T2) N/A 20*
ACTIVATE CROSSING (MAINTENANCE) N/A 31*
DE-ACTIVATE CROSSING (MAINTENANCE) N/A 30*

2) INDICATE SELECTION IN SPACE PROVIDED.

3) ADDITIONAL OPTIONS: DUAL CROSSING, EXTERNAL ENTRANCE GATE CONTROLLERS.

PROPOSED
DES. No. _____
RED-IN YELLOW-OUT
AS INSTALLED
DATE _____
BY _____

SEARIII EXECUTIVE 9V725 REV. A01U, SEARIII APPLICATION 9V864 REV. A01J

PROPOSED D	M	Y	REVISIONS	D	C	COMPLETED D	M	Y	C

REGION SOUTHERN
SUB. PEORIA 362
SIGNALS AND COMMUNICATIONS HOMEWOOD — DES. KLT
15 SEPTEMBER 2009 — CH. MKN
GCP 4000/SEAR III SETUP AND PROGRAM HANNA DRIVE
PEKIN, IL
PEO-010.80-14

SAFETRAN SYSTEMS CORPORATION
DES.: KLT DATE: 09/15/09 JOB NO.: PICA10194
CKD.: MKN ISSUE DATE: EST. NO.:
DRN.: KLT PLAN NO.: SHEET 14 OF 15
P TIME: 10:25 P DATE: 06-OCT-2009 CAD ID.: PEO-010.80-14

SAFETRAN SYSTEM CORP.
LOUISVILLE DIVISION, LOUISVILLE, KY

PEO-010.80-14.dgn
06-OCT-2009

WATERMARK

PEO-010, 80-15, dgn
06-OCT-2009

REVISIONS				
NO.	DATE	BY	DESCRIPTION	APP. BY
1				
2				
3				
4				
5				

CALIBRATION HISTORY

INITIAL SET UP BY: _____ DATE: _____

DC VOLTAGE READINGS AFTER CALIBRATION				CALIBRATION HISTORY										LINEARIZATION HISTORY (NOTE 1)							
				EZ/EX VALUES (TRACK UNOCCUPIED)				HARD WIRE SHUNT AT TERMINATION SHUNT						HARD WIRE SHUNT AT 50 PERCENT POINT OF SHUNT							
				EZ		EX		EZ		EX		50 PERCENT OF EZ VALUE		NO LINEARIZATION				LINEARIZATION COMPLETE			
														EZ		EX		STEP±		EZ	
				NRML	STBY	NRML	STBY	NRML	STBY	NRML	STBY	NRML	STBY	NRML	STBY	NRML	STBY	NRML	STBY	NRML	STBY
T1	Z1=	NORTH	TRACK 1																		
	Z2=	SOUTH	TRACK 1																		

CALIBRATION HISTORY

INITIAL SET UP BY: _____ DATE: _____

DC VOLTAGE READINGS AFTER CALIBRATION				CALIBRATION HISTORY										LINEARIZATION HISTORY (NOTE 1)							
				EZ/EX VALUES (TRACK UNOCCUPIED)				HARD WIRE SHUNT AT TERMINATION SHUNT						HARD WIRE SHUNT AT 50 PERCENT POINT OF SHUNT							
				EZ		EX		EZ		EX		50 PERCENT OF EZ VALUE		NO LINEARIZATION				LINEARIZATION COMPLETE			
														EZ		EX		STEP±		EZ	
				NRML	STBY	NRML	STBY	NRML	STBY	NRML	STBY	NRML	STBY	NRML	STBY	NRML	STBY	NRML	STBY	NRML	STBY
T1	Z1=	NORTH	TRACK 1																		
	Z2=	SOUTH	TRACK 1																		

CALIBRATION HISTORY

INITIAL SET UP BY: _____ DATE: _____

DC VOLTAGE READINGS AFTER CALIBRATION				CALIBRATION HISTORY										LINEARIZATION HISTORY (NOTE 1)							
				EZ/EX VALUES (TRACK UNOCCUPIED)				HARD WIRE SHUNT AT TERMINATION SHUNT						HARD WIRE SHUNT AT 50 PERCENT POINT OF SHUNT							
				EZ		EX		EZ		EX		50 PERCENT OF EZ VALUE		NO LINEARIZATION				LINEARIZATION COMPLETE			
														EZ		EX		STEP±		EZ	
				NRML	STBY	NRML	STBY	NRML	STBY	NRML	STBY	NRML	STBY	NRML	STBY	NRML	STBY	NRML	STBY	NRML	STBY
T1	Z1=	NORTH	TRACK 1																		
	Z2=	SOUTH	TRACK 1																		

NOTE:

1) **SET UP APPROACH LENGTH AND LINEARIZATION CALIBRATION**
VERIFY THAT "ENHANCED DETECTION" MODE IS PROGRAMMED "OFF" BEFORE ATTEMPTING LINEARIZATION PROCEDURES.

PROPOSED
DES. No. _____
RED-IN _____ YELLOW-OUT
AS INSTALLED
DATE _____
BY _____

PROPOSED D	M	Y	REVISIONS	D	C	COMPLETED D	M	Y	C

REGION SOUTHERN
SUB. PEORIA 362
CN

SIGNALS AND COMMUNICATIONS HOMEWOOD — DES. KLT
15 SEPTEMBER 2009 — CH. MKN

GCP 4000
CALIBRATION HISTORY
HANNA DRIVE
PEKIN, IL

PEO-010, 80-15

SAFETRAN SYSTEM CORP.
LOUISVILLE DIVISION, LOUISVILLE, KY

15

SAFETRAN SYSTEMS CORPORATION

DES.: KLT	DATE: 09/15/09	JOB NO.: P1CA20194
CKD.: MKN	ISSUE DATE:	EST. NO.:
DRN.: KLT	PLAN NO.:	SHEET 15 OF 15
P TIME: 10:25	P DATE: 06-OCT-2009	CAD ID.: PEO-010, 80-15