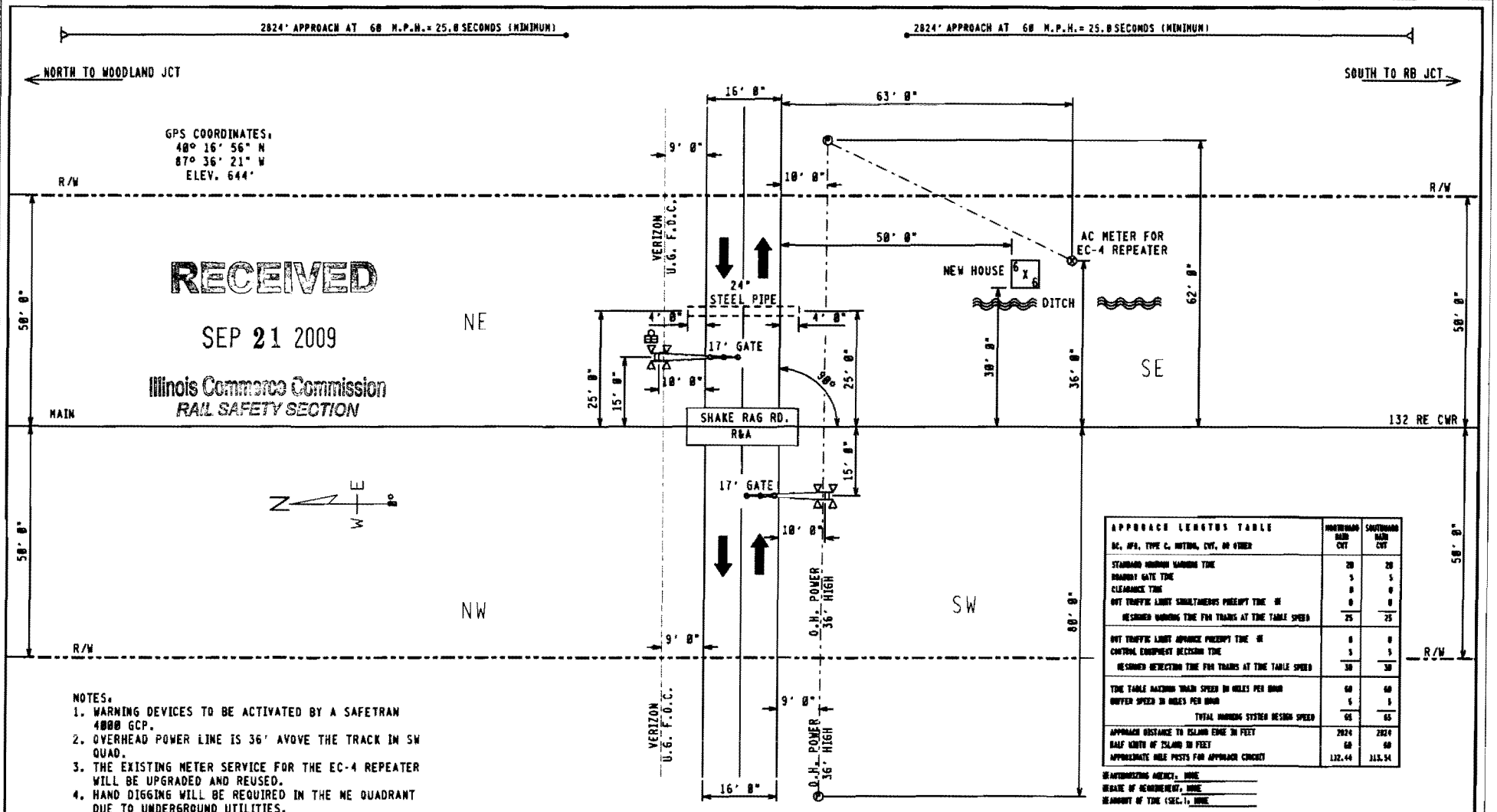

RECEIVED
SEP 21 2009
Illinois Commerce Commission
RAIL SAFETY SECTION

APPROACH LENGTHS TABLE DC, AFA, TYPE C, MOTION, CWT, OR OTHER	NORTHWARD MAIN CWT	SOUTHWARD MAIN CWT
STANDARD MINIMUM WARNING TIME	20	20
ROADWAY GATE TIME	5	5
CLEARANCE TIME	0	0
OUT TRAFFIC LIGHT SIMULTANEOUS PREEMPT TIME *	0	0
RESIGNED WARNING TIME FOR TRAINS AT TIME TABLE SPEED	25	25
OUT TRAFFIC LIGHT ADVANCE PREEMPT TIME *	0	0
CONTROL EQUIPMENT DECISION TIME	5	5
RESIGNED DETECTION TIME FOR TRAINS AT TIME TABLE SPEED	30	30
TIME TABLE MAXIMUM TRAIN SPEED IN MILES PER HOUR	60	60
BUFFER SPEED IN MILES PER HOUR	5	5
TOTAL WARNING SYSTEM DESIGN SPEED	65	65
APPROACH DISTANCE TO ISLAND EDGE IN FEET	2824	2824
HALF WIDTH OF ISLAND IN FEET	60	60
APPROXIMATE MILE POSTS FOR APPROACH CIRCUIT	112.44	113.54

*ANTIDISTURBING AGENCY: NONE
*DATE OF REQUIREMENT: NONE
*AMOUNT OF TIME (SEC.): NONE

NOTES:
1. WARNING DEVICES TO BE ACTIVATED BY A SAFETRAN 4000 GCP.
2. OVERHEAD POWER LINE IS 36' AVOVE THE TRACK IN SW QUAD.
3. THE EXISTING METER SERVICE FOR THE EC-4 REPEATER WILL BE UPGRADED AND REUSED.
4. HAND DIGGING WILL BE REQUIRED IN THE NE QUADRANT DUE TO UNDERGROUND UTILITIES.

FILE NAME: 0ZA11299.H01	REVISION DATES	PRODUCED FOR:	PRODUCED BY:	LEGEND	GUARD RAIL	METER SERVICE	STREET NAME: SHAKE RAG RD.
DATE DRAWN: 06-04-2008	06-13-08 DPL	CSX TRANSPORTATION	SAFETRAN systems	CSX ROW	O.H. POWER	POLE	CITY & STATE: ALVIN, IL
DRAWN BY: GARY CARLEE	- -	RAIL TRANSPORT GROUP ENGINEERING	7775 BAYMEADOWS WAY	R/R POLELINE	FENCE	FIRE PLUG	PROJECT #: IL2008019
CHECKED BY: ERNESTO PROSPERO	- -	COMMUNICATIONS AND SIGNALS	SUITE 250	GAS	WATER	SEWER CAP	OP #: IL0248
SSC #: JXXD00661	- -		JACKSONVILLE, FL 32256	FIBER OPTIC	SEWER	GAS VENT	DOT: 353694F

PROPOSED CROSSING LAYOUT
SCALE = 20:1

INDEX

CONTENTS

SH. NO.		REVISION NO. 1	2	3	4	5	6	7	8	9
IR1	INDEX AND REVISIONS	✓								
S01	TRACK AND SIGNAL PLAN	✓								
P01	MINIMUM PROGRAM STEPS REPORT CWE-99	✓								
E01	CROSSING HOUSE POWER DISTRIBUTION	✓								
E02	ELECTROCODE REPEATER HOUSE POWER DISTRIBUTION	✓								
C01	DETECTION DEVICE CONSIST CWE-99	✓								
C02	DETECTION CIRCUITRY CWE-99	✓								
C03	DETECTION CIRCUITRY CWE-99	✓								
C04	CROSSING WARNING DEVICE GATE CIRCUITRY	✓								
C05	CROSSING WARNING DEVICE LIGHT CIRCUITRY	✓								
C06	CROSSING WARNING DEVICE CIRCUITRY	✓								
C07	SEAR II: CONFIGURATION & FUNCTIONS	✓								
C08	ELECTROCODE REPEATER CIRCUITS	✓								

✓ = PLANS SENT TO FIELD (DISTRIBUTED)

☒ = PLANS AS-IN-SERVICED (UP TO DATE)

NEW WORK

SAFETRAN systems

PROJECT #: IL2000819

DES/CHKD BY: DPL/SWS

DATE: 06-13-00

⬭ = NOTE

4K.D01
REV. 02-29-00

DESIGN DATE	REV. NO.
06-13-00	1

REVISIONS

REV. NO.	PROJECT NO.	DESIGN DATE	IN SERVICE DATE	REVISION DATE
1	IL2000819	06-13-00		

TO BE COMPLETED ON A.I.S.

CSX TRANSPORTATION

RAIL TRANSPORT GROUP ENGINEERING
COMMUNICATIONS AND SIGNALS

WOODLAND JUNCTION TO RB JUNCTION

SHADE RAG NO. 353004F

INDEX AND REVISIONS

ALVIN, IL N.P. BZA-112.99

DESIGNED	DIGITIZED	CHECKED	DATE
SAF/DPL	SAF/DPL	SAF/SWS	06-13-00

DRAWING	SHEET NO	FILE	SHEET
-----	-----	BAZ11299	IR1

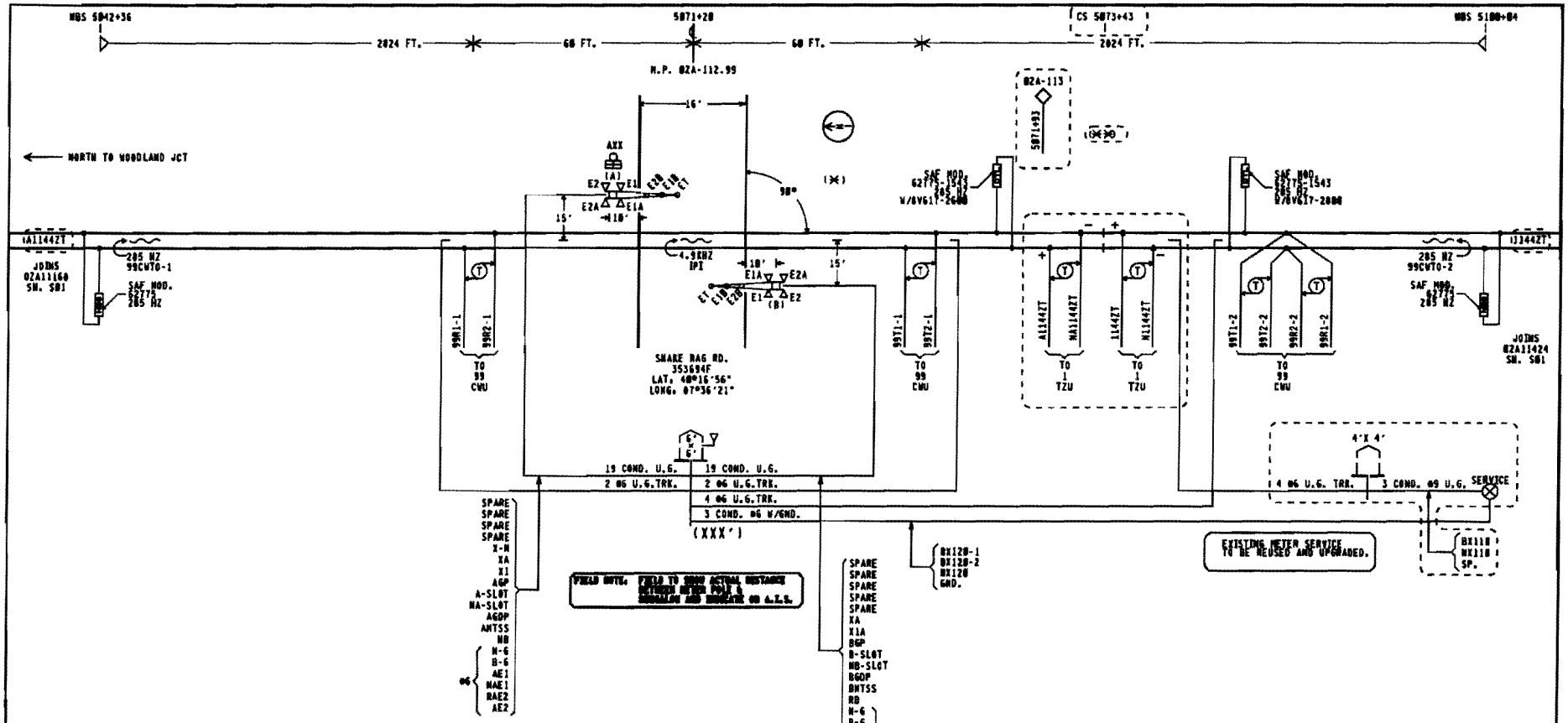

APPROACH LENGTHS TABLE DC, AFO, TYPE C, MOTION, CWT, OR OTHER	NORTHWARD MAIN CWT	SOUTHWARD MAIN CWT
STANDARD MINIMUM WARNING TIME IN SECONDS	20	20
ROADWAY GATE TIME IN SECONDS	5	5
CLEARANCE TIME IN SECONDS	0	0
DOT TRAFFIC LIGHT SIMULTANEOUS PREEMPT TIME IN SECONDS ✱	0	0
DESIGNED WARNING TIME FOR TRAINS AT TIME TABLE SPEED	25 SEC.	25 SEC.
DOT TRAFFIC LIGHT ADVANCE PREEMPT TIME IN SECONDS ✱	0	0
CONTROL EQUIPMENT DECISION TIME IN SECONDS	5	5
DESIGNED DETECTION TIME FOR TRAINS AT TIME TABLE SPEED	30 SEC.	30 SEC.
TIME TABLE MAXIMUM TRAIN SPEED IN MILES PER HOUR	60	60
BUFFER SPEED IN MILES PER HOUR	5	5
TOTAL WARNING SYSTEM DESIGN SPEED IN MILES PER HOUR	65	65
APPROACH DISTANCE TO ISLAND EDGE IN FEET	2024	2024
HALF WIDTH OF ISLAND IN FEET	60	60
APPROXIMATE MILE POSTS FOR APPROACH CIRCUIT	112.44	113.54

✱AUTHORIZING AGENCY: NONE
✱DATE OF REQUIREMENT: NONE
✱AMOUNT OF TIME (SEC.): NONE

NOTES:

1. 12" LED MAXIMUM CURRENT 1.7A AT 18 VOLTS LED GATE ARM LIGHTS .3A MAXIMUM
2. GATE LENGTH (A) 17' (B) 17'
3. (✱) = LOCATION OF CROSSING HOUSE
   (X)(X) = LOCATION OF ELECTROCODE REPEATER HOUSE
4. (N) = APPROXIMATE COMPASS NORTH.
5. TRANSMITTER LEADS FOR MOTION OR PREDICTOR EQUIPMENT SHOULD BE CONNECTED ON THE BUNGALOW OR SHORT LEAD SIDE OF THE CROSSING.
6. ISLAND TRACK LEADS SHOULD BE CONNECTED 50 FEET FROM ROAD EDGE BUT ON NARROW ROADS (20' OR LESS) ISLAND LENGTH SHALL BE 120 FEET.
7. WARNING SYSTEM APPROACH CIRCUIT DISTANCES ARE TO BE MEASURED FROM THE ISLAND TRACK CONNECTIONS.

NEW WORK EXCEPT
( ) = EXISTING

SAFETRAN systems
PROJECT #: IL2000019
DES/CHKD BY: DPL/SWS
DATE: 06-13-00

( ) = NOTE

IT FLS&GATES OR CFL 40006CP.S01 REV. 09-05-07

CSX TRANSPORTATION
RAIL TRANSPORT GROUP ENGINEERING COMMUNICATIONS AND SIGNALS

WOODLAND JCT TO RB JUNCTION

SNAKE RAG RD. 353694F/ELECTROCODE REPEATER
TRACK AND SIGNAL PLAN
ALVIN, IL M.P. 02A-112.99

DESIGNED	DIGITIZED	CHECKED	DATE
SAF/DPL	SAF/DPL	SAF/SWS	06-13-00

DESIGN DATE	REV. NO.	DRAWING	SHEET NO	FILE	SHEET
06-13-00	1	-----	-----	0AZ11299	S01

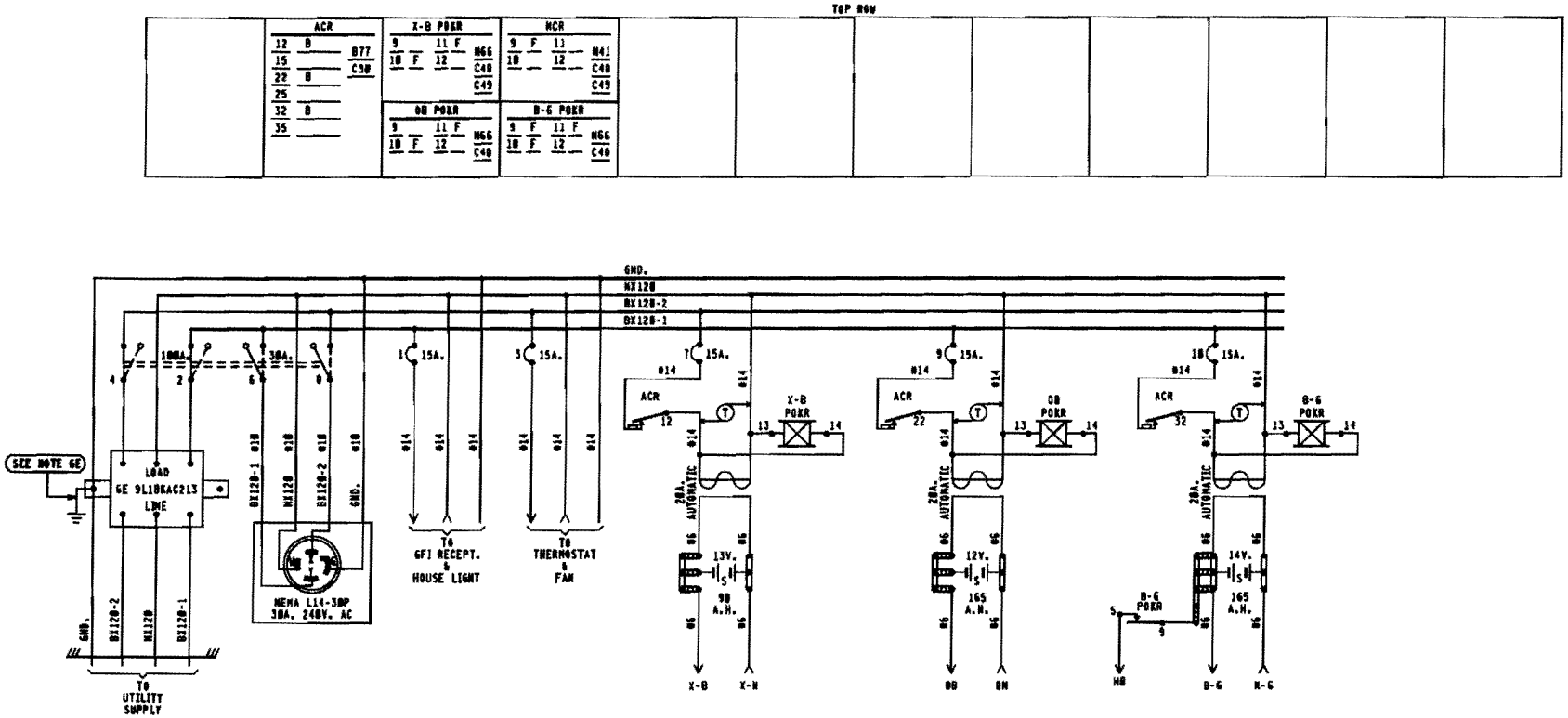

BX120-1	BX120-2
16.0 AMPS	8.0 AMPS

MAXIMUM LOAD
CALCULATED PER SS360

NOTES:

1 - REFERENCES ARE PER SCMS-13.
2 - ARRESTERS ARE PER SS382.
3 - SHELF RELAY PLACEMENT ON CONSIST CHART WAS NO SIGNIFICANCE.
4 - PLUG-IN RELAYS ARE VIEWED FROM THE FRONT OF RACK.
5 - BATTERY A.H. CAPACITY SHOWN IS THE MINIMUM REQUIREMENT.
6 - WIRING
   A - FEED TO ALL BUSSES, LIGHT CIRCUITS, MOTOR CIRCUITS TO BE #10 FLEX.
   B - 120-VOLT FEED FROM ENTRANCE TO POWER BUSS TO BE #10 FLEX.
   C - ALL TRACK WIRES TO BE #10 FLEX.
   D - ALL OTHERS TO BE #16 FLEX UNLESS NOTED.
   E - GROUND WIRE NOT NECESSARY WHEN GE ARRESTER IS MOUNTED ON GROUND PLANE OR METAL ENCLOSURE AFFIXED DIRECTLY TO BUNGALOW METALLIC STRUCTURAL MEMBER.
7 - CIRCUIT INTERRUPTERS 2 & 4 ARE MECHANICALLY INTERLOCKED WITH CIRCUIT INTERRUPTERS 6 & 8.

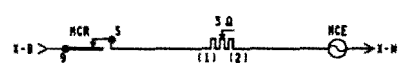

NEW WORK

SAFETRAN SYSTEMS

PROJECT #: IL2000019
DES/CHKD BY: DPL/SWS
DATE: 06-13-08

= NOTE

4000GCP.E01
REV. 02-29-08

6'X 6' RELAY HOUSE W/FARADAY SHIELD

CSX TRANSPORTATION
RAIL TRANSPORT GROUP ENGINEERING
COMMUNICATIONS AND SIGNALS

WOODLAND JUNCTION TO RB JUNCTION

SHARE RAG NO. 353604F

POWER DISTRIBUTION

ALVIN, IL M.P. BZA-112.99

DESIGNED	DIGITIZED	CHECKED	DATE
SAF/DPL	SAF/DPL	SAF/SWS	06-13-08

DESIGN DATE	REV. NO.	DRAWING	SHEET NO	FILE	SHEET
06-13-08	1	-----	-----	BAZ11299	E01

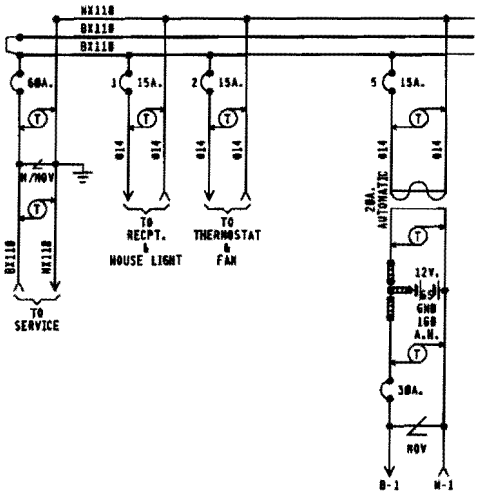

4'X 4' ELECTROCODE REPEATER HOUSE

NEW SHEET

SAFETRAN systems

PROJECT #: IL2000019
DES/CHKD BY: DPL/SWS
DATE: 06-13-00

CSX TRANSPORTATION

RAIL TRANSPORT GROUP ENGINEERING
COMMUNICATIONS AND SIGNALS

WOODLAND JUNCTION TO RB JUNCTION

ELECTROCODE REPEATER HOUSE

POWER DISTRIBUTION

ALVIN, IL N.P. BZA-113.03

4000GCP.E01
REV. 02-29-00

DESIGNED	DIGITIZED	CHECKED	DATE
SAF/DPL	SAF/DPL	SAF/SWS	06-13-00

DESIGN DATE	REV. NO.	DRAWING	SHEET NO	FILE	SHEET
06-13-00	1	-----	-----	BAZ11299	E02

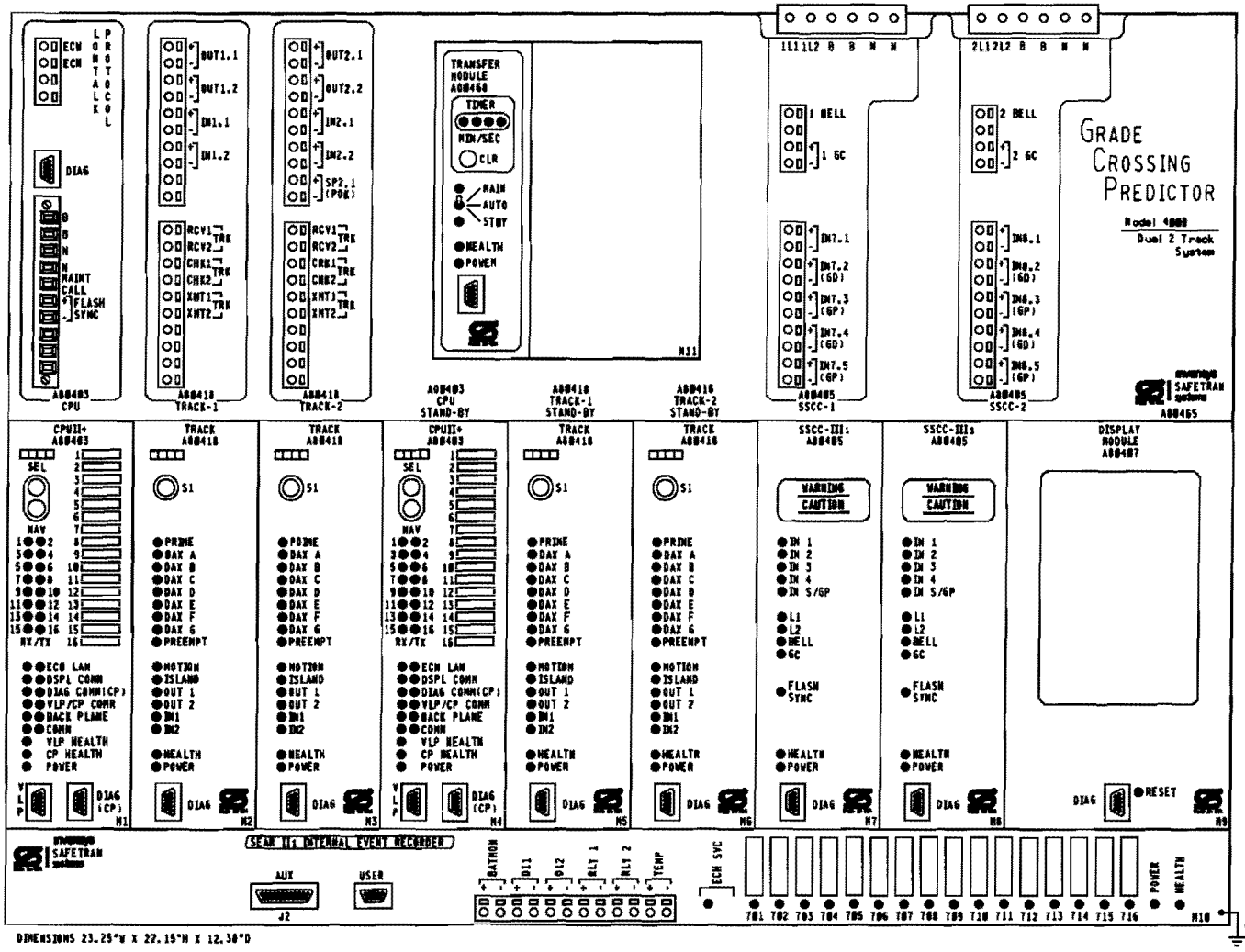

GCP 4000 APPLICATION NOTES:

1. THE GRADE CROSSING PREDICTOR (GCP) IS A MODULAR MICROPROCESSOR CONTROLLED SYSTEM THAT IS DEPLOYED TO CONTINUALLY MONITOR THE APPROACHES TO RAILROAD GRADE CROSSINGS AND TO CONTROL THE LAMPS, GATES AND BELLS ASSOCIATED WITH THOSE CROSSINGS. WHEN EQUIPPED WITH THE SEAR II± MODULE THE GCP 4000 WILL RECORD EVENTS AND REPORT ALARMS WHEN CONNECTED TO AN OFFICE SYSTEM.

2. THE GCP 4000 GCP (A80465) IS A TWO TRACK REDUNDANT UNIT CAPABLE OF DRIVING 4 INDEPENDENT FLASHER AND GATE SIGNALS AND RECORDING EVENTS AND REPORTING ALARMS. THE STANDARD A80465 INCLUDES THE FOLLOWING MODULES:

SLOT	MODULE	FUNCTION	PART NO.
M1	CPU-II+	MAIN	A80403
M2	TRACK-1	MAIN	A80418
M3	TRACK-2	MAIN	A80418
M4	CPU-II+	STANDBY	A80403
M5	TRACK-1	STANDBY	A80418
M6	TRACK-2	STANDBY	A80418
M7	SSCC-III±	A SIGNAL	A80405
M8	SSCC-III±	B SIGNAL	A80405
M9	DISPLAY MODULE		A80407
TOP CENTER	TRANSFER UNIT		A80460
LOWER BAY	SEAR II±	RECORDER	A80418
OPTIONAL MODULES,			A80413
RIO MODULE			

3. EACH TRACK MODULE HAS TWO PROGRAMMABLE INPUTS AND TWO PROGRAMMABLE OUTPUTS.

4. THE SEAR II± INTERNAL EVENT RECORDER HAS INPUTS FOR ONE BATTERY MONITOR, TWO NON-VITAL INPUTS AND TWO PROGRAMMABLE RELAY DRIVES (BELL/FRONT).

5. LOCATED ON THE FRONT OF EACH MODULE THERE ARE LED LIGHTS TO INDICATE THE ACTIVITY OF CERTAIN FUNCTIONS OCCURRING INSIDE THE GCP.

6. BETWEEN SLOT 1 & 2 THERE IS A CHASSIS INDENTIFICATION CHIP (CIC) SOCKET AND AN ECD CONNECTOR (DB-25 FEMALE).

7. UPON THE FAILURE OF A MODULE IN SLOTS M1-M3 THE AUTOMATIC TRANSFER UNIT SWITCHES TO THE STANDBY MODULES IN SLOTS M4-M6.

NEW WORK

SAFETRAN SYSTEMS

PROJECT #: IL2000019
DES/CHKD BY: DPL/SWS
DATE: 06-13-00

CSX TRANSPORTATION

RAIL TRANSPORT GROUP ENGINEERING
COMMUNICATIONS AND SIGNALS

WOODLAND JUNCTION TO RB JUNCTION

SHADE RAG NO. 353604F

DETECTION DEVICE CONSIST CWE-99

ALVIN, IL N.P. BZA-112.99

4K-CHASSIS.DGN
REV. 12-22-06

DESIGNED	DIGITIZED	CHECKED	DATE
SAF/DPL	SAF/DPL	SAF/SWS	06-13-00

DESIGN DATE	REV. NO.	DRAWING	SHEET NO	FILE	SHEET
06-13-00	1	-----	-----	BAZII299	CBI

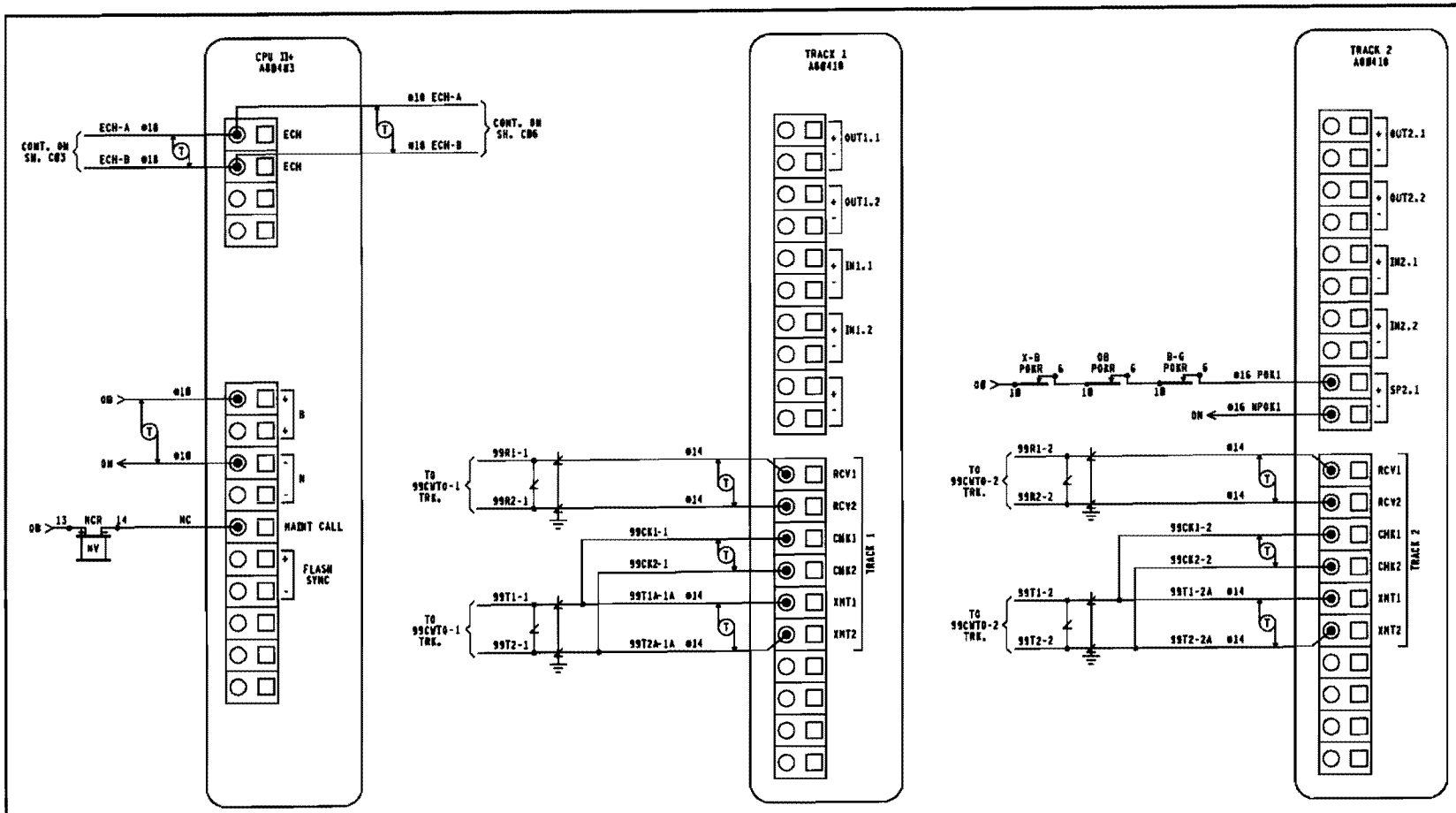

NOTE:

ECHELON CONNECTIONS NOT TO EXCEED 53' IN LENGTH AND TOTAL LENGTH COMBINED NOT TO EXCEED 430' WITH A MAXIMUM OF 0 NODES. RECOMMEND USE BELDEN WIRE CABLE #0461 OR EQUIVALENT.

NEW WORK

SAFETRAN systems

PROJECT #: IL2000019
DES/CHKD BY: DPL/SWS
DATE: 06-13-00

CSX TRANSPORTATION

RAIL TRANSPORT GROUP ENGINEERING
COMMUNICATIONS AND SIGNALS

WOODLAND JUNCTION TO RB JUNCTION

SHAKE RAG NO. 353604F

DETECTION CIRCUITRY CWE-99

ALVIN, IL N.P. 02A-112.99

4K-TERMINALS.DGN
REV. 02-29-00

DESIGNED	DIGITIZED	CHECKED	DATE
SAF/DPL	SAF/DPL	SAF/SWS	06-13-00

DESIGN DATE	REV. NO.	DRAWING	SHEET NO	FILE	SHEET
06-13-00	1	-----	-----	0AZ11299	C02

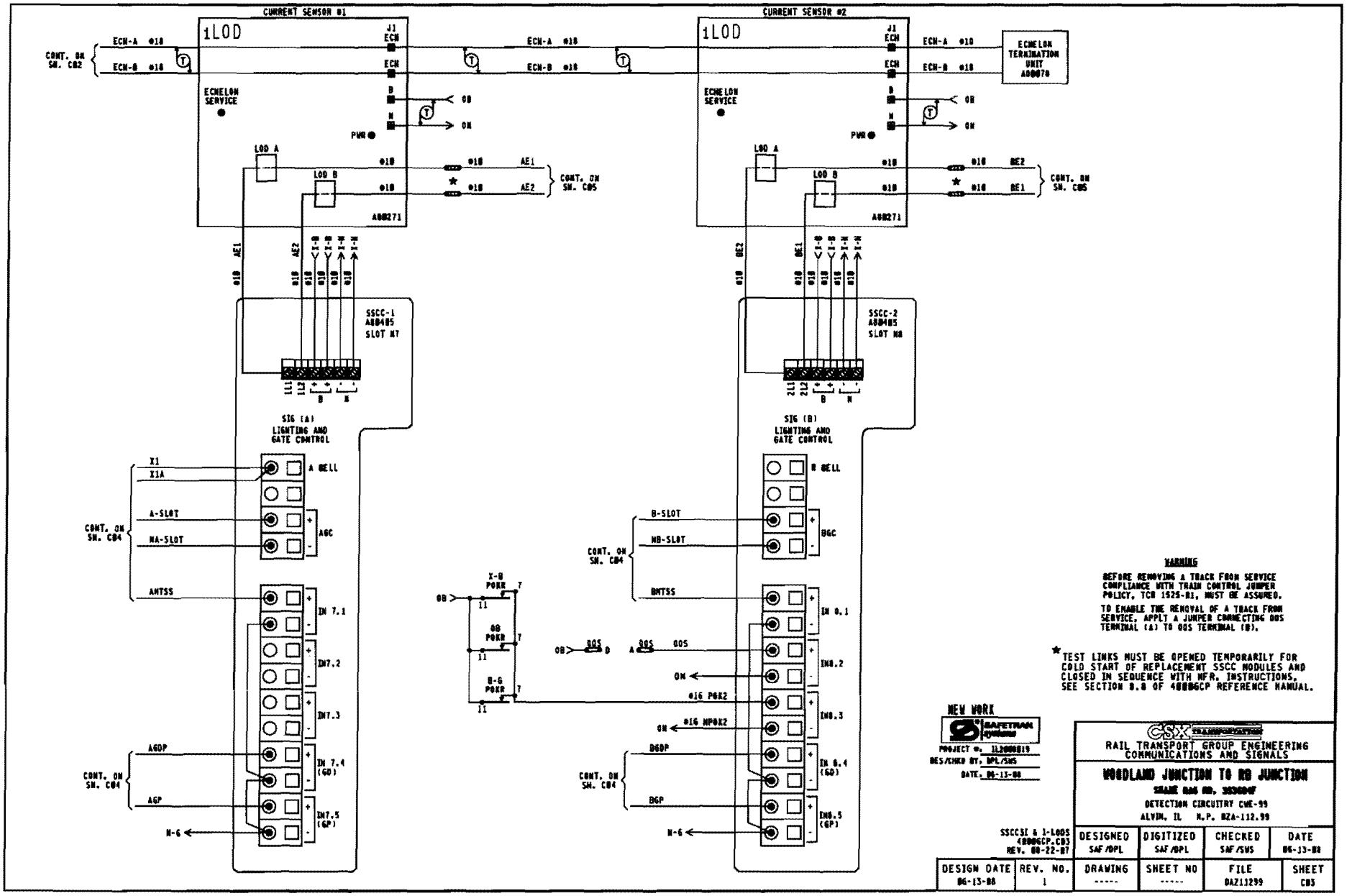

WARNING

BEFORE REMOVING A TRACK FROM SERVICE COMPLIANCE WITH TRAIN CONTROL JUMPER POLICY, TCR 1525-01, MUST BE ASSURED.

TO ENABLE THE REMOVAL OF A TRACK FROM SERVICE, APPLY A JUMPER CONNECTING 005 TERMINAL (A) TO 005 TERMINAL (B).

★ TEST LINKS MUST BE OPENED TEMPORARILY FOR COLD START OF REPLACEMENT SSCC MODULES AND CLOSED IN SEQUENCE WITH MFR. INSTRUCTIONS. SEE SECTION 8.8 OF 40006CP REFERENCE MANUAL.

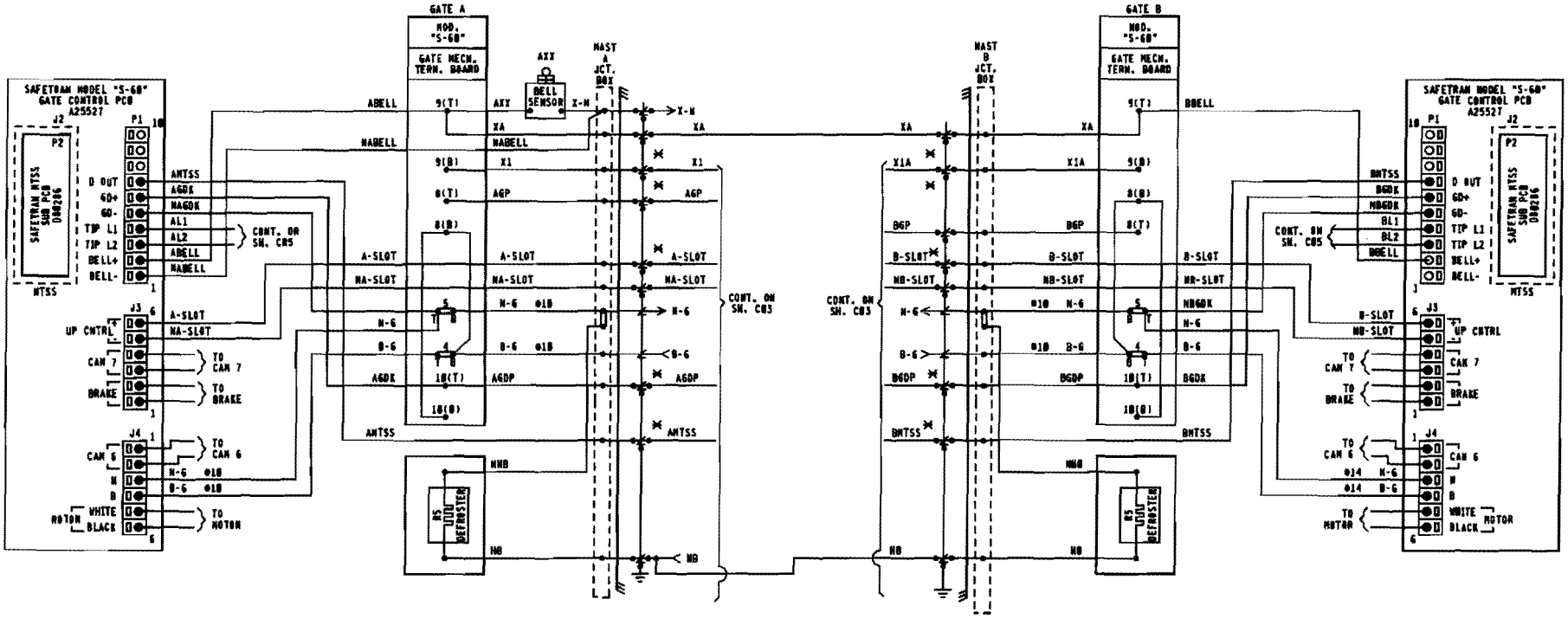

NOTES:
1. ✕ = TEST LINKS MUST BE OPEN TEMPORARILY FOR COLD START OF REPLACEMENT SSCC MODULES AND AND CLOSED IN SEQUENCE WITH MFR. INSTRUCTIONS. SEE SECTION 8.0 OF 4000GCP REFERENCE MANUAL.
2. = TERMINAL IN JCT. BOX BASE
3. ALL WIRING #16 UNLESS NOTED OTHERWISE.

NEW WORK

SAFETRAN systems

PROJECT #: IL2006839
DES/CHKD BY: DPL/SWS
DATE: 06-13-00

CSX TRANSPORTATION
RAIL TRANSPORT GROUP ENGINEERING
COMMUNICATIONS AND SIGNALS

WOODLAND JUNCTION TO RB JUNCTION

SHAKE BAG NO. 353604F

CROSSING WARNING DEVICE GATE CIRCUITRY

ALVIN, IL M.P. BZA-112.99

S60 GATE WIRING.C04A
REV 09-05-07

DESIGN DATE	REV. NO.	DRAWING	SHEET NO	FILE	SHEET
06-13-00	1	-----	-----	0AZ11299	C04

DESIGNED	DIGITIZED	CHECKED	DATE
SAF/DPL	SAF/DPL	SAF/SWS	06-13-00

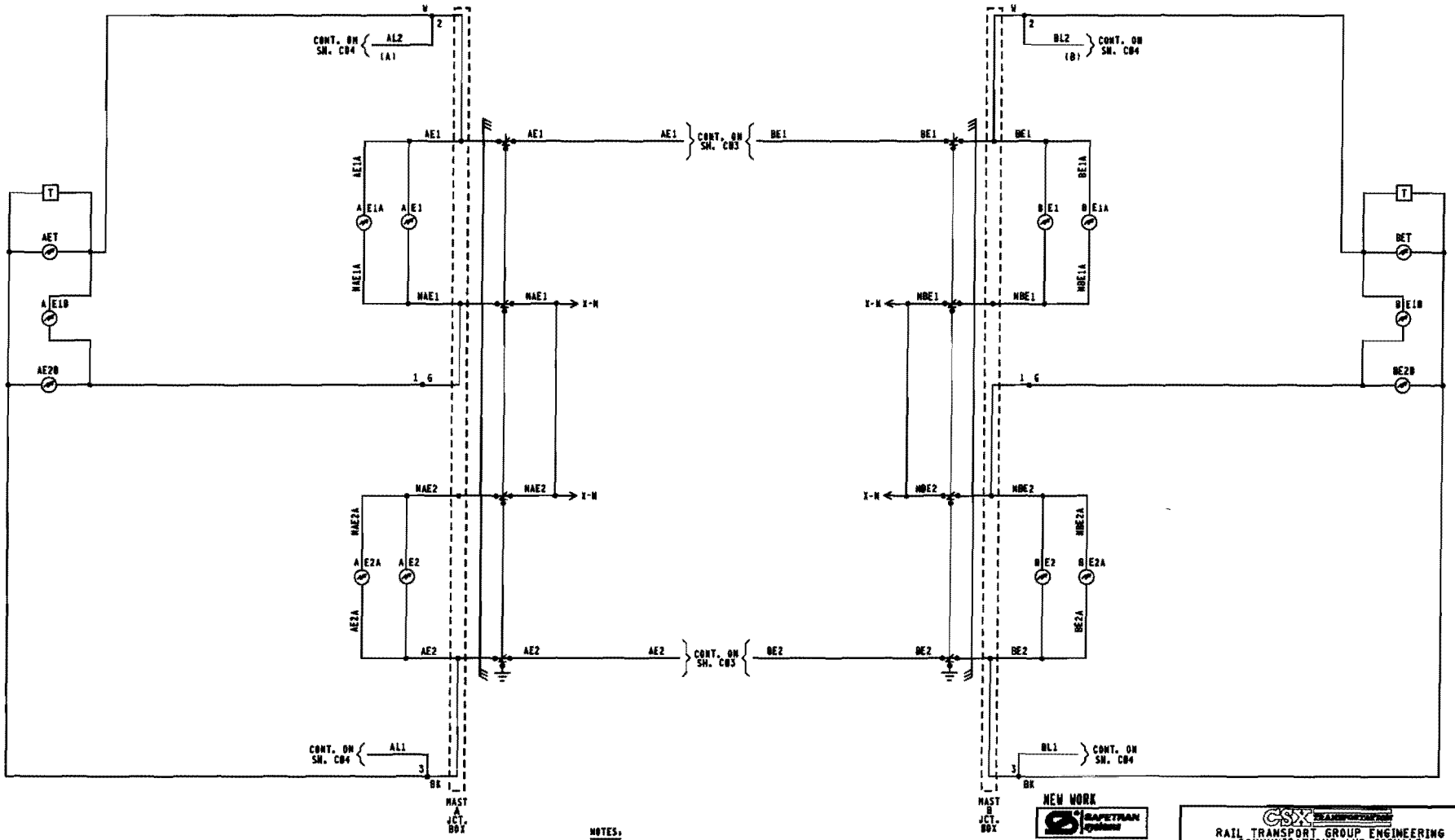

NOTES:

1. [ ] = TERMINAL IN JUNCTION BOX
2. WHEN Y OR HOME LIGHTS ON A SINGLE STRUCTURE REFER TO SS102 FOR REQUIRED ARRESTERING
3. FEEDS TO ALL BUSSES AND LIGHT CIRCUITS ARE #10 FLEX
4. UNLESS NOTED ALL OTHER WIRING #16
5. CABLING SPECIFICATIONS SHOWN ON SH. S01
6. [T] = TIP SENSOR

NEW WORK

SAFETRAN Systems

PROJECT #: DL2000819
DES/CHKD BY: SPL/SWS
DATE: 06-13-00

CSX TRANSPORTATION

RAIL TRANSPORT GROUP ENGINEERING
COMMUNICATIONS AND SIGNALS

WOODLAND JUNCTION TO RB JUNCTION

SHADE BAR NO. 353604F

CROSSING WARNING DEVICE LIGHT CIRCUITRY

ALVIN, IL N.P. BZA-112.99

4K-LAMP WIRING.DGN
REV. 02-29-08

DESIGNED	DIGITIZED	CHECKED	DATE
SAF/DPL	SAF/DPL	SAF/SWS	06-13-00

DESIGN DATE	REV. NO.	DRAWING	SHEET NO	FILE	SHEET
06-13-00	1	-----	-----	BAZ11299	C05

WAYSIDE ACCESS GATEWAY CONFIGURATION	
SITE ATCS ADDRESS	7.125.472.828.87.81 7.125.LLL.666.SS.DD
SERIAL INTERFACE	38,400,NONE,8,1/NOFLOW
SERIAL FORMAT	RAW
WAG TEST MODE	DISABLED
ECHELON ADDRESS	81.07
UDP PORTS	5000, 5001, 5002, 5003
ROUTE TABLE EXPIRY	5400 SEC
BROADCAST MEDIUM	IP ETHERNET
TCP PORTS	23, 10023, 6001, 6002
DHCP SERVER	DISABLED
IP ADDRESS	192.168.13.1
TYPE 7 ROUTE LENGTH	12--7RRLLLGGGSS
IP NETWORK MASK	255.255.255.0
WAG CIRCUIT ID	DISABLE
ROUTING REGION DOMAIN 1	OC6SERVER1.JAX.COM
ATCS SERVER UDP PORT NUMBER	6001
TELNET NUMBERS	WAG 6002, SERIAL 10023
DEFAULT GATEWAY IP	192.168.013.031

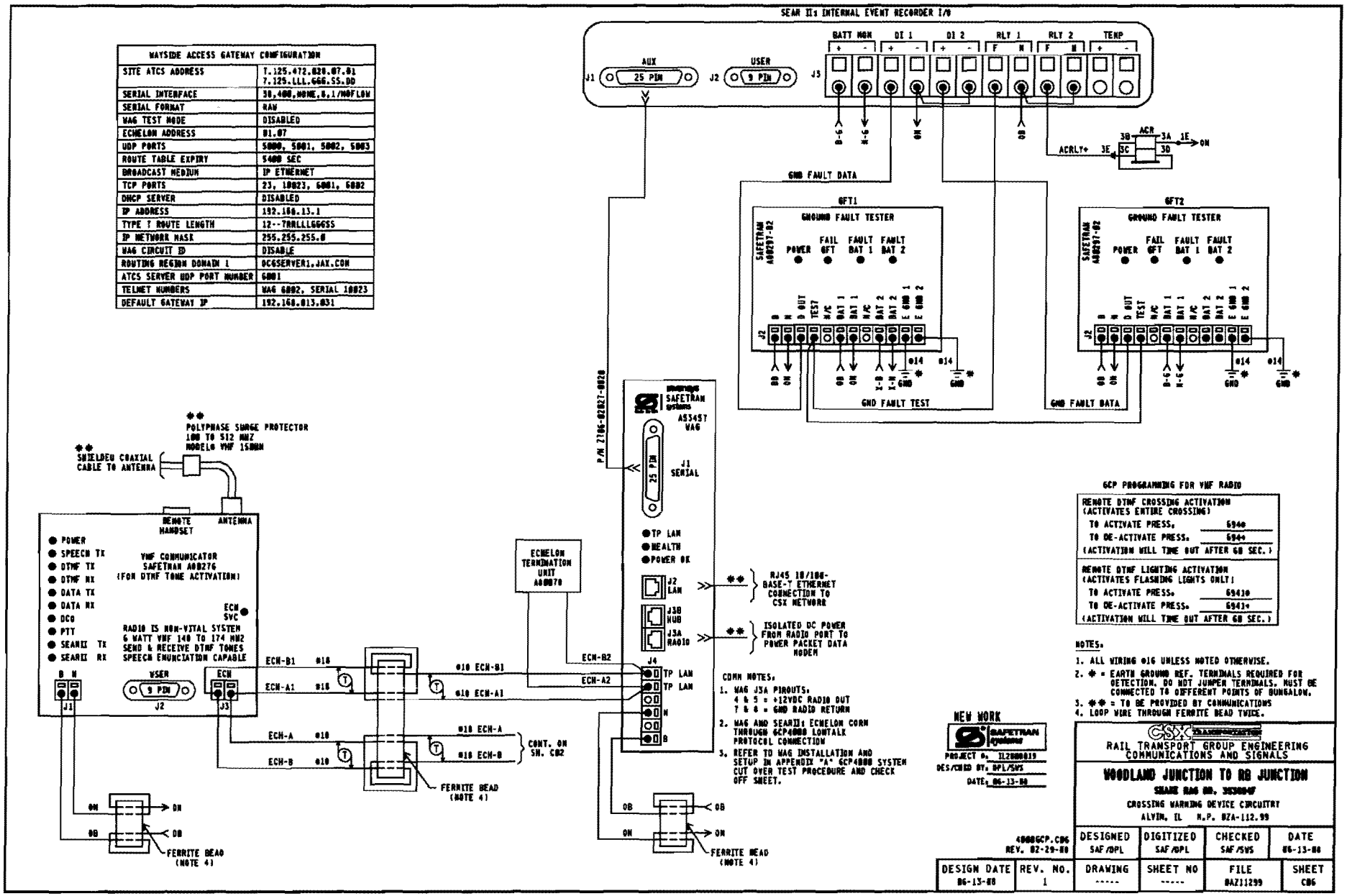

	DEFAULTS AND/OR STYLE	FIELD RECORD
SEAR II: EXECUTIVE PROGRAM	VERSION: 9V725A01	VERSION: _____
APPLICATION PROGRAM (IF LOADED)	VERSION: 9V864A01	VERSION: _____

NOTE TO INSPECTOR: AT IN SERVICE OF SEAR II: OR UPDATE OF ITS INTERNAL EXECUTIVE PROGRAM OR ITS CSXT APPLICATION PROGRAM, THE VERSION NUMBER OF EACH PROGRAM MUST BE INSERTED IN THE BLANK FIELDS.

SITE SET UP PROCEDURE	
FUNCTION	LED DISPLAY
DATE/TIME	XX-XX-XXXX XXWXXWXX
AUTOMATIC DST ADJUSTMENT	YES
TIME ZONE	EASTERN
SITE NAME	SNAKE RAG RD.
MILEPOST	BZA-112.99
DOT NUMBER	353694F
TESTER TYPE	CROSSING
DATE FORMAT	MM-DD-YYYY
TEMP FORMAT	FAHRENHEIT
INDICATE HOLD (SEC)	0
SITE TYPE	COLLECTOR
SITE ATCS ADDRESS	7.125.472.020.99.01 (7.RRR.LLL.666.99.01)
POLL ID	1
OFFICE ADDRESS	2.125.00.0000 (2.RRR.MM.DDDD)
FIELD COMM. DEVICE	VHF COMM. (ECHELON)
MODE	GEN/ATCS
WAMS XID	ENABLED
OFFICE COMM. DEVICE	WAG (ECHELON)
USER PORT BAUD	9600
USER PORT DATA BITS	8
USER PORT PARITY	NONE
USER PORT STOP BITS	1
USER PORT FLOW CONTROL	NONE
AUX PORT BAUD	38,400
AUX PORT DATA BITS	8
AUX PORT PARITY	NONE
AUX PORT STOP BITS	1
AUX PORT FLOW CONTROL	NONE
COMM PORT BAUD	9600
COMM PORT DATA BITS	8
COMM PORT PARITY	NONE
COMM PORT STOP BITS	1
COMM PORT FLOW CONTROL	NONE

INSPECTOR NOTE: CURRENT VALUES MAY VARY DEPENDANT ON FIELD CONDITIONS. MAKE UP PER ACTUAL READINGS FOR IN-SERVICE REVISION.

LIT BULB COUNT ON EACH CIRCUIT	NO.	TYPE OF BULB	CURRENT READING IN AMP. AT APPROX. 18.0 V ARRAY VOLTAGE
CURRENT SENSOR (1) AE1, LAMP SET UP	4	☐BULBS ■LED	4.0
CURRENT SENSOR (1) AE2, LAMP SET UP	4	☐BULBS ■LED	4.0
CURRENT SENSOR (2) BE1, LAMP SET UP	4	☐BULBS ■LED	4.0
CURRENT SENSOR (2) BE2, LAMP SET UP	4	☐BULBS ■LED	4.0

VHF RADIO CHANNELS			
1	161.130	5	161.550
2	160.710	6	160.785
3	160.560	7	160.785
4	160.860	8	160.785

NOTE 9

MENU → CONFIGURATION	
MODULE TYPE	WAG
MODULE NAME	DEFAULT
WAG ECHELON MODE	7

MEASURE BATTERY VOLTAGE AT INPUT		
BATTERY VOLTAGE	GB	_____ VOLTS
BATTERY VOLTAGE	X-B	_____ VOLTS
BATTERY VOLTAGE	B-G	_____ VOLTS

NOTE.
REFER TO WAG INSTALLATION AND SETUP IN APPENDIX "A" GCP4000 SYTEM CUT OVER, TESY PROCEDURE AND CHECK OFF SHEET.

CONTROL SYSTEM CONFIGURATION MENU QUESTIONS		
	OPTION	SELECTION
NOTE 1	RESET NAMES AND MODULES*	YES ☐ NO ☐
	RAILROAD NUMBER	125
	ENTRANCE GATES*	0 ☐ 1 ☐ 2 ■ 3 ☐ 4 ☐ 5 ☐ 6 ☐ 7 ☐ 8 ☐
NOTE 2	EXIT GATES*	0 ■ 1 ☐ 2 ☐ 3 ☐ 4 ☐
	GATE POSITION FAIL*	20 SECS.
	BATTERY BANKS*	1 ☐ 2 ■ 3 ☐
	BATT NOW USED*	NO ☐ YES ■
	INTERNAL CROSSING CONTROLLERS*	0 ☐ 1 ☐ 2 ■
	EXTERNAL CROSSING CONTROLLERS*	0 ■ 1 ☐ 2 ☐
	VHF COMMUNICATOR*	YES ■ NO ☐
NOTE 3	ACTIVATION CODE	694
	ACTIVATION TIMEOUT	(60 SEC)
	iLOD MODULES*	0 ☐ 1 ☐ 2 ■ 3 ☐ 4 ☐
NOTE 4	ANY LED BULBS USED*	NO ☐ YES ■
	AUTO INSPECTIONS*	YES ■ NO ☐
NOTE 5	BELL SENSOR*	0 ☐ 1 ■ 2 ☐ 3 ☐ 4 ☐
	BELL SENSOR TSS 1*	NO ☐ YES ■
	BELL SENSOR TSS 2*	NO ■ YES ☐
	BELL SENSOR TSS 3*	NO ■ YES ☐
	BELL SENSOR TSS 4*	NO ■ YES ☐
	BELL SENSOR TSS 5*	NO ■ YES ☐
	BELL SENSOR TSS 6*	NO ■ YES ☐
	BELL SENSOR TSS 7*	NO ■ YES ☐
	BELL SENSOR TSS 8*	NO ■ YES ☐
	BELL ON*	GATES LOWERING ■ GATES MOVING ☐ ALWAYS ☐
	GFT'S	YES ■ NO ☐
	BATTERIES ON GFT1	1 ☐ 2 ■
NOTE 6	GATE TIP SENSORS*	YES ■ NO ☐
	RTU	NO ■ YES ☐
NOTE 7	VHF VOICE CHANNEL	1 ☐ 2 ☐ 3 ☐ 4 ☐ 5 ☐ 6 ☐ 7 ☐ 8 ☐
	DATA CHANNEL	1 ☐ 2 ☐ 3 ☐ 4 ☐ 5 ☐ 6 ☐ 7 ☐ 8 ☐
	FULL APPROACH MOVE ALARMS*	ACTIVATED ■ DO NOT ACTIVATE ☐

NOTE 8

EDIT DIGITAL INPUTS	■ NO	☐ YES
EDIT BATTERIES	■ NO	☐ YES
EDIT RELAYS	■ NO	☐ YES
EDIT INDICATOR LEDS	■ NO	☐ YES
EDIT TEST LED'S	■ NO	☐ YES
EDIT ILOD SENSOR	■ NO	☐ YES
EDIT VHF SETTINGS	■ NO	☐ YES

NOTES.

1. SELECT YES ON INITIAL SET-UP.
2. OPTION AVAILABLE IF GATES = YES
3. OPTION AVAILABLE IF VHF COMMUNICATOR = YES LAST 3 DIGITS OF DOT NUMBER.
4. OPTION AVAILABLE IF iLODS.
5. OPTION AVAILABLE IF BELL SENSORS.
6. OPTION AVAILABLE IF GATES.
7. OPTION AVAILABLE IF VHF RADIO.
8. ONLY YES IN SPECIAL CIRCUMSTANCES.
9. SELECT "MENU" THEN "CONFIGURATION" FROM SEAR II INTERFACE KEYPAD TO ACCESS MODULE CONFIGURATION MENU.

NEW YORK
SAFETRAN Systems
PROJECT #: IL2000019
DES/CHKD BY: DPL/SWS
DATE: 06-13-00

= NOTE

4000GCP.C07
REV. 10-26-06

CSX TRANSPORTATION
RAIL TRANSPORT GROUP ENGINEERING
COMMUNICATIONS AND SIGNALS

WOODLAND JUNCTION TO RB JUNCTION

SNAKE RAG RD. 353694F

SEAR II: CONFIGURATION & FUNCTIONS

ALVIN, IL M.P. BZA-112.99

DESIGNED	DIGITIZED	CHECKED	DATE
SAF/DPL	SAF/DPL	SAF/SWS	06-13-00

DESIGN DATE	REV. NO.	DRAWING	SHEET NO	FILE	SHEET
06-13-00	1	-----	-----	BAZ11299	C07

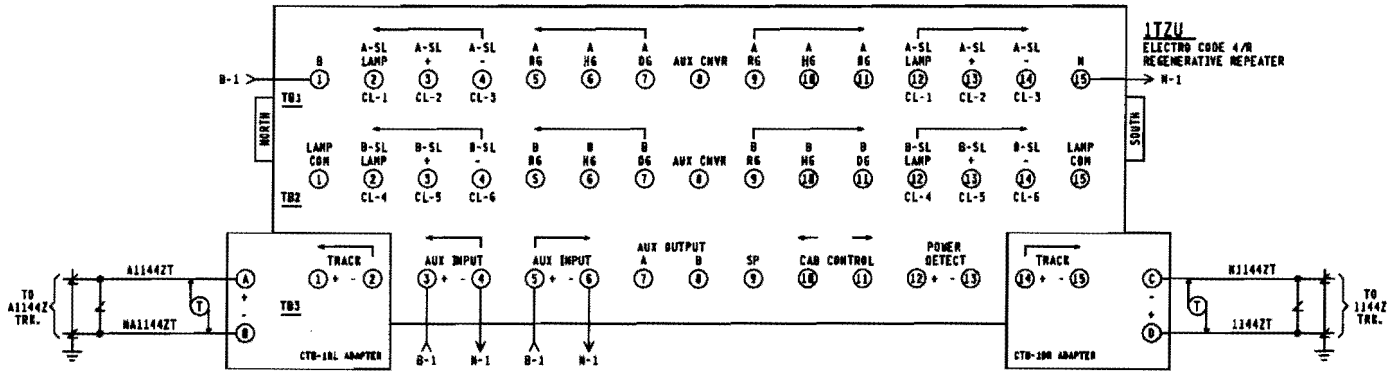

1TZU

FRONT VIEW

ELECTRO CODE 4/R
REGENERATIVE REPEATER
CONFIGURATION "R"

7K TRACK RECEIVER
2R REGULATED TRACK CONVERTER
214 FILTER
215D AUXILIARY I/O (B)
216 DISPLAY MODULE
220A PROCESSOR
220D PROCESSOR
2R REGULATED TRACK CONVERTER
7K TRACK RECEIVER

CHASSIS
L.O. 86

JUMPERS

EXE. NAME EC40
U2 97ADE U4 8C994
APPL. NAME RRRO
REV. NO. E
CS. U1 & U3 98791

NEW SHEET

SAFETRAN SYSTEMS

PROJECT #: IL2000019
DES/CHKD BY: DPL/SWS
DATE: 06-13-00

40006CP.PB1
REV. 01-28-00

CSX TRANSPORTATION

RAIL TRANSPORT GROUP ENGINEERING
COMMUNICATIONS AND SIGNALS

WOODLAND JUNCTION TO RB JUNCTION

ELECTROCODE REPEATER HOUSE

CIRCUITS

ALVIN, IL N.P. NZA-113.83

DESIGNED	DIGITIZED	CHECKED	DATE
SAF/DPL	SAF/DPL	SAF/SWS	06-13-00

DESIGN DATE	REV. NO.	DRAWING	SHEET NO	FILE	SHEET
06-13-00	1	-----	-----	0AZ11299	C00

Minimum Program Steps Report

Location and SIN

DOT Number: 353694F
Milepost Number: 0za-112.99
Site Name: SHAKE RAG RD

SIN: 712547202816 *

* Parameter is part of office check number calculation.

MCF and Template Selection

MCF Name: GCP-T6X-01-2.mcf
MCF Revision: 012
MCFCRC: 0DFE7A0C

Template = 2A,4 Bi, 2 Rem *

* Parameter is part of office check number calculation.

Minimum Program Steps

TEMPLATE: track 1-Bi, Island
Track 1 : GCP Frequency = 285 Hz
Track 1 : Approach Distance = 2824 ft (See Plans)
Track 1 : Prime Warning Time = 25 sec *
Track 1 : GCP Transmit Level = High (Set in Field)
Track 1 : Isl Frequency = 4.9 kHz

TEMPLATE: track 2-Remote Prime
Track 2 : GCP Frequency = 285 Hz
Track 2 : Approach Distance = 2703 ft (See Plans)
Track 2 : Prime Warning Time = 25 sec *
Track 2 : Prime Offset Distance = 121 ft (Verify in Field)
Track 2 : GCP Transmit Level = High (Set in Field)
Track 2 : Uni/Bi/Sim-Bidirnl = Sim. Bidirnl *

TEMPLATE: SSCC
SSCC-1 Number of GDs = 1 *
SSCC-2 Number of GPs = 1 *
SSCC-2 Number of GDs = 1 *

TEMPLATE: IP assignment SSCC
IN 7.2 = Not Used *
IN 8.2 = Out Of Service IP 1 *
IN 8.4 = GD 2.1 *
IN 8.5 = GP 2.1 *

TEMPLATE: SEAR
SP 3.1 = Not Used *

GCP: track 1
Track 1 : Uni/Bi/Sim-Bidirnl = Sim. Bidirnl *
Track 1 : Island Distance = 120 ft *

ADVANCED: out of service
OOS Control = Display+OOS IPs *

ADVANCED: out of service 2
T2 OOS Control = OOS Input 1 *

ADVANCED: site options
Daylight Savings = On *

SSCC: 1
SSCC-1 Gate Delay = 5 sec *
SSCC 1 : Flash Rate = 55 *
SSCC 1 : Lamp Neutral Test = Off *

SSCC: 2
SSCC-2 Gate Delay = 5 sec *
SSCC 2 : Flash Rate = 55 *
SSCC 2 : Lamp Neutral Test = Off *

SEAR
DI 1 = Gnd Flt Tester 1 *
DI 2 = Gnd Flt Tester 2 *
Rly 1 = Ground Fault Test *
Rly 2 = AC Control *

SEAR: slot 7-8 inputs
IN 7.1 = TSS 1 *
IN 8.1 = TSS 2 *
IN 8.3 = POK 2 *

* Parameter is part of office check number calculation.

Check Numbers

Office Check No. (DT 4.6.0): 6A3CE784
Office Check Number: 6A3CE784
Config. Check Number: 51A05D68
(Based on MCF Revision 012)

Parameters not part of office check number calculation.

Track 1 : GCP Frequency = 285 Hz
Track 1 : Approach Distance = 2824 ft (See Plans)
Track 1 : GCP Transmit Level = High (Set in Field)
Track 1 : Isl Frequency = 4.9 kHz
Track 2 : GCP Frequency = 285 Hz
Track 2 : Approach Distance = 2703 ft (See Plans)
Track 2 : Prime Offset Distance = 121 ft (Verify in Field)
Track 2 : GCP Transmit Level = High (Set in Field)

NEW YORK
SAFETRAN systems
PROJECT #: IL2000019
DES/CHKD BY: DPL/SWS
DATE: 06-13-00

CSX TRANSPORTATION
RAIL TRANSPORT GROUP ENGINEERING
COMMUNICATIONS AND SIGNALS

WOODLAND JUNCTION TO RD JUNCTION
SHAKE RAG RD. 353694F
MINIMUM PROGRAM STEPS REPORT CWE-99
ALVIN, IL M.P. 0ZA-112.99

DESIGNED	DIGITIZED	CHECKED	DATE
SAF/DPL	SAF/DPL	SAF/SWS	06-13-00

DESIGN DATE	REV. NO.	DRAWING	SHEET NO	FILE	SHEET
06-13-00	1	-----	-----	0AZ11299	P01

40006CP.P01
REV. 01-28-00

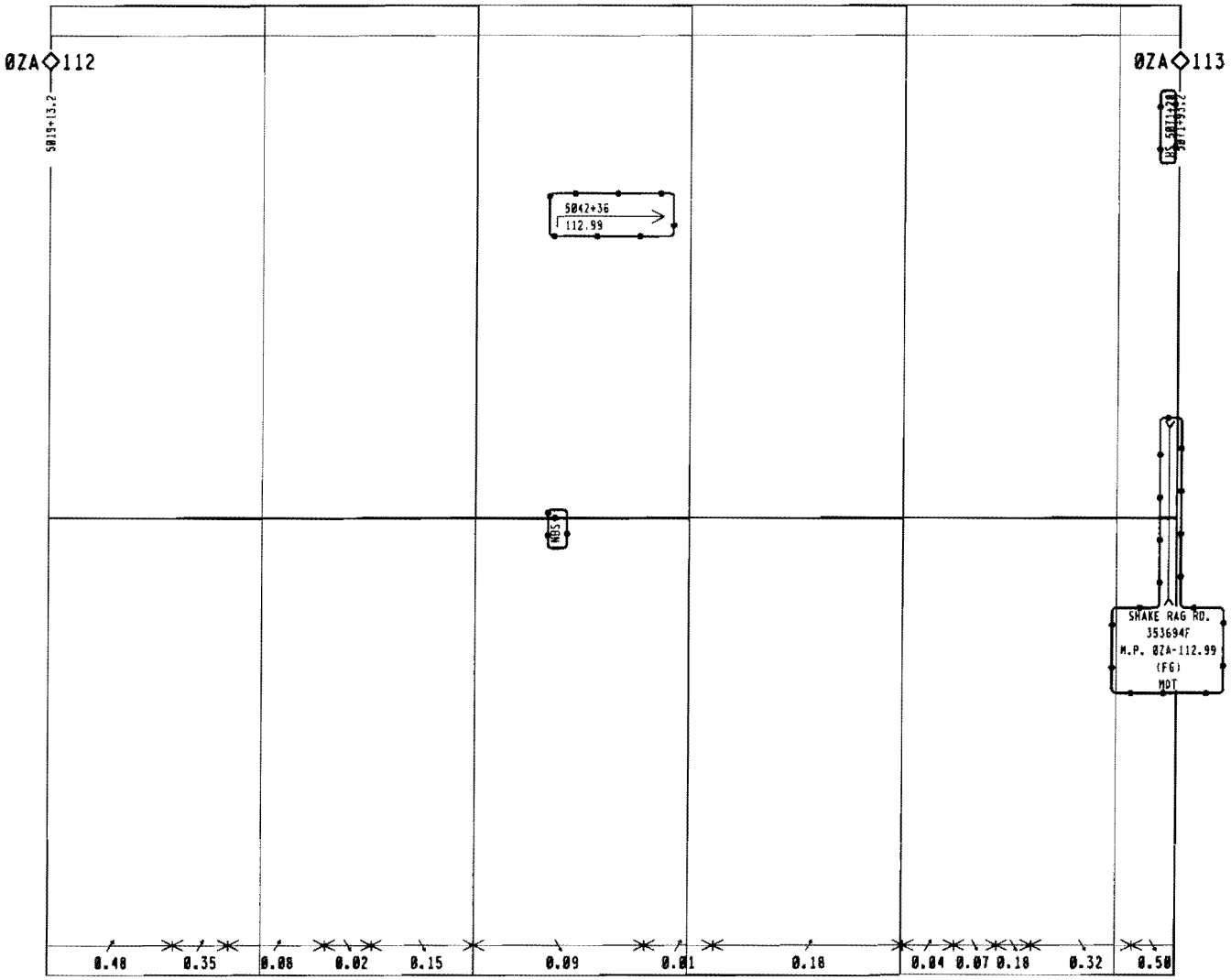

F-17183	3	4	HORIZONTAL SCALE : 1 INCH = 500 FEET	M.P. 0ZA-112 TO 0ZA-113 TRACK PLAN YARD CENTER TO NORTH INGLE	CSX RAIL TRANSPORT GROUP ENGINEERING COMMUNICATIONS AND SIGNALS
				DESIGNED URS/RLV · DRAFTED URS/RLV · CHECKED URS/CAM · DATE 09-12-94	NEXT FILE 0ZA11400 · NEXT SH T01 · FILE 0ZA11300 · SHEET T01

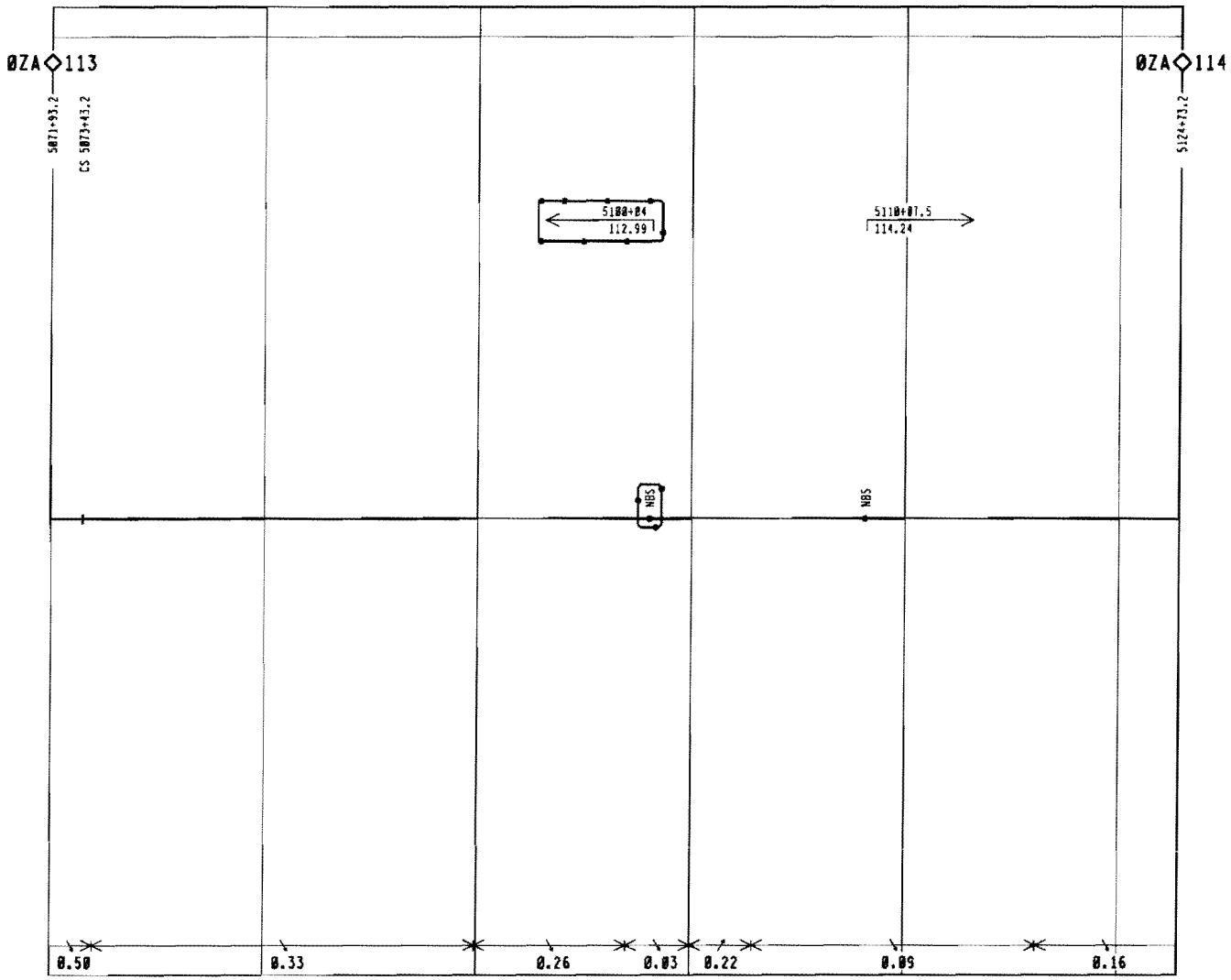

HORIZONTAL SCALE :

1 INCH = 500 FEET

N.P. 0ZA-113 TO 0ZA-114
TRACK PLAN
YARD CENTER TO NB JUNCTION

DESIGNED	DRAFTED	CHECKED	DATE	NEXT FILE	NEXT SHT	FILE	SHEET
DRS/MLV	DRS/MLV	DRS/CAN	09-12-94	0ZA11500	T01	0ZA11400	T01

RAIL TRANSPORT GROUP ENGINEERING
COMMUNICATIONS AND SIGNALS

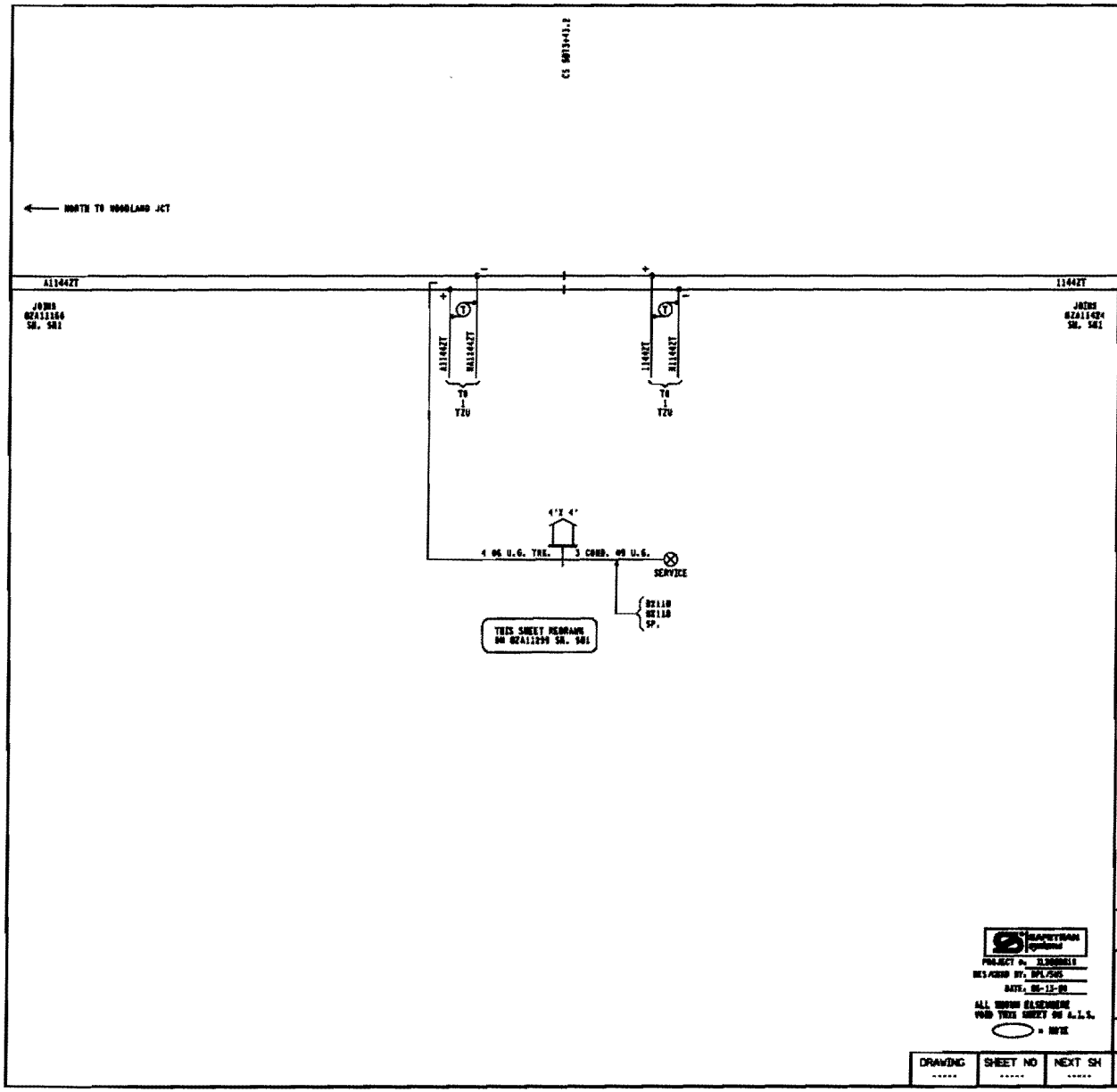

REVISIONS	
04-09-2001 SWE	IL1994048
11-30-06 IRS IL2004016	
02-15-08 SWE	IL2006012

CSX

RAIL TRANSPORT GROUP ENGINEERING
COMMUNICATIONS AND SIGNALS

WOODLAND JCT TO RR JUNCTION

TRACK PLAN

ALVIN, IL N.P. 0ZA-113.03

DESIGNED	DIGITIZED	CHECKED	DATE
SWE	SWE	SWE	06-20-96

DRAWING	SHEET NO	NEXT SH	NEXT FILE	NEXT SH	FILE	SHEET
-----	-----	-----	0ZA11303	E01	0ZA11303	SH1

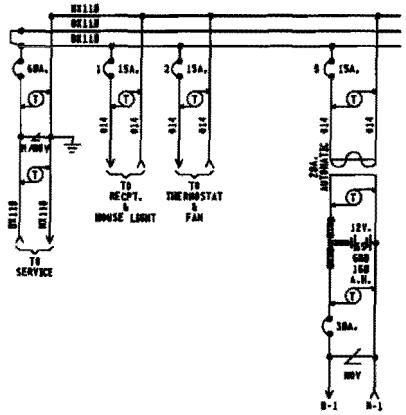
HX110
HX110
HX110
60A.
1
15A.
2
15A.
3
15A.
#14
#14
#14
#14
#14
#14
T
T
T

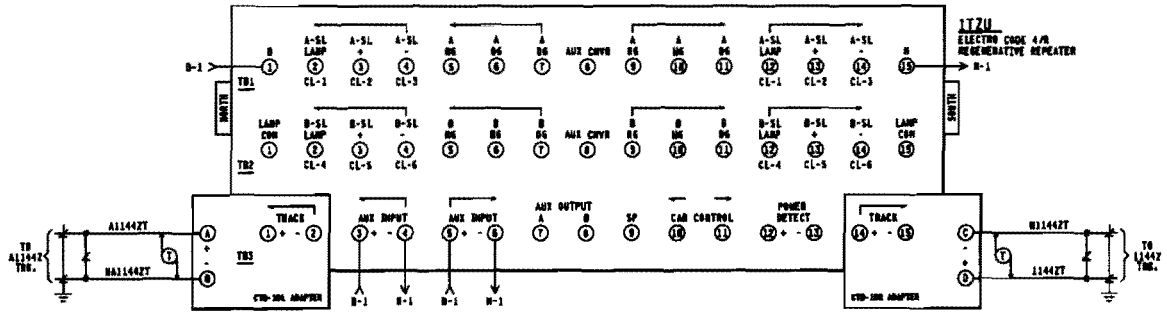

THIS SHEET REDRAWN
FR BZA11299 SH. C08

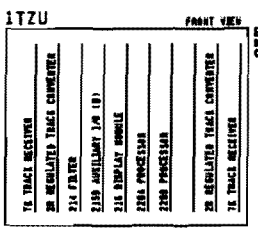

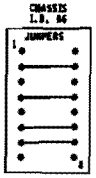

EXE. NAME EC40
U2 VFAME U4 UC394
APPL. NAME RR8A
REV. NO. E
CS. U1 & U3 00731

PROJECT No. IL2006610
DES/CHKD BY: RPL/SHS
DATE: 06-13-00
ALL SHOWN ELSEWHERE
WITH THIS SHEET ON A.L.S.
= NOVE

REVISIONS		
04-09-2001 SHE	IL1004040	
11-30-00 HRS IL2004816		
02-19-00 SHE	IL2000612	

CSX Transportation
RAIL TRANSPORT GROUP ENGINEERING
COMMUNICATIONS AND SIGNALS

WOODLAND JCT TO RB JUNCTION

REGL. OPERATOR
CIRCUITS
ALVIN, IL M.P. BZA-113.03

DESIGNED	DIGITIZED	CHECKED	DATE
SHE	SHE*	SHE	06-20-96

DRAWING	SHEET NO	NEXT SH	NEXT FILE	NEXT SH	FILE	SHEET
-----	-----	-----	-----	-----	BZA11303	C01