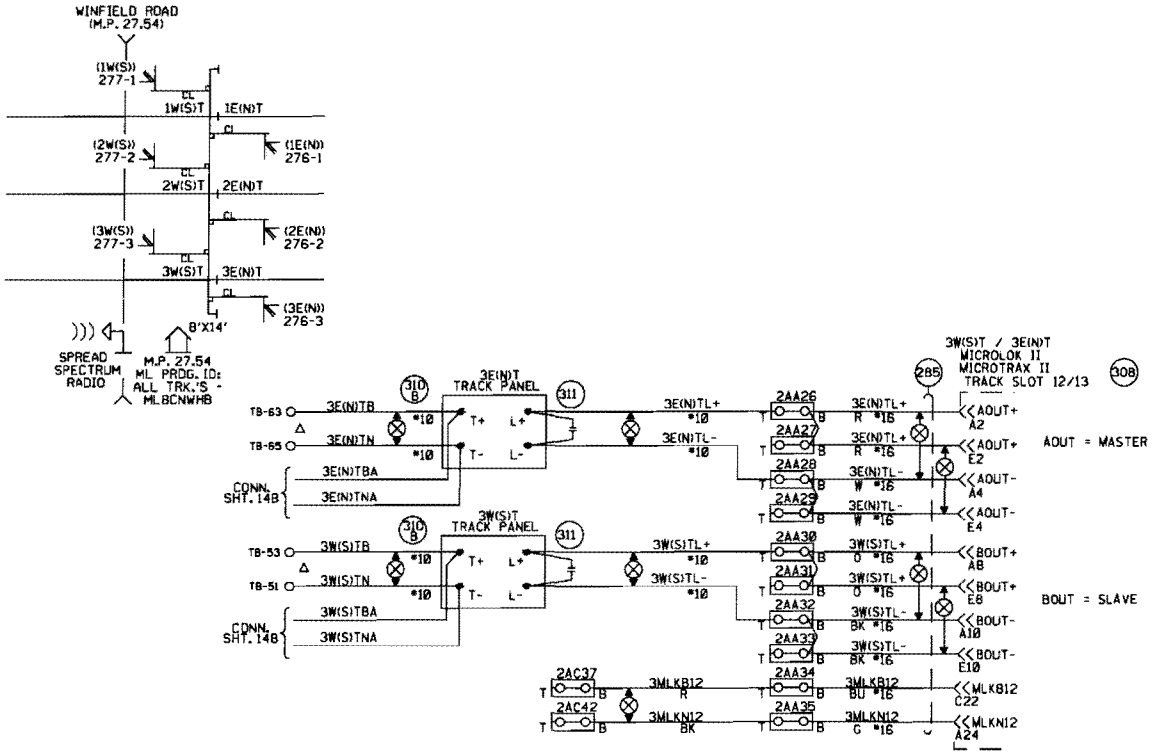

△ FIELD ENSURE PROPER TRACK POLARITY AND "AC" ACCORDINGLY

NEW SHEET
GENEVA SUBDIVISION
SIGNALS 1W(S)-E(N)
SIGNALS 2W(S)-E(N)
SIGNALS 3W(S)-E(N)
M.P. 27.54
8'X14' HOUSE

					1 06-09-08 INSTALL HALF BLOCK SYSTEM FROM TURNER TO BARR, ILLINOIS. (PHASE 1 PART 1)	MODIFICATION LEVEL		UNION PACIFIC SAFETY QUALITY PRODUCTIVITY SIGNAL DESIGN	DES: CTC DIG: CTC CHK: JJL A.F.E. 88114 ID: GEN2754.12AS	UNION PACIFIC RAILROAD CHICAGO, ILLINOIS TO CLINTON, IOWA C.T.C. CIRCUITS Office of Sr. AVP Engineering - Signal/TCO Omaha, Nebraska	DATE 05-09-08 SHEET 12A DWG 27.54 GEN
						O. A. LAST LEVEL CHECKED	DD				
						LAST LEVEL MOD THIS TYPICAL	DD				
						LAST LEVEL BY DESIGNER	DD				
						CHANGED FROM TYPICAL?	Y				

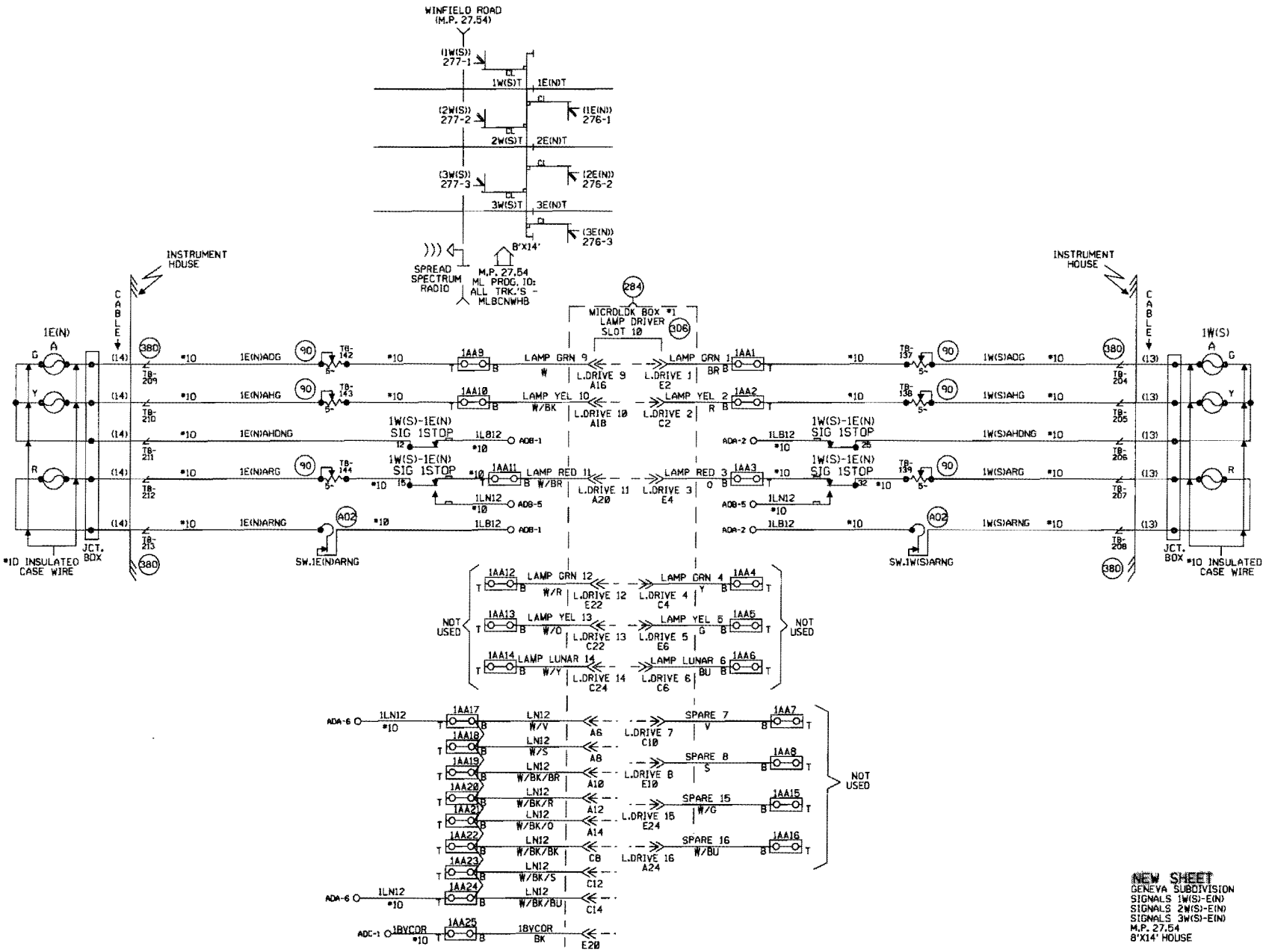

11	06-09-08 INSTALL MALF BLOCK SYSTEM FROM TURNER TO PARK, ILLINOIS. PHASE 1 PART 1 MP. 27.00 TO MP. 28.841 ATS 70814 JD / JCTC/MDF	MODIFICATION LEVEL		UNION PACIFIC SAFETY PRODUCTIVITY SAFETY SIGNAL DESIGN	DES: CTC	UNION PACIFIC RAILROAD	DATE 06-09-08
		G. A. LAST LEVEL CHECKED	DD		DIG: CTC	CHICAGO, ILLINOIS TO CLINTON, IOWA C.T.C. CIRCUITS	SHEET 13
		LAST LEVEL MOD THIS TYPICAL	DD		CHK: JJL		DWG 27.54
		LAST LEVEL BY DESIGNER	DD		A.F.E. 88114		GEN
		CHANGED FROM TYPICAL?	Y		ID= GEN2754.135	Office of Sr. AVP Engineering - Signal/TCD Omaha, Nebraska	

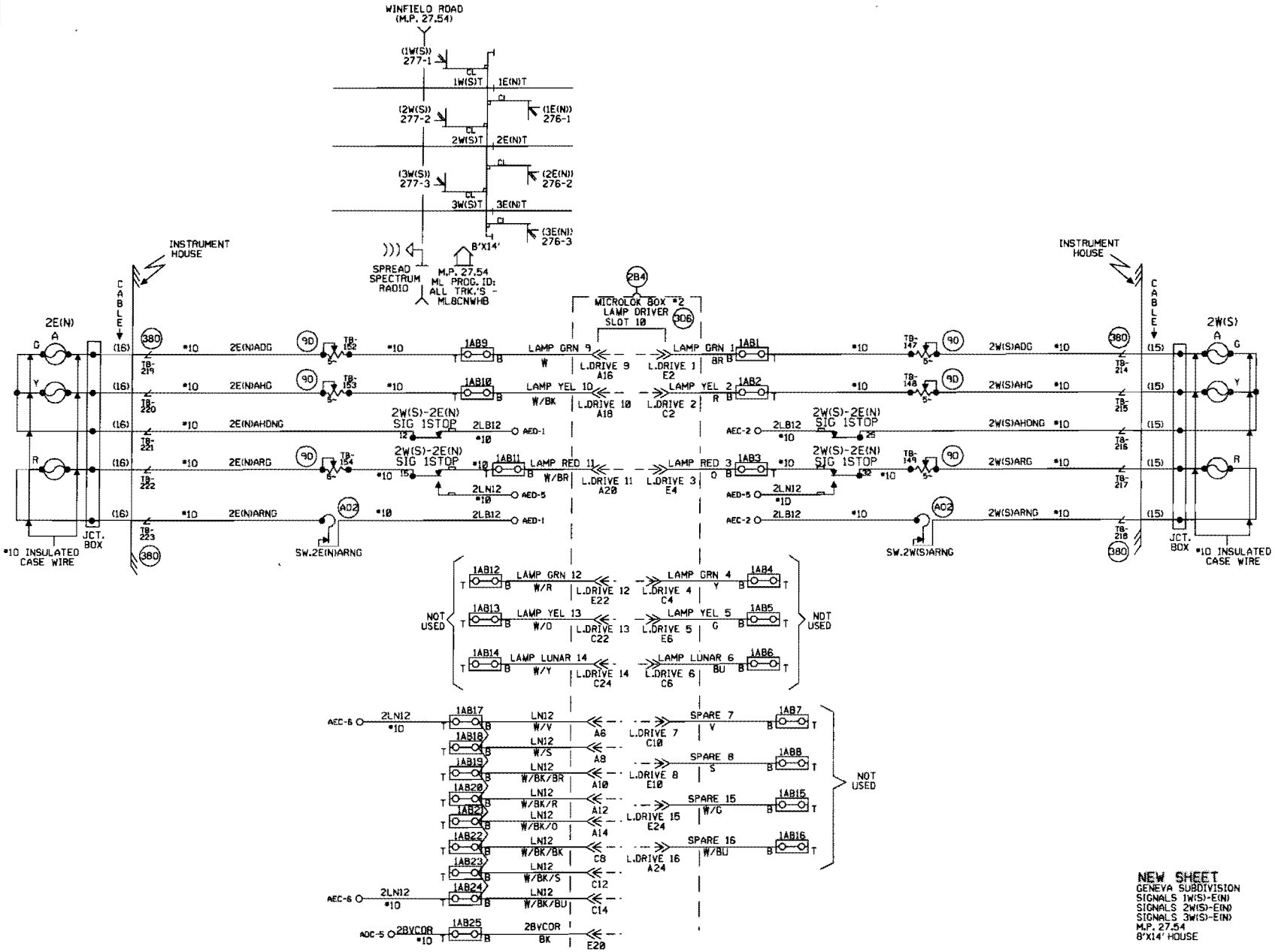

MODIFICATION LEVEL	
G.A. LAST LEVEL CHECKED	DD
LAST LEVEL MOD THIS TYPICAL	DD
LAST LEVEL BY DESIGNER	DD
CHANGED FROM TYPICAL?	Y

UNION PACIFIC
SIGNAL DESIGN

DES: CTC
DIG: CTC
CHK: JJL
A.F.E. 88114
ID: GEN2754.13AS

UNION PACIFIC RAILROAD
CHICAGO, ILLINOIS TO
CLINTON, IOWA
C.T.C. CIRCUITS
Office of Sr AVP Engineering - Signal/TCO Omaha, Nebraska

DATE 06-09-08
SHEET 13A
DWG 27.54
GEN

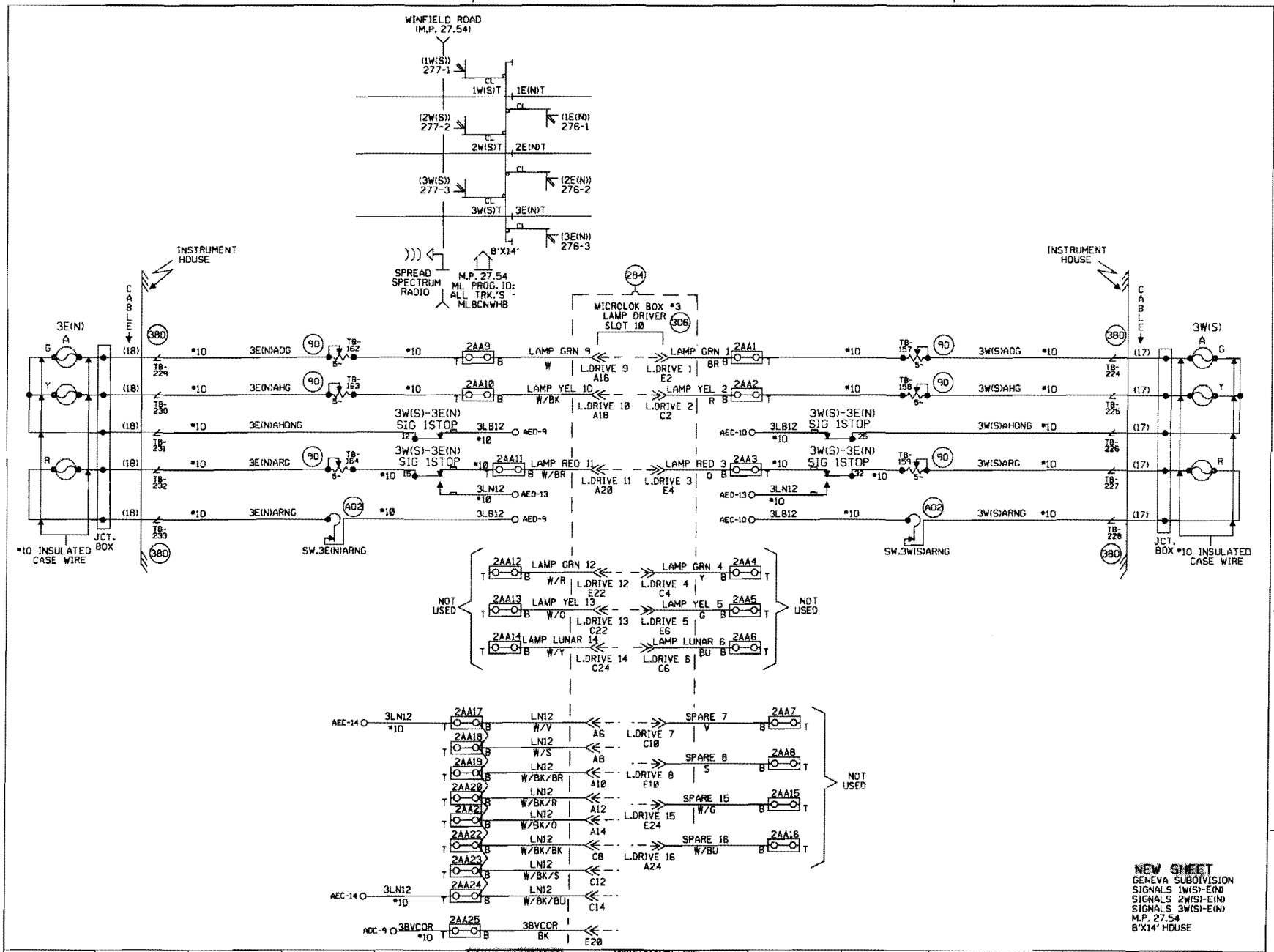

1 06-09-08 INSTALL HALF BLOCK SYSTEM FROM TURNER TO PARK, ILLINOIS. PHASE I PART I (MP. 29.50 TO MP. 25.54) AFE 88114 J.J. /CTC/MDF	MODIFICATION LEVEL		UNION PACIFIC QUALITY PRODUCTIVITY SAFETY SIGNAL DESIGN	DES: CTC	UNION PACIFIC RAILROAD	DATE 06-09-08
	Q.A. LAST LEVEL CHECKED	DQ		DIG: CTC	CHICAGO, ILLINOIS TO	SHEET 138
	LAST LEVEL MOD THIS TYPICAL	DQ		CHK: JJL	CLINTON, IOWA	DWG 27.54
	LAST LEVEL BY DESIGNER	DQ		A.F.E. 88114	C.T.C. CIRCUITS	GEN
	CHANGED FROM TYPICAL?	Y		ID: GEN2754.136S	Office of Sr AVP Engineering - Signal/TCO Omaha, Nebraska	

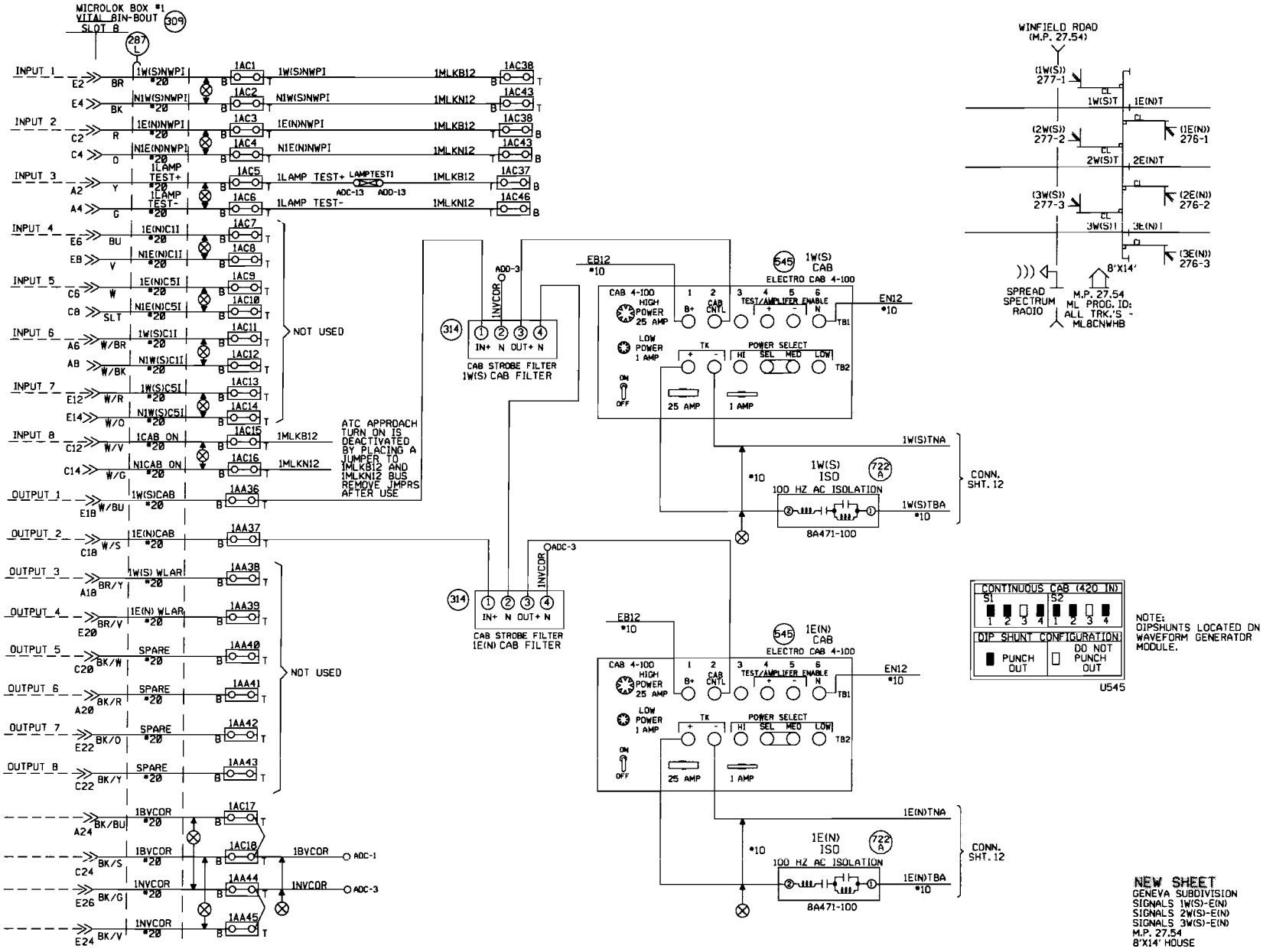

1	06-09-08 INSTALL HALF BLOCK SYSTEM FROM TURNER TO PARK ILLINOIS. PHASE 1 PART 1 APP. 25.20 TO MP. 25.54 DATE 88114 J.J. /CTC/PDF	MODIFICATION LEVEL		UNION PACIFIC SAFETY QUALITY PRODUCTIVITY SIGNAL DESIGN	DES: CTC	UNION PACIFIC RAILROAD	DATE 06-09-08
		O. A. LAST LEVEL CHECKED	DO		DIG: CTC	CHICAGO, ILLINOIS TO CLINTON, IOWA C.T.C. CIRCUITS	SHEET 14
		LAST LEVEL MOD THIS TYPICAL	DO		CHK: JJL		DWG 27.54
		LAST LEVEL BY DESIGNER	DO		A.F.E. 88114		GEN
		CHANGED FROM TYPICAL?	Y		ID: GEN2754.14S	Office of Sr AVP Engineering - Signal/TCO Omaha, Nebraska	

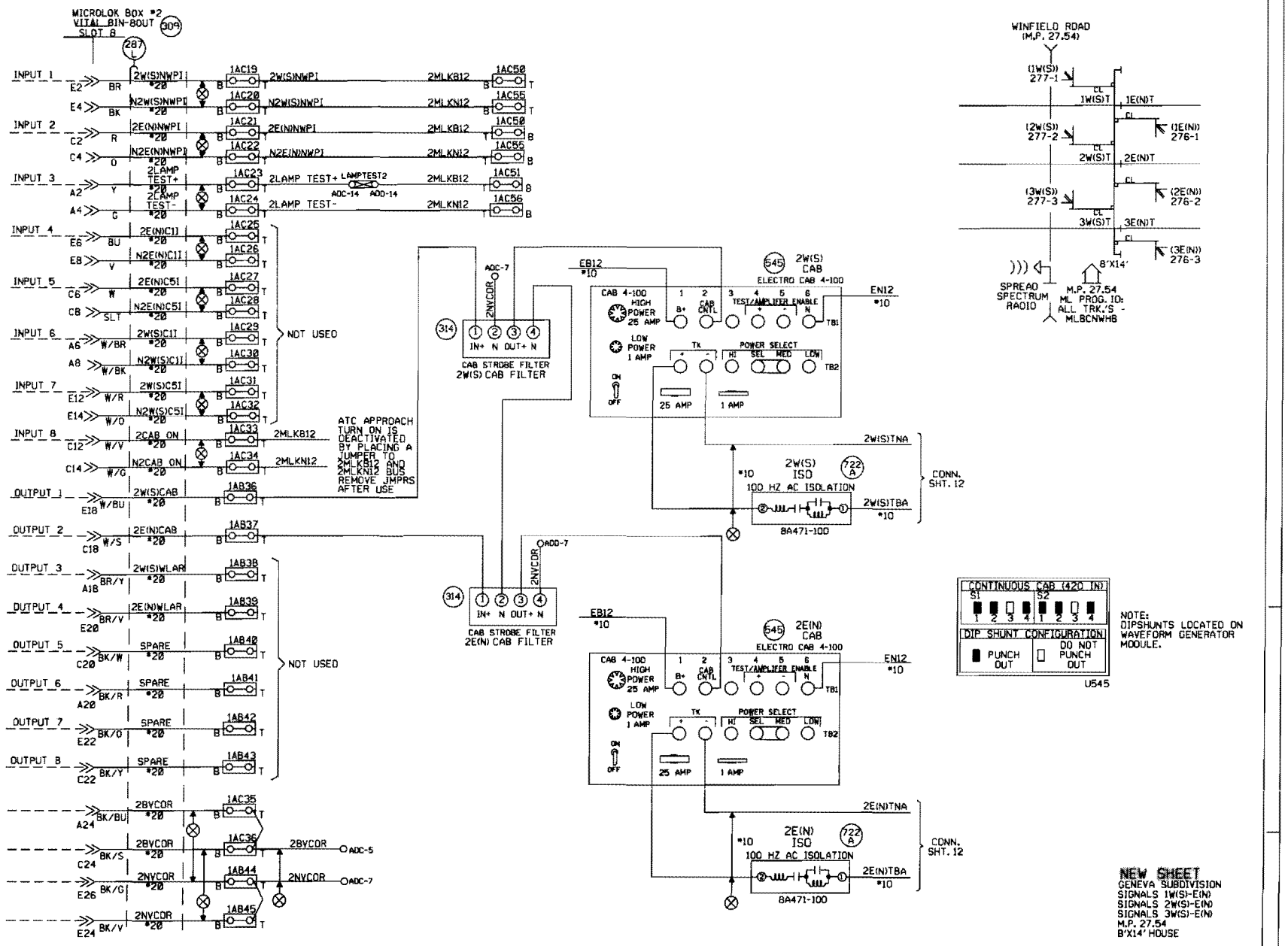

MODIFICATION LEVEL	
D.A. LAST LEVEL CHECKED	00
LAST LEVEL MOD THIS TYPICAL	00
LAST LEVEL BY DESIGNER	00
CHANGED FROM TYPICAL?	Y

UNION PACIFIC SIGNAL DESIGN

DES: CTC
DIG: CTC
CHK: JJL
A.F.E. 88114
ID: GEN2754.14AS

UNION PACIFIC RAILROAD

CHICAGO, ILLINOIS TO
CLINTON, IOWA
C.T.C. CIRCUITS

Office of Sr. AVP Engineering - Signal/TCD Omaha, Nebraska

DATE 08-09-08
SHEET 14A
DWG 27.54
GEN

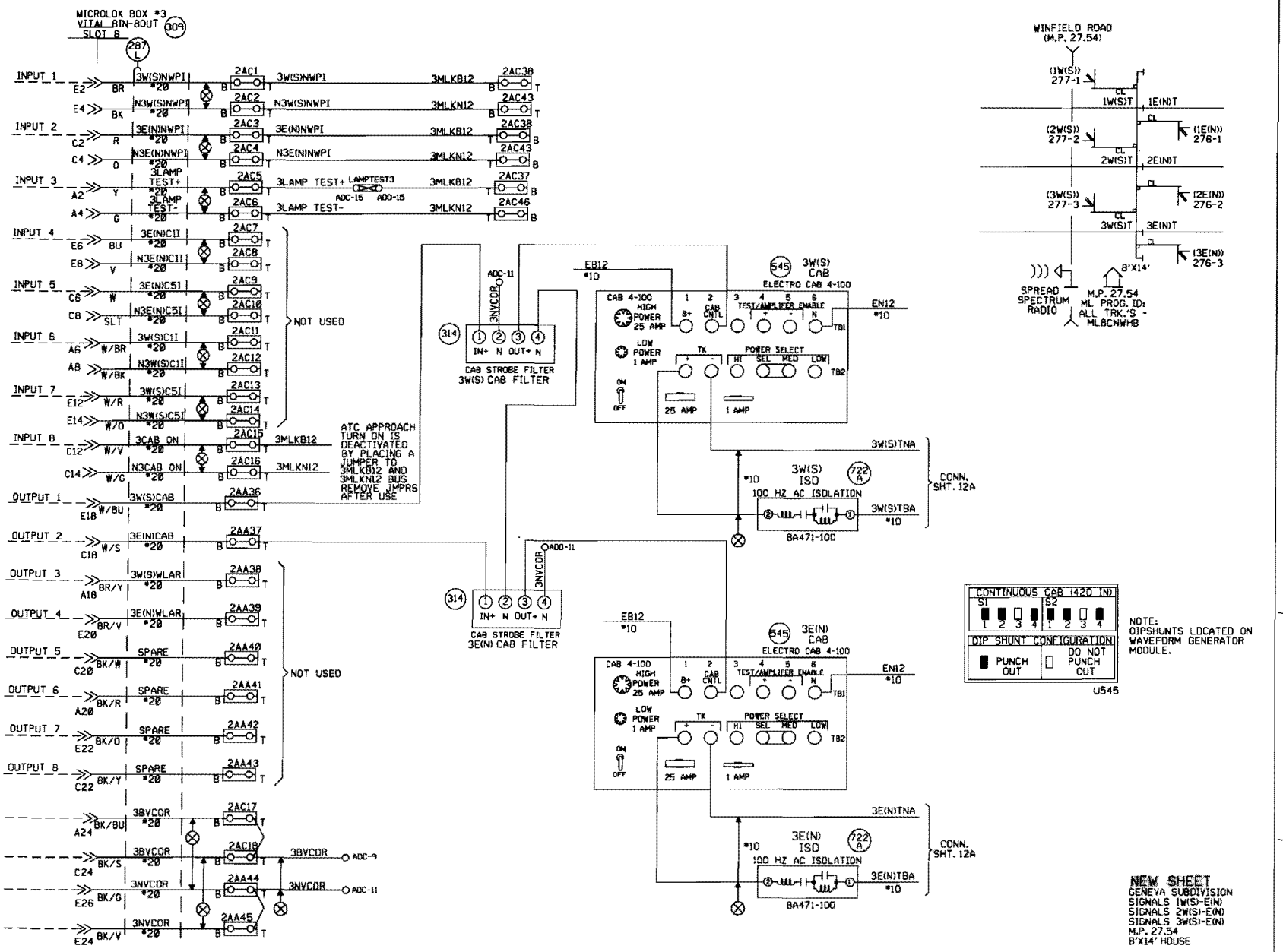

1 06-09-08 INSTALL HALF BLOCK SYSTEM FROM TURNER TO PARK, ILLINOIS. PHASE I PART I MP. 24.00 TO MP. 25.541 AFE 88114 J.J. /CTC/MDP	MODIFICATION LEVEL		UNION PACIFIC SIGNAL DESIGN	DES: CTC	UNION PACIFIC RAILROAD	DATE 06-09-08
	O.A. LAST LEVEL CHECKED	DD		DIG: CTC	CHICAGO, ILLINOIS TO CLINTON, IOWA C.T.C. CIRCUITS	SHEET 148
	LAST LEVEL MOD THIS TYPICAL	DD		CHK: JJL		DWG 27.54
	LAST LEVEL BY DESIGNER	DD		A.F.E. 88114		GEN
	CHANGED FROM TYPICAL?	Y		ID: GEN2754.14BS	Office of Sr AVP Engineering - Signal/TCO Omaha, Nebraska	

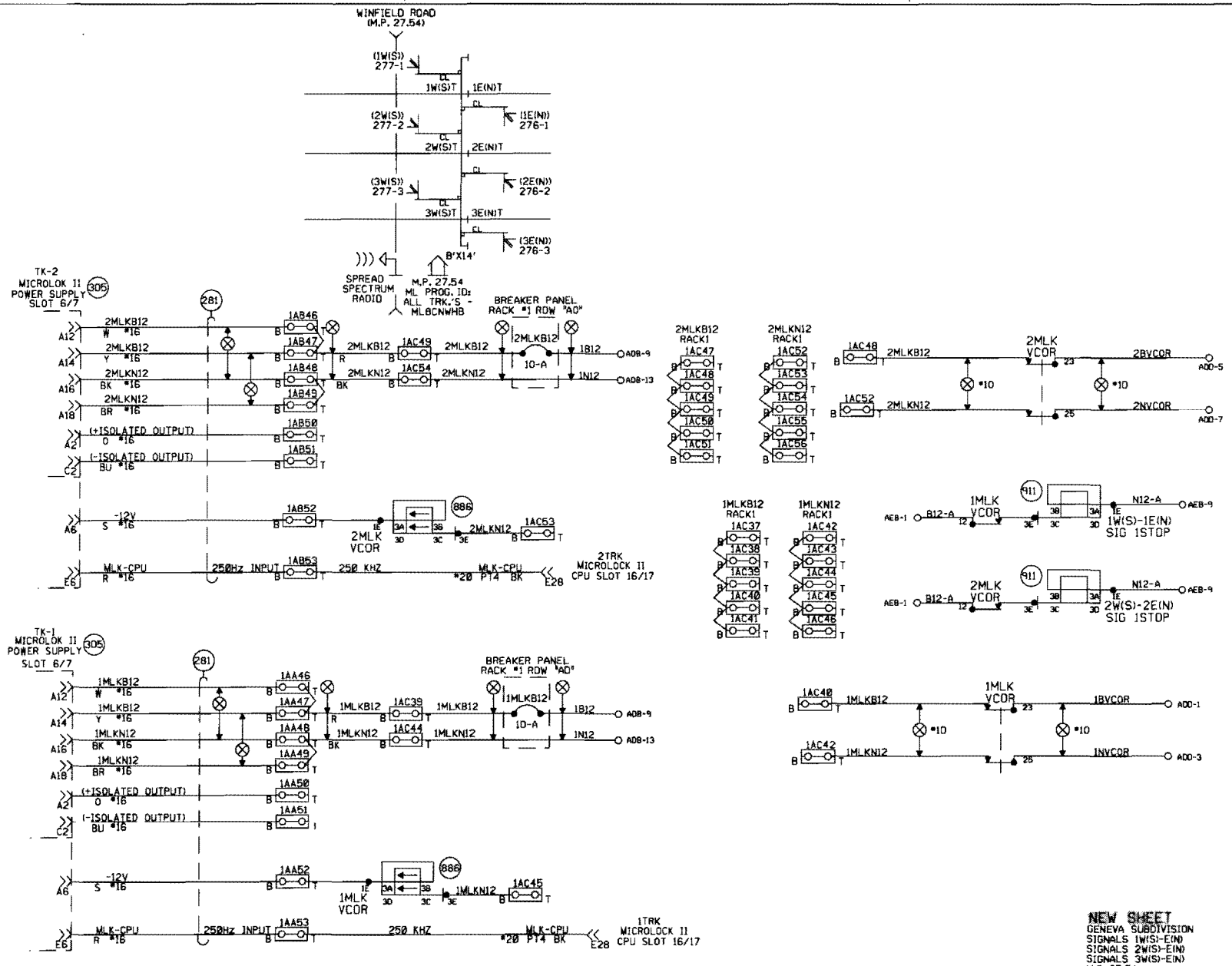

NEW SHEET
GENEVA SUBDIVISION
SIGNALS 1W(S)-E(N)
SIGNALS 2W(S)-E(N)
SIGNALS 3W(S)-E(N)
M.P. 27.54
B'X14' HOUSE

MODIFICATION LEVEL	
Q.A. LAST LEVEL CHECKED	DD
LAST LEVEL MOD THIS TYPICAL	DD
LAST LEVEL BY DESIGNER	DD
CHANGED FROM TYPICAL?	Y

UNION PACIFIC
SIGNAL DESIGN

DES: CTC
DIG: CTC
CHK: JJL
A.F.E.: 88114
ID: GEN2754.155

UNION PACIFIC RAILROAD

CHICAGO, ILLINOIS TO
CLINTON, IOWA
C.T.C. CIRCUITS

Office of Sr. AVP Engineering - Signal/TCD Omaha, Nebraska

DATE 06-09-06
SHEET 15
DWG 27.54
GEN

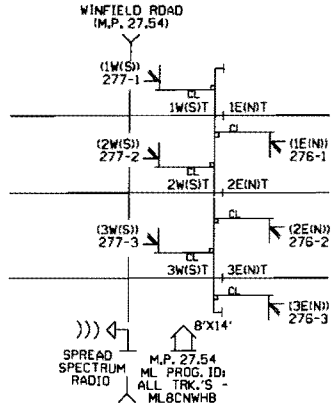

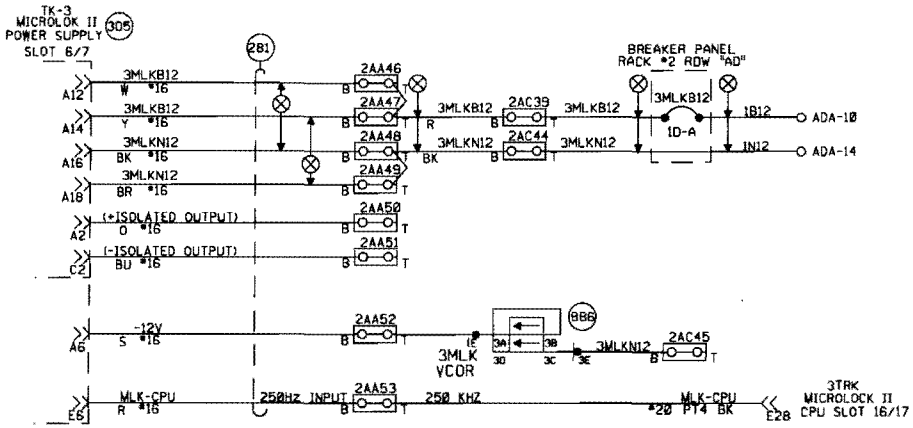

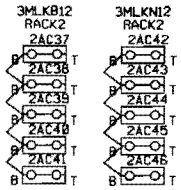

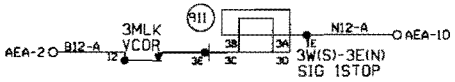

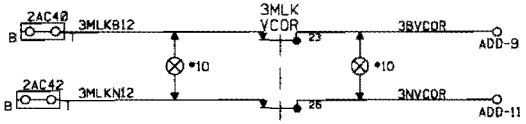

NEW SHEET
GENEVA SUBDIVISION
SIGNALS 1W(S)-E(N)
SIGNALS 2W(S)-E(N)
SIGNALS 3W(S)-E(N)
M.P. 27.54
8'X14' HOUSE

1	06-09-08	INSTALL HALF BLOCK STATION FROM TURNER TO FORT ELLINGER. SIGNAL 1 PHASE 1 MP 25.00 TO MP. 28.541
		J.S. ACTEMPO

MODIFICATION LEVEL	
O.A. LAST LEVEL CHECKED	DQ
LAST LEVEL MOD THIS TYPICAL	DQ
LAST LEVEL BY DESIGNER	DQ
CHANGED FROM TYPICAL?	Y

UNION PACIFIC
SAFETY QUALITY PRODUCTIVITY
SIGNAL DESIGN

DES: CTC
DIG: CTC
CHK: JJL
A.F.E. 88114
ID: GEN2754.15AS

UNION PACIFIC RAILROAD
CHICAGO, ILLINOIS TO
CLINTON, IOWA
C.T.C. CIRCUITS
Office of Sr. VP Engineering - Signal/TCD Omaha, Nebraska

DATE 06-09-08
SHEET 15A
DWG 27.54
GEN

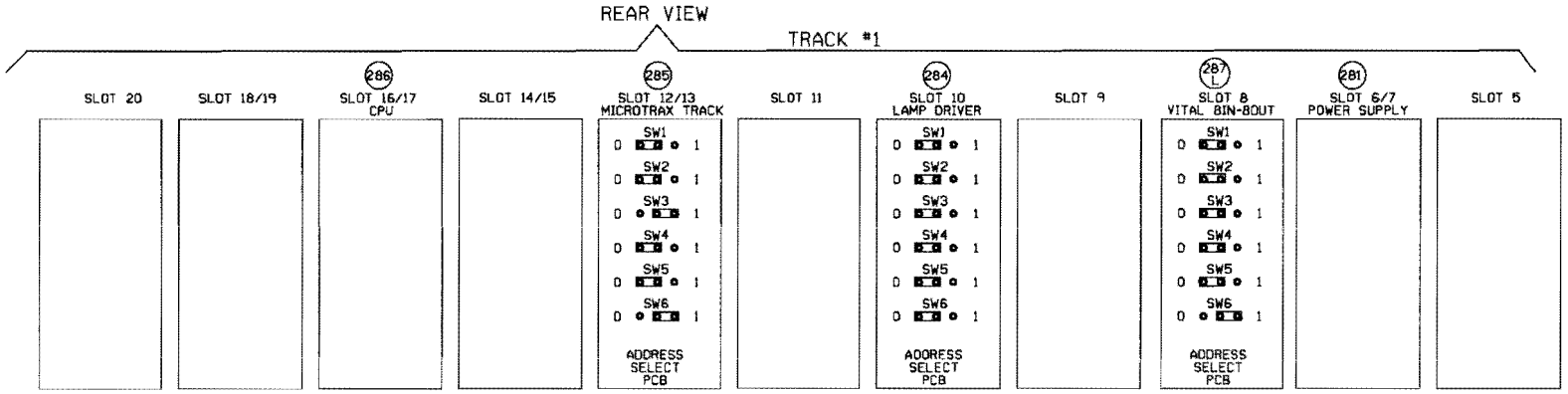

MLBCNWHB

14 T.O. TO EAST?	
14 T.O. TO WEST?	
20 T.O. TO EAST?	
20 T.O. TO WEST?	
PROGRAM ID 1 (BINARY 1)	
PROGRAM ID 2 (BINARY 2)	
PROGRAM ID 3 (BINARY 4)	
PROGRAM ID 4 (BINARY 8)	
PROGRAM ID 5 (BINARY 16)	
PROGRAM ID 6 (BINARY 32)	
PROGRAM ID 7 (BINARY 64)	
PROGRAM ID 8 (BINARY 128)	X
WEST TK UP SEND C5 EAST	X
REC C5 W TK SEND C5 EAST	
EAST TK UP SEND C5 WEST	
REC C5 E TK SEND C5 WEST	X

PLACE AN "X" IN THE BOX FOR DESIRED CONFIGURATION.

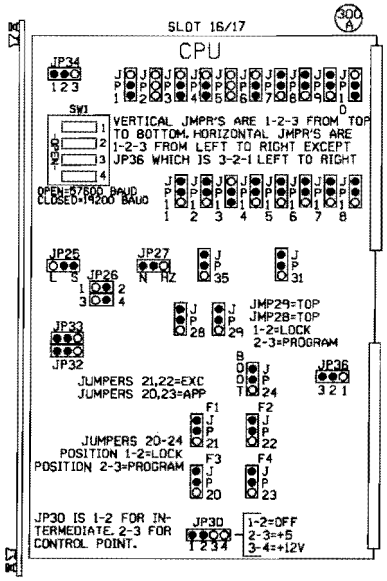

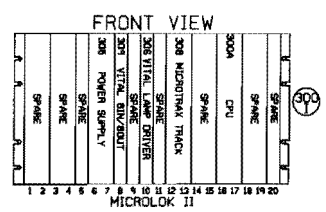

NEW SHEET
GENEVA SUBDIVISION
SIGNALS 1W(S)-E(N)
SIGNALS 2W(S)-E(N)
SIGNALS 3W(S)-E(N)
M.P. 27.54
8'X14' HOUSE

1 06-09-08 INSTALL HALF BLOCK SYSTEM FROM TURNER TO PARK, ILLINOIS. PHASE I PART I MP. 29.00 TO MP. 25.54 AFE 88114 JJL /CTC/MDF	MODIFICATION LEVEL		UNION PACIFIC SIGNAL DESIGN	DES: CTC DIG: CTC CHK: JJL A.F.E. 88114 ID: GEN2754.16S	UNION PACIFIC RAILROAD CHICAGO, ILLINOIS TO CLINTON, IOWA C.T.C. CIRCUITS Office of Sr AVP Engineering - Signal/TCO Omaha, Nebraska
	Q.A. LAST LEVEL CHECKED	DQ			DATE 06-09-08
	LAST LEVEL MOD THIS TYPICAL	DQ			SHEET 16
	LAST LEVEL BY DESIGNER	DQ			DWG 27.54
	CHANGED FROM TYPICAL?	Y			GEN

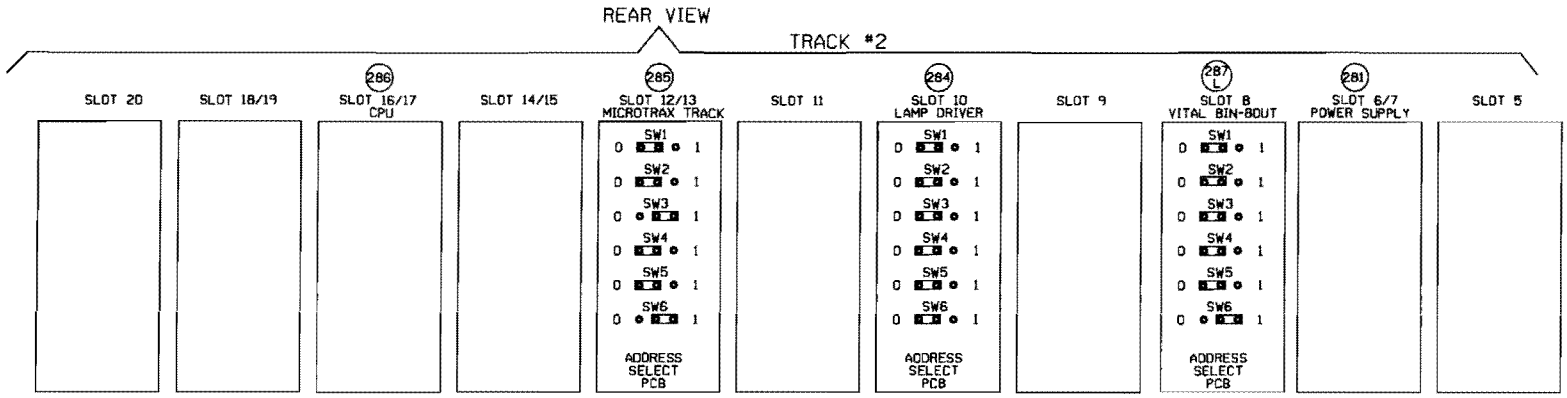

ML8CNWHB	
14 T.O. TO EAST?	
14 T.O. TO WEST?	
20 T.O. TO EAST?	
20 T.O. TO WEST?	
PROGRAM ID 1 (BINARY 1)	
PROGRAM ID 2 (BINARY 2)	
PROGRAM ID 3 (BINARY 4)	
PROGRAM ID 4 (BINARY 8)	
PROGRAM ID 5 (BINARY 16)	
PROGRAM ID 6 (BINARY 32)	
PROGRAM ID 7 (BINARY 64)	
PROGRAM ID 8 (BINARY 128)	X
WEST TK UP SEND C5 EAST	X
REC C5 W TK SEND C5 EAST	
EAST TK UP SEND C5 WEST	
REC C5 E TK SEND C5 WEST	X

PLACE AN "X" IN THE BOX FOR DESIRED CONFIGURATION.

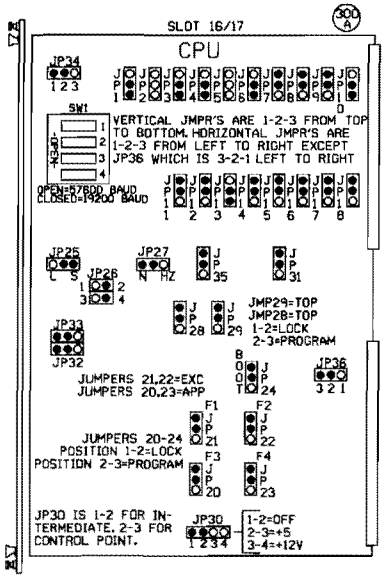

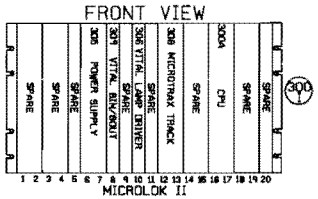

NEW SHEET
GENEVA SUBDIVISION
SIGNALS 1W(S)-E(N)
SIGNALS 2W(S)-E(N)
SIGNALS 3W(S)-E(N)
M.P. 27.54
8'X14' HOUSE

1	06-09-08	INSTALL HALF BLOCK SYSTEM FROM TURNER TO PARK BLINDER. PHASE 1 PART 1
		J.S. /CTC/MOF

MODIFICATION LEVEL	
Q.A. LAST LEVEL CHECKED	00
LAST LEVEL MOD THIS TYPICAL	00
LAST LEVEL BY DESIGNER	00
CHANGED FROM TYPICAL?	Y
02/01/08 STALINIC,SA	

UNION PACIFIC
SAFETY PRODUCTIVITY
SIGNAL DESIGN

DES:	CTC
DIG:	CTC
CHK:	JJL
A.F.E.	88114
ID:	GEN2754JSAS

UNION PACIFIC RAILROAD
CHICAGO, ILLINOIS TO
CLINTON, IOWA
C.T.C. CIRCUITS
Office of Sr. AVP Engineering - Signal/TCD Omaha, Nebraska

DATE	06-09-08
SHEET	16A
DWG	27.54
	GEN

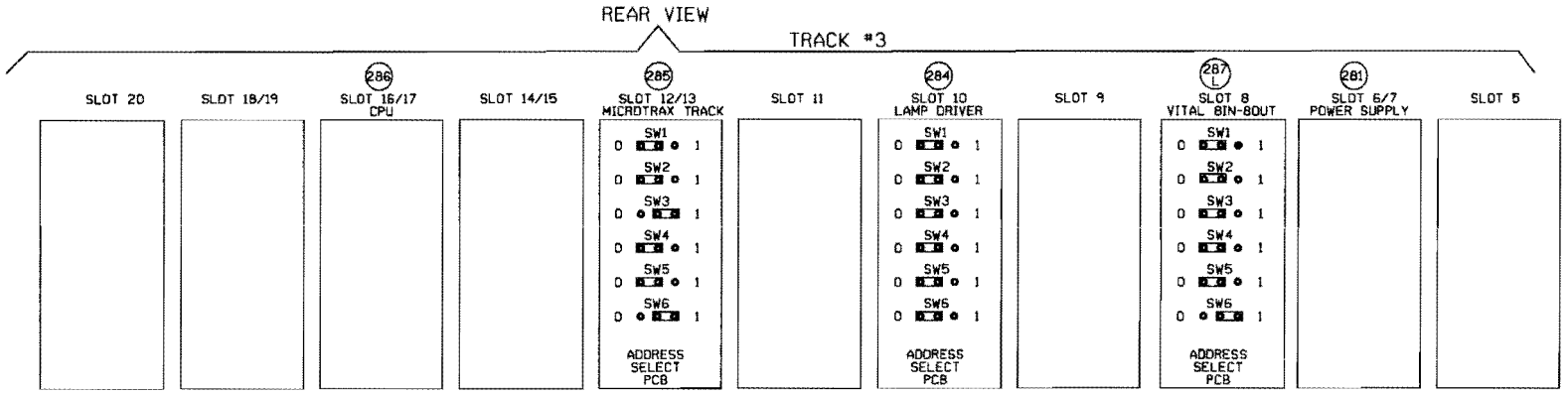

ML8CNWHB

14 T.O. TO EAST?	
14 T.O. TO WEST?	
20 T.O. TO EAST?	
20 T.O. TO WEST?	
PROGRAM ID 1 (BINARY 1)	
PROGRAM ID 2 (BINARY 2)	
PROGRAM ID 3 (BINARY 4)	
PROGRAM ID 4 (BINARY 8)	
PROGRAM ID 5 (BINARY 16)	
PROGRAM ID 6 (BINARY 32)	
PROGRAM ID 7 (BINARY 64)	
PROGRAM ID 8 (BINARY 128)	X
WEST TK UP SEND C5 EAST	X
REC C5 W TK SEND C5 EAST	
EAST TK UP SEND C5 WEST	
REC C5 E TK SEND C5 WEST	X

PLACE AN "X" IN THE BOX FOR DESIRED CONFIGURATION.

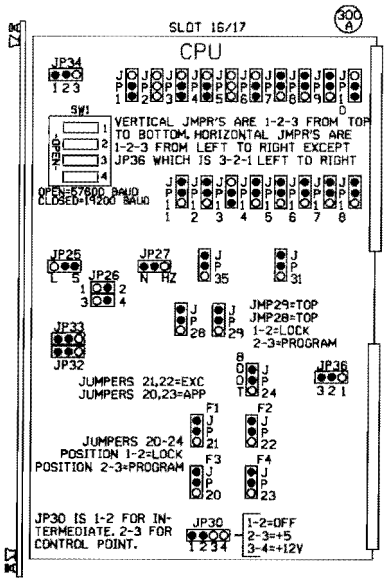

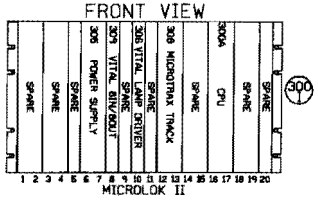

NEW SHEET
GENEVA SUBDIVISION
SIGNALS 1W(S)-E(N)
SIGNALS 2W(S)-E(N)
SIGNALS 3W(S)-E(N)
M.P. 27.54
8'X14' HOUSE

1 06-09-08 INSTALL HALF BLOCK SYSTEM FROM TURNER TO PARK ILLINOIS. PHASE I PART I REF. PROJ TO NO. 26,541 AFE 98884	MODIFICATION LEVEL		UNION PACIFIC SAFETY PRODUCTIVITY INTEGRITY SIGNAL DESIGN	DES: CTC	UNION PACIFIC RAILROAD
	Q. A. LAST LEVEL CHECKED	DO		DIG: CTC	CHICAGO, ILLINOIS TO CLINTON, IOWA
	LAST LEVEL MOD THIS TYPICAL	DO		CHK: JJL	C.T.C. CIRCUITS
	LAST LEVEL BY DESIGNER	DO		A.F.E. 88114	DATE 06-09-08
	CHANGED FROM TYPICAL?	Y		ID: GEN2754.168S	SHEET 168
					DWG 27.54
					GEN

Office of Sr AVP Engineering - Signal/TCD Omaha, Nebraska

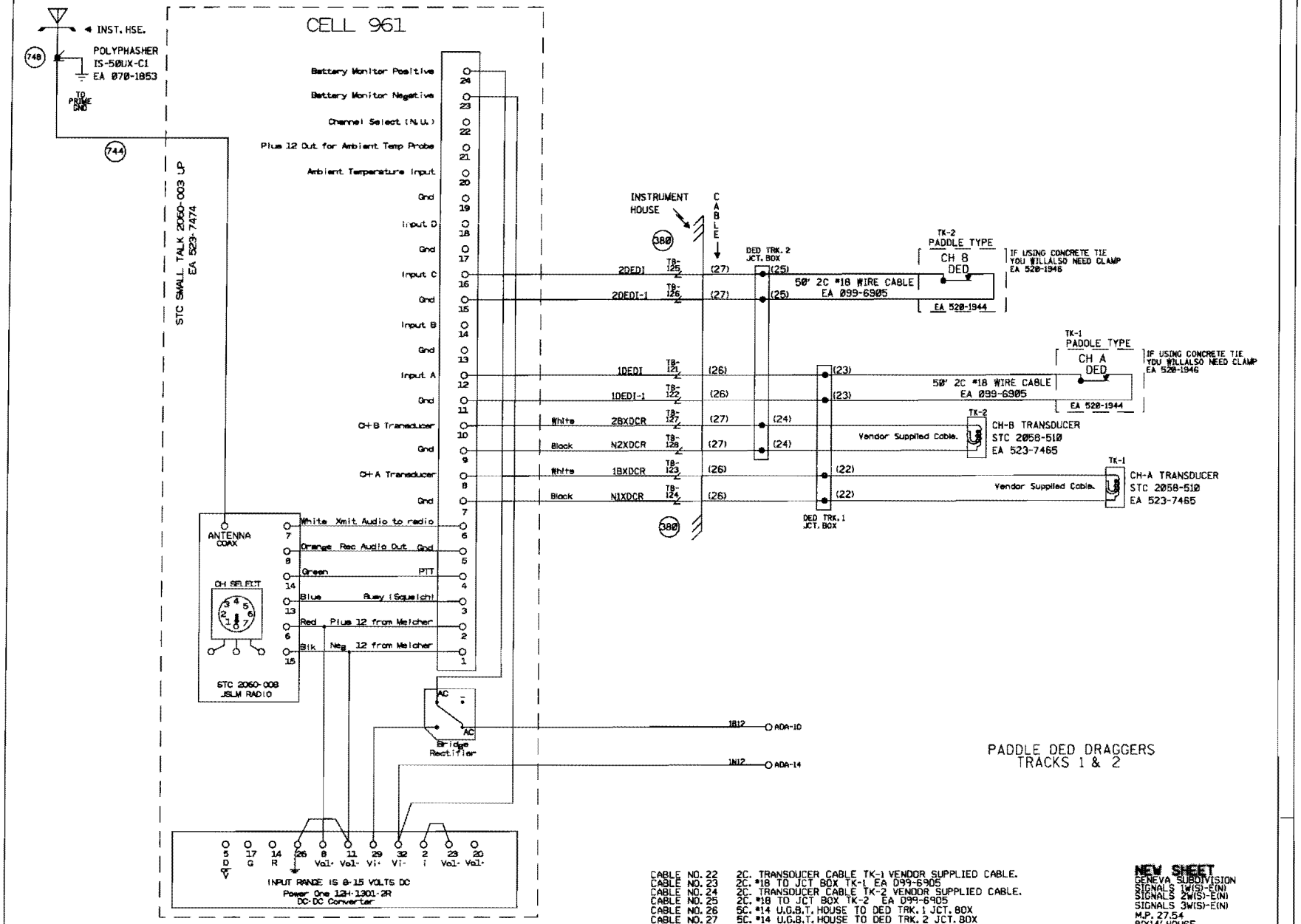

CABLE NO. 22 2C. TRANSDUCER CABLE TK-1 VENDOR SUPPLIED CABLE.
CABLE NO. 23 2C. #18 TO JCT BOX TK-1 EA 099-6905
CABLE NO. 24 2C. TRANSDUCER CABLE TK-2 VENDOR SUPPLIED CABLE.
CABLE NO. 25 2C. #18 TO JCT BOX TK-2 EA 099-6905
CABLE NO. 26 5C. #14 U.G.B.T. HOUSE TO DED TRK. 1 JCT. BOX
CABLE NO. 27 5C. #14 U.G.B.T. HOUSE TO DED TRK. 2 JCT. BOX

NEW SHEET
GENEVA SUBDIVISION
SIGNALS 1W(S)-E(N)
SIGNALS 2W(S)-E(N)
SIGNALS 3W(S)-E(N)
M.P. 27.54
8'X14' HOUSE

MODIFICATION LEVEL	
D.A. LAST LEVEL CHECKED	DQ
LAST LEVEL MOD THIS TYPICAL	DQ
LAST LEVEL BY DESIGNER	DQ
CHANGED FROM TYPICAL?	Y

UNION PACIFIC
SIGNAL DESIGN

DES: CTC
DIG: CTC
CHK: JJL
A.F.E. 88114
ID: GEN2754.17S

UNION PACIFIC RAILROAD
CHICAGO, ILLINOIS TO
CLINTON, IOWA
C.T.C. CIRCUITS
Office of Sr AVP Engineering - Signal/TCO Omaha, Nebraska

DATE 06-09-08
SHEET 17
DWG 27.54
GEN

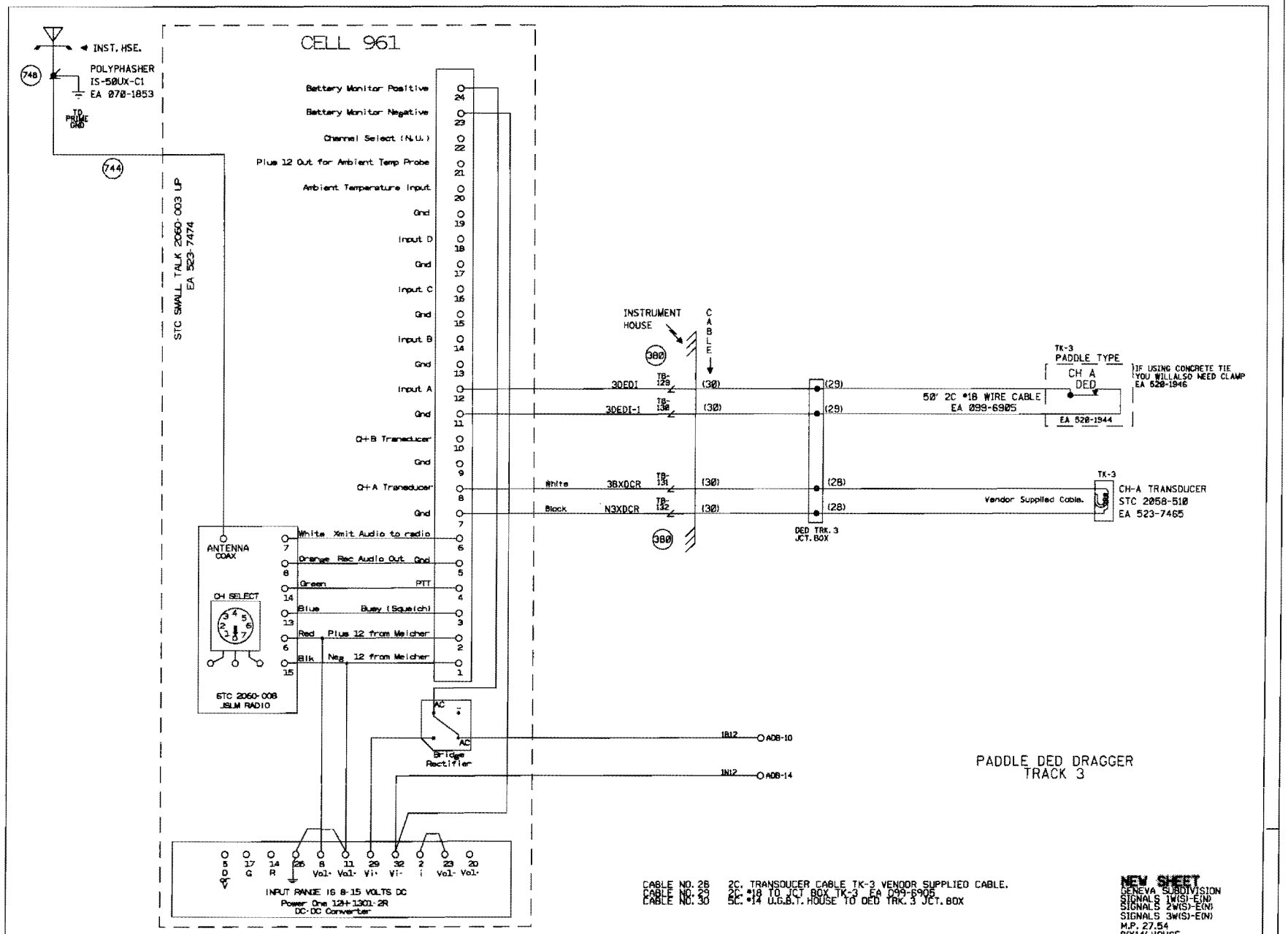
CELL 961
INST. HSE.
POLYPHASHER
IS-50UX-C1
EA 070-1853
TO PRIME GND
748
744
STC SMALL TALK 2060-003 UP
EA 523-7474
Battery Monitor Positive
Battery Monitor Negative
Channel Select (N.U.)
Plus 12 Out for Ambient Temp Probe
Ambient Temperature Input
Gnd
Input D
Input C
Input B
Input A
CH-B Transducer
CH-A Transducer
INSTRUMENT HOUSE
CABLE
380
3DEDI
3DEDI-1
3BXDCR
N3XDCR
White
Black
TB-129
TB-130
TB-131
TB-132
(30)
(29)
(28)
DED TRK. 3 JCT. BOX
50' 2C #18 WIRE CABLE
EA 099-6905
TK-3
PADDLE TYPE
CH A
DED
EA 520-1944
IF USING CONCRETE TIE YOU WILL ALSO NEED CLAMP
EA 520-1946
Vendor Supplied Cable.
CH-A TRANSDUCER
STC 2058-510
EA 523-7465
ANTENNA COAX
CH SELECT
White Xmit Audio to radio
Orange Rec Audio Out Gnd
Green PTT
Blue Busy (Squelch)
Red Plus 12 from Melcher
Blk Neg 12 from Melcher
STC 2060-008
JSLM RADIO
AC
Bridge Rectifier
1B12
1N12
ADB-10
ADB-14
D G R Vol- Vol- Vi- Vi- i Vol- Vol-
INPUT RANGE IS 8-15 VOLTS DC
Power One 12+ 1301-2R
DC-DC Converter
PADDLE DED DRAGGER
TRACK 3
CABLE NO. 28 2C. TRANSDUCER CABLE TK-3 VENDOR SUPPLIED CABLE.
CABLE NO. 29 2C. #18 TO JCT BOX TK-3 EA 099-6905
CABLE NO. 30 5C. #14 U.G.B.T. HOUSE TO DED TRK. 3 JCT. BOX
NEW SHEET
GENEVA SUBDIVISION
SIGNALS 1W(S)-E(N)
SIGNALS 2W(S)-E(N)
SIGNALS 3W(S)-E(N)
M.P. 27.54
8'X14' HOUSE
MODIFICATION LEVEL
D.A. LAST LEVEL CHECKED DQ
LAST LEVEL MOD THIS TYPICAL DQ
LAST LEVEL BY DESIGNER DQ
CHANGED FROM TYPICAL? Y
UNION PACIFIC
SAFETY PRODUCTIVITY
SIGNAL DESIGN
DES: CTC
DIG: CTC
CHK: JJL
A.F.E. 88114
ID: GEN2754.17AS
UNION PACIFIC RAILROAD
CHICAGO, ILLINOIS TO
CLINTON, IOWA
C.T.C. CIRCUITS
Office of Sr. AVP Engineering - Signal/TCO Omaha, Nebraska
DATE 06-09-08
SHEET 17A
DWG 27.54
GEN

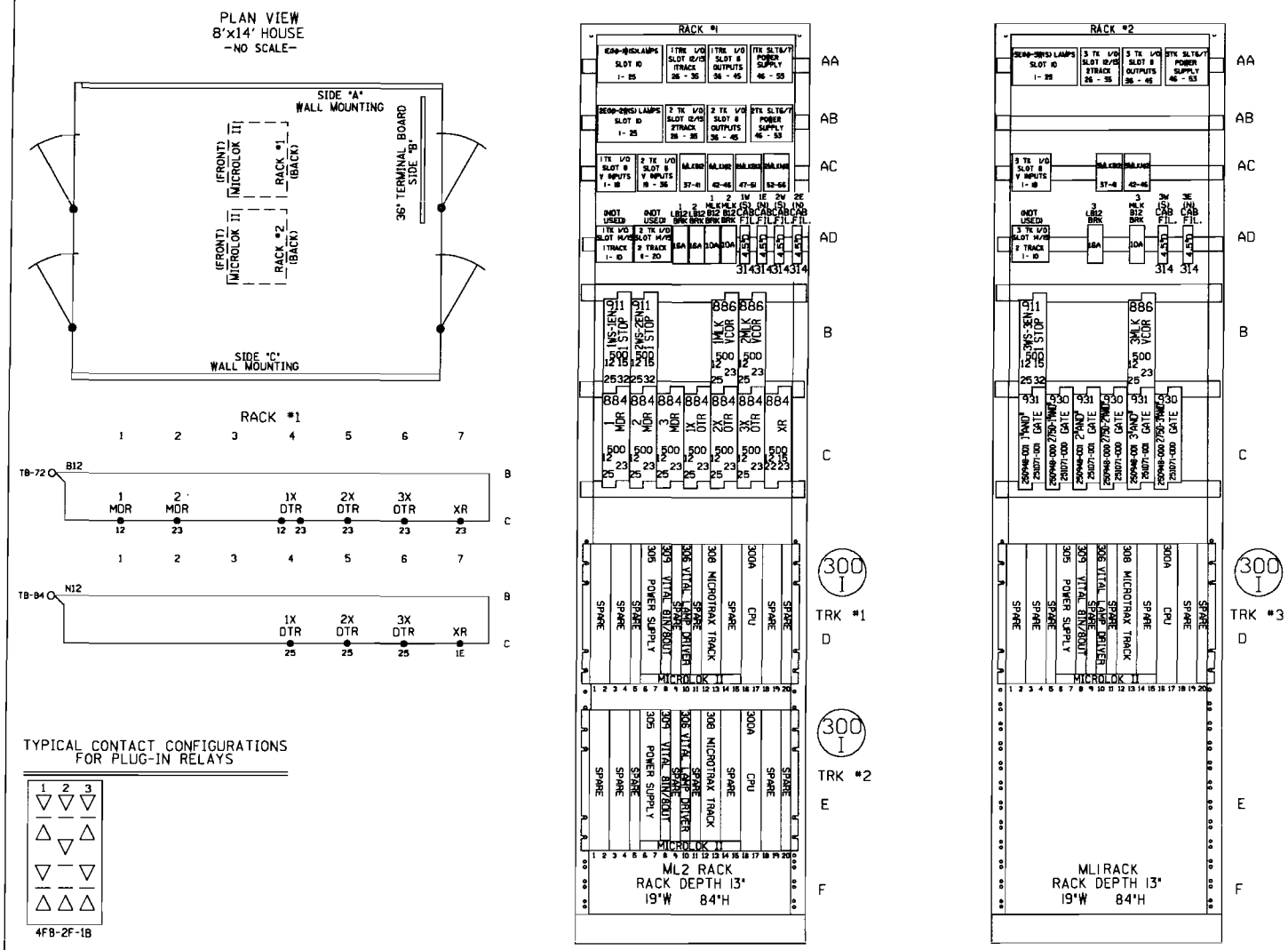

NEW SHEET
WINFIELD, ILLINOIS
WINFIELD ROAD
M.P. 27.54
GENEVA SUBDIVISION
D.O.T.#174 964H

1	06-09-08 INSTALL HALF BLOCK SYSTEM FROM TURNER TO PARK, ILLINOIS. PHASE 1 PART 1 (MP. 29.50 TO MP. 25.54) AFE #88114 J.J. /CTC/MCF	MODIFICATION LEVEL		UNION PACIFIC SIGNAL DESIGN	DES: CTC	UNION PACIFIC RAILROAD	DATE 06-09-08
		Q.A. LAST LEVEL CHECKED	DQ		DIG: CTC	CHICAGO, ILLINOIS TO CLINTON, IOWA C.T.C. CIRCUITS	SHEET 18
		LAST LEVEL MOD THIS TYPICAL	DQ		CHK: JJL		DWG 27.54
		LAST LEVEL BY DESIGNER	DQ		A.F.E. 88114		GEN
		CHANGED FROM TYPICAL?	Y		ID= GEN2754.18X	Office of Sr AVP Engineering - Signal/TCO Omaha, Nebraska	

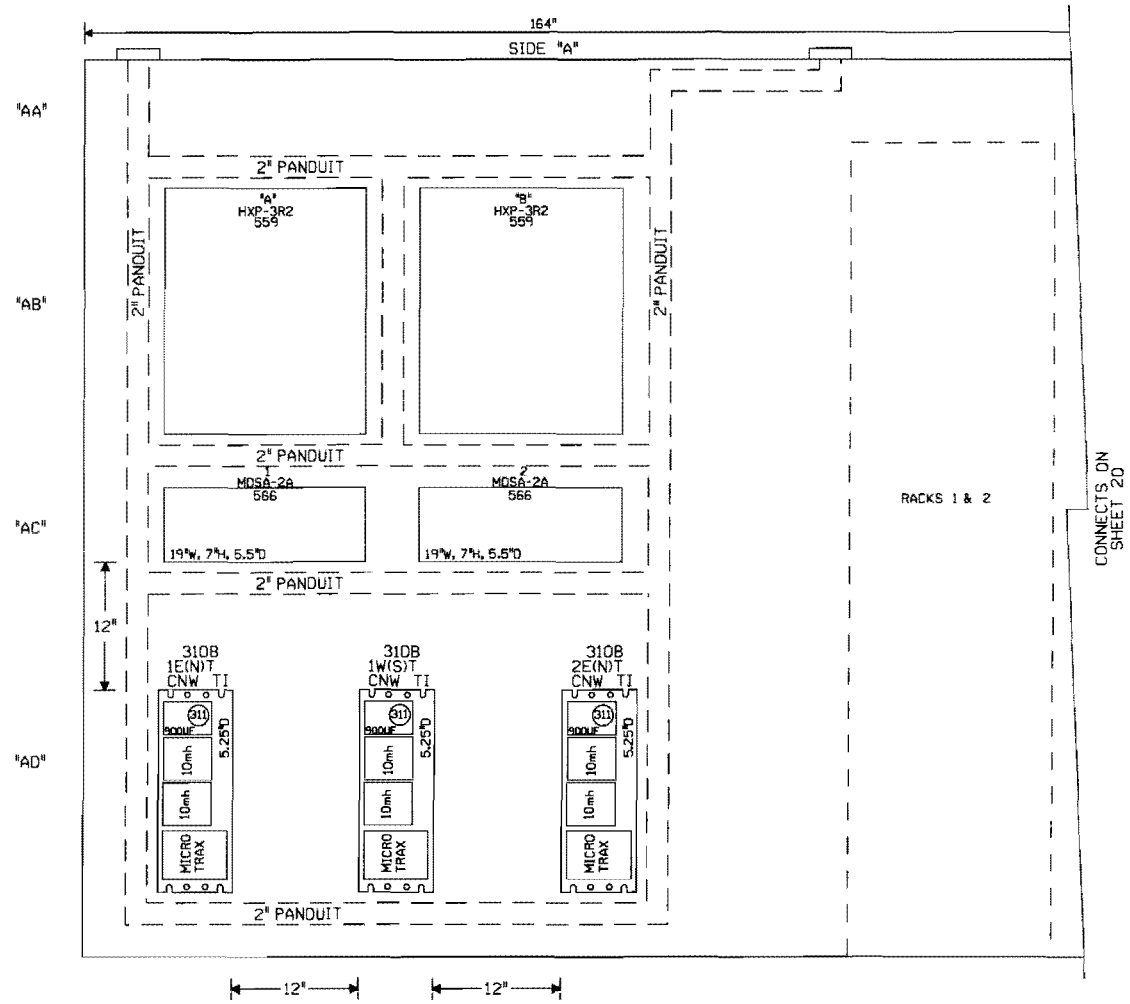

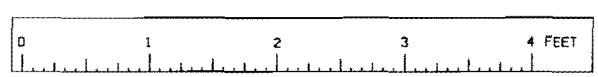

SCALE: 1.5 INCHES = 1 FOOT

NEW SHEET
WINFIELD, ILLINOIS
WINFIELD ROAD
M.P. 27.54
GENEVA SUBDIVISION
D.O.T.#174 964H

1 06-09-08 INSTALL HALF BLOCK SYSTEM FROM TURNER TO PARK, ILLINOIS. PHASE 1 PART 1 MP. 29.60 TO MP. 25.84 AFE #88114 JJL /CTC/MDF	UNION PACIFIC QUALITY PRODUCTIVITY SAFETY SIGNAL DESIGN	DES: CTC DIG: CTC CHK: JJL A.F.E. 88114 ID: GEN2754.19X	**UNION PACIFIC RAILROAD** CHICAGO, ILLINOIS TO CLINTON, IOWA C.T.C. CIRCUITS Office of Sr AVP Engineering - Signal/TCD Omaha, Nebraska	DATE 06-09-08 SHEET 19 DWG 27.54 GEN

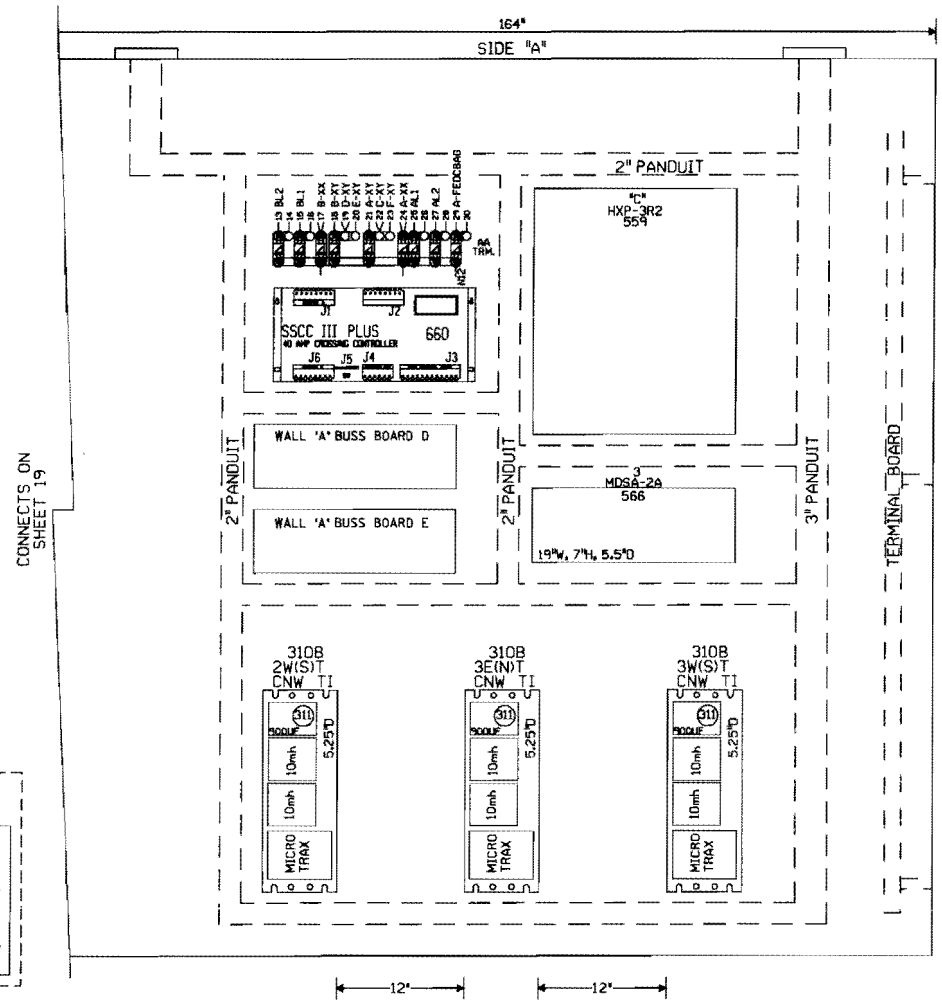

SHOP OR FIELD TO PROVIDE LOCATION OF TERMINATION SHUNTS.

646 A 1T FSS 326HZ	646 A 2T FSS 326HZ	646 A 3T FSS 326HZ	646 A 4T FSS 326HZ	646 A 5T FSS 326HZ	646 A 6T FSS 326HZ
644 A 2,000' DTL	644 A 2,250' DTL	644 A 2,000' DTL	644 A 2,250' DTL	644 A 2,000' DTL	644 A 2,250' DTL

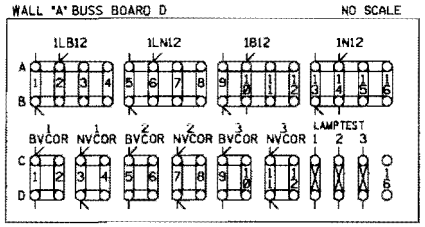

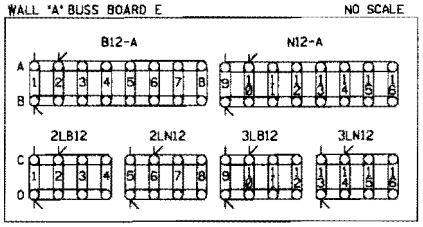

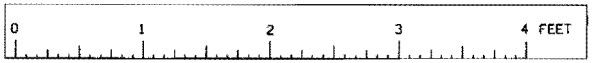

SCALE: 1.5 INCHES = 1 FOOT

NEW SHEET
WINFIELD, ILLINOIS
WINFIELD ROAD
M.P. 27.54
GENEVA SUBDIVISION
O.O.T.#174 964H

J 08-09-08 INSTALL HALF BLOCK SYSTEM FROM TURNER TO MP27.54, ILLINOIS. POWER & SWIT 1 (MP 25.52 TO MP 28.54) APE 88014 JJL/CTC/MDF

UNION PACIFIC SAFETY SIGNAL DESIGN

DES: CTC
DIG: CTC
CHK: JJL
A.F.E. 88014
ID: GEN2754.20X

UNION PACIFIC RAILROAD
CHICAGO, ILLINOIS TO CLINTON, IOWA
C.T.C. CIRCUITS
Office of Sr.AVP Engineering - Signal/TCO Omaha, Nebraska

DATE 08-09-08
SHEET 20
DWG 27.54
GEN

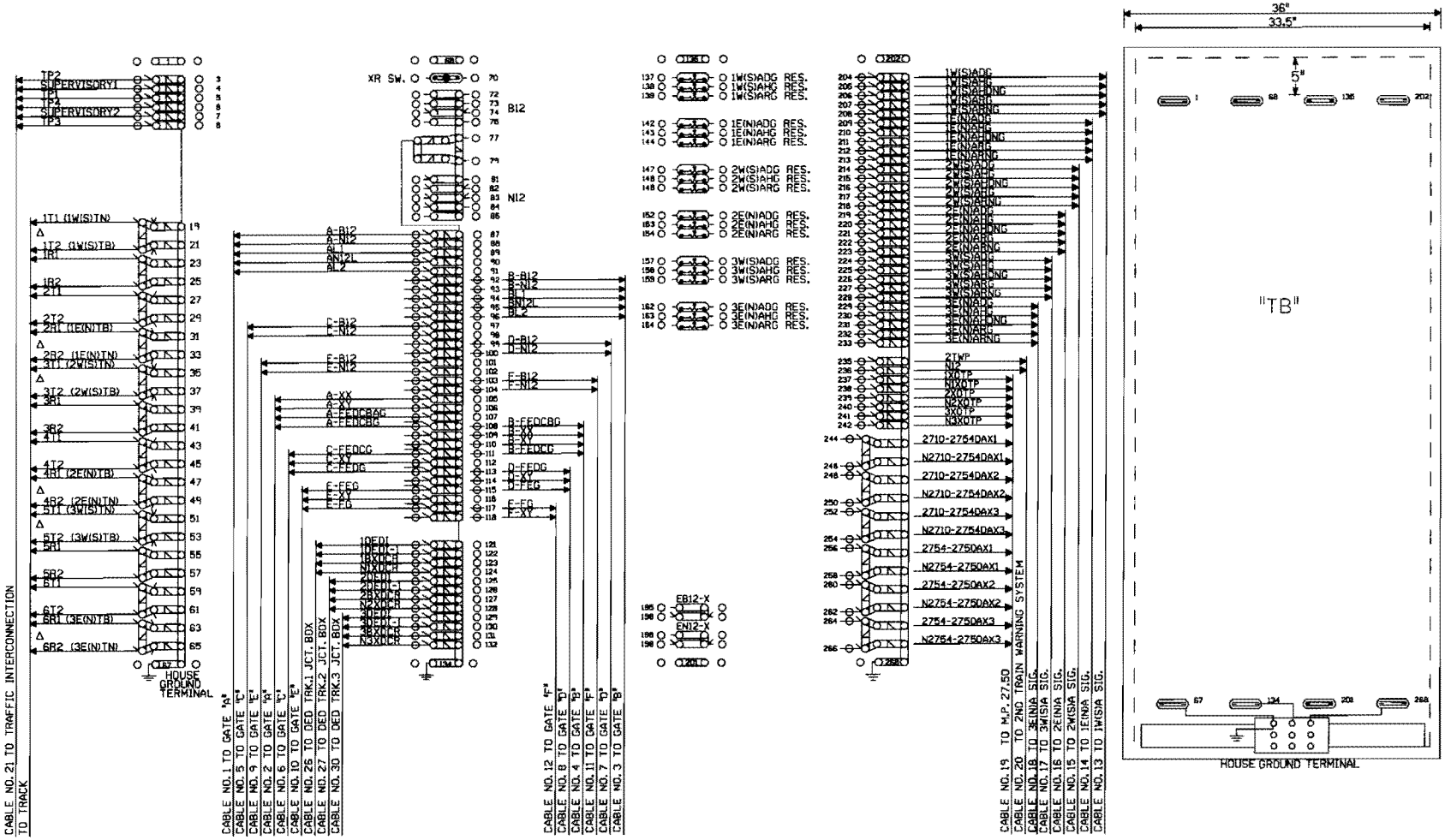

SEE SIGNAL STANDARD
DRAWING 84612OUP FOR
HOUSE GROUNDING SCHEME

Δ FIELD ENSURE PROPER TRACK POLARITY AND "AC" ACCORDINGLY

NEW SHEET
WINFIELD, ILLINOIS
WINFIELD ROAD
M.P. 27.54
GENEVA SUBDIVISION
D.D.T.#174 964H

1	06-09-08 INSTALL HALF BLOCK SYSTEM FROM TURNER TO PARK, ILLINOIS. PHASE I PART I MP. 25.50 TO MP. 25.54 AFE #88114	MODIFICATION LEVEL		UNION PACIFIC	DES: CTC	UNION PACIFIC RAILROAD	DATE 06-09-08
		D.A. LAST LEVEL CHECKED	DQ	QUALITY PRODUCTIVITY SAFETY	DIG: CTC	CHICAGO, ILLINOIS TO	SHEET 21
		LAST LEVEL MOD THIS TYPICAL	DQ	SIGNAL DESIGN	CHK: JJL	CLINTON, IOWA	DWG 27.54
		LAST LEVEL BY DESIGNER	DQ		A.F.E. 88114	C.T.C. CIRCUITS	GEN
		CHANGED FROM TYPICAL?	Y		ID= GEN2754.21X	Office of Sr AVP Engineering - Signal/TCO Omaha, Nebraska	
		BY 02/01/08 MICROEDS.15					

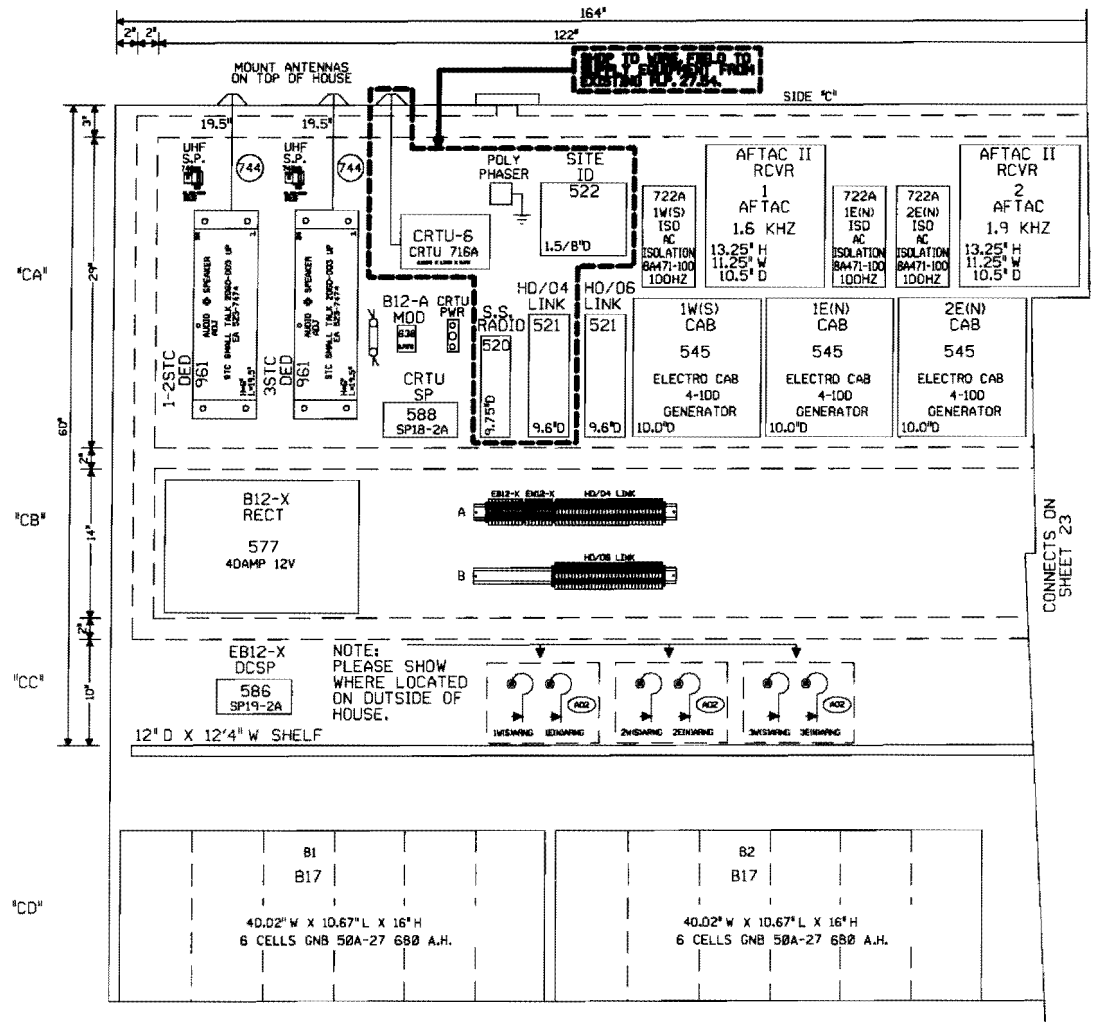

0 1 2 3 4 FEET

SCALE: 1.5 INCHES = 1 FOOT

NEW SHEET
WINFIELD, ILLINOIS
WINFIELD ROAD
M.P. 27.54
GENEVA SUBDIVISION
O.D.T.#174 964H

1 06-09-08 INSTALL HALF BLOCK SYSTEM FROM TURNER TO PARK, ILLINOIS. PHASE I PART I MP. 27.50 TO MP. 25.54 AFE #88114 J.J. /CTC/MCP	UNION PACIFIC QUALITY PRODUCTIVITY SAFETY SIGNAL DESIGN	DES: CTC DIG: CTC CHK: JJL A.F.E. 88114 ID: GEN2754.22X	UNION PACIFIC RAILROAD CHICAGO, ILLINOIS TO CLINTON, IOWA C.T.C. CIRCUITS Office of Sr.AVP Engineering - Signal/TCO Omaha, Nebraska	DATE 06-09-08 SHEET 22 DWG 27.54 GEN		

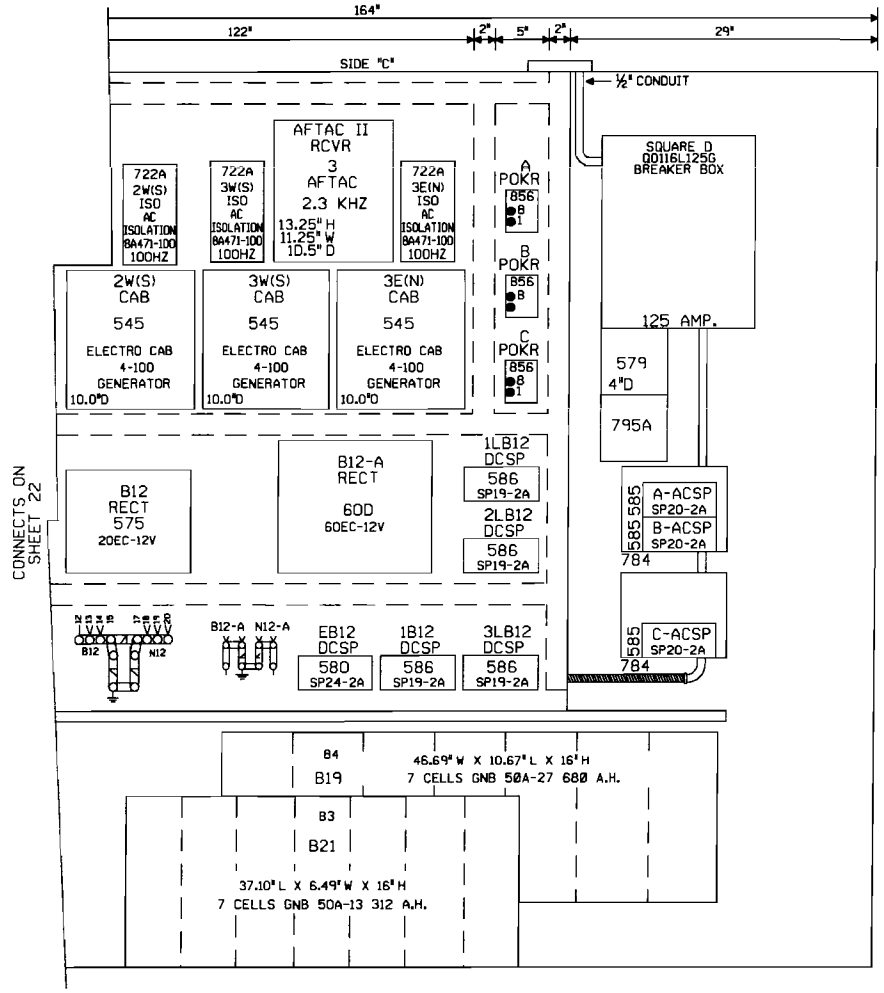

0 1 2 3 4 FEET

SCALE: 1.5 INCHES = 1 FOOT

NEW SHEET
WINFIELD, ILLINOIS
WINFIELD ROAD
M.P. 27.54
GENEVA SUBDIVISION
O.O.T.#174 964H

1 06-09-08 INSTALL HALF BLOCK SYSTEM FROM TURNER TO FARM, ILLINOIS. PHASE 1 PART 1 MP. 25.00 TO MP. 25.09 A.F.E. 98114 JJL /CTC/MOF	UNION PACIFIC QUALITY PRODUCTIVITY SAFETY SIGNAL DESIGN	DES: CTC DIG: CTC CHK: JJL A.F.E. 98114 ID: GEN2754.23X	UNION PACIFIC RAILROAD CHICAGO, ILLINOIS TO CLINTON, IOWA C.T.C. CIRCUITS Office of Sr.AVP Engineering - Signal/TCD Omaha, Nebraska	DATE 06-09-08 SHEET 23 DWG 27.54 GEN		