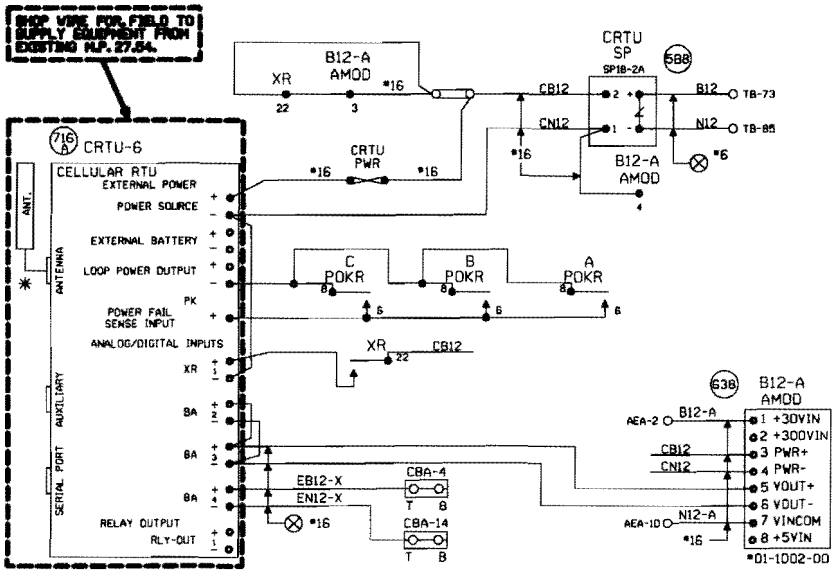

NOTE: REUSE EXISTING CRTU FROM RETIRED WINFIELD ROAD XING BUNGALOW.

NOTES:

ALL DIODES 1N5060 OR 1N4004 UNLESS OTHERWISE NOTED.

✱ MOUNT ANTENNA ON TOP OF HOUSE

ALL WIRES #18 UNLESS OTHERWISE NOTED.

ALL UNUSED 'NC' INPUTS MUST BE TIED HIGH TO BATTERY

ALL UNUSED ANALOG INPUTS MUST BE TIED HIGH TO BATTERY

ALL UNUSED 'NO' INPUTS MUST BE DISCONNECTED

ANALOG AND AC INPUT MODULES MUST BE MOUNTED LESS THAN 12" FROM CRTU

MOUNT CRTU AT LEAST 18" AWAY FROM HIGH VOLTAGE POWER SOURCES

CRTU FRONT PANEL DISPLAY CHART INDICATES NORMAL STATE

■ DIGITAL INPUT HIGH, OR POWER FAIL INPUT CLOSED

□ DIGITAL INPUT LOW, OR POWER FAIL INPUT OPEN

UNIT SETUP

R.R. SITE ID WHERE; SSSS = 4 CHARACTER SUBDIVISION ID.
THE SUBDIVISION ID* IS IN THE CURRENT TIMETABLE.
FILL WITH PRECEDING ZEROS AS REQUIRED.
LLLLLLLL = 8 CHARACTERS FOR DOT*, MP*, CP*, OR HBO NAME.
THE DOT* MUST NOT USE DASHES TO SEPARATE NUMBERS.
THE MP* MUST USE A DECIMAL POINT TO SEPARATE NUMBERS.
FILL WITH PRECEDING DASHES AS REQUIRED.
AA = 2 CHARACTER STATE NAME.
MUST BE 14 CHARACTERS LONG. FILL EACH FIELD WITH PRECEDING ZEROS OR DASHES AS REQUIRED, AND NO SPACES ALLOWED.

SITE IDENTIFIER: SSSSLLLLLLLLAA	0001-174964HIL
SERIAL NUMBER (FACTORY SET)	
ALARM DEFER DELAY	2880 MINUTES (48 HOURS)
SILENCE INTERVAL	60 MINUTES
HEALTHCHECK INTERVAL	AUTO, ONCE A DAY IF NO OTHER ACTIVITY OCCURS
CONFIGURATION	MICROBURST
OPERATION TO RESUME: RUN	
CALIBRATION CONSTANT	
CH2	
CH3	
CH4	
POWER SOURCE	

FIELD TO PROVIDE VALUES FOR: SAMPLED NOMINAL VOLTAGES, CALIBRATION CONSTANTS, AND CRTU SERIAL NUMBER.

CHANNEL SETUP - STANDARD CONFIGURATION 17:XR,BA,BA,BA

CHANNEL NORMAL STATE	SENSE (NO/NC)	NAME FUNCTION	RECOGNITION DELAY SECONDS ACTIVE	RECOGNITION DELAY SECONDS NORMAL	RETURN TO NORMAL	REPORTING MODE	ALARM LINKED CHANNEL	ALARM LINKED CRITERIA	EVENT LOGGING ENABLED OPTIONS
POWER FAIL (CH5) ■	POWER FAIL DETECT NO	PF$_{1/3}$-PK AC POWER FAIL	7,200 ALARM	300 NORMAL	ENABLED	ALERT	DISABLED	N/A	INPUT STATUS COMMUNICATION
									ANALOG VALUE
CH1 ■	DIGITAL INPUT NO	CH1-XR XR DOWN TO LONG	1,800 ALARM	1 NORMAL	ENABLED	ALERT	DISABLED	N/A	
CH2	ANALOG INPUT N/A	CH2-BA/V GATES NOT UP/DOWN LIGHT OUT BATTERY LOW	300 ALARM	300 NORMAL	DISABLED	ALERT	DISABLED	N/A	
CH3	ANALOG INPUT N/A	CH3-BA/V BATTERY MONITOR BATTERY LOW	300 ALARM	300 NORMAL	DISABLED	ALERT	DISABLED	N/A	
CH4	ANALOG INPUT N/A	CH4-BA/V BATTERY MONITOR BATTERY LOW	300 ALARM	300 NORMAL	DISABLED	ALERT	DISABLED	N/A	
POWER SOURCE (CH6)	ANALOG INPUT N/A	PS-BA/V BATTERY MONITOR BATTERY LOW	300 ALARM	300 NORMAL	DISABLED	ALERT	DISABLED	N/A	

ANALOG CHANNEL	USEFUL RANGE VOLTS LOW	USEFUL RANGE VOLTS HIGH	DISPLAYED RANGE VOLTS LOW	DISPLAYED RANGE VOLTS HIGH	RELATIVE ALARM POINT LOW	RELATIVE ALARM POINT HIGH	ABSOLUTE ALARM POINT LOW	ABSOLUTE ALARM POINT HIGH	AUTOMATIC UPDATE INTERVAL	STORED NOMINAL VOLTAGE	SAMPLED NOMINAL VOLTAGE
CH2	0.0	30.00	0.0	30.00	81%	120%	10.0	20.0	2 DAYS	12.69	
CH3	0.0	30.00	0.0	30.00	81%	120%	10.0	20.0	2 DAYS	12.69	
CH4	0.0	30.00	0.0	30.00	81%	120%	10.0	20.0	2 DAYS	12.69	
POWER SOURCE	0.0	30.00	0.0	30.00	81%	120%	10.0	20.0	2 DAYS	12.69	

RELAY OUTPUT	NAME	ACTIVE	NORMAL	PULSE DURATION	
	RLY-OUT	SET-UP-OPEN	CLR-ON-CLOSE	15 SECONDS	CHARTS REV'D 9-21-00

MAINTENANCE OPERATIONS

TO START OR ABORT ANY PROCEDURE

1. PRESS THE 'CANCEL' BUTTON FIRST

WHEN RESPONDING TO A CALL, PUT THE CRTU IN THE 'SILENCE ALARMS' MODE

1. PRESS THE 'SELECT' BUTTON.
   DISPLAY: ACTION?
2. PRESS THE '+ ARROW' BUTTON UNTIL
   DISPLAY: ACTION? SILENCE ALARMS
3. PRESS THE 'SELECT' BUTTON TWICE
4. CORRECT PROBLEM AND SIMULATE NORMAL TRAIN MOVEMENT THROUGH THE LOCATION
5. EXAMINE EACH CHANNEL ON THE CRTU
6. PRESS THE '+/- ARROW' BUTTON
   VERIFY ALL CHANNELS ARE NORMAL

   THE CRTU WILL AUTOMATICALLY RE-ENTER THE 'RUN MODE' IN 60 MINUTES

RESET RECOGNITION & ALARM DEFER DELAY TIMERS

1. PRESS 'CANCEL', THEN PRESS 'SELECT' TWICE
   DISPLAY: SET MODE:
2. PRESS THE '- ARROW' BUTTON UNTIL
   DISPLAY: SET MODE: OFFLINE-SLEEPING
3. PRESS THE 'SELECT' BUTTON FOUR TIMES.
   DISPLAY: RUN MODE, OR RUN MODE-SILENT

TO CANCEL THE 'SILENCE ALARMS' MODE

1. PRESS THE 'SELECT' BUTTON.
   DISPLAY: ACTION?
2. PRESS THE '+ ARROW' BUTTON UNTIL
   DISPLAY: ACTION? CANCEL SILENCE
3. PRESS THE 'SELECT' BUTTON

EXAMINE & SET BATTERY VOLTAGE NOMINAL VALUE

1. PRESS THE '+ ARROW' OR '- ARROW' BUTTON UNTIL THE DESIRED CHANNEL IS DISPLAYED.
   DISPLAY: PS-BA: 13.83V NORMAL
2. VERIFY THE DISPLAYED READING WITH A DIGITAL VOLTMETER
3. PRESS THE 'SELECT' BUTTON, AND THE CRTU DISPLAY WILL SWITCH BETWEEN CURRENT/SAVED NOMINAL VOLTAGE VALUES.
   DISPLAY: NOMINAL ON #52 (CURRENT) 13.83
   DISPLAY: SAVED NOMINAL 6 (STORED) 12.69
4. PRESS THE 'SELECT' BUTTON AND THE CURRENT OR 'NOMINAL ON' VALUE WILL BE SAMPLED AND STORED AS THE 'SAVED NOMINAL' VALUE
5. VERIFY THE 'NOMINAL ON' AND 'SAVED NOMINAL' VALUES ARE EQUIVALENT. REPEAT STEPS #1 THRU #3 & PRESS THE 'CANCEL' BUTTON.

NEW SHEET
WINFIELD, ILLINOIS
WINFIELD ROAD
M.P. 27.54
GENEVA SUBDIVISION
D.O.T.#174 964H

08-09-08 INSTALL HALF SLEEP SYSTEM FROM TUNNEL TO TRAIL SIDING PHASE I (PART 1) (MP. 26.63) AFE #88114	
UNION PACIFIC SAFETY SIGNAL DESIGN	
DES: CTC	
DIG: CTC	
CHK: JJL	
A.F.E. 88114	
ID: GEN2754.2AX	

UNION PACIFIC RAILROAD

CHICAGO, ILLINOIS TO CLINTON, IOWA
C.T.C. CIRCUITS

Office of Sr VP Engineering - Signal/TCO Omaha, Nebraska

DATE	08-09-08
SHEET	2A
DWG	27.54
	GEN

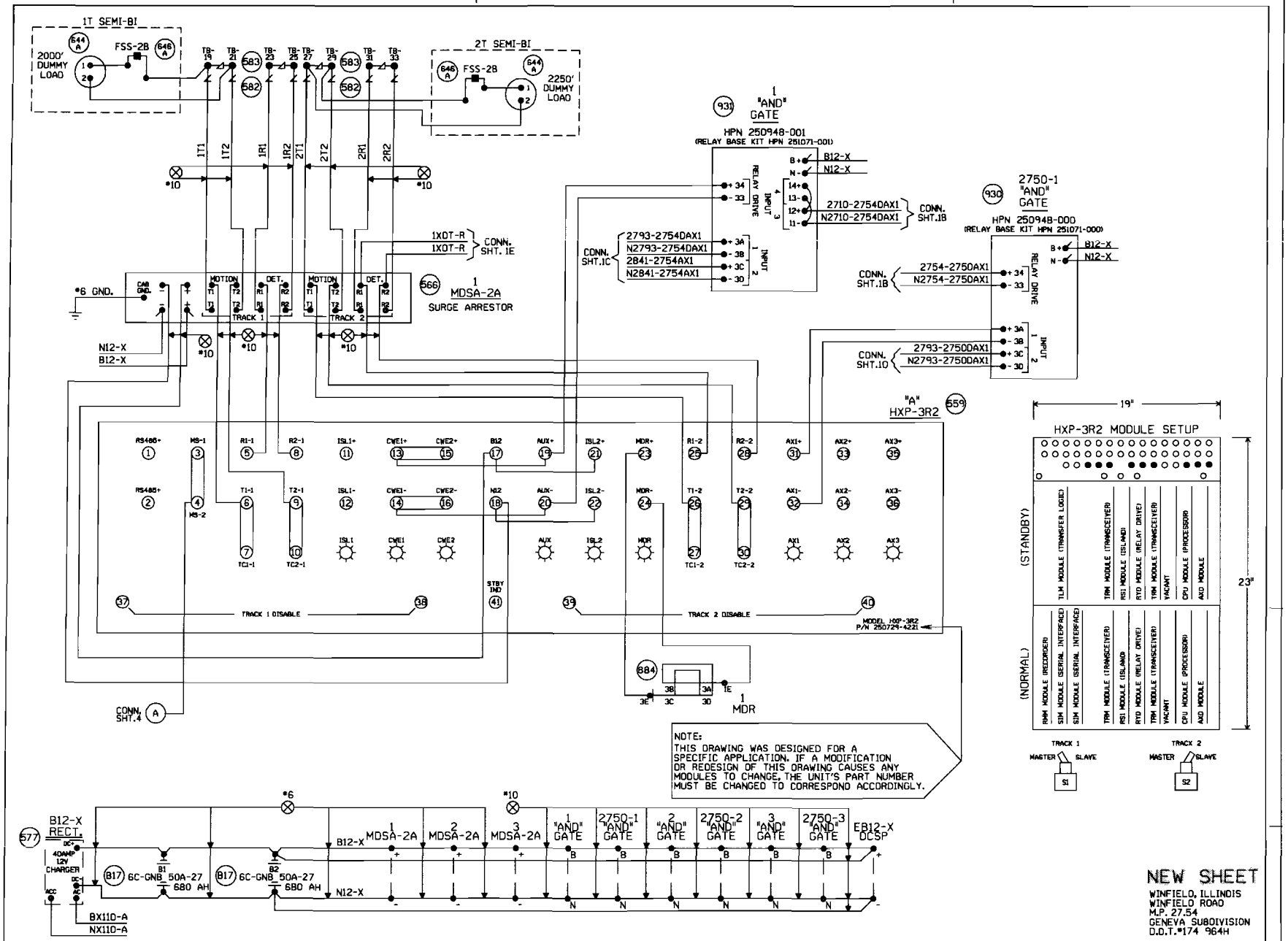
1T SEMI-BI
2000' DUMMY LOAD
FSS-2B
2T SEMI-BI
2250' DUMMY LOAD
1 "AND" GATE
HPN 250948-001
(RELAY BASE KIT HPN 251071-001)
2750-1 "AND" GATE
HPN 250948-000
(RELAY BASE KIT HPN 251071-000)
1 MDSA-2A SURGE ARRESTOR
TRACK 1
TRACK 2
MOTION DET.
*6 GND.
N12-X
B12-X
1XOT-R
CONN. SHT. 1E
CONN. SHT.1C
CONN. SHT.1B
CONN. SHT.1D
CONN. SHT.4
"A" HXP-3R2
TRACK 1 DISABLE
TRACK 2 DISABLE
MODEL HXP-3R2 P/N 250729-4221
1 MDR
HXP-3R2 MODULE SETUP
19"
23"
(STANDBY)
(NORMAL)
TLM MODULE (TRANSFER LOGIC)
TRM MODULE (TRANSCEIVER)
RSI MODULE (ISLAND)
RTD MODULE (RELAY DRIVE)
VACANT
CPU MODULE (PROCESSOR)
AXD MODULE
RMM MODULE (RECORDER)
SIM MODULE (SERIAL INTERFACE)
TRACK 1
TRACK 2
MASTER
SLAVE
S1
S2
NOTE:
THIS DRAWING WAS DESIGNED FOR A SPECIFIC APPLICATION. IF A MODIFICATION OR REDESIGN OF THIS DRAWING CAUSES ANY MODULES TO CHANGE, THE UNIT'S PART NUMBER MUST BE CHANGED TO CORRESPOND ACCORDINGLY.
B12-X RECT.
40AMP 12V CHARGER
6C-GNB_50A-27 680 AH
BX110-A
NX110-A
EB12-X DCSP
NEW SHEET
WINFIELD, ILLINOIS
WINFIELD ROAD
M.P. 27.54
GENEVA SUBDIVISION
D.O.T.#174 964H
UNION PACIFIC RAILROAD
CHICAGO, ILLINOIS TO CLINTON, IOWA
C.T.C. CIRCUITS
Office of Sr. AVP Engineering - Signal/TCO Omaha, Nebraska
MODIFICATION LEVEL
Q.A. LAST LEVEL CHK'D. DD
LAST LEVEL MOD. THIS TYP. DB
LAST LEVEL BY DESIGNER. DQ
CHANGED FROM TYP.? Y/N Y
UNION PACIFIC
SIGNAL DESIGN
DES: CTC
DIG: CTC
CHK: JJL
A.F.E. 88114
ID: GEN2754.3X
DATE 06-09-08
SHEET 3
DWG 27.54
GEN
(REV. 01.02.21) (HX32TKUG.4)

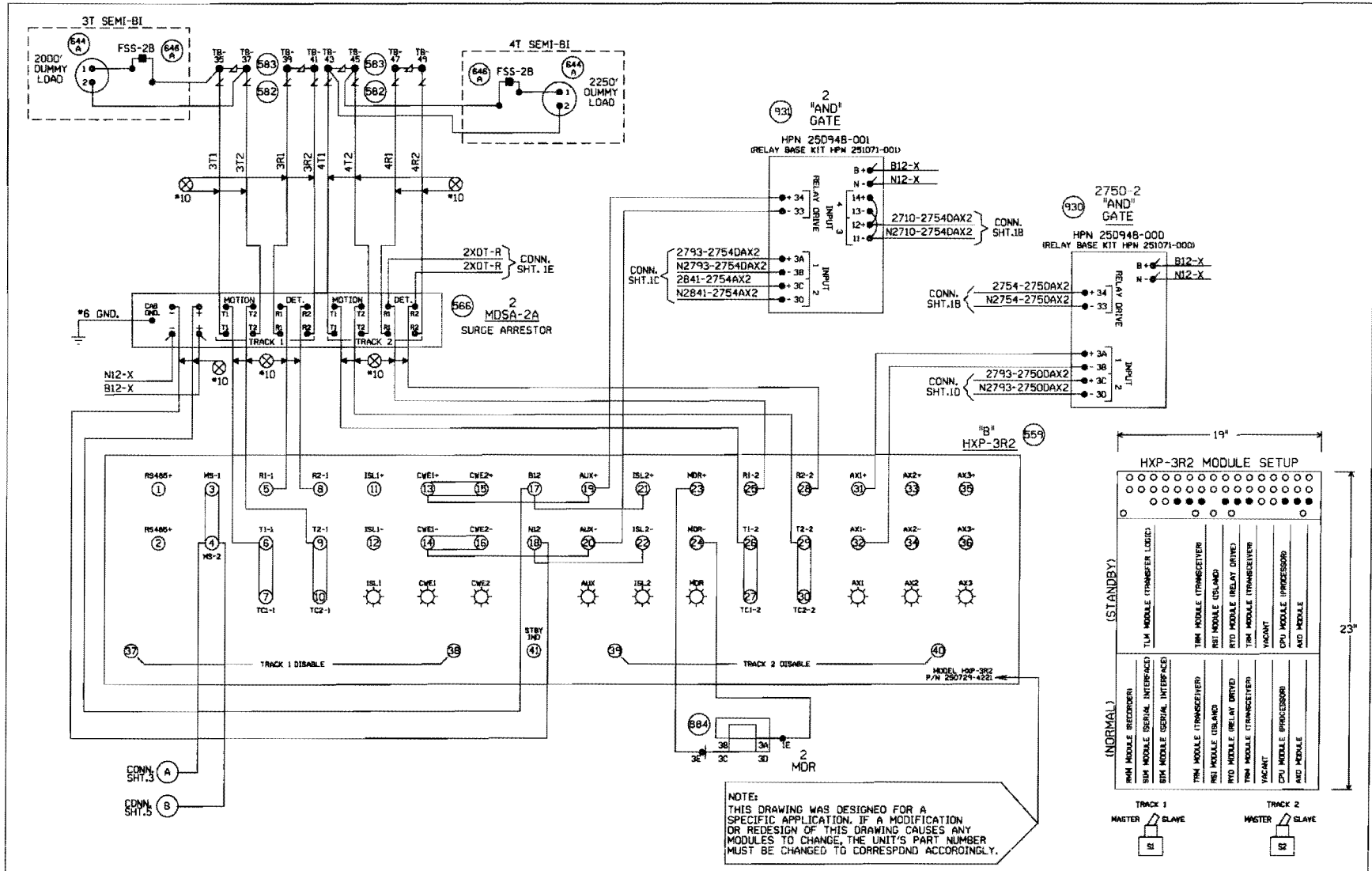

NOTE:
THIS DRAWING WAS DESIGNED FOR A SPECIFIC APPLICATION. IF A MODIFICATION OR REDESIGN OF THIS DRAWING CAUSES ANY MODULES TO CHANGE, THE UNIT'S PART NUMBER MUST BE CHANGED TO CORRESPOND ACCORDINGLY.

NEW SHEET
WINFIELD, ILLINOIS
WINFIELD ROAD
M.P. 27.54
GENEVA SUBDIVISION
D.O.T.#174 964H

1 06-09-08 INSTALL NALF BLOCK SYSTEM FROM TURNER TO PARK, ILLINOIS. PHASE I PART I (MP. 29.50 TO MP. 25.54) AFE #88114 JJL /CTC/MDF	MODIFICATION LEVEL		UNION PACIFIC SIGNAL DESIGN	DES: CTC	UNION PACIFIC RAILROAD
	Q.A. LAST LEVEL CHK'D.	DD		DIG: CTC	CHICAGO, ILLINOIS TO CLINTON, IOWA C.T.C. CIRCUITS
	LAST LEVEL MOD. THIS TYP.	DB		CHK: JJL	DATE 06-09-08
	LAST LEVEL BY DESIGNER.	DQ		A.F.E. 88114	SHEET 4
	CHANGED FROM TYP.? Y/N	Y		ID: GEN2754.4X	DWG 27.54 GEN

Office of Sr AVP Engineering - Signal/TCD Omaha, Nebraska

(REV. 01.02.21) (HX32TKUG.5)

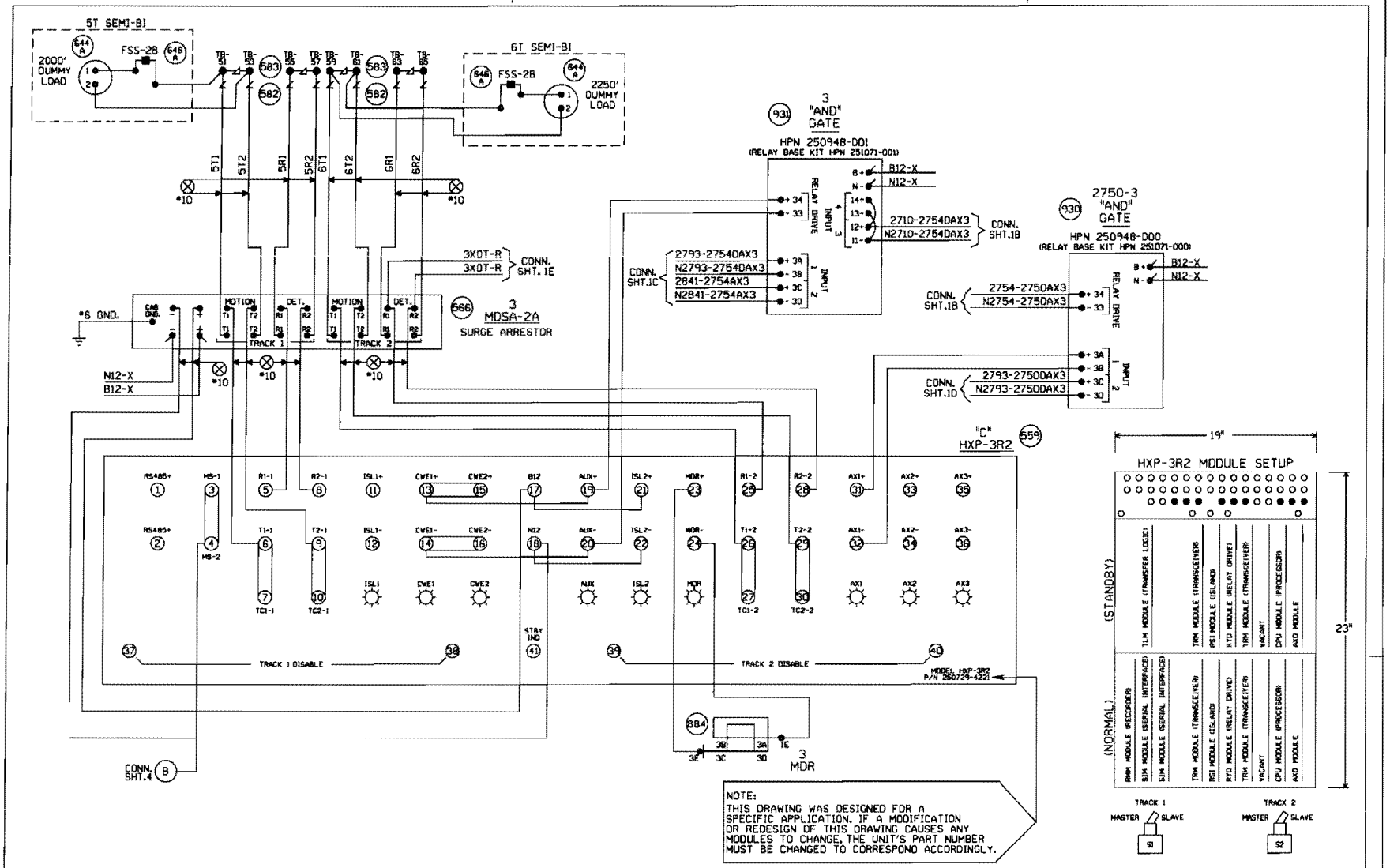

NOTE:
THIS DRAWING WAS DESIGNED FOR A SPECIFIC APPLICATION. IF A MODIFICATION OR REDESIGN OF THIS DRAWING CAUSES ANY MODULES TO CHANGE, THE UNIT'S PART NUMBER MUST BE CHANGED TO CORRESPOND ACCORDINGLY.

NEW SHEET
WINFIELD, ILLINOIS
WINFIELD ROAD
M.P. 27.54
GENEVA SUBDIVISION
O.D.T.#174 964H

MODIFICATION LEVEL	
Q.A. LAST LEVEL CHK'D.	DD
LAST LEVEL MOD. THIS TYP.	DB
LAST LEVEL BY DESIGNER.	DQ
CHANGED FROM TYP.? Y/N	Y

UNION PACIFIC
SAFETY
SIGNAL DESIGN

DES: CTC
DIG: CTC
CHK: JJL
A.F.E. 88114
ID: GEN2754.5X

UNION PACIFIC RAILROAD
CHICAGO, ILLINOIS TO CLINTON, IOWA
C.T.C. CIRCUITS
Office of Sr AVP Engineering - Signal/TCO Omaha, Nebraska

DATE 06-09-08
SHEET 5
DWG 27.54
GEN

(REV. 01.02.21) (HX32TKUG.5)

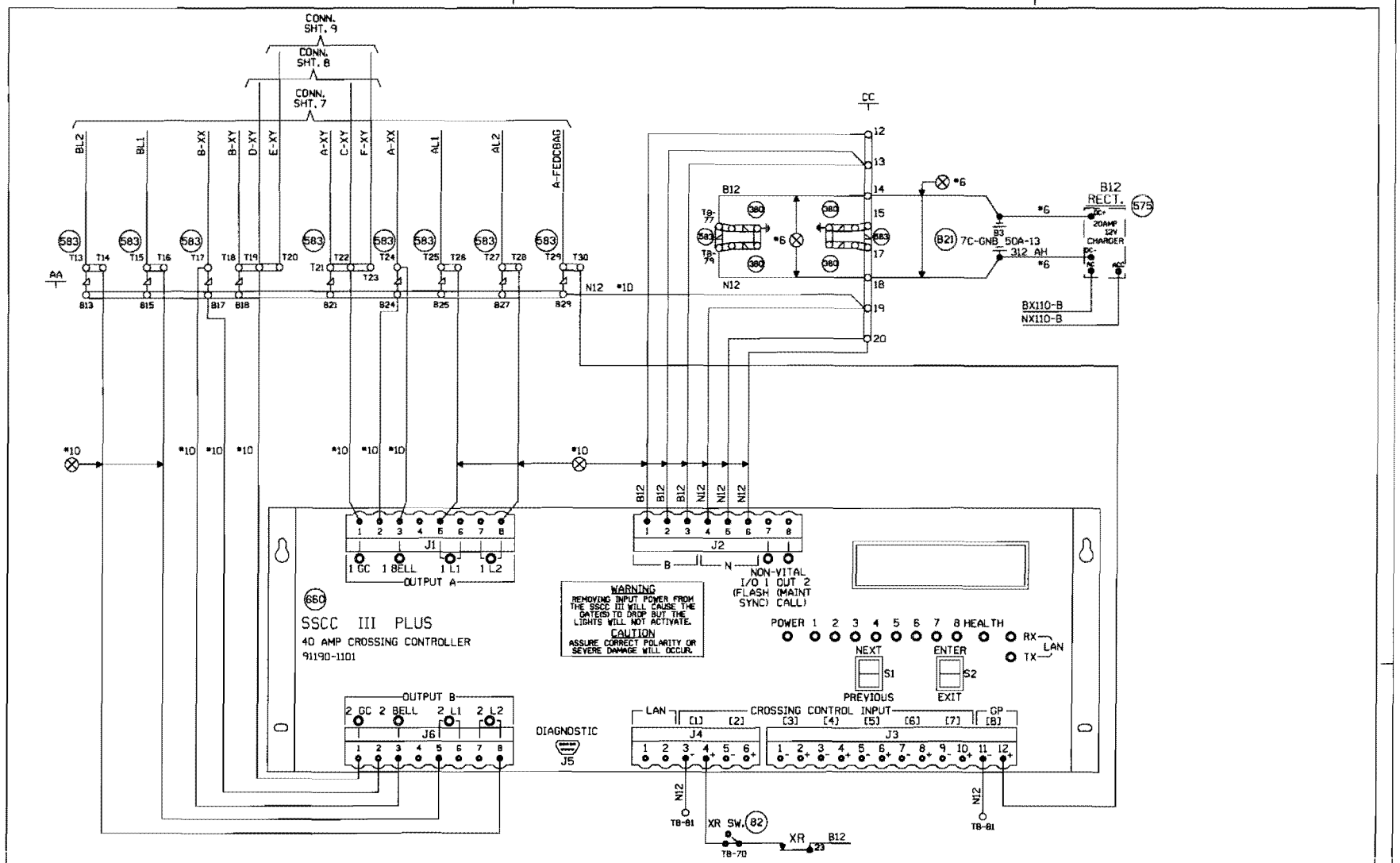

11 08-09-08 INSTALL HALF BLOCK SYSTEM FROM TURNER TO PARK, ILLINOIS. PHASE I PART 2 (MP. 26.50 TO MP. 28.84) AFE #88014 JJL /CTC/MCF	MODIFICATION LEVEL		UNION PACIFIC QUALITY PRODUCTIVITY SAFETY SIGNAL DESIGN	DES: CTC	UNION PACIFIC RAILROAD	DATE 08-09-08
	Q.A. LAST LEVEL CHK'D.	DH		DIG: CTC	CHICAGO, ILLINOIS TO CLINTON, IOWA	SHEET 6
	LAST LEVEL MOD. THIS TYP.	DH		CHK: JJL	C.T.C. CIRCUITS	DWG 27.54
	LAST LEVEL BY DESIGNER.	DQ		A.F.E. 88014	Office of Sr AVP Engineering - Signal/TCO Omaha, Nebraska	GEN
	CHANGED FROM TYP.? Y/N	Y		ID= GEN2754.6X		

(REV. 01.01.04) (SSCCGF.5)

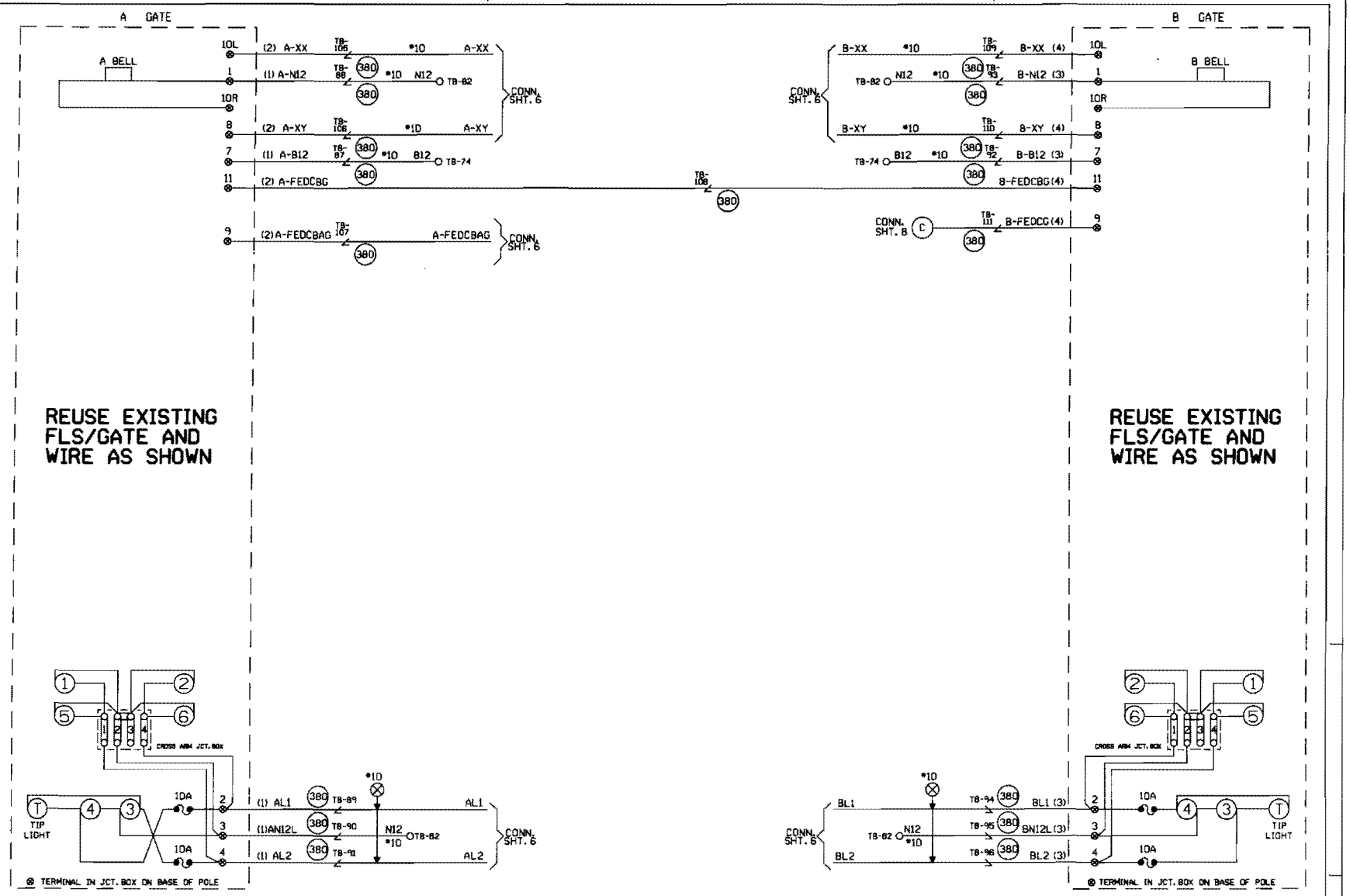

CABLE TABULATION

CABLE NO. 1 5C. NO.6 U.G.B.T.
CABLE NO. 2 7C. NO.14 U.G.B.T.
CABLE NO. 3 5C. NO.6 U.G.B.T.
CABLE NO. 4 7C. NO.14 U.G.B.T.

NEW SHEET

WINFIELD, ILLINOIS
WINFIELD ROAD
M.P. 27.54
GENEVA SUBDIVISION
D.O.T.#174 964H

1	06-09-08 INSTALL HALF BLOCK SYSTEM FROM TURNER TO PARK, ILLINOIS. PHASE I PART I MP. 29.00 TO MP. 28.54 AFE 88114	MODIFICATION LEVEL		UNION PACIFIC SAFETY SIGNAL DESIGN	DES: CTC	UNION PACIFIC RAILROAD	DATE 06-09-08
		D.A. LAST LEVEL CHECKED	DQ		DIG: CTC	CHICAGO, ILLINOIS TO CLINTON, IOWA C.T.C. CIRCUITS	SHEET 7
		LAST LEVEL MOD THIS TYPICAL	DQ		CHK: JJL		DWG 27.54
		LAST LEVEL BY DESIGNER	DQ		A.F.E. 88114		GEN
		CHANGED FROM TYPICAL?	Y		ID: GEN2754.7X	Office of Sr AVP Engineering - Signal/TCO Omaha, Nebraska	

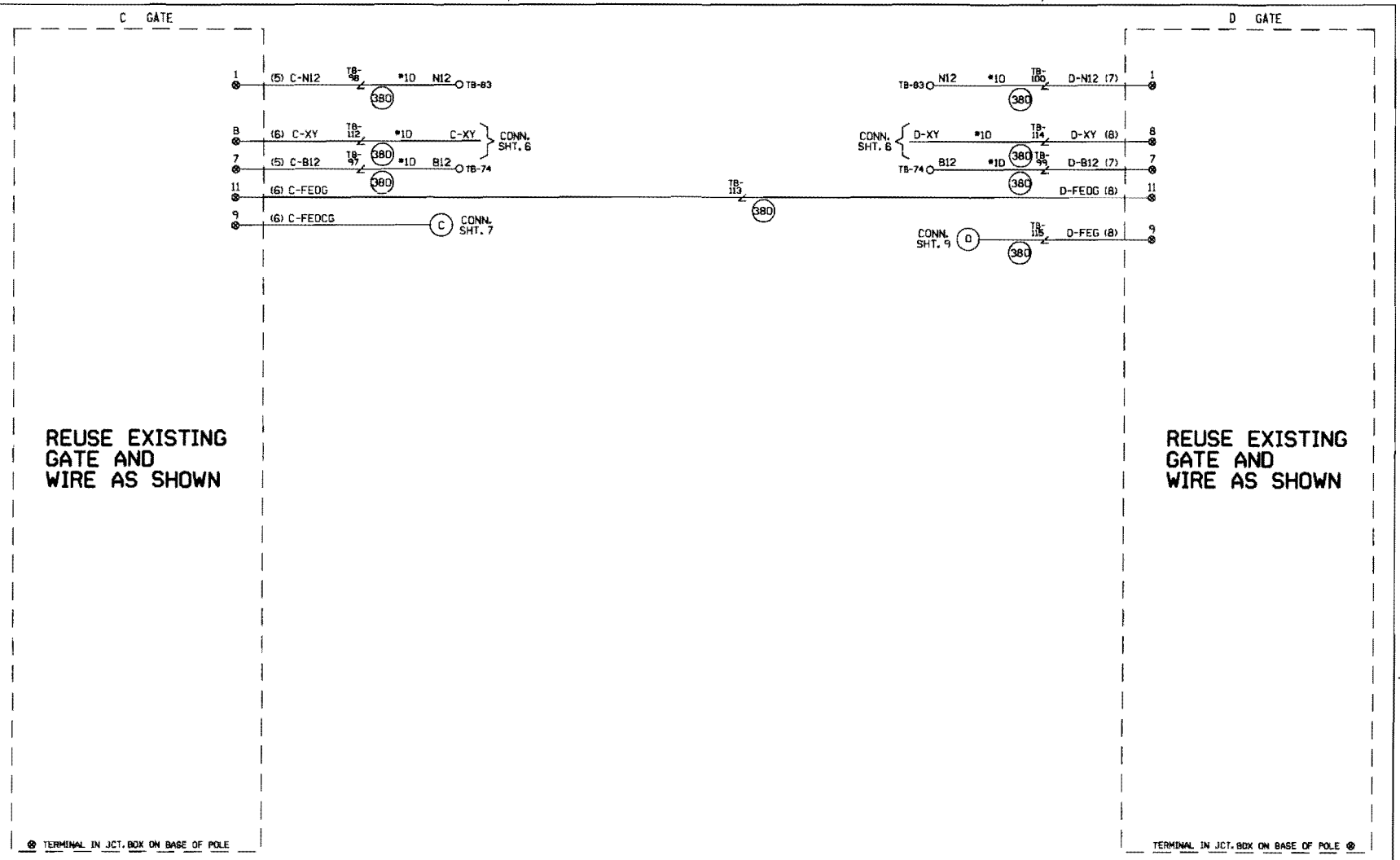

CABLE TABULATION

CABLE NO. 5 5C. NO.6 U.G.B.T.
CABLE NO. 6 7C. NO.14 U.G.B.T.
CABLE NO. 7 5C. NO.6 U.G.B.T.
CABLE NO. 8 7C. NO.14 U.G.B.T.

NEW SHEET

WINFIELD, ILLINOIS
WINFIELD ROAD
M.P. 27.54
GENEVA SUBDIVISION
D.O.T.#174 964H

1	06-09-08 INSTALL HALF BLOCK SYSTEM FROM TURNER TO PARK ILLINOIS PHASE 1 PART 1 MP. 25.30 TO MP. 28.59 SEE TABULATION JJL /CTC/MOY	MODIFICATION LEVEL		UNION PACIFIC SAFETY PRODUCTIVITY QUALITY SIGNAL DESIGN	DES: CTC	UNION PACIFIC RAILROAD	DATE 06-09-08
		O.A. LAST LEVEL CHECKED	DO		DIG: CTC	CHICAGO, ILLINOIS TO CLINTON, IOWA	SHEET 8
		LAST LEVEL MOD THIS TYPICAL	DO		CHK: JJL	C.T.C. CIRCUITS	DWG 27.54
		LAST LEVEL BY DESIGNER	DO		A.F.E. 88114	Office of Sr AVP Engineering - Signal/TCO Omaha, Nebraska	GEN
		CHANGED FROM TYPICAL?	Y		ID: GEN2754.8X		

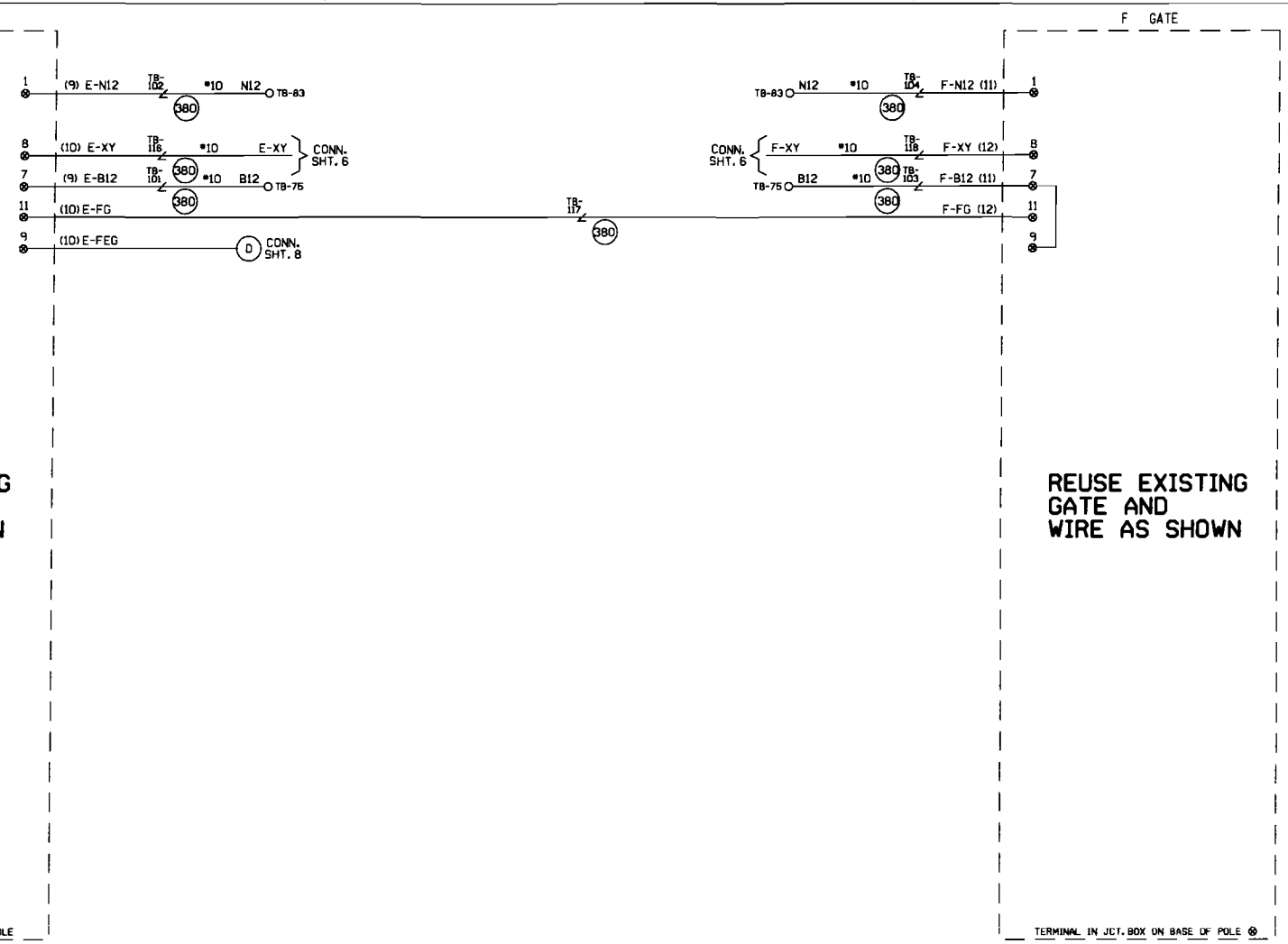

CABLE TABULATION

CABLE NO. 9 5C. NO.6 U.G.B.T.
CABLE NO.10 7C. NO.14 U.G.B.T.
CABLE NO.11 5C. NO.6 U.G.B.T.
CABLE NO.12 7C. NO.14 U.G.B.T.

NEW SHEET
WINFIELD, ILLINOIS
WINFIELD ROAD
M.P. 27.54
GENEVA SUBDIVISION
D.O.T.#174 964H

11	06-09-08 INSTALL HALF BLOCK SYSTEM FROM TURNER TO FARM ILLINOIS. CHANGE 1 POST T. MP. 25.80 TO MP. 25.541 APE 98814	MODIFICATION LEVEL		UNION PACIFIC	DES: CTC	UNION PACIFIC RAILROAD	DATE 06-09-08
		Q.A. LAST LEVEL CHECKED	DQ	QUALITY PRODUCTIVITY SAFETY	DIG: CTC	CHICAGO, ILLINOIS TO CLINTON, IOWA	SHEET 9
		LAST LEVEL MOD THIS TYPICAL	DQ		CHK: JJL	C.T.C. CIRCUITS	DWG 27.54
		LAST LEVEL BY DESIGNER	DQ		A.F.E. 88114		GEN
		CHANGED FROM TYPICAL?	Y	SIGNAL DESIGN	ID= GEN2754.9X	Office of Sr AVP Engineering - Signal/TCD Omaha, Nebraska	

SAFETRAN PRODUCTS MODEL "S-20" MECHANISM

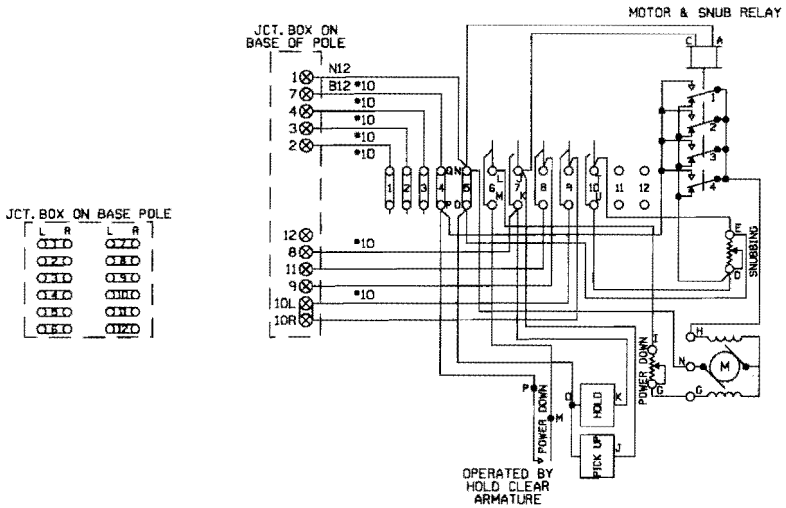

CONT. SPACE NO.	CLEARING (UP)		RETURNING (DN.)		FUNCTION OF CONTACT
	CLOSES	OPENS	CLOSES	OPENS	
6	45°	—	—	45°	POWER DOWN
7	—	89°	89°	—	POWER UP
8	83°	—	—	83°	FLASHING LIGHT (SPARE)
9	5°	—	—	5°	BELL (SPARE)
10	—	5°	5°	—	HORIZONTAL SNUB

MECHANISM SHOWN IN CLEAR POSITION.

INSTALLED

FIELD PLEASE VERIFY GATE MECH. WIRING AND AC PLAN ACCORDINGLY.

FOR WIRING GATES "A" & "B"

REDRAWN
WINFIELD, ILLINOIS
WINFIELD ROAD
M.P. 27.54
GENEVA SUBDIVISION
D.O.T.#174 964H

U 06-09-08 INSTALL SNUB BLOCK SYSTEM FROM TURNER TO PARK, ILLINOIS. PHASE 1 PART 1 SHT. 20,30 TO 40, 25,26 AFE 88114 J.D. /CTC/MDF	UNION PACIFIC SAFETY PRODUCTIVITY INTEGRITY SIGNAL DESIGN	DES: CTC DIG: CTC CHK: JJL A.F.E. 88114 ID: GEN2754.10X	UNION PACIFIC RAILROAD CHICAGO, ILLINOIS TO CLINTON, IOWA C.T.C. CIRCUITS Office of Sr AVP Engineering - Signal/TCO Omaha, Nebraska	DATE 06-09-08 SHEET 10 DWG 27.54 GEN		

(REV. 4-26-00) (GWIRING.DGN)

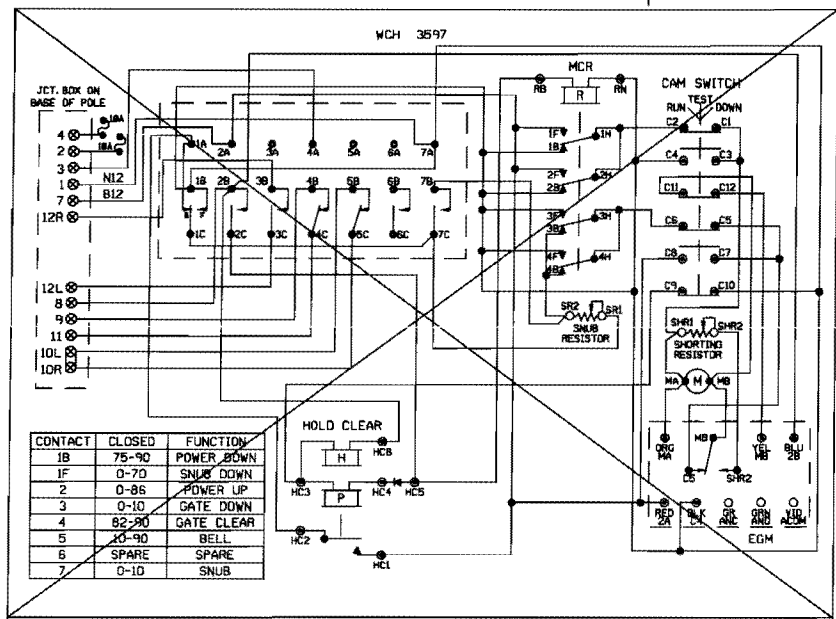

CONTACT	CLOSED	FUNCTION
1B	75-90	POWER DOWN
1F	0-70	SNUB DOWN
2	0-86	POWER UP
3	0-10	GATE DOWN
4	82-90	GATE CLEAR
5	10-90	BELL
6	SPARE	SPARE
7	0-10	SNUB

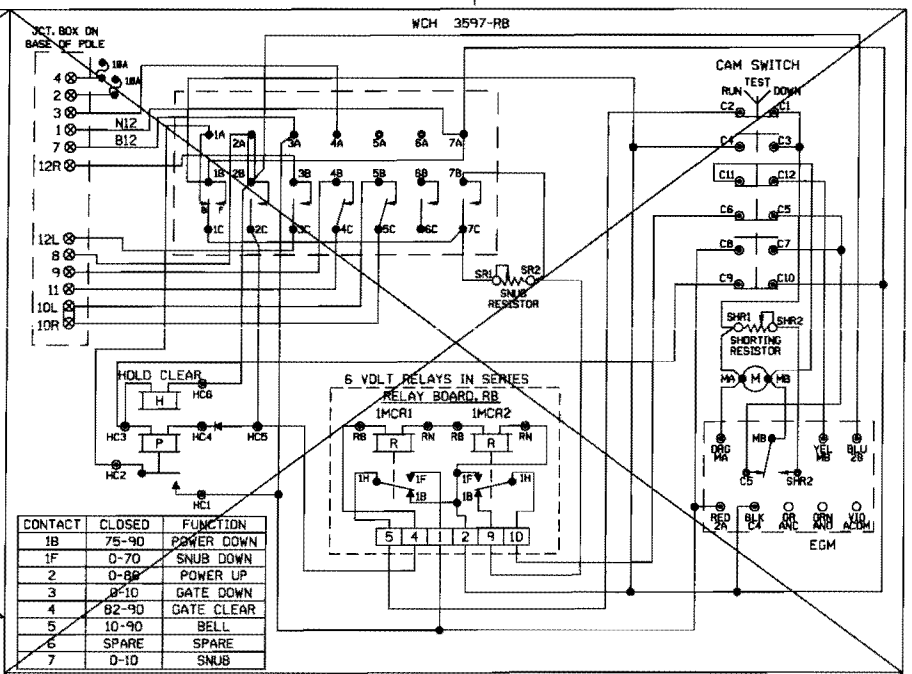

CONTACT	CLOSED	FUNCTION
1B	75-90	POWER DOWN
1F	0-70	SNUB DOWN
2	0-86	POWER UP
3	0-10	GATE DOWN
4	82-90	GATE CLEAR
5	10-90	BELL
6	SPARE	SPARE
7	0-10	SNUB

INSTALLED

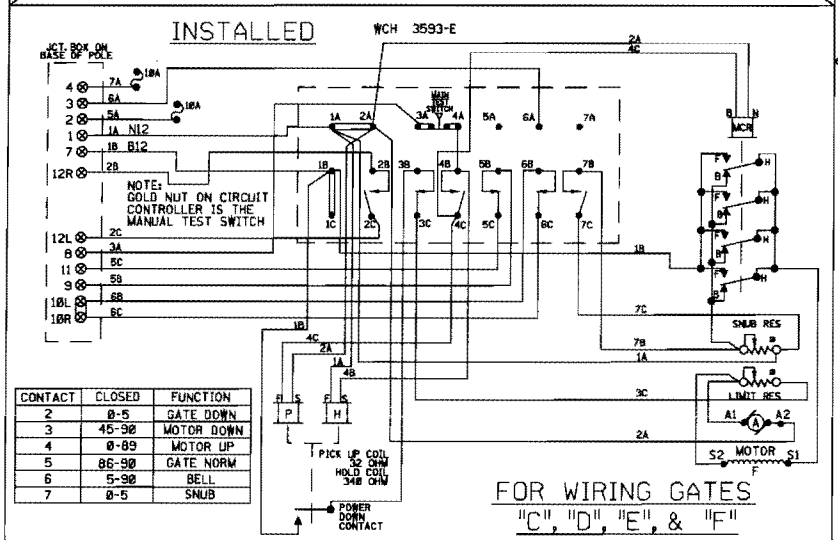

CONTACT	CLOSED	FUNCTION
2	0-5	GATE DOWN
3	45-90	MOTOR DOWN
4	0-89	MOTOR UP
5	86-90	GATE NORM
6	5-90	BELL
7	0-5	SNUB

FOR WIRING GATES
"C", "D", "E", & "F"

TYPICAL JCT. BOX BASE ON POLE

ALL MECHANISM SHOWN IN CLEAR POSITION

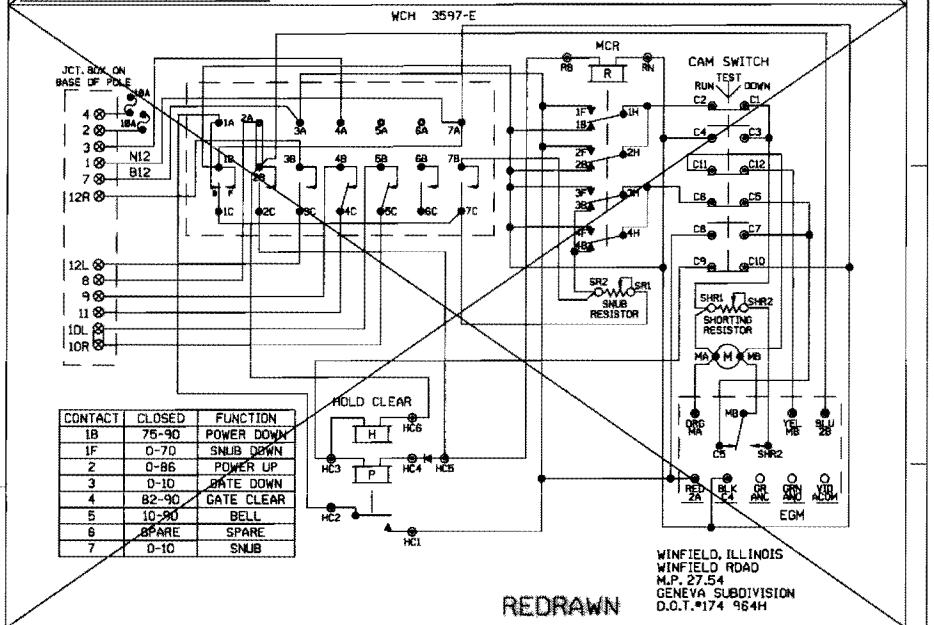

CONTACT	CLOSED	FUNCTION
1B	75-90	POWER DOWN
1F	0-70	SNUB DOWN
2	0-86	POWER UP
3	0-10	GATE DOWN
4	82-90	GATE CLEAR
5	10-90	BELL
6	SPARE	SPARE
7	0-10	SNUB

WINFIELD, ILLINOIS
WINFIELD ROAD
M.P. 27.54
GENEVA SUBDIVISION
D.O.T.#174 964H

REDRAWN

11	06-09-08 INSTALL HALF BLOCK SYSTEM FROM TUNNEL TO WINFIELD ROAD. CHANGE LTWRT TO MP 25.54 AFE 88114	MODIFICATION LEVEL			
		Q.A. LAST LEVEL CHECKED	DQ		
		LAST LEVEL MOD THIS TYPICAL	DQ		
		LAST LEVEL BY DESIGNER	DQ		
		CHANGED FROM TYPICAL?	Y		

UNION PACIFIC — SIGNAL DESIGN

DES:	CTC
DIG:	CTC
CHK:	JJL
A.F.E.	88114
ID:	GEN2754.11X

UNION PACIFIC RAILROAD

CHICAGO, ILLINOIS TO CLINTON, IOWA
C.T.C. CIRCUITS

Office of Sr AVP Engineering - Signal/TCO Omaha, Nebraska

DATE	06-09-08
SHEET	11
DWG	27.54
	GEN

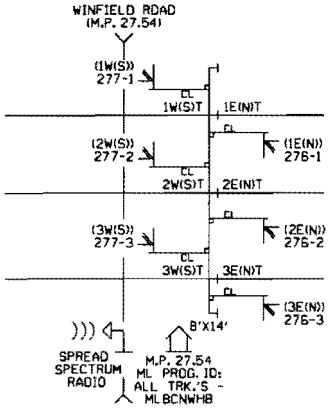

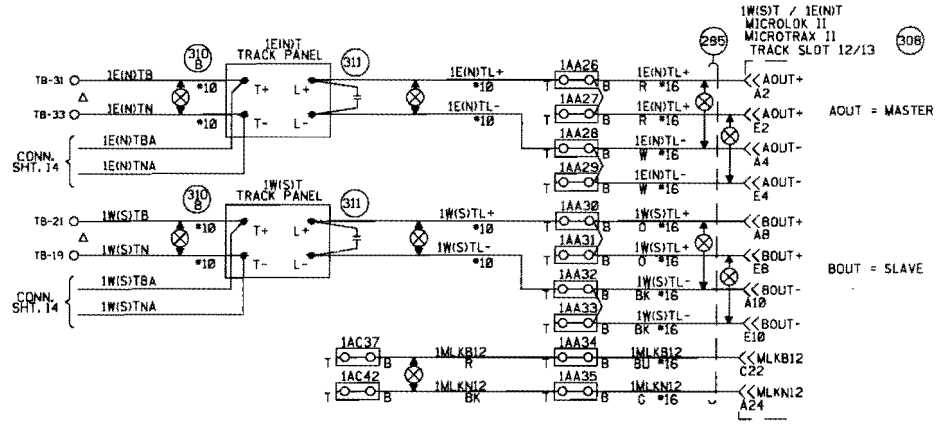

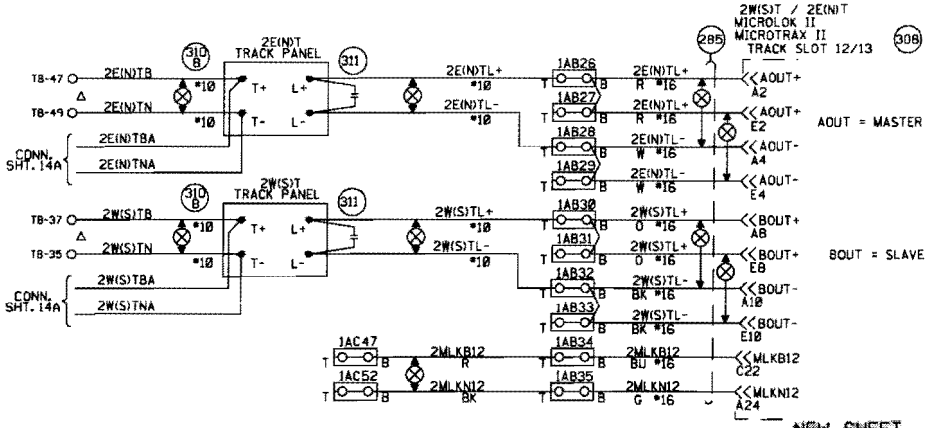

NOTES:

EAST= (N)ORTH.
WEST= (S)OUTH.

⊗ = TWISTED WIRES

⊘ = OBSERVE CORRECT POLARITY. EQUIPMENT WILL BE DAMAGED IF CONNECTIONS ARE REVERSED

ALL WIRING TO TRACK 2C. NO.6 U.G.B.T. CABLE UNLESS OTHERWISE SPECIFIED.

ALL CASE WIRING TO BE NO.16 UNLESS OTHERWISE SPECIFIED.

ALL GROUND CONNECTIONS TO BE #6 OR LARGER, SIGNAL WIRING SHOP TO RUN ALL GROUND CONNECTIONS.

ENSURE TRACK POLARITY IS TRANSPOSED ACROSS ALL INSULATED JOINTS.

⊠ = TEST TERMINALS MUST BE INSTALLED ON ALL WIRING CONNECTED TO EXTERNAL CABLES (EXCEPT TRACK AND A.C. POWER WIRES).

PORTABLE GENERATOR EXTENSION CORD FOR 240V TO 240V IS PROVIDED AS WELL AS A 120V TO 240V ADAPTER.

△ FIELD ENSURE PROPER TRACK POLARITY AND 'AC' ACCORDINGLY

NEW SHEET
GENEVA SUBDIVISION
SIGNALS 1W(S)-E(N)
SIGNALS 2W(S)-E(N)
SIGNALS 3W(S)-E(N)
M.P. 27.54
8'X14' HOUSE

1	06-09-08 INITIAL WOLF BLOCK SYSTEM FROM TURNER TO PARK, ILLINOIS. PHASE 1 PART 1 WO: 23-20 TO WO: 23-54 AFE: 88114	MODIFICATION LEVEL		UNION PACIFIC SAFETY PRODUCTIVITY SAFETY SIGNAL DESIGN	DES: CTC	UNION PACIFIC RAILROAD	DATE 06-09-08
		Q.A. LAST LEVEL CHECKED	DO		DIG: CTC	CHICAGO, ILLINOIS TO CLINTON, IOWA C.T.C. CIRCUITS	SHEET 12
		LAST LEVEL MOD THIS TYPICAL	DO		CHK: JJL		DWG 27.54
		LAST LEVEL BY DESIGNER	DO		A.F.E. 88114		GEN
		CHANGED FROM TYPICAL?	Y		ID= GEN2754.12S	Office of Sr AVP Engineering - Signal/TCO Omaha, Nebraska	