23

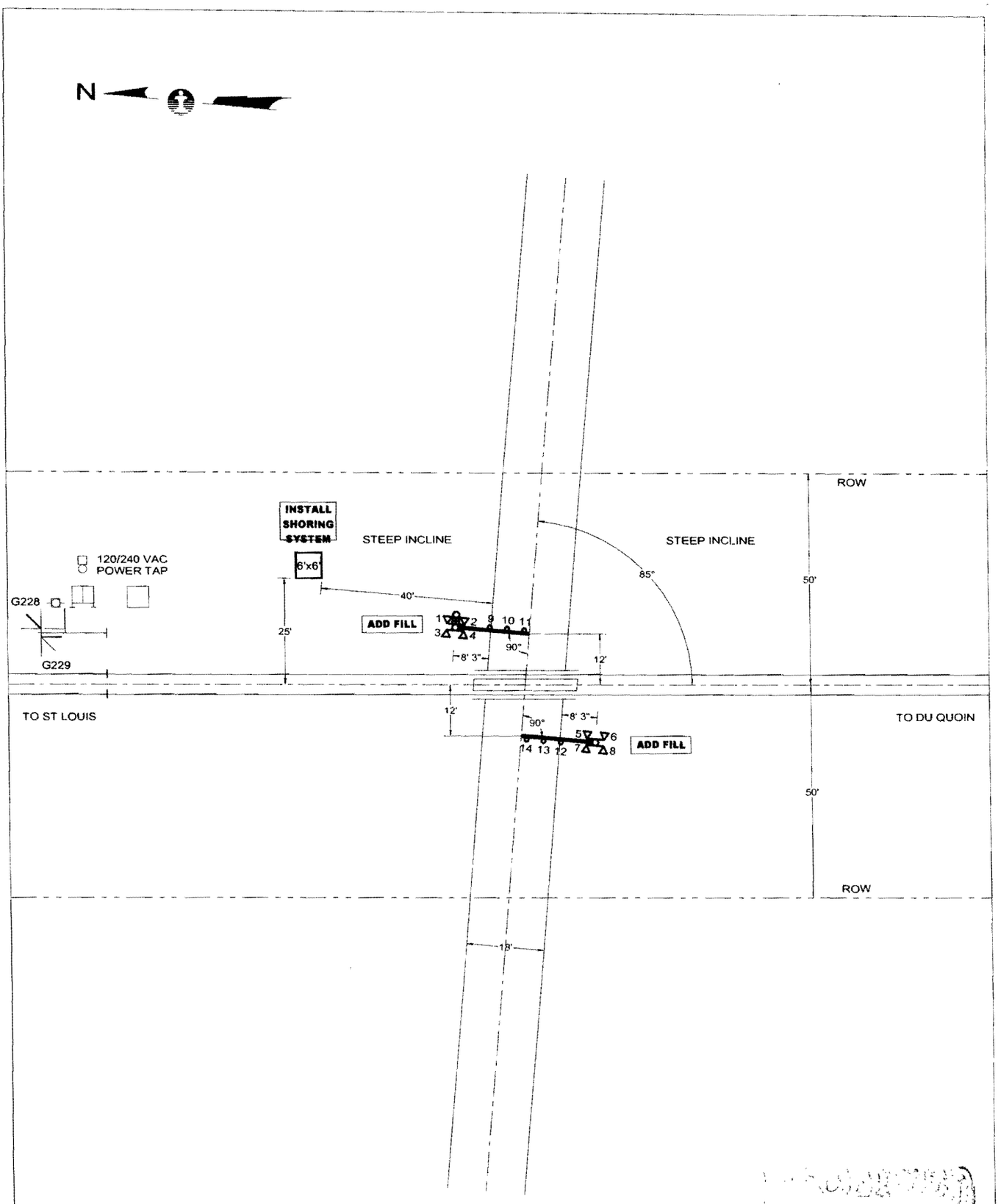

PROPOSED
OCT 24, 2008

SEP 17 2009

QUADRANT	NE	SW
STANDARD AFLS	LED	LED
CANTILEVER, FT.	-	-
GATE, FT.	17	17
ADDED LIGHTS	-	-
BARRICADE	315 °	-
MULTI-TK SIGN	-	-
BELL	X	-
REVISIONS		

E:\DWG\STL\02303X.CAD

CN

SIGNALS & COMMUNICATIONS, ENGINEERING DEPARTMENT

CITY & STATE	FREEBURG, IL	SD 1021 X	
CROSSING	PRESS RD - TR 197	DATE	SEPT 17, 2008
IC - 23.02-G		DOT - 296 094W	
MIDWEST DIVISION		ST LOUIS SUBDIVISION	
IN SERVICE	SCALE 1"=30'	DRAWN BY	AVS

SD 1021 - MP 22 TO 23

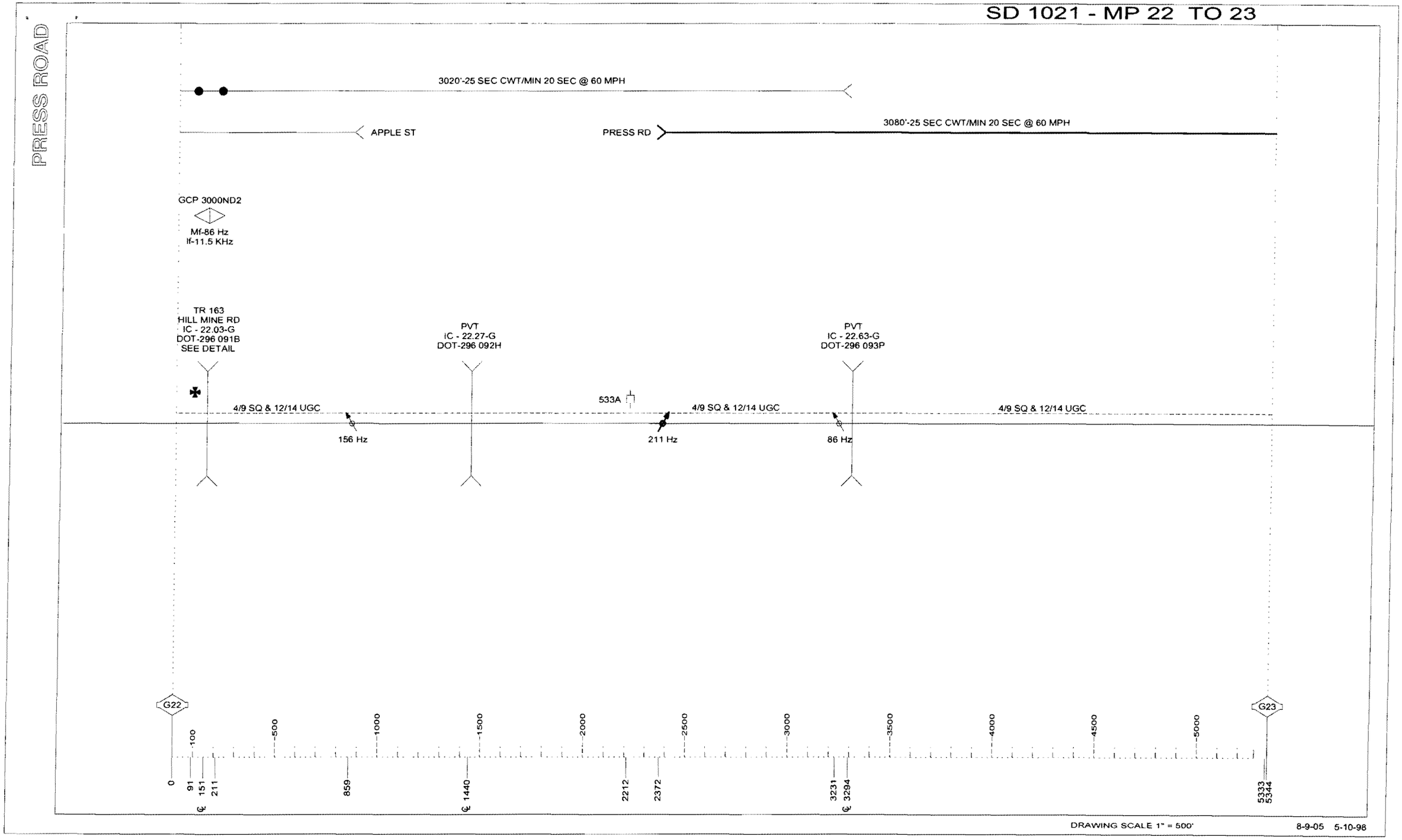

SD 1021 - MP 23 TO 24

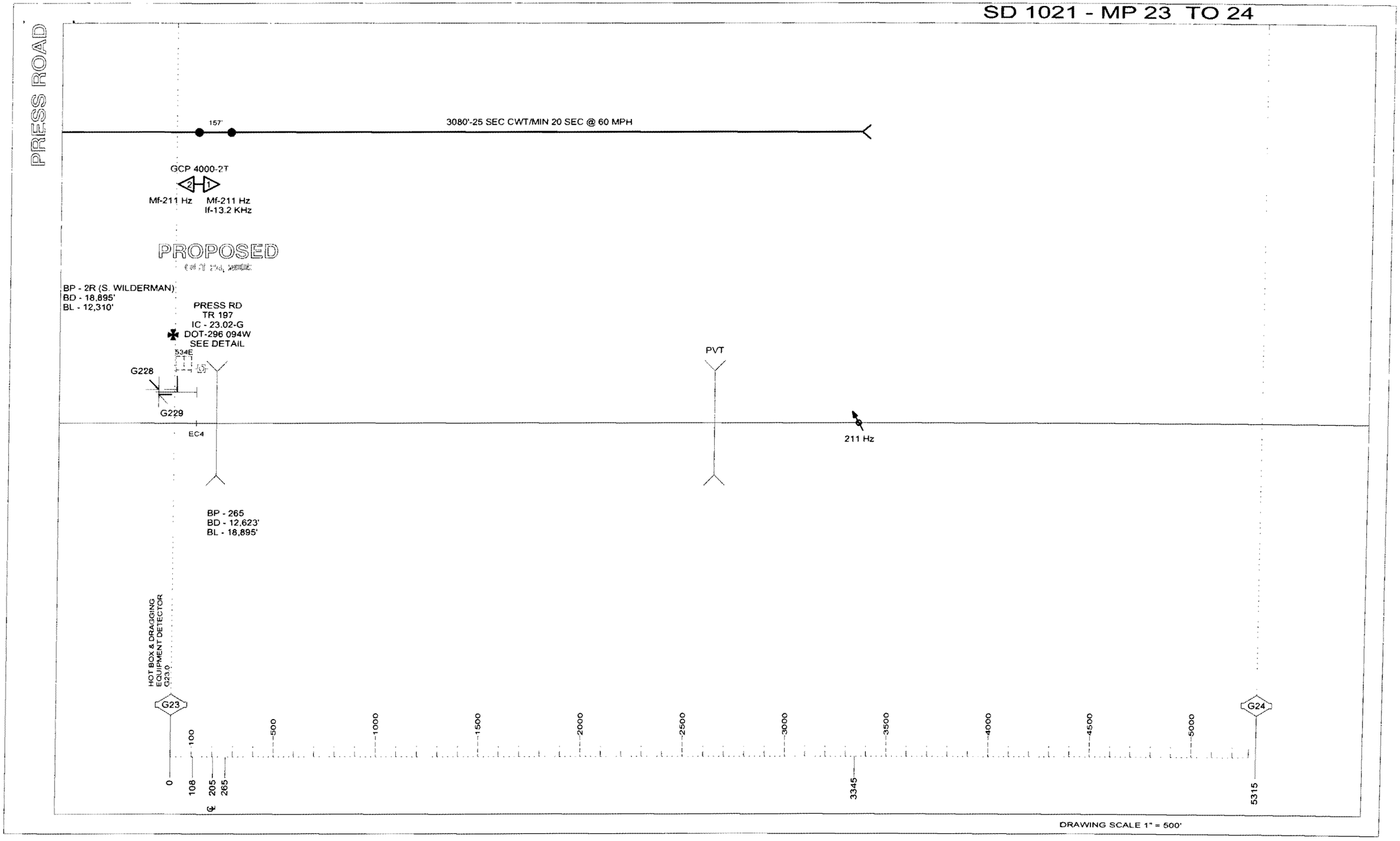

DRAWING SCALE 1" = 500'

WATERMARK

STL-023.02-01.dgn
26-AUG-2009

NO.	DATE	BY	DESCRIPTION	APP. BY
1				
2				
3				
4				
5				

REVISIONS

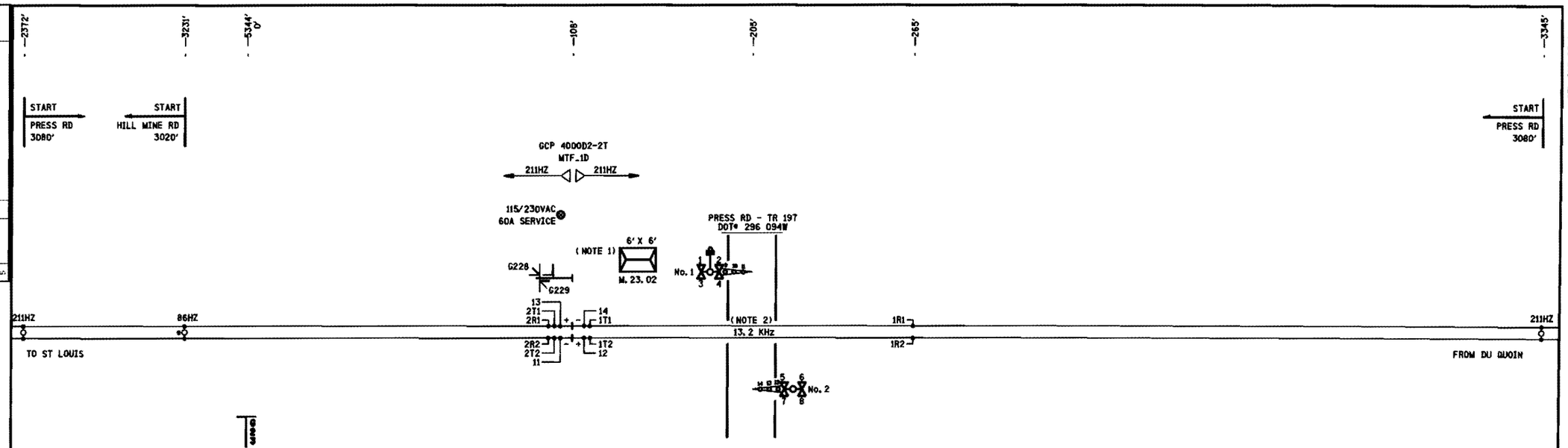

NOTES:
1) BUNGALOW TO BE INSTALLED WITH DOORS FACING TRACK.
2) ISLAND DISTANCE MINIMUM 120 FEET

DENOTES MULTI-FREQ. NARROW BAND SHUNT 62775-1543.

DENOTES MULTI-FREQ. NARROW BAND SHUNT 62775-8621.

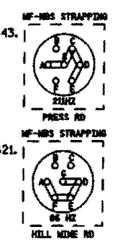

PROPOSED
DES. No. _____
RED-IN YELLOW-OUT
AS INSTALLED
DATE _____
BY _____

6' X 6' BUNGALOW

PROPOSED D	M	Y	REVISIONS	D	C	COMPLETED D	M	Y	C

REGION SOUTHERN
SUB. ST LOUIS 363
SIGNALS AND COMMUNICATIONS HOMEWOOD
DES. APL
3 AUGUST 2009
CH. MKN
TRACK LAYOUT
PRESS RD - TR 197
FREEBURG, IL
STL-023.02-01

SAFETRAN SYSTEM CORP.
LOUISVILLE DIVISION, LOUISVILLE, KY

16

SAFETRAN SYSTEMS CORPORATION

DES. : APL	DATE: 08/03/09	JOB NO. : P1CA10192	
CKD. : MKN	ISSUE DATE:	EST. NO. :	
DRN. : APL	PLAN NO. :	SHEET 1 OF 16	
P TIME: 10:33	P DATE: 26-AUG-2009	CAD ID. : STL-023.02-01	

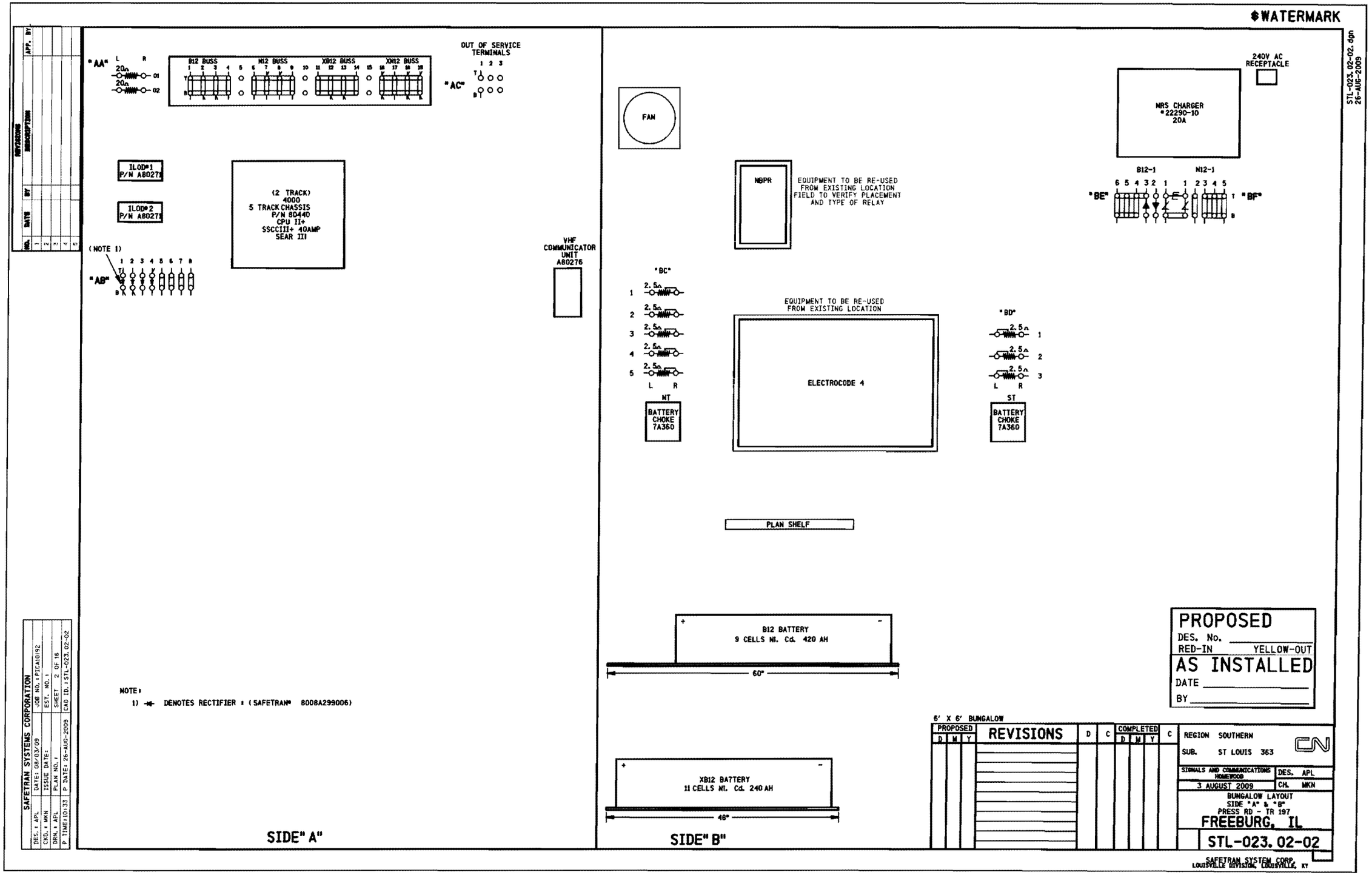

WATERMARK
STL-023.02-02.dgn
26-AUG-2009
REVISIONS
NO. DATE BY DESCRIPTION APP. BY
"AA"
L R
20Ω
20Ω
01
02
B12 BUSS
N12 BUSS
XB12 BUSS
XN12 BUSS
OUT OF SERVICE TERMINALS
"AC"
ILOD#1 P/N A80271
ILOD#2 P/N A80271
(2 TRACK) 4000 5 TRACK CHASSIS P/N 80440 CPU II+ SSCCIII+ 40AMP SEAR III
(NOTE 1)
"AB"
VHF COMMUNICATOR UNIT A80276
NOTE:
1) DENOTES RECTIFIER : (SAFETRAN# 8008A299006)
SIDE "A"
FAN
NBPR
EQUIPMENT TO BE RE-USED FROM EXISTING LOCATION FIELD TO VERIFY PLACEMENT AND TYPE OF RELAY
240V AC RECEPTACLE
NRS CHARGER #22290-10 20A
B12-1
N12-1
"BE"
"BF"
"BC"
2.5Ω
L R
NT
BATTERY CHOKE 7A360
EQUIPMENT TO BE RE-USED FROM EXISTING LOCATION
ELECTROCODE 4
"BD"
ST
BATTERY CHOKE 7A360
PLAN SHELF
B12 BATTERY 9 CELLS Ni. Cd. 420 AH
60"
XB12 BATTERY 11 CELLS Ni. Cd. 240 AH
48"
SIDE "B"
PROPOSED
DES. No.
RED-IN YELLOW-OUT
AS INSTALLED
DATE
BY
6' X 6' BUNGALOW
PROPOSED D M Y
REVISIONS
D C
COMPLETED D M Y
C
REGION SOUTHERN
SUB. ST LOUIS 363
CN
SIGNALS AND COMMUNICATIONS HOMEWOOD
DES. APL
3 AUGUST 2009
CH. MKN
BUNGALOW LAYOUT SIDE "A" & "B" PRESS RD - TR 197
FREEBURG, IL
STL-023.02-02
SAFETRAN SYSTEM CORP. LOUISVILLE DIVISION, LOUISVILLE, KY
SAFETRAN SYSTEMS CORPORATION
DES.: APL DATE: 08/03/09 JOB NO.: PICA10192
CKD.: MKN ISSUE DATE: EST. NO.:
DRN.: APL PLAN NO.: SHEET 2 OF 16
P TIME: 10:33 P DATE: 26-AUG-2009 CAD ID.: STL-023.02-02

WATERMARK

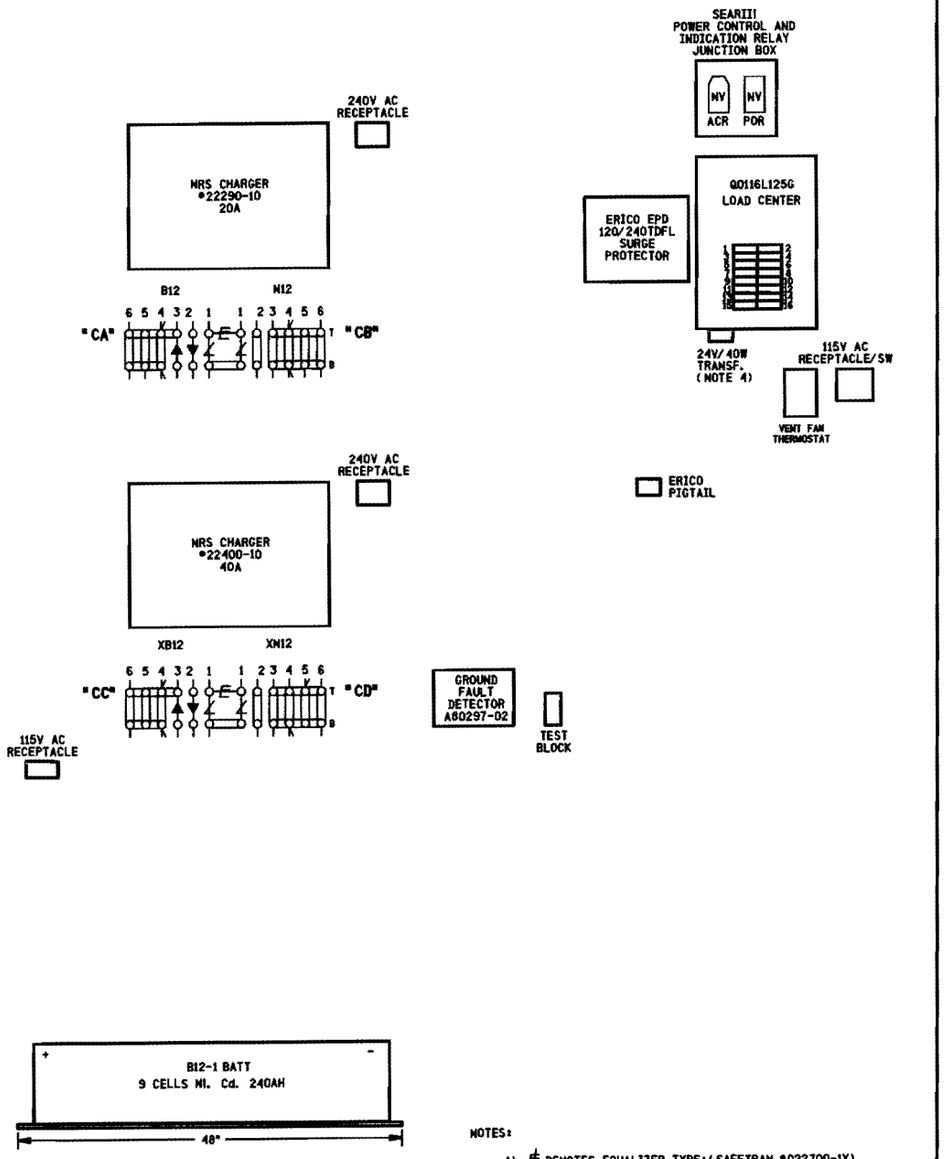

NOTES:

1) ⊄ DENOTES EQUALIZER TYPE: (SAFETRAN #022700-1X)
2) ⊣⊢ DENOTES LIGHTNING ARRESTER TYPE: (SAFETRAN #022585-1X)
3) SURGE PROTECTION SHOULD BE BONDED TO BUNGALOW.
4) 24V-40W TRANSFORMER (CN STOCK #02-45-367)

SIDE "C"

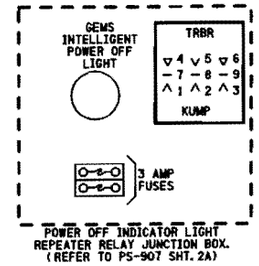

SIDE "D"
ABOVE ENTRY DOOR

NO.	DATE	BY	DESCRIPTION	APP. BY
1				
2				
3				
4				
5				

REVISIONS

SAFETRAN SYSTEMS CORPORATION

DES.: APL	DATE: 08/03/09	JOB NO.: PICA10192
CKD.: MKN	ISSUE DATE:	EST. NO.:
DRN.: APL	PLAN NO.:	SHEET 3 OF 16
P TIME: 10:34	P DATE: 26-AUG-2009	CAD ID.: STL-023.02-03

STL-023.02-03.dgn
26-AUG-2009

PROPOSED
DES. No. _____
RED-IN YELLOW-OUT
AS INSTALLED
DATE _____
BY _____

6' X 6' BUNGALOW

PROPOSED D	M	Y	REVISIONS	D	C	COMPLETED D	M	Y	C

REGION SOUTHERN
SUB. ST LOUIS 363
CN

SIGNALS AND COMMUNICATIONS HOMEWOOD
3 AUGUST 2009
DES. APL
CH. MKN

BUNGALOW LAYOUT
SIDE "C" & OVER DOOR SIDE "D"
PRESS RD - TR 197
FREEBURG, IL

STL-023.02-03

SAFETRAN SYSTEM CORP.
LOUISVILLE DIVISION, LOUISVILLE, KY

WATERMARK

NO.	DATE	BY	REVISIONS DESCRIPTION	APP. BY
1				
2				
3				
4				
5				

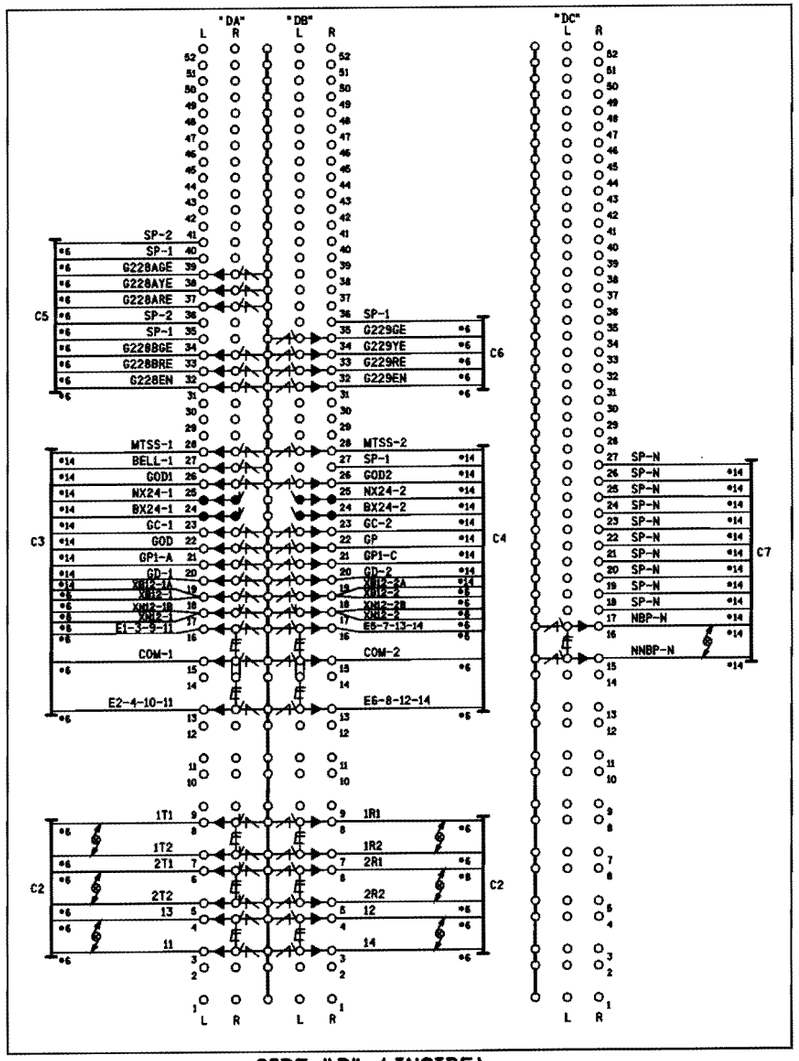

SIDE "D" (INSIDE)

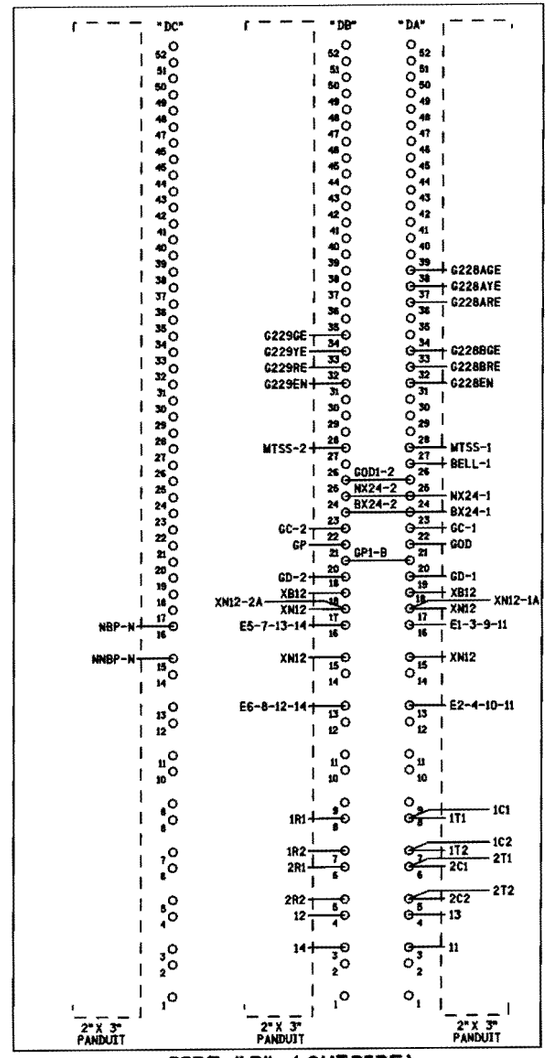

SIDE "D" (OUTSIDE)

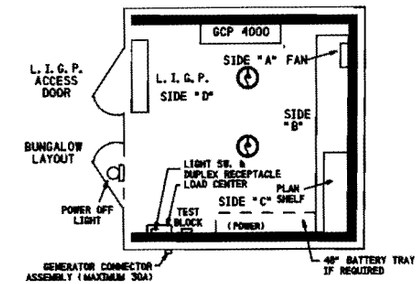

ROOF MOUNTED AC/HEATING UNIT

CABLE CONSIST:

C1-3C#6 TECK 90 U/G TO MAIN SERVICE
C2-(6)-2SC#6 TW. TO TRACK
C3-16C (7#6, 9#14) TO GATE (SIG.#1)
C4-16C (7#6, 9#14) TO GATE (SIG.#2)
C5-(2)-5C#6 TO SIGNAL G228
C6-5C#6 TO SIGNAL G229
C7-12C#14 TO NORTH ????

NOTES:

1) DENOTES LIGHTNING ARRESTER TYPE:(SAFETRAN #022585-1X)
2) DENOTES EQUALIZER TYPE:(SAFETRAN #022700-1X)
3) DENOTES TWISTED PAIR.
4) ENSURE DOUBLE NUTTING OF ALL TERMINALS.
5) ● DENOTES INSULATED TERMINAL

PROPOSED
DES. No. _____
RED-IN YELLOW-OUT
AS INSTALLED
DATE _____
BY _____

6' X 6' BUNGALOW

PROPOSED D	M	Y	REVISIONS	D	C	COMPLETED D	M	Y	C

REGION SOUTHERN
SUB. ST LOUIS 363
CN

SIGNALS AND COMMUNICATIONS HOMEWOOD — DES. APL
3 AUGUST 2009 — CH. MKN

BUNGALOW LAYOUT SIDE "D"
LOW IMPEDANCE GROUND PLANE
PRESS RD - TR 197
FREEBURG, IL

STL-023.02-04

SAFETRAN SYSTEM CORP.
LOUISVILLE DIVISION, LOUISVILLE, KY

SAFETRAN SYSTEMS CORPORATION
DES. : APL — DATE: 08/03/09 — JOB NO.: PICA10192
CKD. : MKN — ISSUE DATE: — EST. NO.: 7
DRN. : APL — PLAN NO.: 1 — SHEET 4 OF 16
P TIME:10:34 — P DATE: 26-AUG-2009 — CAD ID.: STL-023.02-04

STL-023.02-04.dgn
26-AUG-2009

WATERMARK

STL-023.02-05.dgn
26-AUG-2009

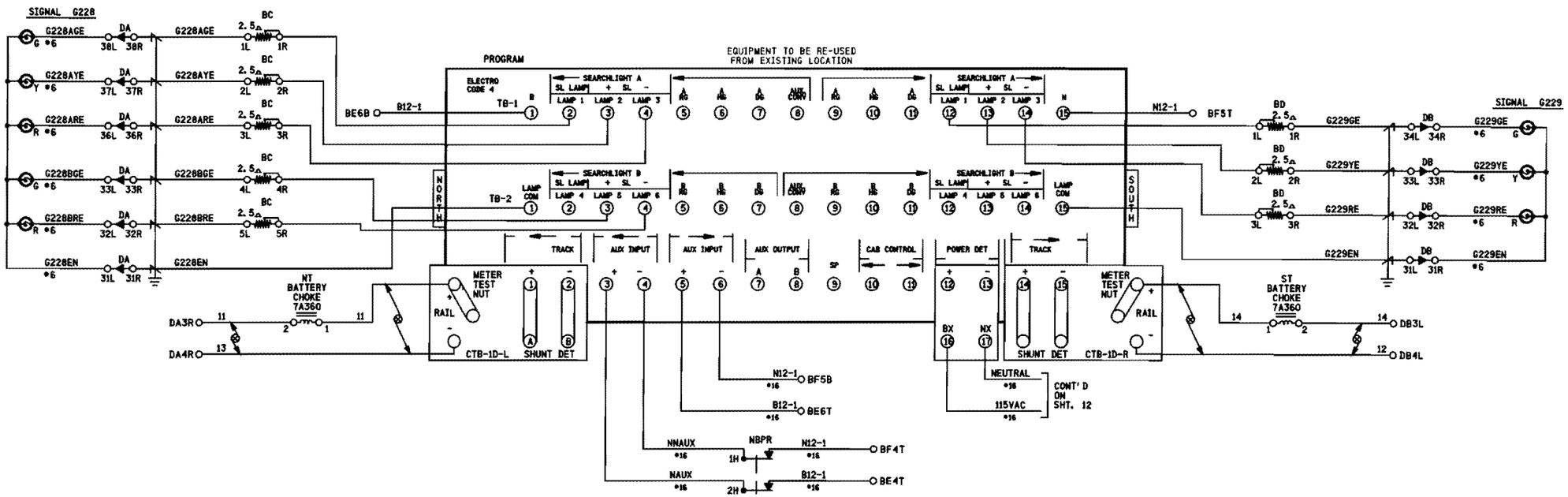

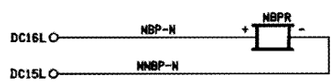

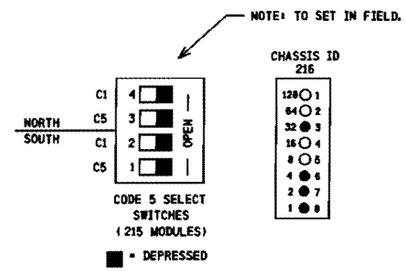

230 CARD APPLICATION SHUNT - PROGRAM EC4_216RevA		● = PUNCHED ○ = NOT PUNCHED
	FUNCTION IF NOT PUNCHED	FUNCTION IF PUNCHED
○ 8	MUST NOT BE PUNCHED FOR UNIT TO OPERATE	MUST NOT BE PUNCHED FOR UNIT TO OPERATE
○ 7	CODE 2 IN RIGHT SENDS CODE 7 LEFT	CODE 2 IN RIGHT SENDS CODE 4 LEFT
○ 6	MAKES THIS UNIT A REGENERATIVE REPEATER	MAKES THIS UNIT A COLORLIGHT SIGNAL
● 5	SENDS OPEN LEFT AUX AS CODE 10 RIGHT	SENDS OPEN LEFT AUX AS CODE 10 LEFT
○ 4	SENDS OPEN RIGHT AUX AS CODE 10 LEFT	SENDS OPEN RIGHT AUX AS CODE 10 RIGHT
○ 3	REPEATS CODE 10	DOES NOT REPEAT CODE 10
○ 2	CODE 2 IN LEFT SENDS CODE 7 RIGHT	CODE 2 IN LEFT SENDS CODE 4 RIGHT
● 1	MUST BE PUNCHED FOR UNIT TO OPERATE	MUST BE PUNCHED FOR UNIT TO OPERATE

CONFIG. -
PROGRAM - JTS-Q
MODULES - 2-2R, 2-7K, 214, 215D, 216B, 220A & 220B, & 2-9HP

NOTES:-

1) ALL WIRINGS #10 AWG MINIMUM UNLESS OTHERWISE NOTED. WIRE SIZES SHOWN ARE MINIMUM GAUGE.
2) DENOTES TWISTED PAIR.
3) ✱ CROSSING WRAP (CODE 1 OUTPUT ONLY)
4) FIELD TO VERIFY CORRECT ELECTROCODE TRACK LEAD POLARITY
5) FIELD TO VERIFY CODE 5 SELECT SWITCHES POSITION

PROPOSED
DES. No. _____
RED-IN YELLOW-OUT
AS INSTALLED
DATE _____
BY _____

6' X 6' BUNGALOW

PROPOSED D	M	Y	REVISIONS	D	C	COMPLETED D	M	Y	C

REGION SOUTHERN
SUB. ST LOUIS 363
SIGNALS AND COMMUNICATIONS HOMEWOOD
3 AUGUST 2009
DES. APL
CH. MKN
EC4+
PRESS RD - TR 197
FREEBURG, IL
STL-023.02-05

SAFETRAN SYSTEM CORP.
LOUISVILLE DIVISION, LOUISVILLE, KY

SAFETRAN SYSTEMS CORPORATION
DES.: APL DATE: 08/03/09 JOB NO.: PICA10192
CKD.: MKN ISSUE DATE: EST. NO.:
DRN.: APL PLAN NO.: SHEET 5 OF 16
P TIME:10:34 P DATE: 26-AUG-2009 CAD ID.: STL-023.02-0

NO.	DATE	BY	DESCRIPTION	APP.	BY
1					
2					
3					
4					
5					

$WATERMARK

STL-023.02-06.dgn
26-AUG-2009

NO.	DATE	BY	REVISIONS DESCRIPTION	APP. BY
1				
2				
3				
4				
5				

NOTES:

1) DISABLE THE DISPLAY HEATER BY REMOVING JUMPER J-22 (LOCATED AT THE EDGE OF THE DISPLAY MODULE CARD THAT PLUGS INTO THE CHASSIS).

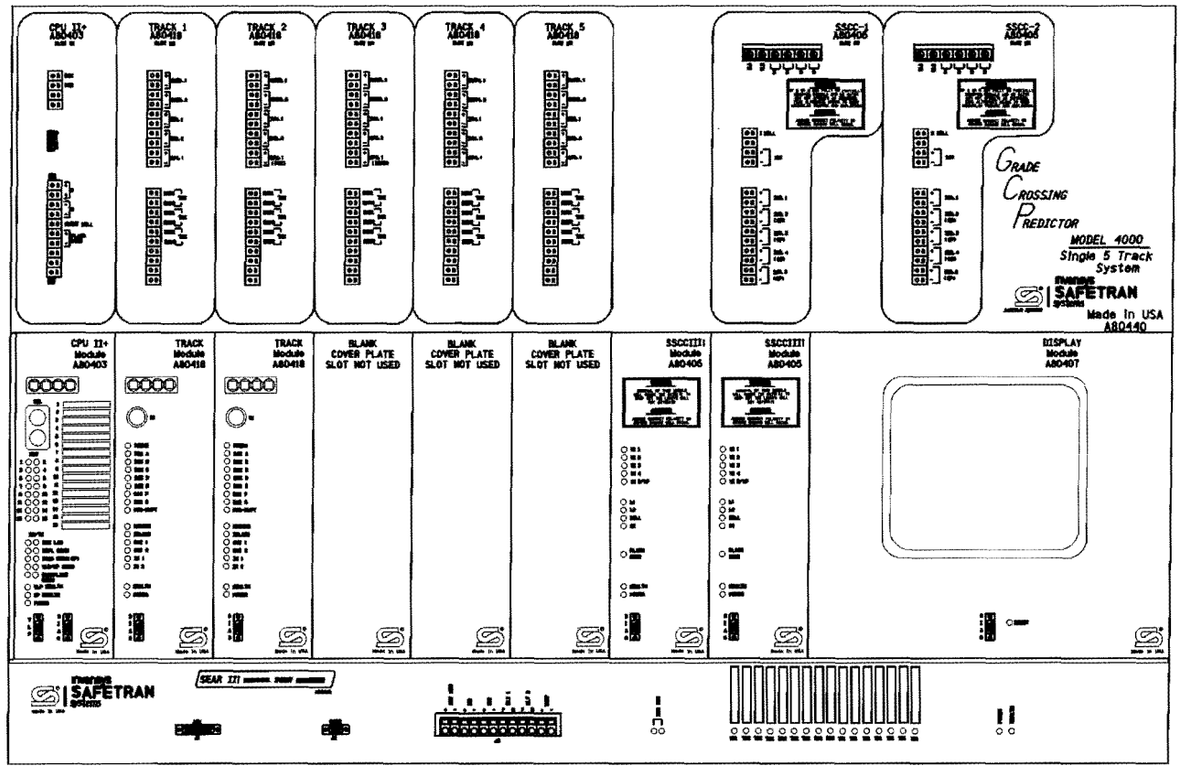

ATTENTION!

ENSURE THE DISPLAY MODULE HEATER IS DISABLED. LEAVING THE DISPLAY HEATER ENABLE WILL REDUCE THE AMOUNT OF BATTERY STANDBY TIME IN THE EVENT OF AN AC POWER FAILURE.

HEATER FUNCTION IS
JUMPER SELECTABLE ON
THE DISPLAY MODULE BOARD.
THREE OPTIONS ARE AVAILABLE.
NORMAL LCD HTR (DEFAULT)
HI CURRENT
NO JUMPER (HEATER DISABLED)

PROPOSED
DES. No. _____
RED-IN YELLOW-OUT

AS INSTALLED
DATE _____
BY _____

6' X 6' BUNGALOW

PROPOSED D	M	Y	REVISIONS	D	C	COMPLETED D	M	Y	C

REGION SOUTHERN
SUB. ST LOUIS 363

SIGNALS AND COMMUNICATIONS HOMEWOOD | DES. APL
3 AUGUST 2009 | CH. MKN

GCP 4000 REDUNDANT
5 TRACK TRK CHASSIS & MODULE LAYOUT
PRESS RD - TR 197
FREEBURG, IL

STL-023.02-06

SAFETRAN SYSTEM CORP.
LOUISVILLE DIVISION, LOUISVILLE, KY

SAFETRAN SYSTEMS CORPORATION

DES. : APL	DATE: 06/03/09	JOB NO.: PIC410192	
CKD. : MKN	ISSUE DATE:	EST. NO. :	
DWN. : APL	PLAN NO. :	SHEET 6 OF 16	
P TIME:10:34	P DATE: 26-AUG-2009	CAD ID. : STL-023.02-06	

WATERMARK

NO.	DATE	BY	DESCRIPTION	APP. BY
1				
2				
3				
4				
5				

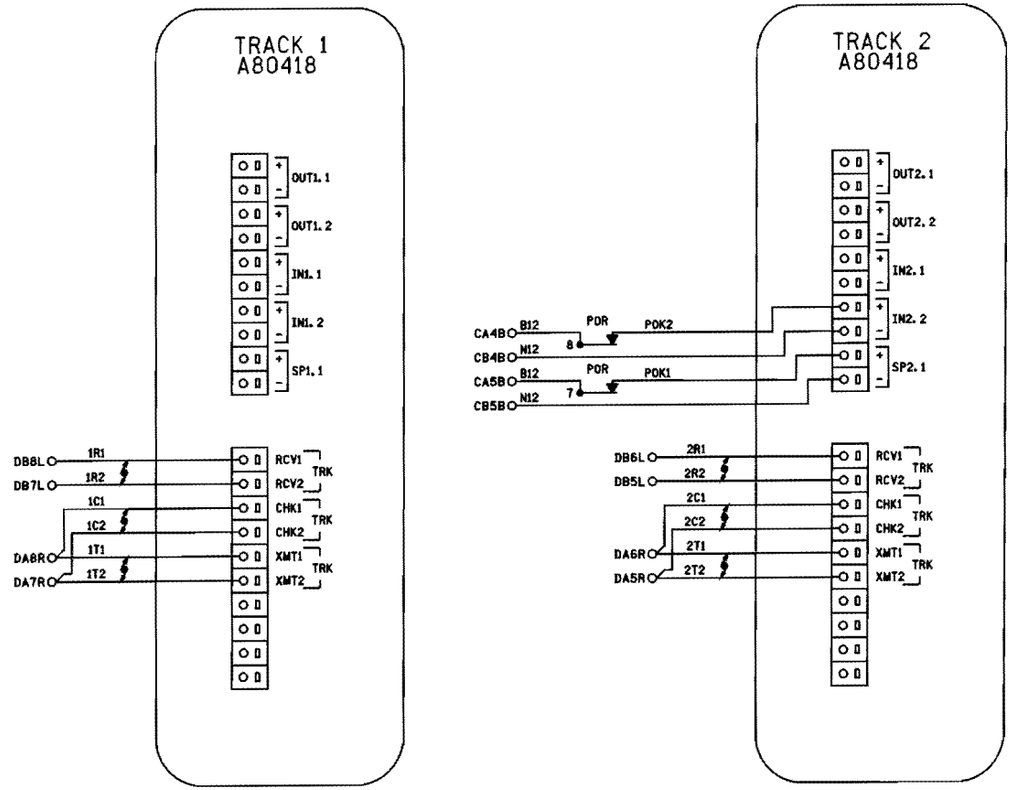

NOTES:

1) ALL WIRING #16 AWG UNLESS OTHERWISE NOTED.

2) ⚡ DENOTES TWISTED PAIR.

PROPOSED
DES. No. _____
RED-IN YELLOW-OUT
AS INSTALLED
DATE _____
BY _____

6' X 6' BUNGALOW

PROPOSED D	M	Y	REVISIONS	D	C	COMPLETED D	M	Y	C

REGION SOUTHERN
SUB. ST LOUIS 363
CN

SIGNALS AND COMMUNICATIONS HOMEWOOD | DES. APL
3 AUGUST 2009 | CH. MKN

GCP 4000
TRACKS 1 & 2 CONNECTIONS
PRESS RD - TR 197
FREEBURG, IL

STL-023.02-07

SAFETRAN SYSTEM CORP.
LOUISVILLE DIVISION, LOUISVILLE, KY

SAFETRAN SYSTEMS CORPORATION		
DES.: APL	DATE: 08/03/09	JOB NO.: PTCA10192
CKD.: MKN	ISSUE DATE:	EST. NO.:
DRN.: APL	PLAN NO.:	SHEET 7 OF 16
P TIME: 10:34	P DATE: 26-AUG-2009	CAD ID.: STL-023.02-07

STL-023.02-07.dgn
26-AUG-2009

WATERMARK

STL-023.02-08.dgn
26-AUG-2009

NO.	DATE	BY	DESCRIPTION	APP. BY
1				
2				
3				
4				
5				

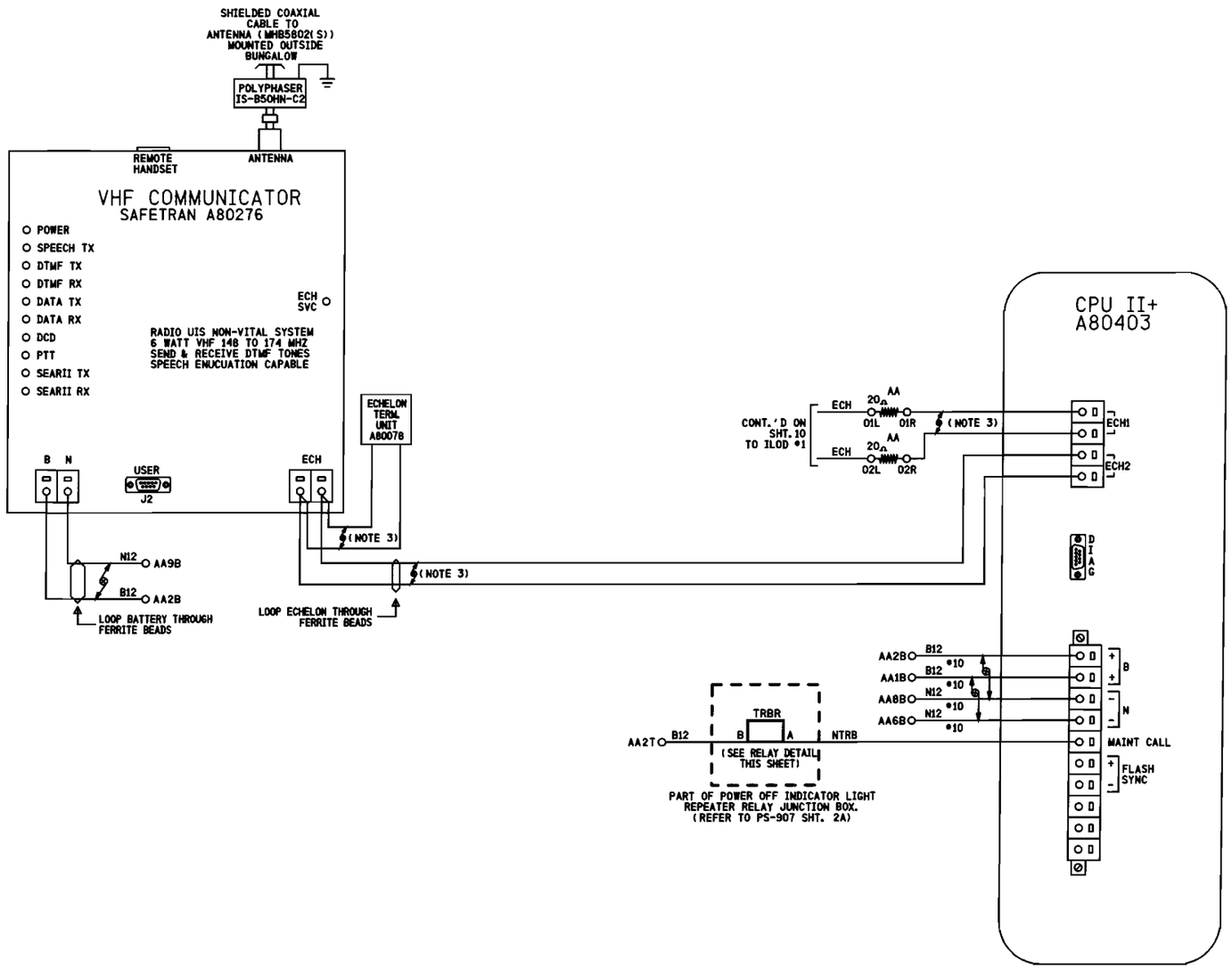

RELAY DETAIL

RELAY - POTTER & BRUMFIELD
MODEL KUMP-14D18-12 SOCKET MOUNTABLE
12 VDC W/ 3 FORM C CONTACTS.

SOCKET - SCREW TERMINAL
MODEL 27E121.

RELAY WIRING DIAGRAM (REAR VIEW)

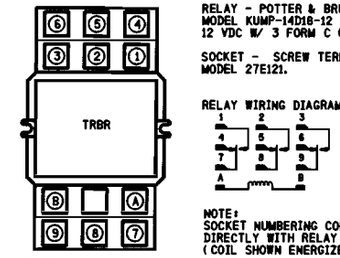

NOTE:
SOCKET NUMBERING CORRESPONDS DIRECTLY WITH RELAY NUMBERING.
(COIL SHOWN ENERGIZED)

NOTES:
1) ALL WIRING #16 AWG UNLESS OTHERWISE NOTED.
2) DENOTES TWISTED PAIR.
3) USE BELDEN CABLE, PART #8461-u500-60 FOR ALL ECHELON AND LAN WIRING.

PROPOSED
DES. No. _____
RED-IN YELLOW-OUT
AS INSTALLED
DATE _____
BY _____

6' X 6' BUNGALOW

PROPOSED D	M	Y	REVISIONS	D	C	COMPLETED D	M	Y	C

REGION SOUTHERN
SUB. ST LOUIS 363

SIGNALS AND COMMUNICATIONS HOMEWOOD
DES. APL
3 AUGUST 2009
CH. MKN

GCP 4000
CPUII+ & VHF COMMUNICATOR
PRESS RD - TR 197
FREEBURG, IL

STL-023.02-08

SAFETRAN SYSTEM CORP.
LOUISVILLE DIVISION, LOUISVILLE, KY

SAFETRAN SYSTEMS CORPORATION

DES.: APL	DATE: 08/03/09	JOB NO.: PICAID192	
CKD.: MKN	ISSUE DATE:	EST. NO.:	
DRN.: APL	PLAN NO.:	SHEET 8 OF 16	
P TIME:10:34	P DATE: 26-AUG-2009	CAD ID.: STL-023.02-08	

WATERMARK

STL-023.02-09.dgn
26-AUG-2009

NO.	DATE	BY	DESCRIPTION	APP. BY
1				
2				
3				
4				
5				

REVISIONS

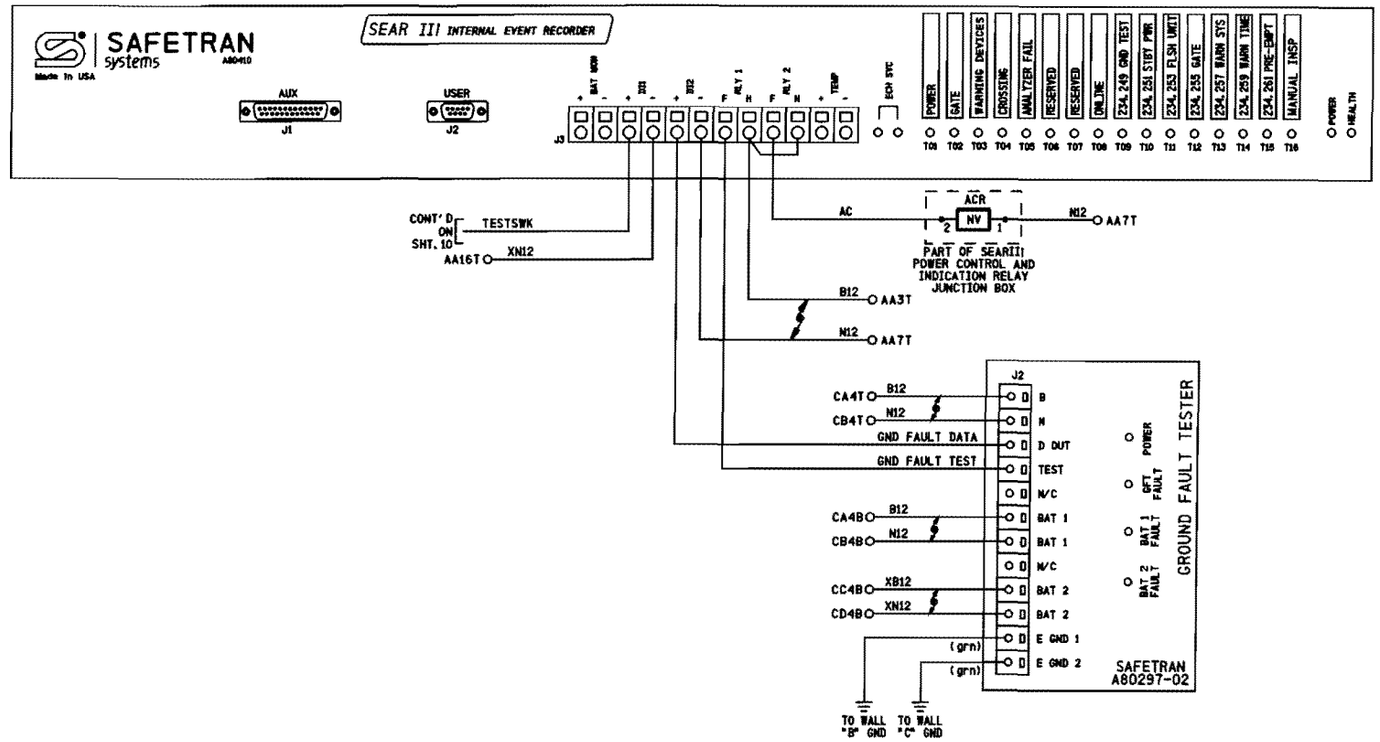

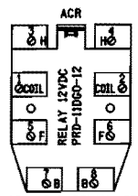

ACR - P&B RELAY, 2FB
(WITH TWO 30A CONTACTS @ 240VAC)
RELAY PART #PRD-11DG0-12

NOTES:
1) ALL WIRING #16 AWG UNLESS OTHERWISE NOTED.
2) DENOTES TWISTED PAIR.

PROPOSED
DES. No. _____
RED-IN YELLOW-OUT
AS INSTALLED
DATE _____
BY _____

6' X 6' BUNGALOW

PROPOSED D	M	Y	REVISIONS	D	C	COMPLETED D	M	Y	C

REGION SOUTHERN
SUB. ST LOUIS 363
CN

SIGNALS AND COMMUNICATIONS HOMEWOOD — DES. APL
3 AUGUST 2009 — CH. MKN

GCP 4000/SEAR III
INTERNAL EVENT ANALYZER WITH GFT
PRESS RD - TR 197
FREEBURG, IL

STL-023.02-09

SAFETRAN SYSTEM CORP.
LOUISVILLE DIVISION, LOUISVILLE, KY

SAFETRAN SYSTEMS CORPORATION

DES.: APL	DATE: 08/03/09	JOB NO.: PICA10192	
CKD.: MKN	ISSUE DATE:	EST. NO.:	
DRN.: APL	PLAN NO.:	SHEET 9 OF 16	
P TIME: 10:34	P DATE: 26-AUG-2009	CAD ID.: STL-023.02-09	

WATERMARK

STL-023.02-10.dgn
26-AUG-2009

NO.	DATE	BY	DESCRIPTION	APP. BY
1				
2				
3				
4				
5				

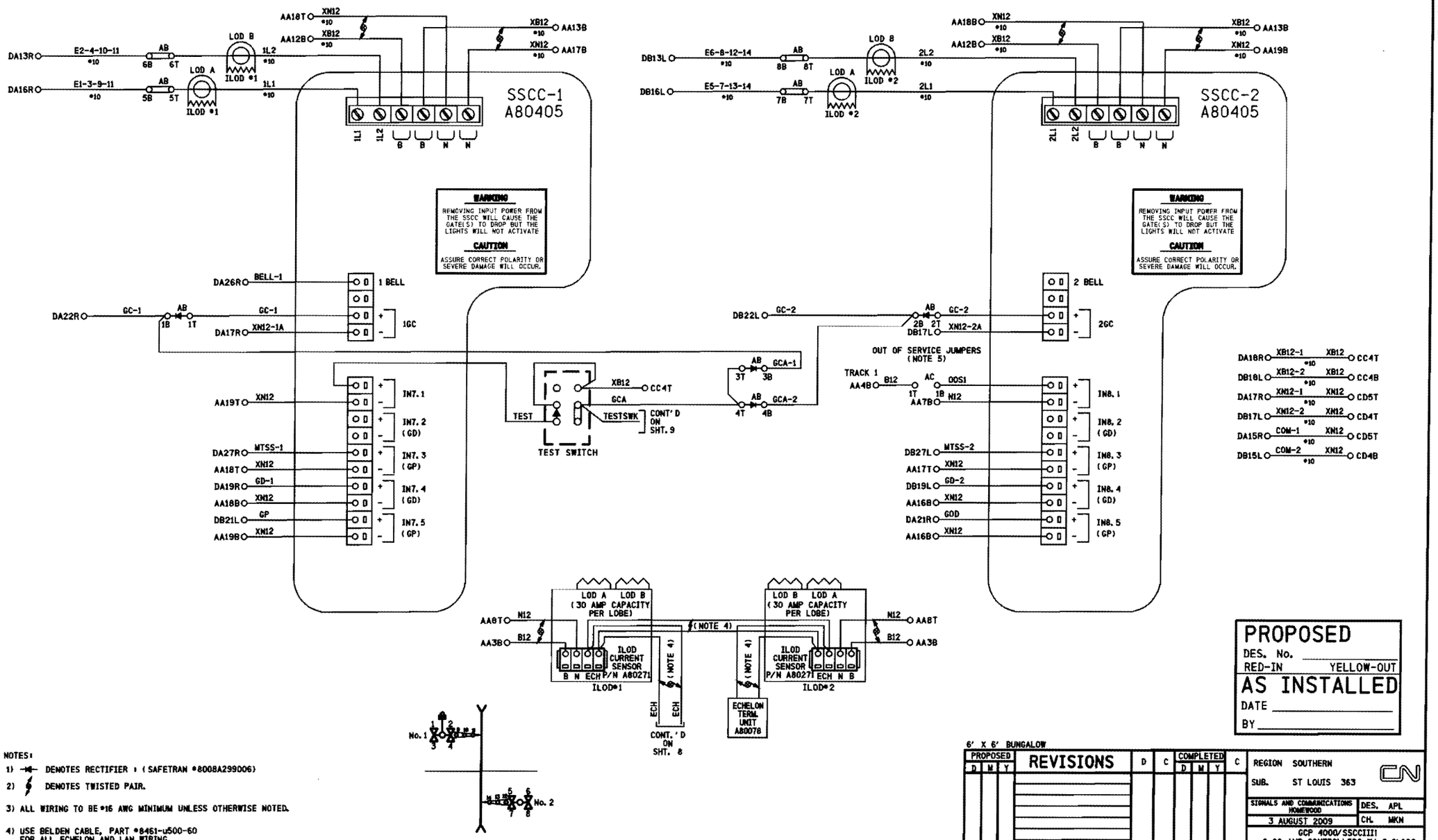

NOTES:

1) DENOTES RECTIFIER : (SAFETRAN #8008A299006)

2) DENOTES TWISTED PAIR.

3) ALL WIRING TO BE #16 AWG MINIMUM UNLESS OTHERWISE NOTED.

4) USE BELDEN CABLE, PART #8461-u500-60 FOR ALL ECHELON AND LAN WIRING.

TO TAKE TRACK 1 (T1 & T2) OUT OF SERVICE, JUMPER AC1T TO AC1B

PROPOSED
DES. No. _____
RED-IN YELLOW-OUT

AS INSTALLED
DATE _____
BY _____

6' X 6' BUNGALOW

PROPOSED D	M	Y	REVISIONS	D	C	COMPLETED D	M	Y	C

REGION SOUTHERN
SUB. ST LOUIS 363

SIGNALS AND COMMUNICATIONS HOMEWOOD — DES. APL
3 AUGUST 2009 — CH. MKN

GCP 4000/SSCCIII!
2-20 AMP CONTROLLERS W/ 2 ILODS
PRESS RD - TR 197
FREEBURG, IL

STL-023.02-10

SAFETRAN SYSTEM CORP.
LOUISVILLE DIVISION, LOUISVILLE, KY

SAFETRAN SYSTEMS CORPORATION

DES.: APL	DATE: 08/03/09	JOB NO.: PICA10192	
CKD.: MKN	ISSUE DATE:	EST. NO.:	
DRN.: APL	PLAN NO.:	SHEET 10 OF 16	
P. TIME: 10:34	P. DATE: 26-AUG-2009	CAD ID.: STL-023.02-10	

WATERMARK

STL-023.02-11.dgn
26-AUG-2009

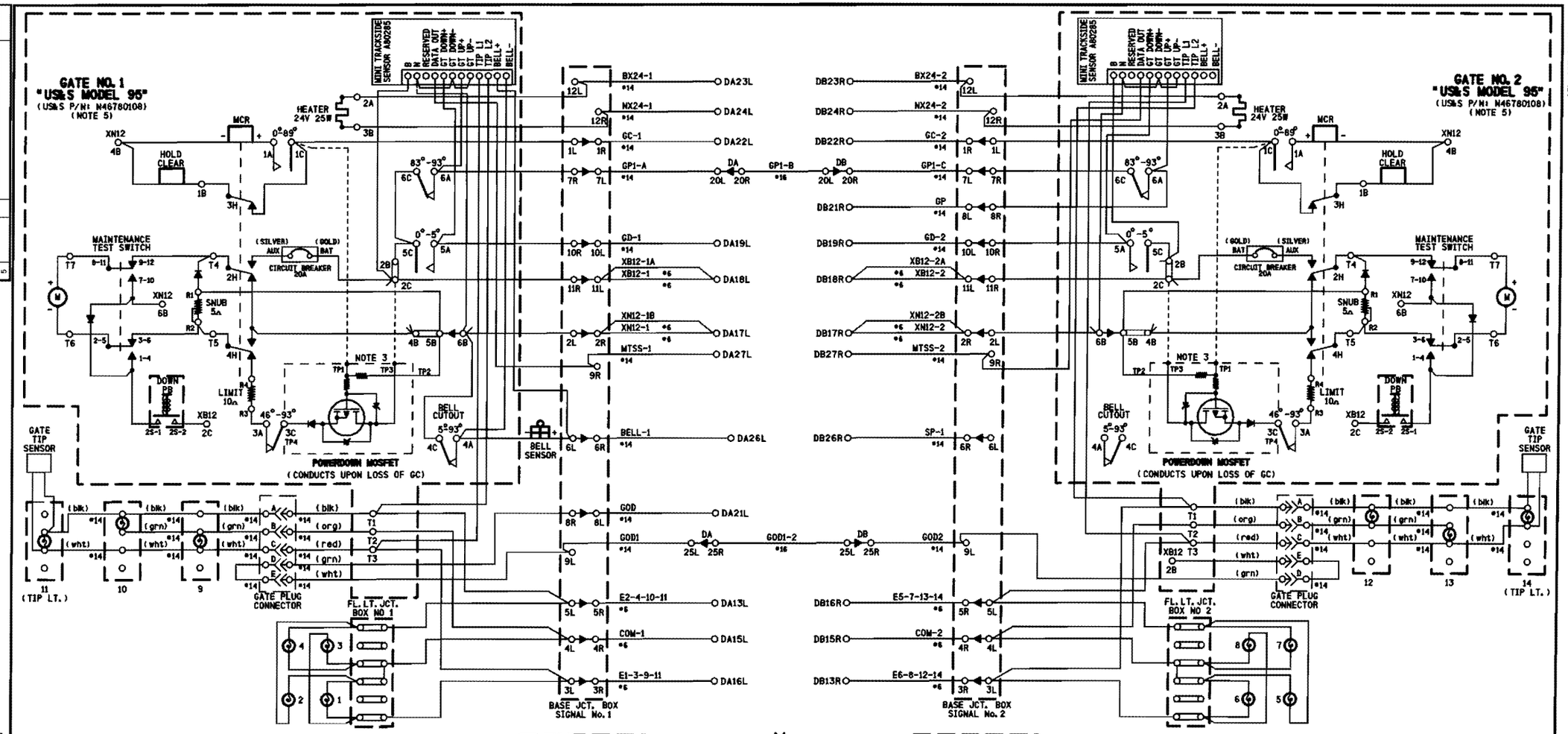

NOTES:

1) ON GATE No. 1 ADD STRAP BETWEEN TERMINAL 2B & 2C, ADD JUMPER BETWEEN TERMINAL 2B & 5C, BETWEEN TERMINAL 5C & 6C
2) ON GATE No. 2 ADD STRAP BETWEEN TERMINAL 2B & 2C ADD JUMPER BETWEEN TERMINAL 2B & 5C AND CONNECT GP AS SHOWN
3) POWERDOWN PCB TERMINALS TP1, TP3 & TP4 FIT OVER TERMINALS 1C, 2C & 3C RESPECTIVELY
4) ALL WIRING #10 AWG MINIMUM UNLESS OTHERWISE NOTED. WIRE SIZES SHOWN ARE MINIMUM GAUGE.
5) GATE DESCENT TIME (RELEASE FROM VERTICAL TO FULLY HORIZONTAL) TO BE WITHIN 11 SECONDS.
6) ENSURE ALL TERMINALS HAVE TWO SHOULDER NUTS.
7) FOR GATE(S) THAT HAS BELL, ADD JUMPER BETWEEN 4C AND 6B.

PROPOSED
DES. No. _____
RED-IN YELLOW-OUT
AS INSTALLED
DATE _____
BY _____

6' X 6' BUNGALOW

PROPOSED D	M	Y	REVISIONS	D	C	COMPLETED D	M	Y	C

REGION SOUTHERN
SUB. ST LOUIS 363

SIGNALS AND COMMUNICATIONS HOMEWOOD
3 AUGUST 2009
DES. APL
CH. MKN

GATE MECHANISM CONTROL CIRCUITS
US&S MODEL 95
PRESS RD - TR 197
FREEBURG, IL

STL-023.02-11

SAFETRAN SYSTEM CORP.
LOUISVILLE DIVISION, LOUISVILLE, KY

SAFETRAN SYSTEMS CORPORATION		
DES.: APL	DATE: 08/03/09	JOB NO.: PICA10192
CKD.: MKN	ISSUE DATE:	EST. NO.:
DRN.: APL	PLAN NO.:	SHEET 11 OF 16
P. TIME: 10:34	P. DATE: 26-AUG-2009	CAD ID.: STL-023.02-11

NO.	DATE	BY	REVISION DESCRIPTION	APP. BY
1				
2				
3				
4				
5				

WATERMARK

STL-023.02-12.dgn
26-AUG-2009

NO.	DATE	BY	DESCRIPTION	APP. BY
1				
2				
3				
4				
5				

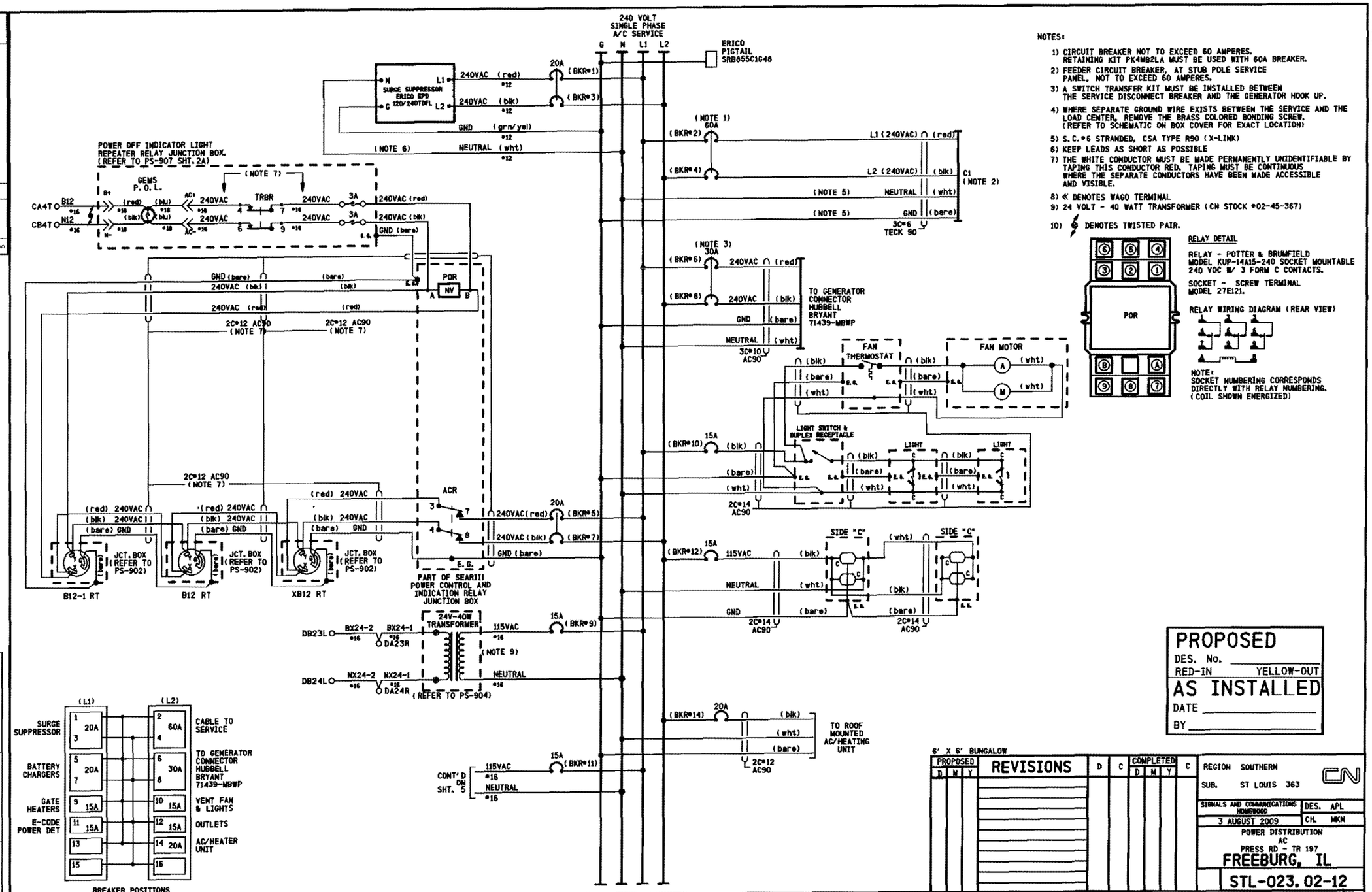

NOTES:

1) CIRCUIT BREAKER NOT TO EXCEED 60 AMPERES. RETAINING KIT PK4MB2LA MUST BE USED WITH 60A BREAKER.
2) FEEDER CIRCUIT BREAKER, AT STUB POLE SERVICE PANEL. NOT TO EXCEED 60 AMPERES.
3) A SWITCH TRANSFER KIT MUST BE INSTALLED BETWEEN THE SERVICE DISCONNECT BREAKER AND THE GENERATOR HOOK UP.
4) WHERE SEPARATE GROUND WIRE EXISTS BETWEEN THE SERVICE AND THE LOAD CENTER, REMOVE THE BRASS COLORED BONDING SCREW. (REFER TO SCHEMATIC ON BOX COVER FOR EXACT LOCATION)
5) S.C.#6 STRANDED, CSA TYPE R90 (X-LINK)
6) KEEP LEADS AS SHORT AS POSSIBLE
7) THE WHITE CONDUCTOR MUST BE MADE PERMANENTLY UNIDENTIFIABLE BY TAPING THIS CONDUCTOR RED. TAPING MUST BE CONTINUOUS WHERE THE SEPARATE CONDUCTORS HAVE BEEN MADE ACCESSIBLE AND VISIBLE.
8) « DENOTES WAGO TERMINAL
9) 24 VOLT - 40 WATT TRANSFORMER (CN STOCK #02-45-367)
10) ⚡ DENOTES TWISTED PAIR.

RELAY DETAIL

RELAY - POTTER & BRUMFIELD MODEL KUP-14A15-240 SOCKET MOUNTABLE 240 VOC W/ 3 FORM C CONTACTS.

SOCKET - SCREW TERMINAL MODEL 27E121.

RELAY WIRING DIAGRAM (REAR VIEW)

NOTE:
SOCKET NUMBERING CORRESPONDS DIRECTLY WITH RELAY NUMBERING. (COIL SHOWN ENERGIZED)

BREAKER POSITIONS

PROPOSED
DES. No. _____
RED-IN YELLOW-OUT
AS INSTALLED
DATE _____
BY _____

6' X 6' BUNGALOW

PROPOSED D	M	Y	REVISIONS	D	C	COMPLETED D	M	Y	C

REGION SOUTHERN
SUB. ST LOUIS 363
SIGNALS AND COMMUNICATIONS HOMEWOOD
3 AUGUST 2009
DES. APL
CH. MKN
POWER DISTRIBUTION
AC
PRESS RD - TR 197
FREEBURG, IL
STL-023.02-12

SAFETRAN SYSTEM CORP.
LOUISVILLE DIVISION, LOUISVILLE, KY

SAFETRAN SYSTEMS CORPORATION
DES. : APL | DATE: 08/03/09 | JOB NO. : PTCA10192
CKD. : MKN | ISSUE DATE: | EST. NO. :
DRN. : APL | PLAN NO. : | SHEET 12 OF 16
P TIME: 10:34 | P DATE: 26-AUG-2009 | CAD ID. : STL-023.02-12

WATERMARK

STL-023.02-13.dgn
26-AUG-2009

NO.	DATE	BY	REVISIONS DESCRIPTION	APP. BY
1				
2				
3				
4				
5				

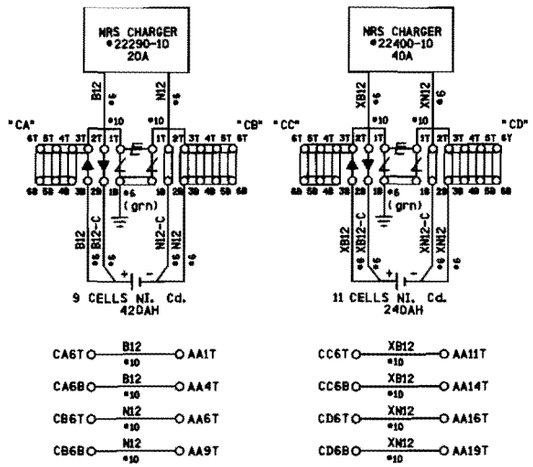

CA6T	B12 #10	AA1T	CC6T	XB12 #10	AA11T
CA6B	B12 #10	AA4T	CC6B	XB12 #10	AA14T
CB6T	N12 #10	AA6T	CD6T	XN12 #10	AA16T
CB6B	N12 #10	AA9T	CD6B	XN12 #10	AA19T

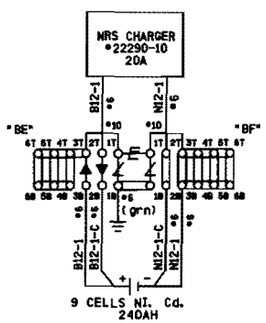

SAFETRAN SYSTEMS CORPORATION		
DES.: APL	DATE: 08/03/09	JOB NO.: PTCA1D192
CKD.: MKN	ISSUE DATE:	EST. NO.:
DRN.: APL	PLAN NO.:	SHEET 13 OF 16
P. TIME: 10:34	P. DATE: 26-AUG-2009	CAD ID.: STL-023.02-3

PROPOSED
DES. No. _____
RED-IN YELLOW-OUT
AS INSTALLED
DATE _____
BY _____

6' X 6' BUNGALOW

PROPOSED D	M	Y	REVISIONS	D	C	COMPLETED D	M	Y	C

REGION SOUTHERN
SUB. ST LOUIS 363
CN

SIGNALS AND COMMUNICATIONS HOMEWOOD	DES. APL
3 AUGUST 2009	CH. MKN

POWER DISTRIBUTION
DC
PRESS RD - TR 197
FREEBURG, IL

STL-023.02-13

SAFETRAN SYSTEM CORP.
LOUISVILLE DIVISION, LOUISVILLE, KY

WATERMARK

STL-023.02-14.dgn
26-AUG-2009

REVISIONS				
NO.	DATE	BY	DESCRIPTION	APP. BY
1				
2				
3				
4				
5				

Program Report

Location and SIN

DOT Number: 296094W
Milepost Number: 23.02
Site Name: Press Road - TR 197

SIN: 762010010016

MCF and Template Selection

MCF Name: GCP-T6X-02-1.mcf
MCF Revision: 021
MCFCRC: 6076E435

Template = 1D:3 Unl pairs

Check Numbers

Office Check No. (DT 4.6.0): 5B9A9A6B
Office Check Number: 5B9A9A6B
Config. Check Number: 3F562FED
(Based on MCF Revision 021)

Program

BASIC: module configuration
Track 1 Slot = Track
Track 2/RIO 1 Slot = Track
Track 3 Slot = Not Used
Track 4 Slot = Not Used
Track 5/RIO 2 Slot = Not Used
Track 6/RIO 3 Slot = Not Used
SSCC-1 Slot = SSCC31
SSCC-2 Slot = SSCC31
SEAR Used = Yes

BASIC: MS/GCP operation
Track 1 : MS/GCP Operation = Yes
Track 2 : MS/GCP Operation = Yes

BASIC: Island operation
Track 1 : Island Used = Internal
Track 2 : Island Used = No

BASIC: preamption
Preempt Logic = No

BASIC: radio Dax links
Radio DAX link A Used = No
Radio DAX link B Used = No

BASIC: Vital Comms links
Vital Comms link 1 Used = No
Vital Comms link 2 Used = No

PREDICTORS: track 1
Track 1 : Prime Used = Yes
Track 1 : Dax A Used = No
Track 1 : Dax B Used = No
Track 1 : Dax C Used = No
Track 1 : Dax D Used = No
Track 1 : Dax E Used = No
Track 1 : Dax F Used = No
Track 1 : Dax G Used = No

PREDICTORS: track 2
Track 2 : Prime Used = Yes
Track 2 : Dax A Used = No
Track 2 : Dax B Used = No
Track 2 : Dax C Used = No
Track 2 : Dax D Used = No
Track 2 : Dax E Used = No
Track 2 : Dax F Used = No
Track 2 : Dax G Used = No

GCP: track 1
Track 1 : GCP Freq Category = Standard
Track 1 : GCP Frequency = 211 Hz
Track 1 : Approach Distance = 3080 ft
Track 1 : Unl/Bl/Sim-Bidirnl = Unidirnl
Track 1 : GCP Transmit Level = High
Track 1 : Island Connection = Isl1
Track 1 : Island Distance = 157 ft
Track 1 : Computed Distance = 9999 ft
Track 1 : Linearization Steps = 100

GCP: track 1 enhanced det
Track 1 : Inbound PS Sensitivity = High
Track 1 : Speed Limiting Used = Yes
Track 1 : Outbound False Act Lvl = Normal
Track 1 : Outbound PS Timer = 20 sec
Track 1 : Trailing Switch Logic = On
Track 1 : Post Joint Detn Time = 15 sec
Track 1 : Adv Appr Predn = No
Track 1 : Cancel Pickup Delay = This Isl

GCP: track 1 prime
Track 1 : Prime Warning Time = 25 sec
Track 1 : Prime Offset Distance = 0 ft
Track 1 : Switch MS EZ Level = 10
Track 1 : Prime MS/GCP Mode = Pred
Track 1 : Prime Pickup Delay = 30 sec
Track 1 : Prime UAX = Not Used

GCP: track 1 pos start
Track 1 : Positive Start = Off
Track 1 : Sudden Shnt Det Used = No
Track 1 : Low EZ Detection Used = No

GCP: track 1 MS Control
Track 1 : MS/GCP Ctrl IP Used = No
Track 1 : MS Sensitivity Level = 0
Track 1 : Compensation Level = 1300
Track 1 : Warn Time-Ballast Comp = High
Track 1 : Low EX Adjustment = 39
Track 1 : Bidirn Dax Passthru = No
Track 1 : False Act on Train Stop = No
Track 1 : EX Limiting Used = Yes
Track 1 : EZ Correction Used = Yes

GCP: track 2
Track 2 : GCP Freq Category = Standard
Track 2 : GCP Frequency = 211 Hz
Track 2 : Approach Distance = 3080 ft
Track 2 : Unl/Bl/Sim-Bidirnl = Unidirnl
Track 2 : GCP Transmit Level = High
Track 2 : Island Connection = Isl1
Track 2 : Island Distance = 0 ft
Track 2 : Computed Distance = 9999 ft
Track 2 : Linearization Steps = 100

GCP: track 2 enhanced det
Track 2 : Inbound PS Sensitivity = High
Track 2 : Speed Limiting Used = Yes
Track 2 : Outbound False Act Lvl = Normal
Track 2 : Outbound PS Timer = 20 sec
Track 2 : Trailing Switch Logic = On
Track 2 : Post Joint Detn Time = 15 sec
Track 2 : Adv Appr Predn = No
Track 2 : Cancel Pickup Delay = This Isl

GCP: track 2 prime
Track 2 : Prime Warning Time = 25 sec
Track 2 : Prime Offset Distance = 0 ft
Track 2 : Switch MS EZ Level = 10
Track 2 : Prime MS/GCP Mode = Pred
Track 2 : Prime Pickup Delay = 30 sec
Track 2 : Prime UAX = Not Used

GCP: track 2 pos start
Track 2 : Positive Start = Off
Track 2 : Sudden Shnt Det Used = No
Track 2 : Low EZ Detection Used = No

GCP: track 2 MS Control
Track 2 : MS/GCP Ctrl IP Used = No
Track 2 : MS Sensitivity Level = 0
Track 2 : Compensation Level = 1300
Track 2 : Warn Time-Ballast Comp = Low
Track 2 : Low EX Adjustment = 39
Track 2 : Bidirn Dax Passthru = No
Track 2 : False Act on Train Stop = No
Track 2 : EX Limiting Used = Yes
Track 2 : EZ Correction Used = Yes

ISLAND: track 1
Track 1 : Isl Frequency = 13.2 kHz
Track 1 : Pickup Delay (2s +) = 0 sec
Track 1 : Isl Enable IP Used = No

AND: track Anding
AND 1 XR Used = Yes
AND 2 Used = No
AND 3 Used = No
AND 4 Used = No
AND 5 Used = No
AND 6 Used = No
AND 7 Used = No
AND 8 Used = No

AND: AND 1 XR
AND 1 XR Track 1 = Prime
AND 1 XR Track 2 = Prime
AND 1 Enable Used = Yes
And 1 Enable Pickup = 0 sec
AND 1 Enable Drop = 0 sec
AND 1 Wrap Used = No

ADVANCED: MS restart
MS/GCP Restart Used = No

ADVANCED: out of service
OOS Control = OOS IPs

ADVANCED: out of service 2
T1 OOS Control = OOS Input 1
T2 OOS Control = OOS Input 1
T1 OOS Controls = GCP and Island
T2 OOS Controls = GCP Only

ADVANCED: track wrap circuits
Wrap LOS Timer = 5 sec
Track 1 Wrap Used = No
Track 2 Wrap Used = No

ADVANCED: trk 1 overrides
Track 1 : All Predictors Override Used = No

ADVANCED: trk 2 overrides
Track 2 : All Predictors Override Used = No

ADVANCED: OR logic
OR 1 Used = No
OR 2 Used = No
OR 3 Used = No
OR 4 Used = No

ADVANCED: Internal I/O 1
Pass Thrus = No
Int.1 Sets = Not Used
Int.1 Set by = Not Used
Int.2 Sets = Not Used
Int.2 Set by = Not Used
Int.3 Sets = Not Used
Int.3 Set by = Not Used
Int.4 Sets = Not Used
Int.4 Set by = Not Used

ADVANCED: Internal I/O 2
Int.5 Sets = Not Used
Int.5 Set by = Not Used
Int.6 Sets = Not Used
Int.6 Set by = Not Used
Int.7 Sets = Not Used
Int.7 Set by = Not Used
Int.8 Sets = Not Used
Int.8 Set by = Not Used

ADVANCED: Internal I/O 3
Int.9 Sets = Not Used
Int.9 Set by = Not Used
Int.10 Sets = Not Used
Int.10 Set by = Not Used
Int.11 Sets = Not Used
Int.11 Set by = Not Used
Int.12 Sets = Not Used
Int.12 Set by = Not Used

ADVANCED: Internal I/O 4
Int.13 Sets = Not Used
Int.13 Set by = Not Used
Int.14 Sets = Not Used
Int.14 Set by = Not Used
Int.15 Sets = Not Used
Int.15 Set by = Not Used
Int.16 Sets = Not Used
Int.16 Set by = Not Used

ADVANCED: site options
Daylight Savings = On
Units = Standard
Maint Call Rpt IP Used = No
Emergency Activate IP = No
EZ/EX Logging = Change
EZ/EX Point Change = 3

SSCC
Gates Used = Yes
SSCC1*2 GPs Coupled = Yes
Min Activation = 20 sec
Rmt Activation Cancel = 3 min
Bell On Gate Rising = No
Mute Bell On Gate Down = No
SSCCIV Controller Used = No

SSCC: 1
SSCC-1 Activation = AND 1 XR
SSCC-1 Gate Delay = 3 sec
SSCC-1 Number of GPs = 1
SSCC-1 Number of GDs = 1
SSCC 1 : Flash Rate = 60
SSCC 1 : Low Battery Detection = No
SSCC 1 : Flash Sync = master
SSCC 1 : Invert Gate Output = No
SSCC 1 : Lamp Neutral Test = Off
Aux-1 Xng Ctrl Used = No

SSCC: 2
SSCC-2 Activation = AND 1 XR
SSCC-2 Gate Delay = 3 sec
SSCC-2 Number of GPs = 0
SSCC-2 Number of GDs = 1
SSCC 2 : Flash Rate = 60
SSCC 2 : Low Battery Detection = No
SSCC 2 : Flash Sync = slave
SSCC 2 : Invert Gate Output = No
SSCC 2 : Lamp Neutral Test = Off
Aux-2 Xng Ctrl Used = No

OUTPUT: assignment page 1
OUT 1.1 = Not Used
OUT 1.2 = Not Used
OUT 2.1 = Not Used
OUT 2.2 = Not Used

INPUT: assignment page 1
IN 1.1 = Not Used
IN 1.2 = Not Used
IN 2.1 = Not Used
IN 2.2 = Not Used

IO: assignment SSCC
OUT GC 1 = Gate Output 1
OUT GC 2 = Gate Output 2
IN 7.1 = AND 1 XR Enable
IN 7.2 = Not Used
IN 7.3 = Not Used
IN 7.4 = GD 1.1
IN 7.5 = GP 1.1
IN 8.1 = Out Of Service IP 1
IN 8.2 = Not Used
IN 8.3 = Not Used
IN 8.4 = GD 2.1
IN 8.5 = Not Used

SEAR
SEAR Subnode = 99
DI 1 = General1
DI 2 = Gnd Flt Tester 1
Rly 1 = Ground Fault Test
Rly 2 = AC Control

SEAR: Inputs
SP 2.1 = POK 1
SP 3.1 = Not Used
SP 4.1 = Not Used
SP 5.1 = Not Used
SP 6.1 = Not Used

SEAR: slot 1-4 Inputs
IN 1.1 = Not Used
IN 1.2 = Not Used
IN 2.1 = Not Used
IN 2.2 = POK 2
IN 3.1 = Not Used
IN 3.2 = Not Used
IN 4.1 = Not Used
IN 4.2 = Not Used

SEAR: Inputs slot 5
IN 5.1 = Not Used
IN 5.2 = Not Used

SEAR: Inputs slot 6
IN 6.1 = Not Used
IN 6.2 = Not Used

SEAR: slot T-8 Inputs
IN 7.2 = Not Used
IN 7.3 = TSS 1
IN 8.2 = Not Used
IN 8.3 = TSS 2
IN 8.5 = General2

SITE: programming
Radio Subnode = 1
Field Password = Off
Low Battery Enabled = Off

Configuration Package File

Filename: 296094W.pac

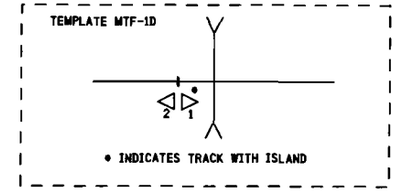

NOTES:

1) DISTANCE(S) TO BE VERIFIED AT INSTALLATION.
INDICATE SELECTED PROGRAMMED VALUE IF DIFFERENT THAN SHOWN.
REFER TO 4000 GCP INSTRUCTION/INSTALLATION MANUAL
FOR PROGRAMMING PARAMETERS.

2) PROGRAM TEXT HIGHLITED IN RED INDICATES 4000 PROGRAM
MODIFICATIONS TO DEFAULT PROGRAM VALUES.

3) EACH CONSTANT WARNING DEVICE SYSTEM TO BE PROGRAMMED TO
CONVERT TO A MOTION SENSOR 300 FEET FROM EDGE OF ROAD
TRAVELLED WAY.
SHUNT TRACK 300 FEET FROM EDGE OF ROAD TRAVELLED WAY
AND NOTE "EZ" VALUE.
PROGRAM EACH SYSTEM WITH THE INDICATED "EZ" VALUE +2.

4) VERIFY SET TIMER VALUE TO MATCH ACTUAL TRAIN MOVEMENT
WITHIN THE CROSSING APPROACH CIRCUITS.

PROPOSED
DES. No. _____
RED-IN YELLOW-OUT
AS INSTALLED
DATE _____
BY _____

PROPOSED			REVISIONS	D	C	COMPLETED			C
D	M	Y				D	M	Y	

REGION SOUTHERN
SUB. ST LOUIS 363
CN

SIGNALS AND COMMUNICATIONS HOMEWOOD — DES. APL
3 AUGUST 2009 — CH. MKN

GCP 4000
PROGRAM INFORMATION
PRESS RD - TR 197
FREEBURG, IL

STL-023.02-14

SAFETRAN SYSTEM CORP.
LOUISVILLE DIVISION, LOUISVILLE, KY

SAFETRAN SYSTEMS CORPORATION

DES.: APL	DATE: 08/03/09	JOB NO.: PICA10192	
CKD.: MKN	ISSUE DATE:	EST. NO.:	
DRN.: APL	PLAN NO.:	SHEET 14 OF 16	
P. TIME: 10:34	P. DATE: 26-AUG-2009	CAD ID.: STL-023.02-14	

WATERMARK

REVISIONS				
NO.	DATE	BY	DESCRIPTION	APP. BY
1				
2				
3				
4				
5				

TO CONFIGURE SEARII & SEARIII PRESS SITE SETUP KEY. USE ARROW KEYS TO MAKE SELECTION, PRESS ENTER AFTER SELECTION HAS BEEN MADE.

STAGE 1

PROGRAM MENU QUESTIONS	PROGRAM	OPTIONS/RANGE
DATE/TIME?	CURRENT DATE/TIME	CURRENT DATE/TIME
AUTOMATIC DST ADJUSTMENT?	YES	YES, NO
TIME ZONE?	CENTRAL	EASTERN, CENTRAL, MOUNTAIN, PACIFIC, ALASKA, HAWAII, ATLANTIC, SASKATCHEWAN, NEW FOUNLAND
SITE NAME?	PRESS ROAD	STREET NAME
MILE POST?	23.02	MILEAGE
DOT/CROSSING IS #?	296 094W	
TESTER TYPE?	CROSSING	CROSSING, WAYSIDE
DATE FORMAT?	dd-mm-yyyy	mm-dd-yyyy, dd-mm-yyyy
TEMPERATURE FORMAT?	FAHRENHEIT	FAHRENHEIT, CELSIUS
SITE TYPE?	NO COM	NO COM, BULLHORN, DIALUP, NODE, COLLECTOR
SITE ATCS ADDRESS?	7.620.100.100.99.01	7.RRR.LLL.GGG.99.01
OFFICE ATCS ADDRESS?		2.RRR.NN,DDDD
PRIMARY HOP ADDR? (FOR NODE USE)		7.RRR.LLL.GGG.00.01
BACKUP HOP ADDR1? (FOR NODE USE)		7.RRR.LLL.GGG.00.01
BACKUP HOP ADDR2? (FOR NODE USE)		7.RRR.LLL.GGG.00.01
POLL ID? (FOR NODE USE)		1-99
MODE? (FOR COLLECTOR USE)		GEN/ATCS, GENISYS
WAMS/XID? (FOR COLLECTOR USE)		ENABLED, DISABLE
OFFICE COMM. DEVICE? (FOR COLLECTOR USE)		DIRECT (RS232) MCW (RS232) MCW (ECHELON) SREAD SPEC (ECHELON) DIAL MODEM (RS232) S200 RADIO (RS422)
OFFICE PHONE NUMBER? (FOR COLLECTOR USE)		PHONE NUMBER OF WAMS
INIT STRING? (FOR COLLECTOR USE)		OPTIONAL HAYES MODEM INITIALIZATION STRING
FIELD COMM. DEVICE?		VHF COMM. (ECHELON) VHF COMM. (RS232) SPREAD SPEC (ECHELON) SPREAD SPEC (RS232)
USER PORT?	57600, 8, N, 1, N	BAUD, DATA BITS, PARITY, STOP BITS, FLOW CONTROL
AUX PORT?	9600, 8, N, 1, N	BAUD, DATA BITS, PARITY, STOP BITS, FLOW CONTROL

YOU WILL NOW SEE A MESSAGE "PLEASE WAIT COMPILING STAGE 1"
CONTINUE TO NEXT PROGRAM MENU QUESTIONS.

STAGE 2

QUESTION	PROGRAM	SELECTION 1 (MINIMUM)	SELECTION 2 (MAXIMUM)	CONDITION FOR MENU DISPLAY
RESET NAMES / MODULES ?	NO	YES	NO	ALWAYS
RAILROAD NUMBER ?	360	1	999	ALWAYS
CROSSING CONFIGURATION	NORMAL	NORMAL	SPLIT GATE (NOTE 2)	ALWAYS
ENTRANCE GATES ?	2	0	8	ALWAYS
GATE POSTION FAIL TIME (SECONDS) ?	N/A	10	60	GATES > 0
BATTERY BANKS ?	3	1	3	ALWAYS
BATT MON USED ?	NO	NO	YES	ALWAYS
INTERNAL CROSSING CONTROLLERS ?	2	0	2	ALWAYS
EXTERNAL CROSSING CONTROLLERS ?	0	0	2	CROSSING CONTROLLER = YES
VHF COMMUNICATOR ?	YES	YES	NO	ALWAYS
DTMF ACTIVATION?	NO	NO	YES	RAILROAD = 360
ACTIVATION CODE ?	N/A	1	999	VHF COMMUNICATOR = YES
ACTIVATION TIMEOUT ?	N/A	1	600	VHF COMMUNICATOR = YES
ILOD MODULES ?	2	0	4	ALWAYS
ANY LED BULBS USED ?	YES	NO	YES	ILOD MODULES > 0
AUTO INSPECTION ?	NO	YES	NO	ALWAYS
BELL SENSORS ?	1	0	8	ALWAYS
BELL SENSORS TSS1 ?	YES	NO	YES	BELL SENSORS > 0
BELL SENSORS TSS2 ?	N/A	NO	YES	BELL SENSORS > 0
BELL SENSORS TSS3 ?	N/A	NO	YES	BELL SENSORS > 0
BELL SENSORS TSS4 ?	N/A	NO	YES	BELL SENSORS > 0
BELL SENSORS TSS5 ?	N/A	NO	YES	BELL SENSORS > 0
BELL SENSORS TSS6 ?	N/A	NO	YES	BELL SENSORS > 0
BELL SENSORS TSS7 ?	N/A	NO	YES	BELL SENSORS > 0
BELL SENSORS TSS8 ?	N/A	NO	YES	BELL SENSORS > 0
BELL ON ?	GATES LOWERING	GATES LOWERING	GATES MOVING	BELL SENSORS > 0
GFT'S ?	YES	YES	NO	ALWAYS
BATTERIES ON GFT1 ?	2	1	2	GFT'S = YES
GATE TIP SENSORS ?	YES	YES	NO	GATES > 0
RTU ?	NO	NO	YES	ALWAYS
VHF VOICE CHANNEL ?	1 (NOTE 1)	1	8	VHF COMMUNICATOR = YES
VHF DATA CHANNEL ?	1 (NOTE 1)	1	8	VHF COMMUNICATOR = YES
USE CELL MODEM NON-CRITICAL FEATURE ?	NO	NO	YES	ALWAYS
FULL APPROACH MOVE ALARMS ?	ACTIVATE	ACTIVATE	DO NOT ACTIVATE	ALWAYS

YOU WILL NOW SEE A MESSAGE "PLEASE WAIT COMPILING STAGE 2"
CONTINUE TO NEXT PROGRAM MENU QUESTIONS.

STAGE 3

PROGRAM MENU QUESTIONS	PROGRAM
EDIT DIGITAL INPUTS	NO
EDIT BATTERIES	NO
EDIT RELAYS	NO
EDIT TEST LEDS	NO
EDIT ILOD SENSORS	NO
EDIT VHF SETTINGS	NO
GCP4K ATCS SUBNODE?	16

SAVE CONFIGURATION

NOTES:

1) INDICATE SELECTION IN SPACE PROVIDED.
2) ADDITIONAL OPTIONS: DUAL CROSSING, EXTERNAL ENTRANCE GATE CONTROLLERS.

PROPOSED
DES. No. _____
RED-IN YELLOW-OUT
AS INSTALLED
DATE _____
BY _____

SEARIII EXECUTIVE 9V725 REV. A01U, SEARIII APPLICATION 9V864 REV. A01J

PROPOSED D	M	Y	REVISIONS	D	C	COMPLETED D	M	Y	C

REGION SOUTHERN
SUB. ST LOUIS 363
CN
SIGNALS AND COMMUNICATIONS HOMEWOOD
DES. APL
3 AUGUST 2009
CH. MKN
GCP 4000/SEAR III
SETUP AND PROGRAM
PRESS RD - TR 197
FREEBURG, IL
STL-023.02-15

SAFETRAN SYSTEM CORP.
LOUISVILLE DIVISION, LOUISVILLE, KY

SAFETRAN SYSTEMS CORPORATION
DES.: APL DATE: 08/03/09 JOB NO.: PICA10192
CKD.: MKN ISSUE DATE: EST. NO.:
DRN.: APL PLAN NO.: SHEET 15 OF 16
P TIME: 10:34 P DATE: 26-AUG-2009 CAD ID.: STL-023.02-15

STL-023.02-15.dgn
26-AUG-2009

WATERMARK

NO.	DATE	BY	REVISION DESCRIPTION	APPR. BY
1				
2				
3				
4				
5				

STL-023.02-16.dgn
26-AUG-2009

CALIBRATION HISTORY

INITIAL SET UP BY: _____ DATE: _____

DC VOLTAGE READINGS AFTER CALIBRATION				CALIBRATION HISTORY										LINEARIZATION HISTORY (NOTE 1)							
				EZ/EX VALUES (TRACK UNOCCUPIED)				HARD WIRE SHUNT AT TERMINATION SHUNT						HARD WIRE SHUNT AT 50 PERCENT POINT OF SHUNT							
				EZ		EX		EZ		EX		50 PERCENT OF EZ VALUE		NO LINEARIZATION				LINEARIZATION COMPLETE			
														EZ		EX		STEP±		EZ	
				NRML	STBY	NRML	STBY	NRML	STBY	NRML	STBY	NRML	STBY	NRML	STBY	NRML	STBY	NRML	STBY	NRML	STBY
T1	Z1=	NORTH	TRACK 1																		
	Z2=	SOUTH	TRACK 1																		
T2	Z1=	NORTH	TRACK 2																		
	Z2=	SOUTH	TRACK 2																		

CALIBRATION HISTORY

INITIAL SET UP BY: _____ DATE: _____

DC VOLTAGE READINGS AFTER CALIBRATION				CALIBRATION HISTORY										LINEARIZATION HISTORY (NOTE 1)							
				EZ/EX VALUES (TRACK UNOCCUPIED)				HARD WIRE SHUNT AT TERMINATION SHUNT						HARD WIRE SHUNT AT 50 PERCENT POINT OF SHUNT							
				EZ		EX		EZ		EX		50 PERCENT OF EZ VALUE		NO LINEARIZATION				LINEARIZATION COMPLETE			
														EZ		EX		STEP±		EZ	
				NRML	STBY	NRML	STBY	NRML	STBY	NRML	STBY	NRML	STBY	NRML	STBY	NRML	STBY	NRML	STBY	NRML	STBY
T1	Z1=	NORTH	TRACK 1																		
	Z2=	SOUTH	TRACK 1																		
T2	Z1=	NORTH	TRACK 2																		
	Z2=	SOUTH	TRACK 2																		

CALIBRATION HISTORY

INITIAL SET UP BY: _____ DATE: _____

DC VOLTAGE READINGS AFTER CALIBRATION				CALIBRATION HISTORY										LINEARIZATION HISTORY (NOTE 1)							
				EZ/EX VALUES (TRACK UNOCCUPIED)				HARD WIRE SHUNT AT TERMINATION SHUNT						HARD WIRE SHUNT AT 50 PERCENT POINT OF SHUNT							
				EZ		EX		EZ		EX		50 PERCENT OF EZ VALUE		NO LINEARIZATION				LINEARIZATION COMPLETE			
														EZ		EX		STEP±		EZ	
				NRML	STBY	NRML	STBY	NRML	STBY	NRML	STBY	NRML	STBY	NRML	STBY	NRML	STBY	NRML	STBY	NRML	STBY
T1	Z1=	NORTH	TRACK 1																		
	Z2=	SOUTH	TRACK 1																		
T2	Z1=	NORTH	TRACK 2																		
	Z2=	SOUTH	TRACK 2																		

NOTE:

1) **SET UP APPROACH LENGTH AND LINEARIZATION CALIBRATION**
VERIFY THAT "ENHANCED DETECTION" MODE IS PROGRAMMED "OFF" BEFORE ATTEMPTING LINEARIZATION PROCEDURES.

PROPOSED
DES. No. _____
RED-IN YELLOW-OUT
AS INSTALLED
DATE _____
BY _____

PROPOSED D	M	Y	REVISIONS	D	C	COMPLETED D	M	Y	C

REGION SOUTHERN
SUB. ST LOUIS 363
CN

SIGNALS AND COMMUNICATIONS HOMEWOOD | DES. APL
3 AUGUST 2009 | CH. MKN

GCP 4000
CALIBRATION HISTORY
PRESS RD - TR 197
FREEBURG, IL

STL-023.02-16

16

SAFETRAN SYSTEM CORP.
LOUISVILLE DIVISION, LOUISVILLE, KY

SAFETRAN SYSTEMS CORPORATION

DES.: APL	DATE: 08/03/09	JOB NO.: PICA10192	
CKD.: MKN	ISSUE DATE:	EST. NO.:	
DRN.: APL	PLAN NO.:	SHEET 16 OF 16	
P TIME: 10:34	P DATE: 26-AUG-2009	CAD ID.: STL-023.02-16	

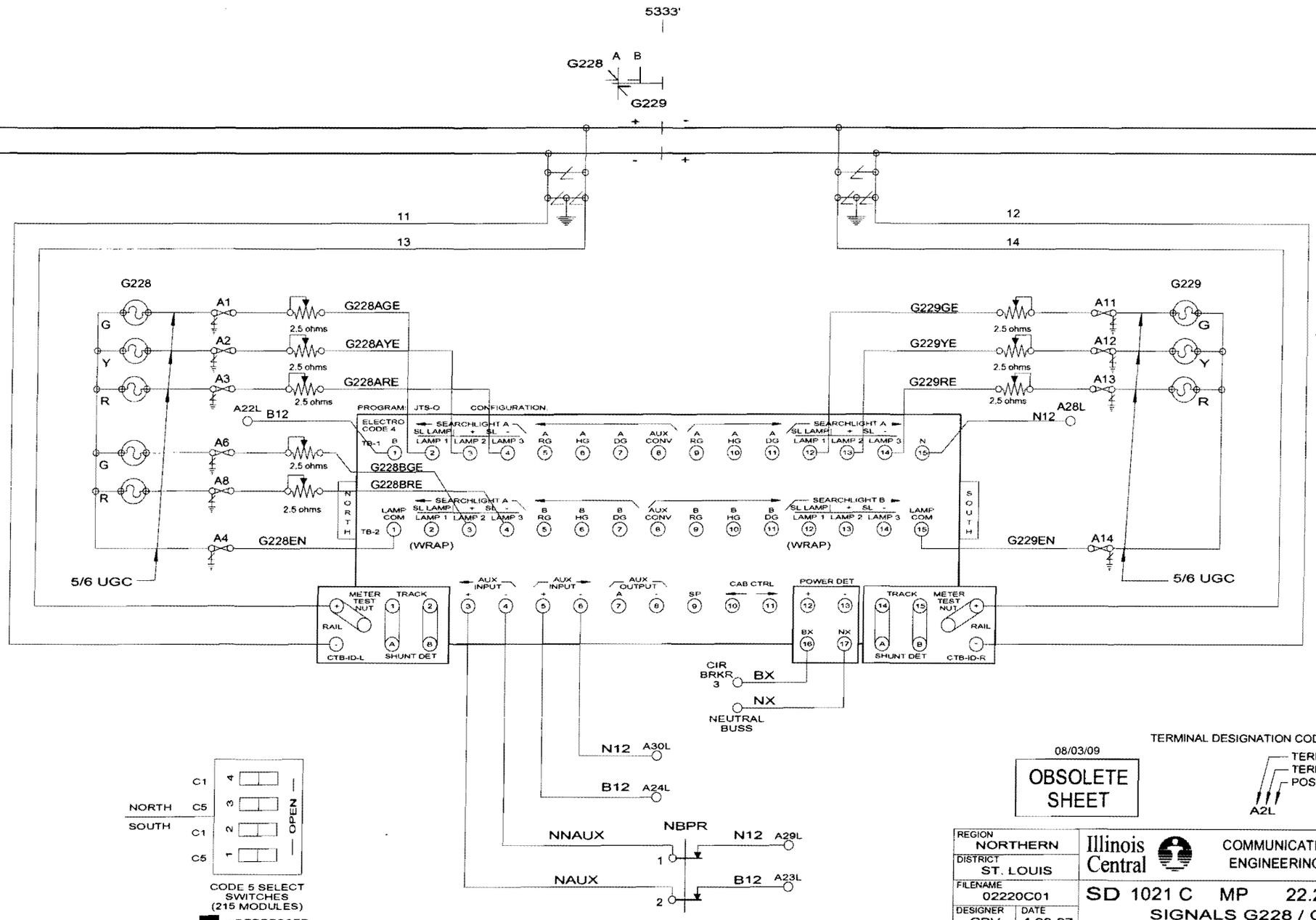
5333'
5344'
G228
A B
G229
11
12
13
14
G 2 3
G228
G229
A1
A2
A3
A6
A8
A4
A11
A12
A13
A14
G228AGE
G228AYE
G228ARE
G228BGE
G228BRE
G228EN
G229GE
G229YE
G229RE
G229EN
2.5 ohms
A22L
B12
A28L
N12
PROGRAM: JTS-Q
CONFIGURATION:
ELECTRO CODE 4
SEARCHLIGHT A
SEARCHLIGHT B
SL LAMP
LAMP 1
LAMP 2
LAMP 3
LAMP COM
(WRAP)
NORTH
SOUTH
5/6 UGC
METER TEST NUT
TRACK
RAIL
CTB-ID-L
CTB-ID-R
SHUNT DET
AUX INPUT
AUX OUTPUT
CAB CTRL
POWER DET
BX
NX
CIR BRKR 3
NEUTRAL BUSS
N12 A30L
B12 A24L
NNAUX
NAUX
NBPR
N12 A29L
B12 A23L
NORTH
SOUTH
C1
C5
OPEN
CODE 5 SELECT SWITCHES (215 MODULES)
= DEPRESSED
08/03/09
OBSOLETE SHEET
TERMINAL DESIGNATION CODE:
TERMINAL STRIP
TERMINAL NUMBER
POSITION (LEFT OR RIGHT)
A2L
REGION NORTHERN
DISTRICT ST. LOUIS
FILENAME 02220C01
DESIGNER CBV
DATE 4-28-97
SHEET NO. 1 OF 4
Illinois Central
COMMUNICATIONS & SIGNALS, ENGINEERING DEPARTMENT
SD 1021 C MP 22.2 TO 24.0
SIGNALS G228 / G229
ECODE4 - JTS-Q
REVISED FROM RECORD NO INSPECTION RCVD
REVISIONS

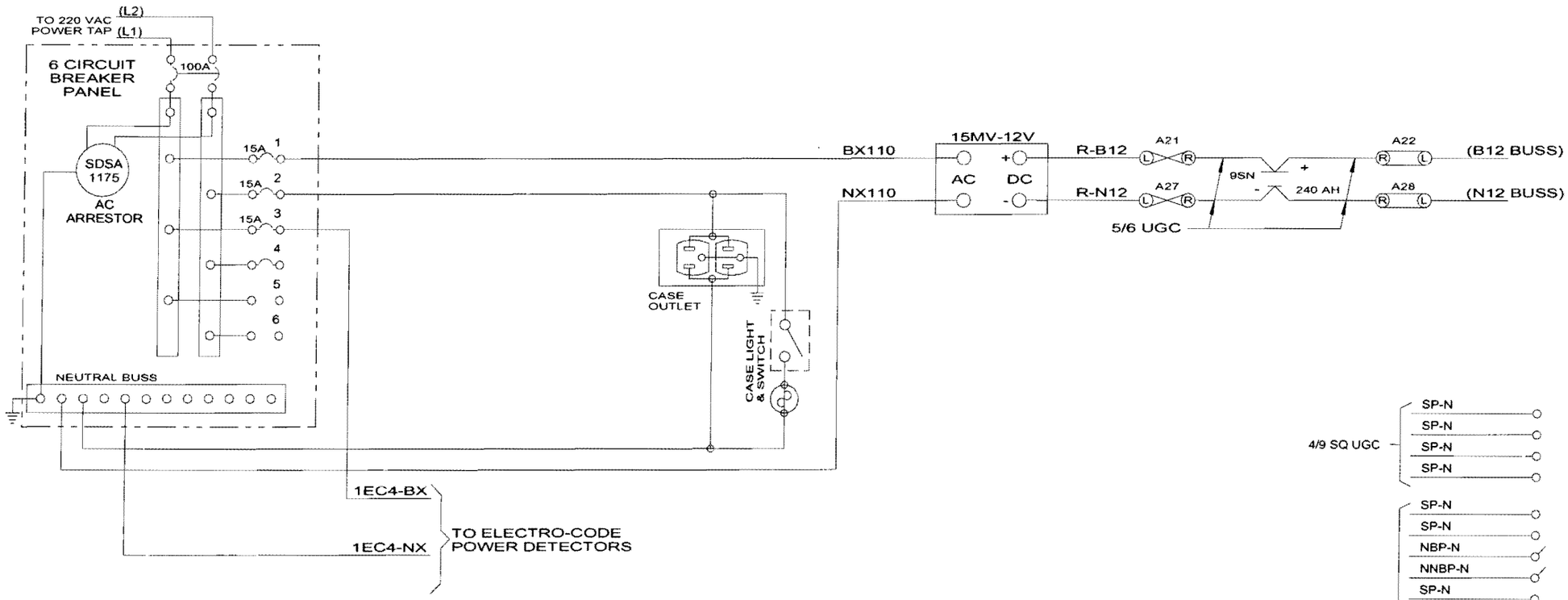

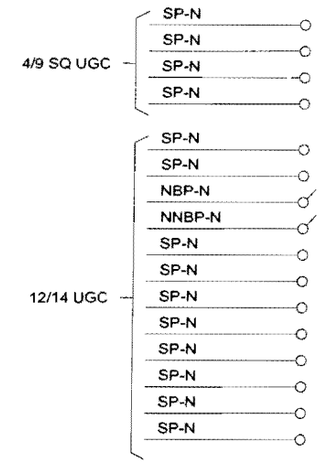

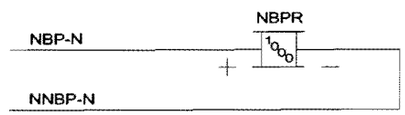

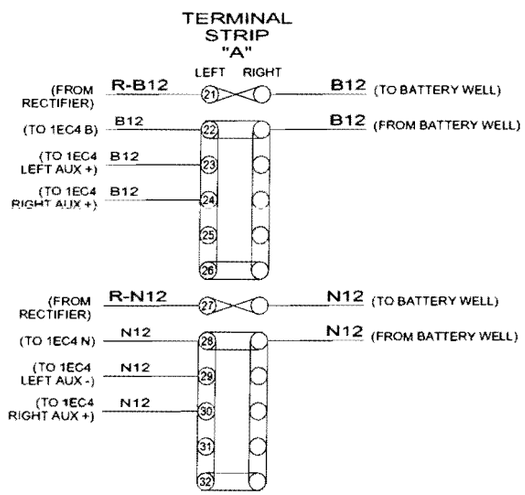

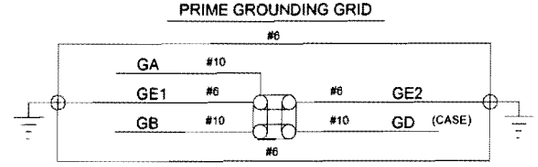

= STRAP & TEST NUT

08/03/09

OBSOLETE SHEET

REGION NORTHERN	Illinois Central — COMMUNICATIONS & SIGNALS, ENGINEERING DEPARTMENT
DISTRICT ST. LOUIS	SD 1021 C MP 22.2 TO 24.0
FILENAME 02220C02	SIGNALS G228 / G229
DESIGNER CBV / DATE 4-28-97	POWER SUPPLY
SHEET NO. 2 OF 4	

5 4 3 2 1 REVISIONS

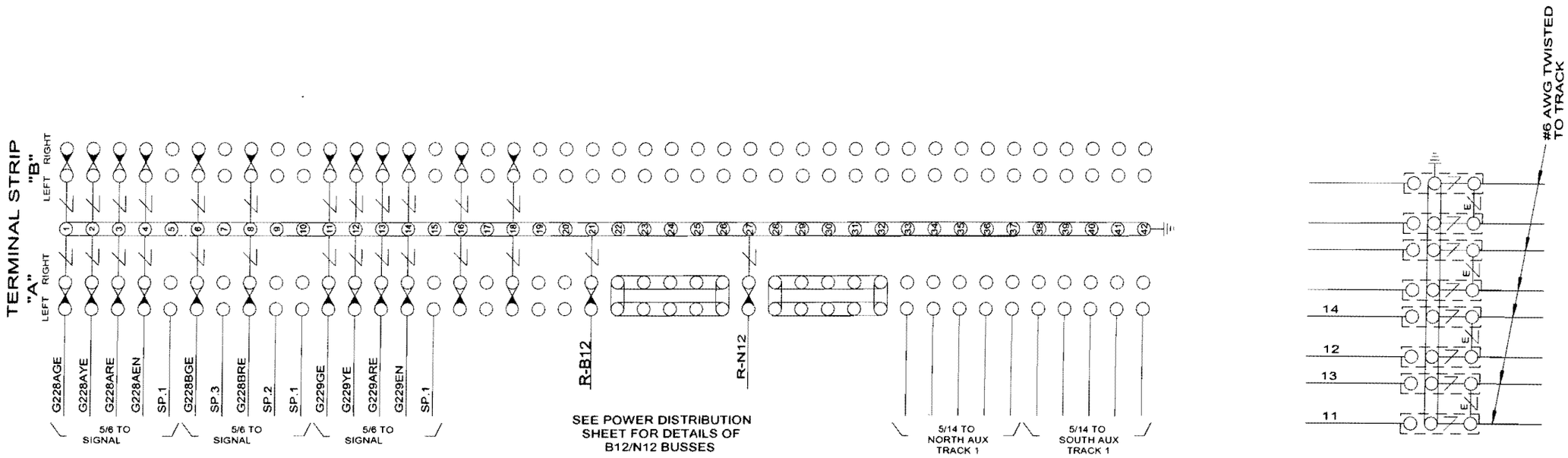

08/03/09

OBSOLETE SHEET

= STRAP & TEST NUT

REGION NORTHERN	Illinois Central — COMMUNICATIONS & SIGNALS, ENGINEERING DEPARTMENT
DISTRICT ST. LOUIS	SD 1021 C MP 22.2 TO 24.0
FILENAME 02220C03	SIGNALS G228 / G229
DESIGNER CBV / DATE 4-28-97	TERMINAL BOARD
SHEET NO. 3 OF 4	

5 4 3 2 1 REVISIONS

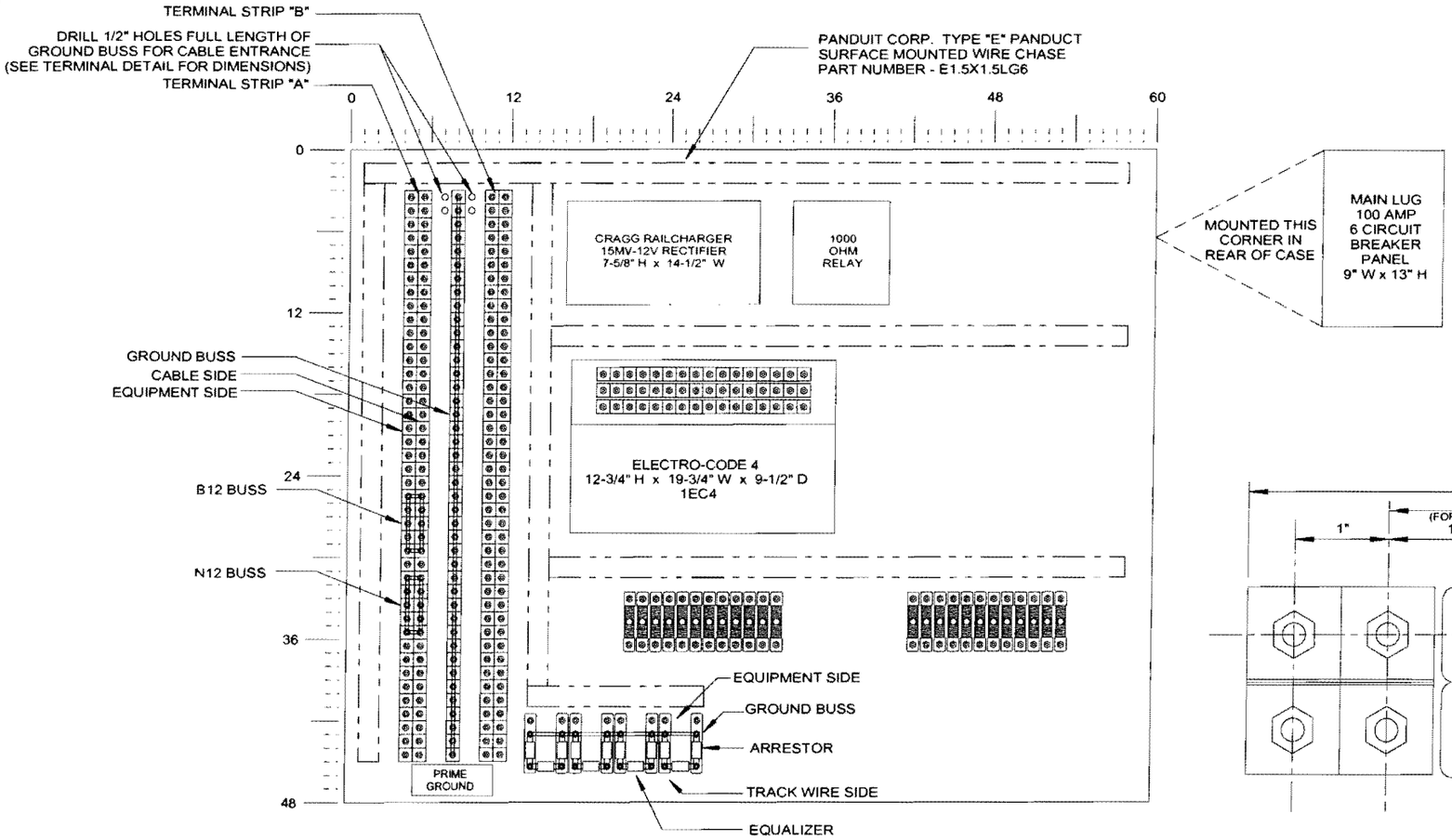

QTY	DESCRIPTION
2	EC 4 PROGRAM JTSQ CONFIGURATION A
1	CRAGG 15MV RECTIFIER
8	PORCELAIN ARRESTOR BLOCKS
16	VARIABLE RESISTORS 2.5 OHMS
15	12 POST SINGLE TERMINAL STRIP
3	36" TERMINAL STRAPPING
	1" INSULATED TEST STRAPS
20	H.D. LINE ARRESTORS
8	H.D.TRACK ARRESTORS
4	EQUALIZERS
1	CIRCUIT BREAKER PANEL
1	DUPLEX AC OUTLET
1	CASE LIGHT
5	PANDUIT WIRE DUCT E15X15LG6

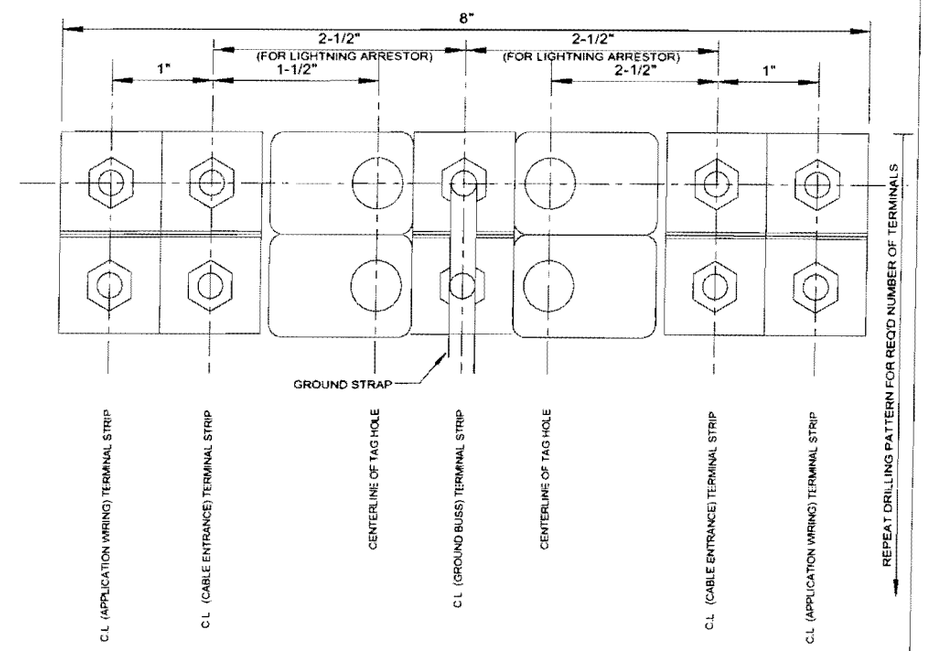

08/03/09

OBSOLETE SHEET

REGION NORTHERN	Illinois Central — COMMUNICATIONS & SIGNALS, ENGINEERING DEPARTMENT
DISTRICT ST. LOUIS	SD 1021 C MP 22.2 TO 24.0
FILENAME 03330C04	SIGNALS G228 / G229
DESIGNER CBV / DATE 5-12-97	RACK LAYOUT
SHEET NO 4 OF 4	

5 4 3 2 1 REVISIONS