Consideration: I have proposed the P.U. Delays here for 70mph eastbound leaving the yard. If a lesser speed of maybe 60mph is more common then adjust to: 10sec + 7sec (only increase length of AHS)

Set DAX P.U. Delays for HWY 47-10: 7 seconds

Set LAX P.U. Delays for 1st Street to: 6 seconds

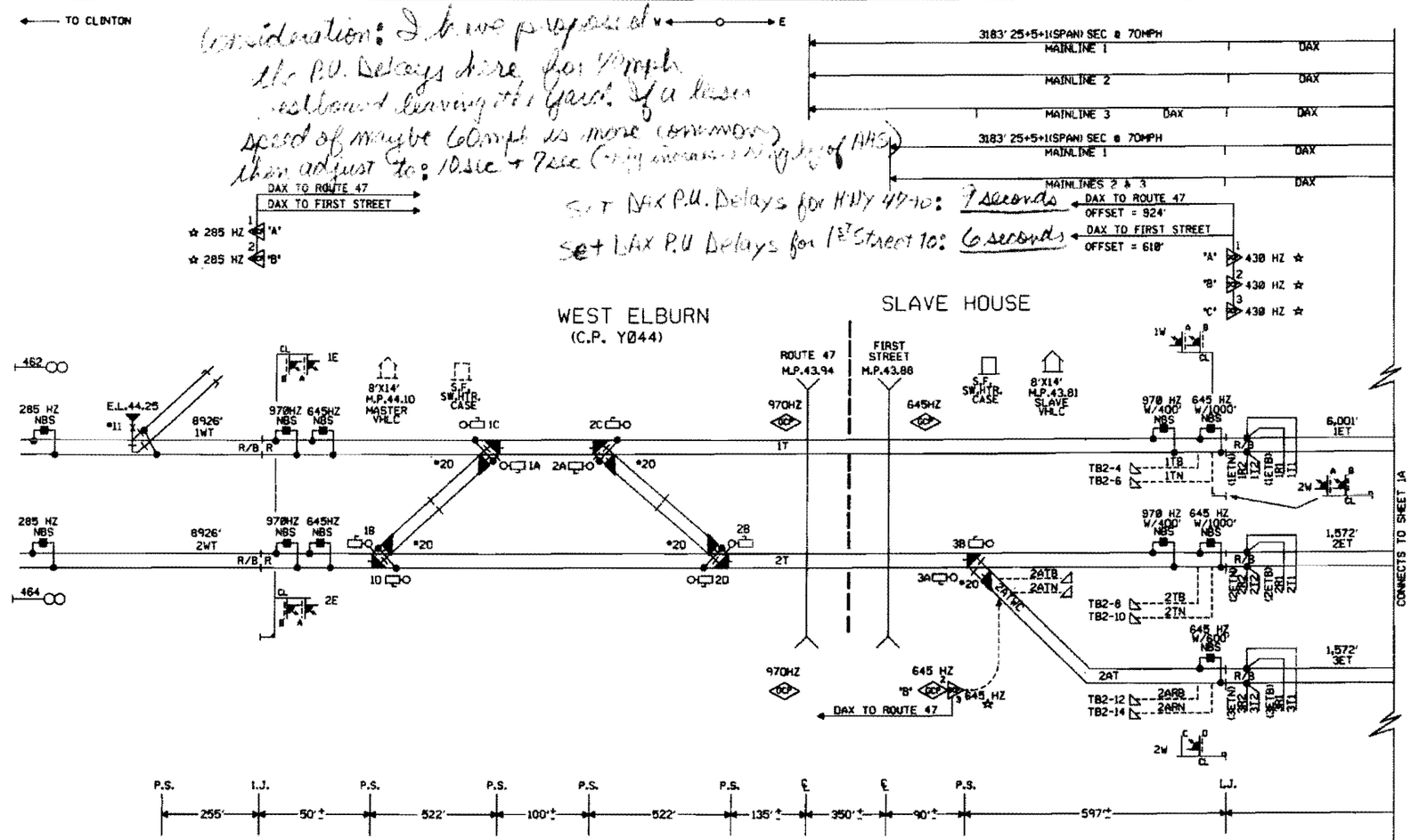

Proposal to Reduce ring-ing of AHS in Elburn
9-1-09

NOTES:

⊗ = TWISTED WIRES
ALL TRACK WIRES 2C, #6 INSULATED 1 TWIST PER FT.

TRANSMITTER AND RECEIVER LEADS TO BE SEPARATED BY AT LEAST 12" IN TRENCH. LENGHTS SHOULD NOT EXCEED MANUFACTURES RECOMMENDATION.

ALL BUNGALOW WIRING TO BE #16 AWG FLEX UNLESS OTHERWISE SPECIFIED EXCEPT ALL GROUND WIRE TO BE #6 AWG FLEX OR LARGER.

REFER TO UP STANDARD DWG. FOR BUNGALOW GROUNDING

☆ = GCP TO OPERATE IN SIMULATED BI-DIRECTIONAL MODE. USE TAB 627 COUPLER.

⊘ = OBSERVE CORRECT POLARITY. EQUIPMENT WILL BE DAMAGED IF CONNECTIONS ARE REVERSED

ALL WIRING TO TRACK 2C. NO.6 U.G.B.T. CABLE, UNLESS OTHERWISE SPECIFIED.

ALL CASE WIRING TO BE NO.16 UNLESS OTHERWISE SPECIFIED. FOR MASTER VHLC HOUSE CABLE TABULATION SEE SH.3

ALL GROUND CONNECTIONS TO BE #6 OR LARGER. SIGNAL WIRING SHOP TO RUN ALL GROUND CONNECTIONS.

ENSURE TRACK POLARITY IS TRANSPOSED ACROSS ALL INSULATED JOINTS.

⧗ = TEST TERMINALS MUST BE INSTALLED ON ALL WIRING CONNECTED TO EXTERNAL CABLES (EXCEPT TRACK AND A.C. POWER WIRES).

0001
3 8 8 1 3 9

WEST ELBURN
GENEVA SUB.
M.P.43.81
SW.3
SIGNALS 1W, 2W
8'X14' VHLC SLAVE HOUSE

2 REV. 4-3-06 FIX CHAINING STATIONS PER REV. FACILITY PLANNING MAP M.P. 32.0 TO 45.09 REC#13807 5-4-06 RCB MJD/NST/CTC/RCB	1 REV. 4-3-06 ELBURN - ADD MAINLINE W.O.02810 REC#13807 5-4-06 JJL MJD/NST/RC/DAB
MODIFICATION LEVEL	
Q.A. LAST LEVEL CHK'D.	00
LAST LEVEL MOD. THIS TYP.	00
LAST LEVEL BY DESIGNER.	00
CHANGED FROM TYP.? Y/N	Y

UNION PACIFIC — QUALITY PROJECT — SIGNAL DESIGN

DES: RC
DIG: RC
CHK: JJL
A.F.E. 02810
ID: GEN4381.IX

UNION PACIFIC RAILROAD
CHICAGO, ILLINOIS TO
CLINTON, IOWA
C.T.C. CIRCUITS
OFFICE OF CHIEF ENG'R SIGNALS — OMAHA NEBR.

DATE 05-03-01
SHEET 1
DWG 43.81
GEN

(REV. 01.02.10) (CNWDXVR.1)

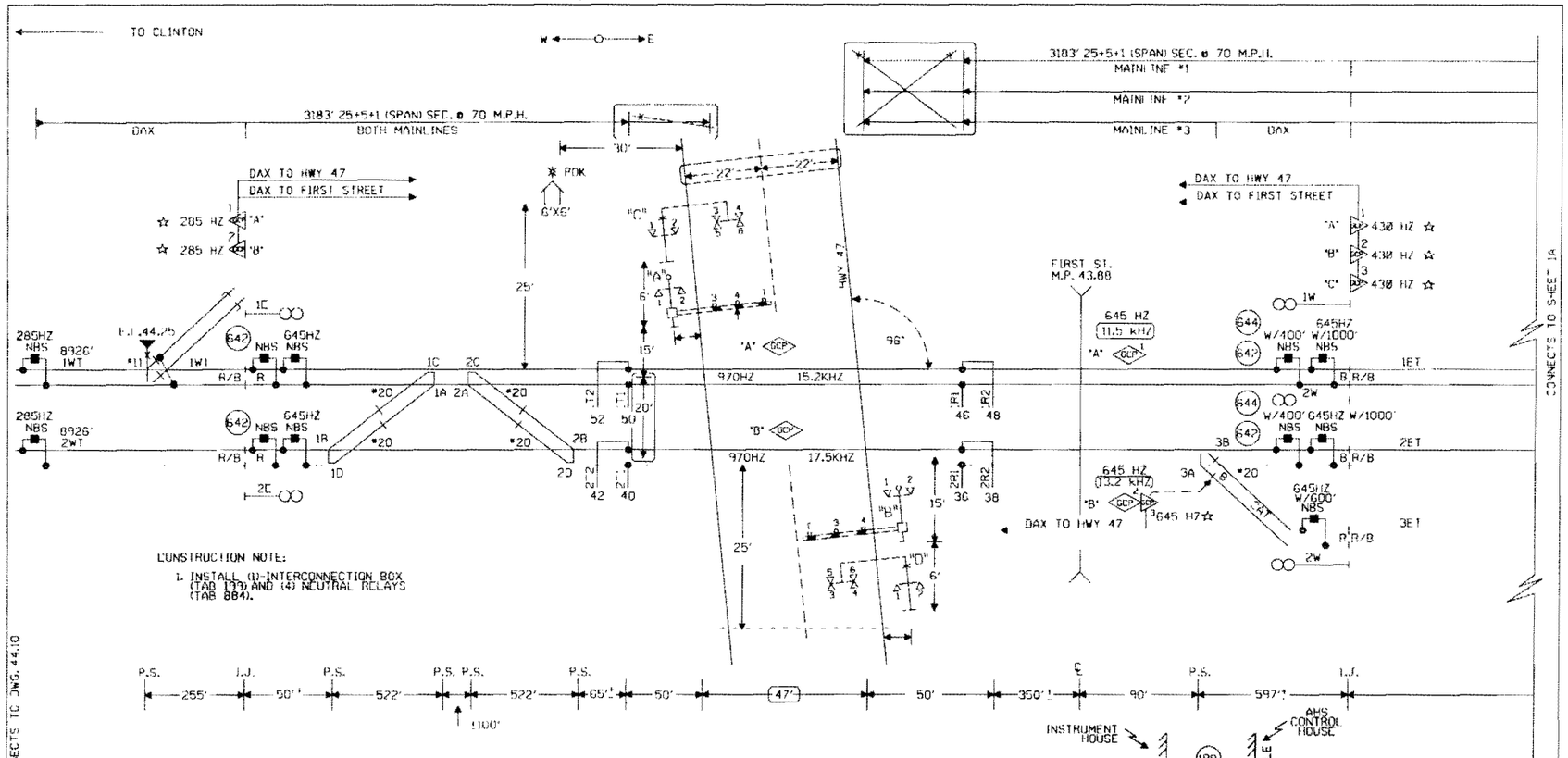

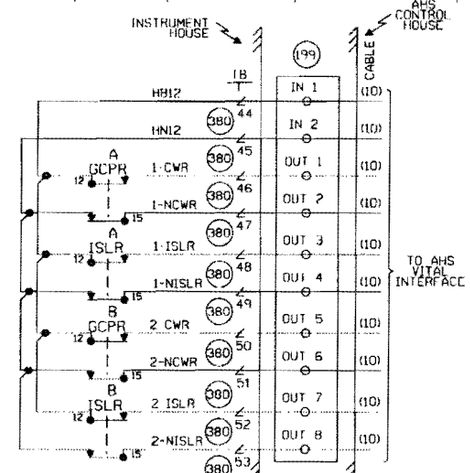

NOTES:

⊗ = TWISTED WIRES INSULATED 1 TWIST PER FT. ALL TRACK WIRES #6, #6

TRANSMITTER AND RECEIVER LEADS TO BE SEPARATED BY AT LEAST 12" IN TRENCH. LENGTHS SHOULD NOT EXCEED MANUFACTURES RECOMMENDATION.

TOP OF FOUNDATION TO BE AT SAME ELEVATION AS THE SURFACE OF THE TRAVELED WAY & NO MORE THAN 4" ABOVE THE SURFACE OF THE GROUND.

ALL BUNGALOW WIRING TO BE #16 AWG FLEX UNLESS OTHERWISE SPECIFIED EXCEPT ALL GROUND WIRE TO BE #6 AWG FLEX OR LARGER.

ALL WIRING IN GATE MECHANISM TO BE #10 AWG FLEX.

REFER TO UP STANDARD DWG FOR BUNGALOW GROUNDING.

DO NOT USE 7 CELLS OF B12 BATTERY UNLESS REQUIRED TO MAINTAIN MINIMUM LAMP VOLTAGE.

ALL LIGHTS TO BE 12" ROUNDELS.

- - - - - - 4" X " CONDUIT

LIGHTS: A, B, C & D 1, 2 LED LIGHTS
C & D 3, 4, 5, 6 LED LIGHTS

GATE "A": '
GATE "B": '
CANT "C": '
CANT "D": '

CRTU MICROBURST

☆ - GCP TO OPERATE IN SIMULATED BI DIRECTIONAL MODE. USE TAB 627 COUPLER.

CABLE TABULATION

CABLE NO.10 U.G.B.T. TO AHS HOUSE (CABLE PROVIDED BY RCL)

◯ - EXISTING, REVISE ORIGINAL IF A.C.'d

——— = IN

—✕—✕— = OUT

CTC/JMW

CLBURN, ILLINOIS
HWY 47
M.P. 43.94
GENEVA SUBDIVISION
D.O.T.#175 009V
~~*PROJ.#~~

3 07 28 08 INSTALL AUTOMATED HORN SYSTEM AT HWY 47 M.P. 43.94 A.F.E. #88145 /CJB / /CTC/JJP	2 REV. 4-3-06 CLBURN ADD MAINLINE W.O.02810 REL#1380/ W-4-06 JJL MJD/NST/RC/DAB	1 REV. 04-09-03 FLY CHATWING STATIONS (MM NEW FACILITY PLANNING MAP. (M.P. 35.0 TO M.P. 45.0) MLB /CTC/CTC/RCB	MODIFICATION LEVEL
			Q.A. LAST LEVEL CHK'D. DD
			LAST LEVEL MOD. THIS TYP. DB
			LAST LEVEL BY DESIGNER. DD
			CHANGED FROM TYP.7 Y/N Y

UNION PACIFIC — SAFETY SIGNAL DESIGN

DES: RC
DIG: RC
CHK: JJL
A.F.E. 02810
ID: GEN4394.1X

UNION PACIFIC RAILROAD
CHICAGO, ILLINOIS TO
CLINTON, IOWA
C.T.C. CIRCUITS
OFFICE OF CHIEF ENG'R OMAHA NEBR.

DATE 05-03-01
SHEET 1
DWG 43.94
GEN

(REV. 01.02.21) (2TUCGTYP.1)

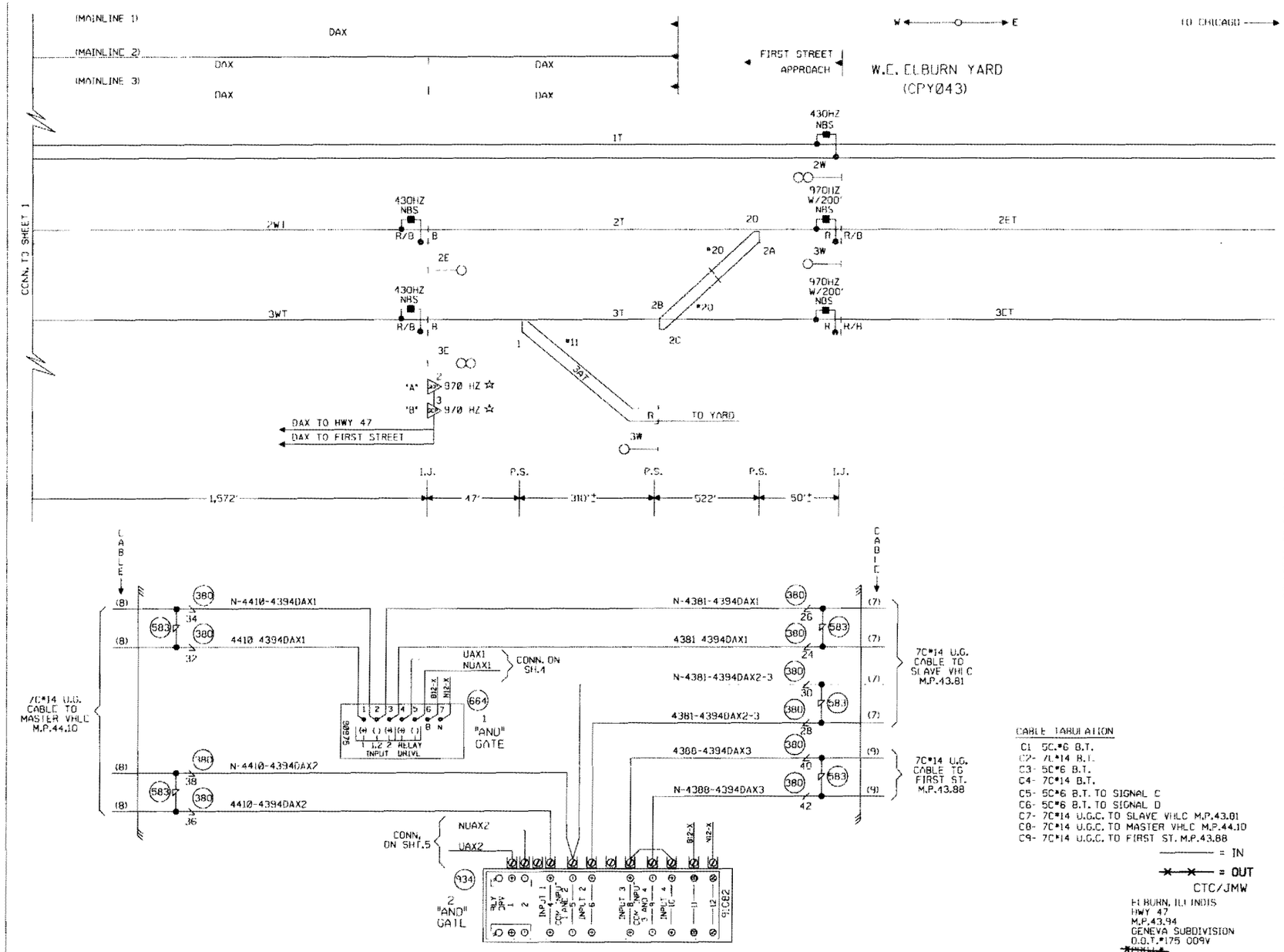

4	07 28 08	INSTALL AUTOMATED HORN SYSTEM AT HWY 47 M.P. 43.94 A.F.E. #88145	/CJB / /CTC/JJF
3	4-3-06	REV. ELBURN ADD MAINLINE	W.O.02810 REC#1380/ JJL 5-4-05 MJD/NST/RC/DAB
2	09-14-03	REV. WIRING SHOP CHANGES MAP: (M.P. 34.70 - M.P. 46.65)	SP/CTC/CTC/RCB
1	04-09-03	REV. FIX CHAINING STATIONS PER NEW FACILITY PLANNING MAP. (M.P. 35.0 TO M.P. 45.0)	RCB /CTC/CTC/RCB

UNION PACIFIC — SAFETY FIRST — SAFETY — SIGNAL DESIGN

DES: RC
DIG: RC
CHK: JJL
A.F.E. 02810
ID CEN4394.TAX

UNION PACIFIC RAILROAD
CHICAGO, ILLINOIS TO
CLINTON, IOWA
C.T.C. CIRCUITS

OFFICE OF CHIEF ENG'R SIGNALS — OMAHA NEBR.

DATE 05 03 01
SHEET 1A
DWG 43.94
GEN

Note: Program DAX A to provide:
1-foot offset
and 5 sec P.U. Delay

AND gate

OUT
IN IN

Proposal to Reduce susp by of AHS in Clinton

PH
9-1-09

XXX : out

Restore original AND gate for XR

NOTE:
THIS DRAWING WAS DESIGNED FOR A SPECIFIC APPLICATION. IF A MODIFICATION OR REDESIGN OF THIS DRAWING CAUSES ANY MODULES TO CHANGE, THE UNIT'S PART NUMBER MUST BE CHANGED TO CORRESPOND ACCORDINGLY.

NOTE:
EACH TRANSMITTER TO RAIL WIRE FROM TB1 AND TB2 MUST NOT EXCEED THE MAXIMUM LENGTH SPECIFIED IN THE TABLE SHOWN BELOW. THE RECEIVER WIRE LENGTH IS NOT CRITICAL. DOES NOT APPLY TO 6 TABLE WIRE APPLICATION.

TRANSMITTER FREQUENCY (HZ)	MAXIMUM TRANSMIT WIRE LENGTH (FEET)
86	100
114	125
156	150
211	200
285-970	250

= OUT

CTC/JM4

BELVIDERE, ILLINOIS
HWY 47
JENEVA SUBDIVISION
DUPLICATE COPY

UNION PACIFIC RAILROAD
CHICAGO, ILLINOIS TO
CLINTON, IOWA
C.T.C. CIRCUITS

DESIGNED BY: RC
DRAWN BY: RC
CHECKED BY: JJL
DATE: 05-11-01
SHEET: 4
SCALE: 4.3.94
GEN

Note: Program DAXA to provide 1-foot offset and 5 sec P.U. Delay

Restore original (F) to AND gate for XR

AND gate

OUT

IN IN

NOTE:
THIS DRAWING WAS DESIGNED FOR A SPECIFIC APPLICATION. IF A MODIFICATION OR REDESIGN OF THIS DRAWING CAUSES ANY MODULES TO CHANGE, THE UNIT'S PART NUMBER MUST BE CHANGED TO CORRESPOND ACCORDINGLY.

NOTE:
EACH TRANSMITTER TO RAIL WIRE FROM TBI 1 AND TBI 2 MUST NOT EXCEED THE MAXIMUM LENGTH SPECIFIED IN THE TABLE SHOWN BELOW. THE RECEIVER WIRE LENGTH IS NOT CRITICAL. DOES NOT APPLY TO 6 TRACK WIRE APPLICATION.

TRANSMITTER FREQUENCY (HZ)	MAXIMUM TRANSMIT WIRE LENGTH (FEET)
86	100
114	125
156	150
211	200
285 910	250

MICROTRAN

DAX #2 MODULE
DAX #1 MODULE
DATA RECORDER MODULE
PROCESSOR MODULE
RELAY DRIVE MODULE
TRANSCEIVER #2 MODULE
TRANSCEIVER #1 MODULE
ISLAND #2 MODULE
ISLAND #1 MODULE

MICROSTANDBY

TRANSFER MODULE
CONTROL INTERFACE
DAX #2 MODULE
DAX #1 MODULE
DATA RECORDER MODULE
PROCESSOR MODULE
RELAY DRIVE MODULE
TRANSCEIVER #2 MODULE
TRANSCEIVER #1 MODULE
ISLAND #2 MODULE
ISLAND #1 MODULE

= IN
= OUT

CTC JNW
ELGIN, ILLINOIS
HWY 47
GENEVA SUBDIVISION
D.O.T. #15 HWY

REV.	MODIFICATION LEVEL	
	BASELINE LEVEL CHG.	00
	LIMS LEVEL MODIFICATIONS	08
	LABS LEVEL BY DES.CHAR.	03
	CHANGED FROM TYPE 1	Y

UNION PACIFIC

DESIGN: RC
DRN: RC
CHK: JJL
APPD: DRB

UNION PACIFIC RAILROAD
CHICAGO, ILLINOIS TO
CLINTON, IOWA
C.T.C. CIRCUITS

DATE: 05.01.01
SHEET: 5
DWG: 43.94