22

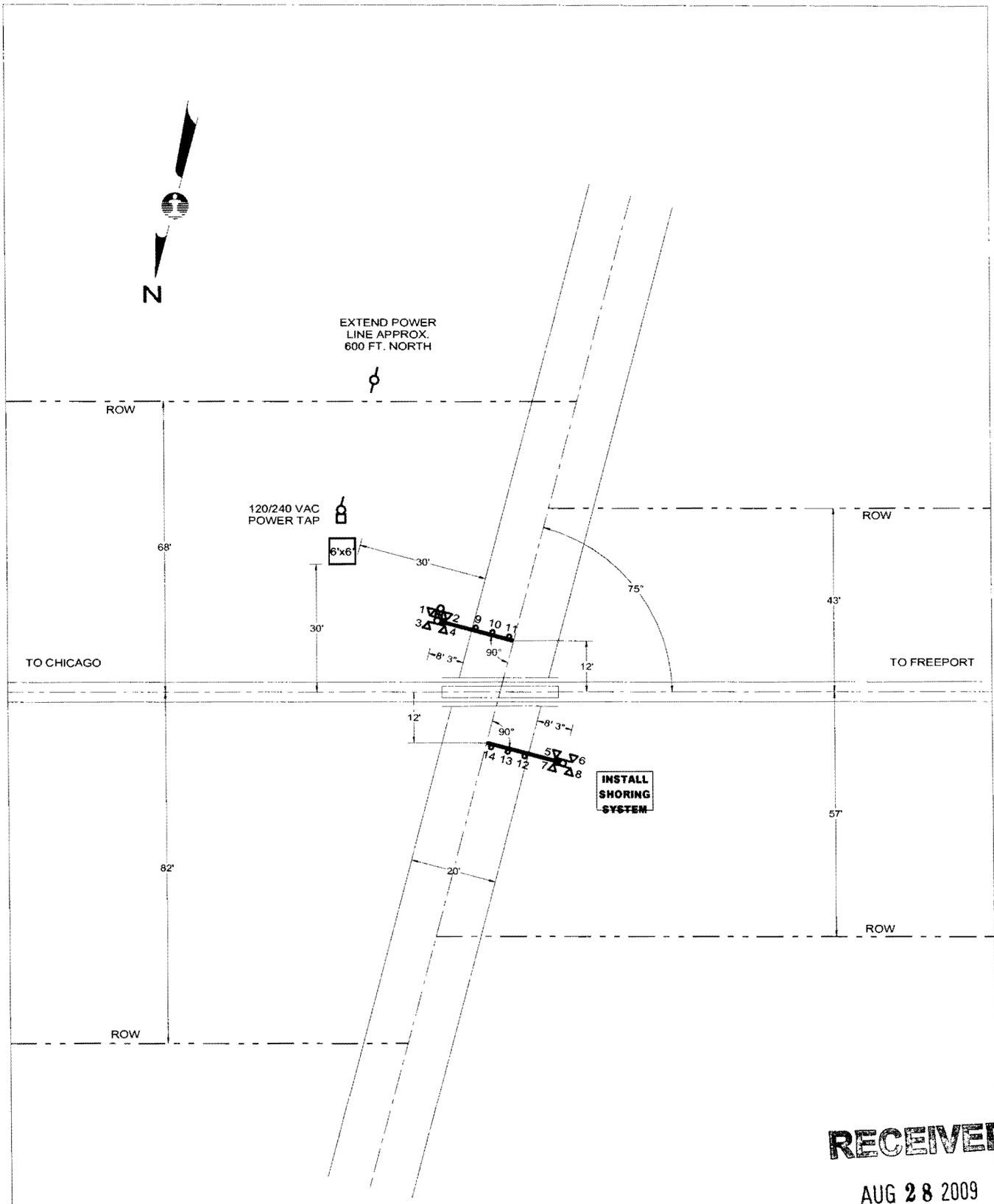

RECEIVED
AUG 28 2009
Illinois Commerce Commission
RAIL SAFETY SECTION

PROPOSED
SEPT 24, 2008

QUADRANT	SE	NW
STANDARD AFLS	LED	LED
CANTILEVER, FT.	-	-
GATE, FT.	18	18
ADDED LIGHTS	-	-
BARRICADE	-	-
MULTI-TK SIGN	-	-
BELL	X	-
REVISIONS		

E:\DWG\FRE\09260X.CAD

CN

SIGNALS & COMMUNICATIONS, ENGINEERING DEPARTMENT

CITY & STATE: ALWORTH, IL	SD 1015 X
CROSSING: FALCONER ROAD	DATE: SEPT 24, 2008
CCP - 92.60-W	DOT - 290 095H
MIDWEST DIVISION	FREEPORT SUBDIVISION

IN SERVICE	SCALE	DRAWN BY
	1"=30'	AVS

SD 1015 - MP 91 TO 92

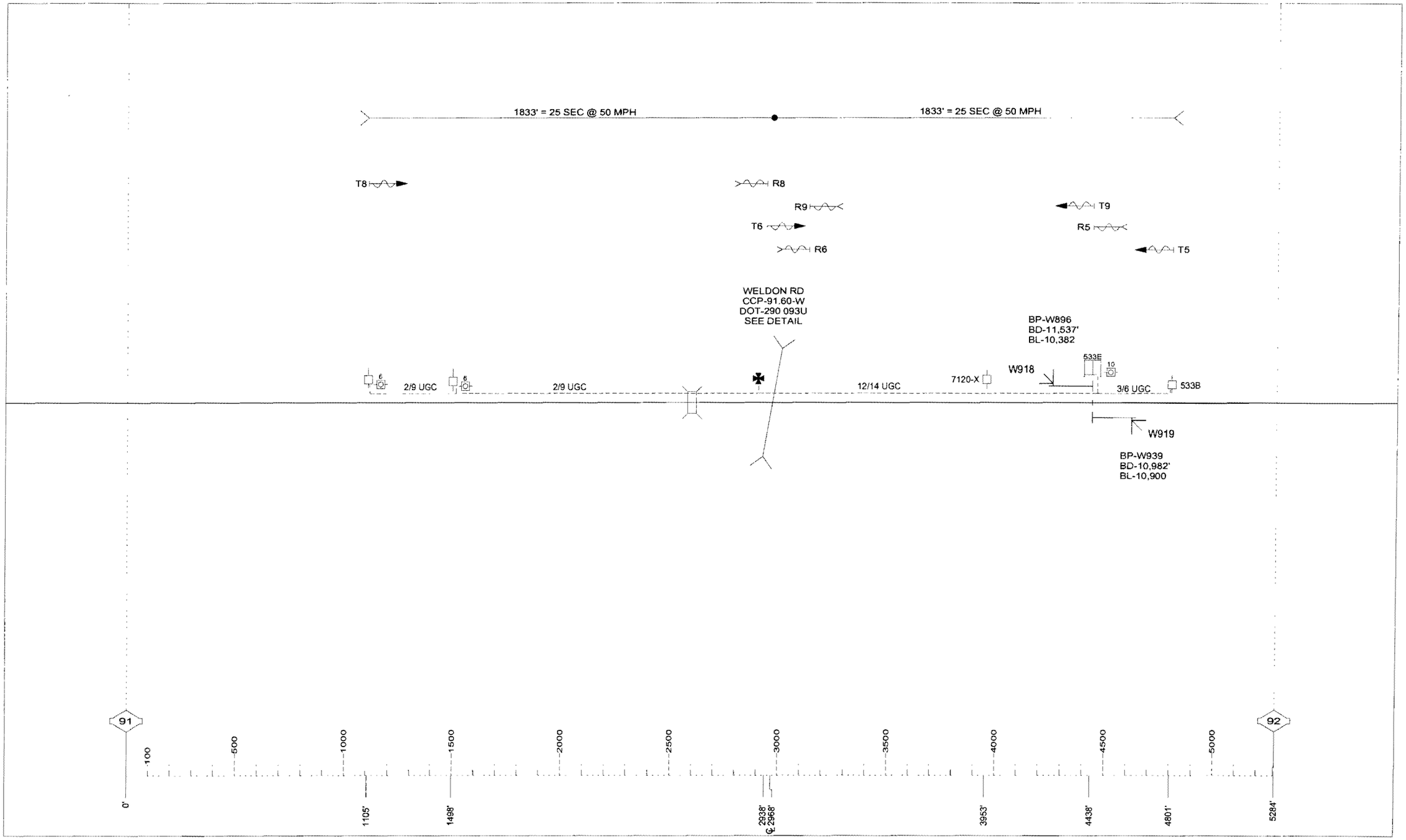

DRAWING SCALE 1" = 500'

2-14-00

SD 1015 - MP 92 TO 93

FALCONER ROAD

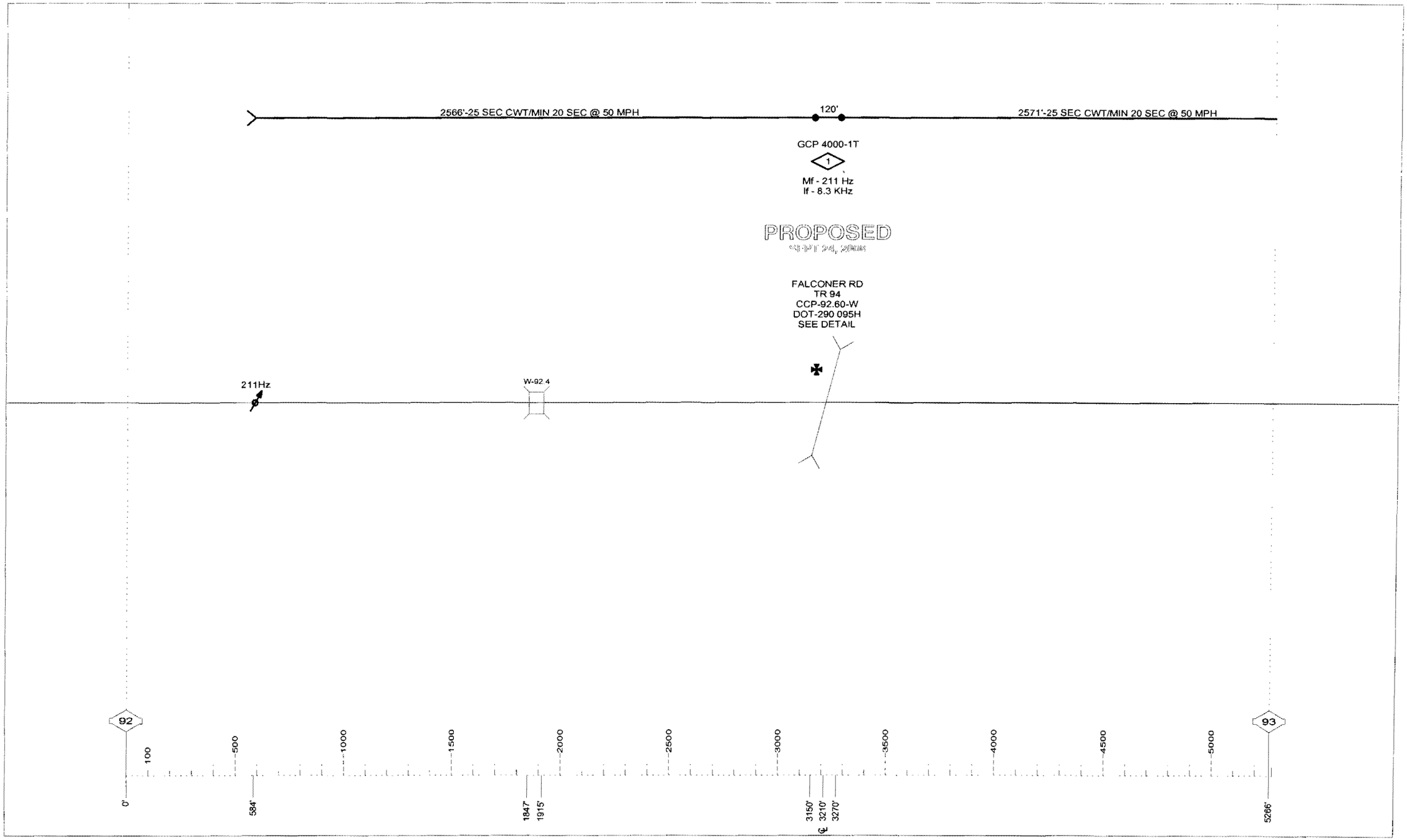

DRAWING SCALE 1" = 500'

2-14-00

SD 1015 - MP 93 TO 94

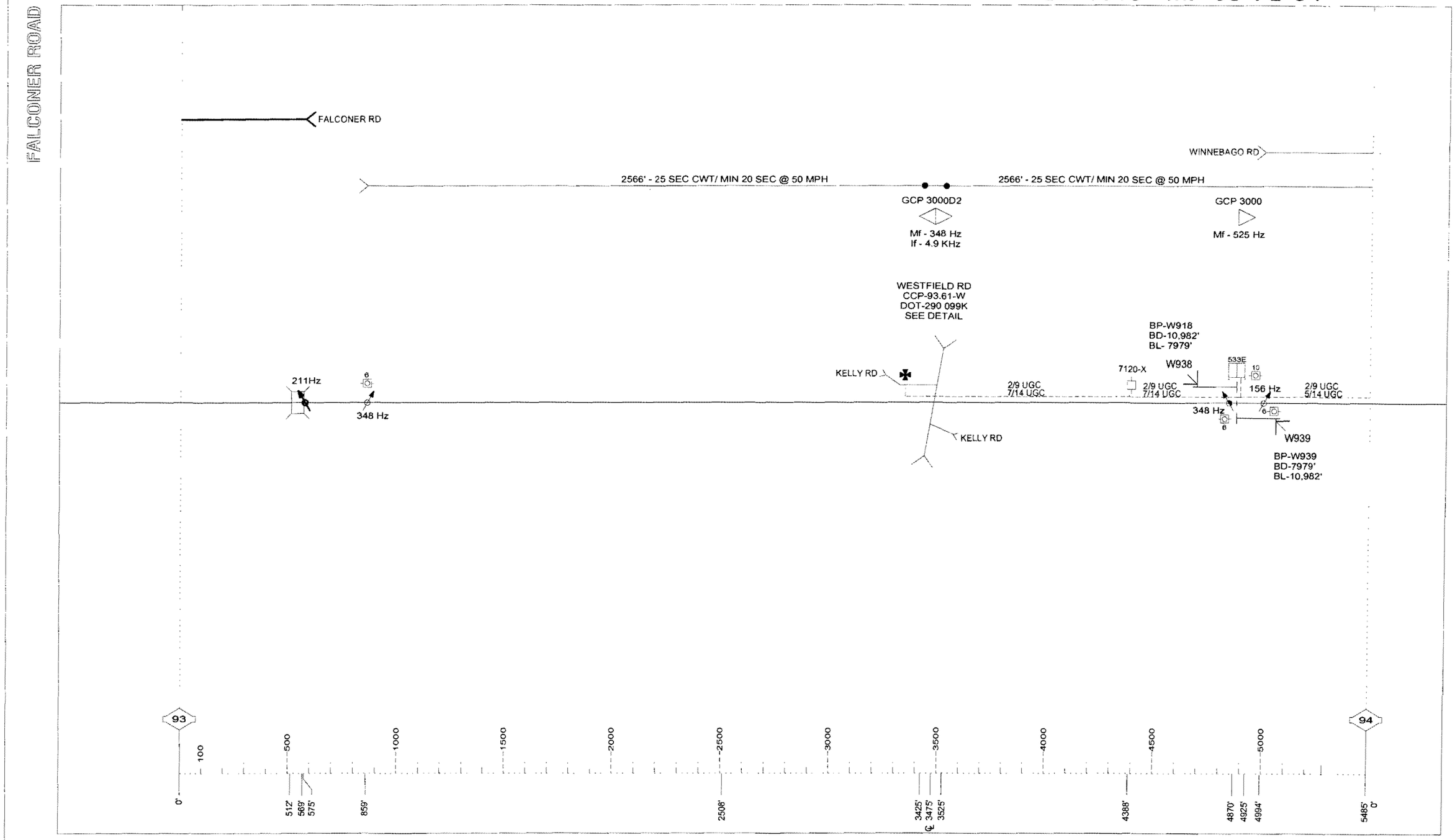

DRAWING SCALE 1" = 500'

2-14-00

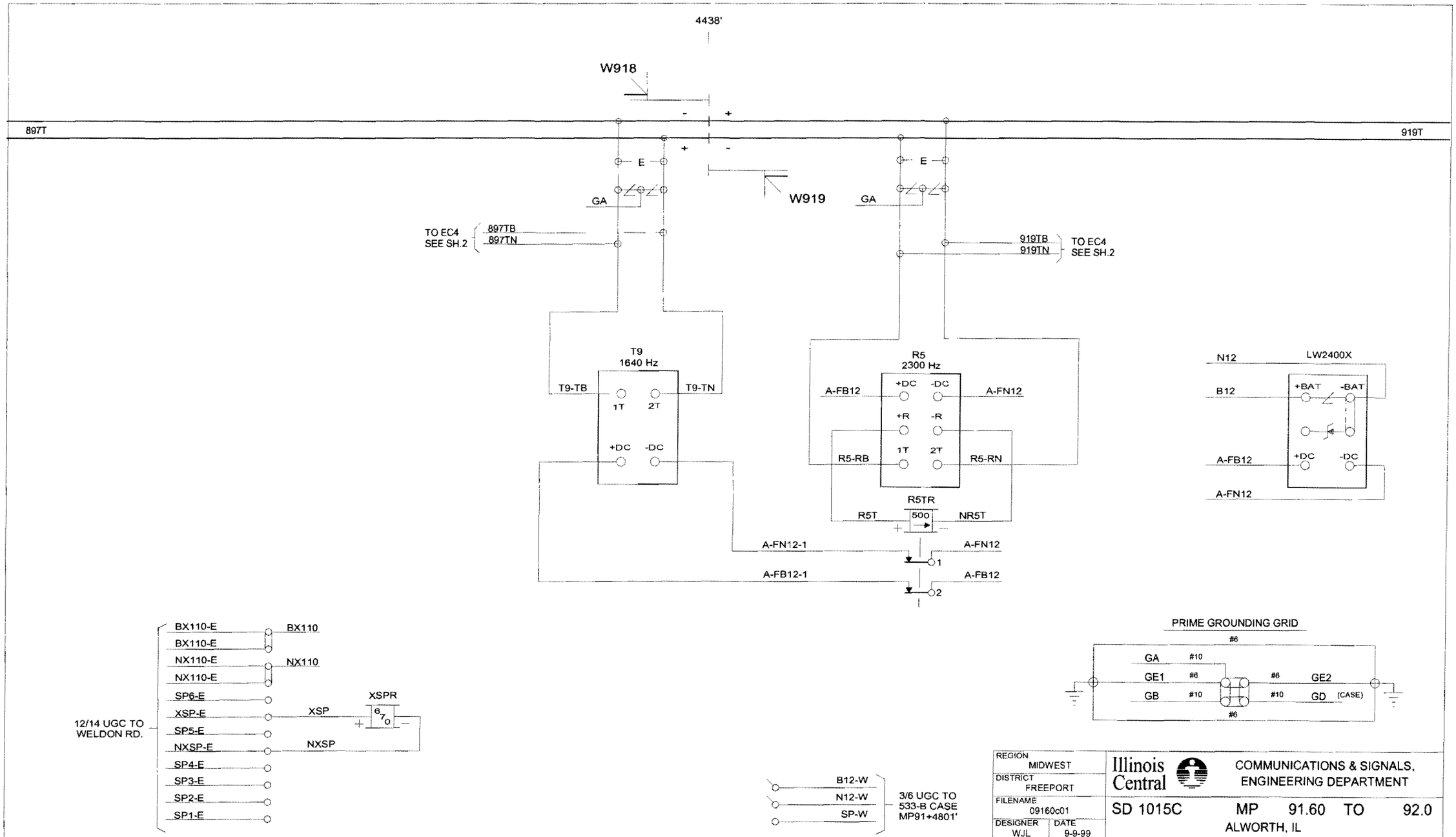

REGION	MIDWEST
DISTRICT	FREEPORT
FILENAME	09160c01
DESIGNER	WJL
DATE	9-9-99
SHEET NO.	1 OF 2

Illinois Central

COMMUNICATIONS & SIGNALS,
ENGINEERING DEPARTMENT

SD 1015C MP 91.60 TO 92.0

ALWORTH, IL

EC4

SIGS W918 & W919

5	4	3	2	2-14-00	1	REVISIONS

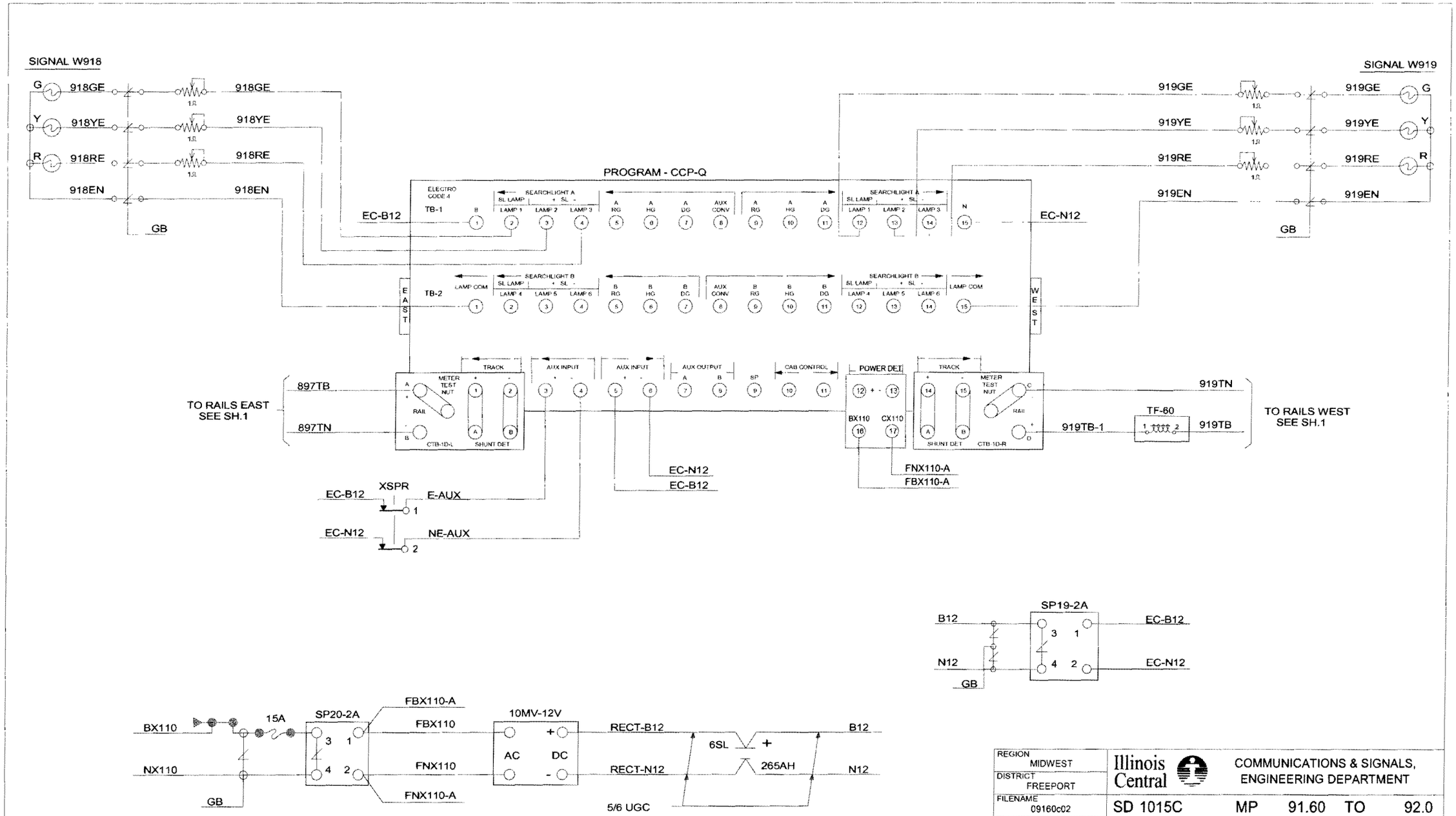

REGION MIDWEST	Illinois Central — COMMUNICATIONS & SIGNALS, ENGINEERING DEPARTMENT
DISTRICT FREEPORT	
FILENAME 09160c02	SD 1015C MP 91.60 TO 92.0
DESIGNER WJL / DATE 9-9-99	ALWORTH, IL
SHEET NO. 2 OF 2	EC4 SIGS W918 & W919 POWER

5 4 3 2 2-14-00 1 REVISIONS

WATERMARK

FRE-092.60-01.dgn
24-AUG-2009

NO.	DATE	BY	DESCRIPTION	APP. BY
1				
2				
3				
4				
5				

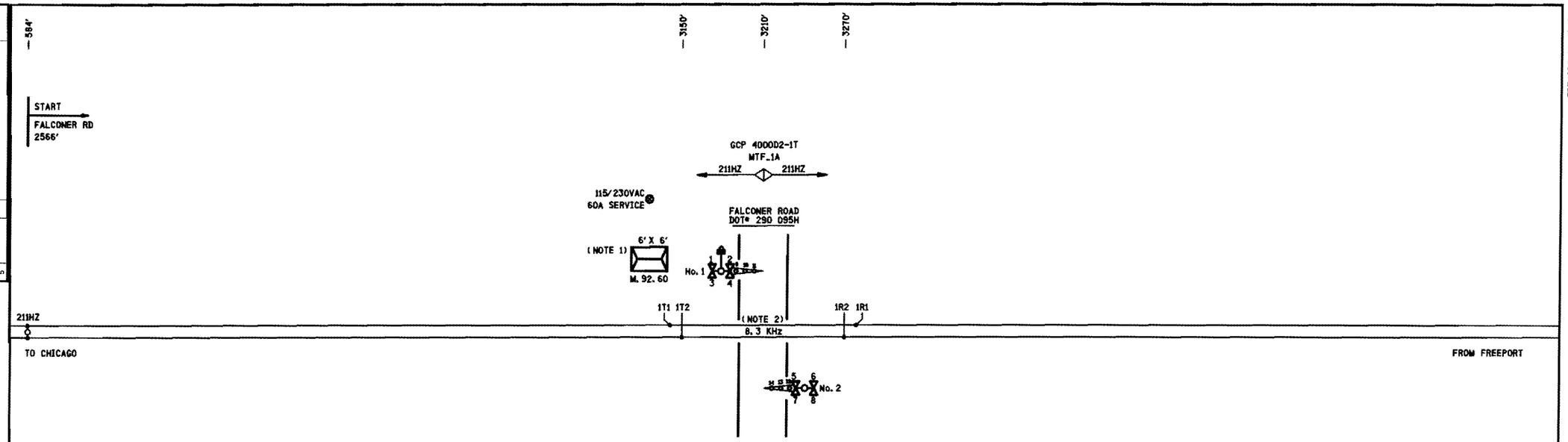

PROPOSED
DES. No. _____
RED-IN YELLOW-OUT
AS INSTALLED
DATE _____
BY _____

NOTES:
1) BUNGALOW TO BE INSTALLED WITH DOORS FACING TRACK.
2) ISLAND DISTANCE MINIMUM 120 FEET
DENOTES MULTI-FREQ. NARROW BAND SHUNT 62775-1543.

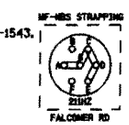

6' X 6' BUNGALOW

PROPOSED D	M	Y	REVISIONS	D	C	COMPLETED D	M	Y	C

REGION SOUTHERN
SUB. FREEPORT 382
CN
SIGNALS AND COMMUNICATIONS HOMEWOOD
DES. APL
31 JULY 2009
CH. MKN
TRACK LAYOUT
FALCONER ROAD
ALWORTH, IL
FRE-092.60-01
15

SAFETRAN SYSTEM CORP.
LOUISVILLE DIVISION, LOUISVILLE, KY

SAFETRAN SYSTEMS CORPORATION

DES. : APL	DATE: 07/31/09	JOB NO. : PTCA10191
CKD. : MKN	ISSUE DATE:	EST. NO. :
DRN. : APL	PLAN NO. :	SHEET 1 OF 15
P. TIME: (14:15)	P. DATE: 24-AUG-2009	CAD ID. : FRE-092.60-01

WATERMARK

FRE-092.60-02.dgn
24-AUG-2009

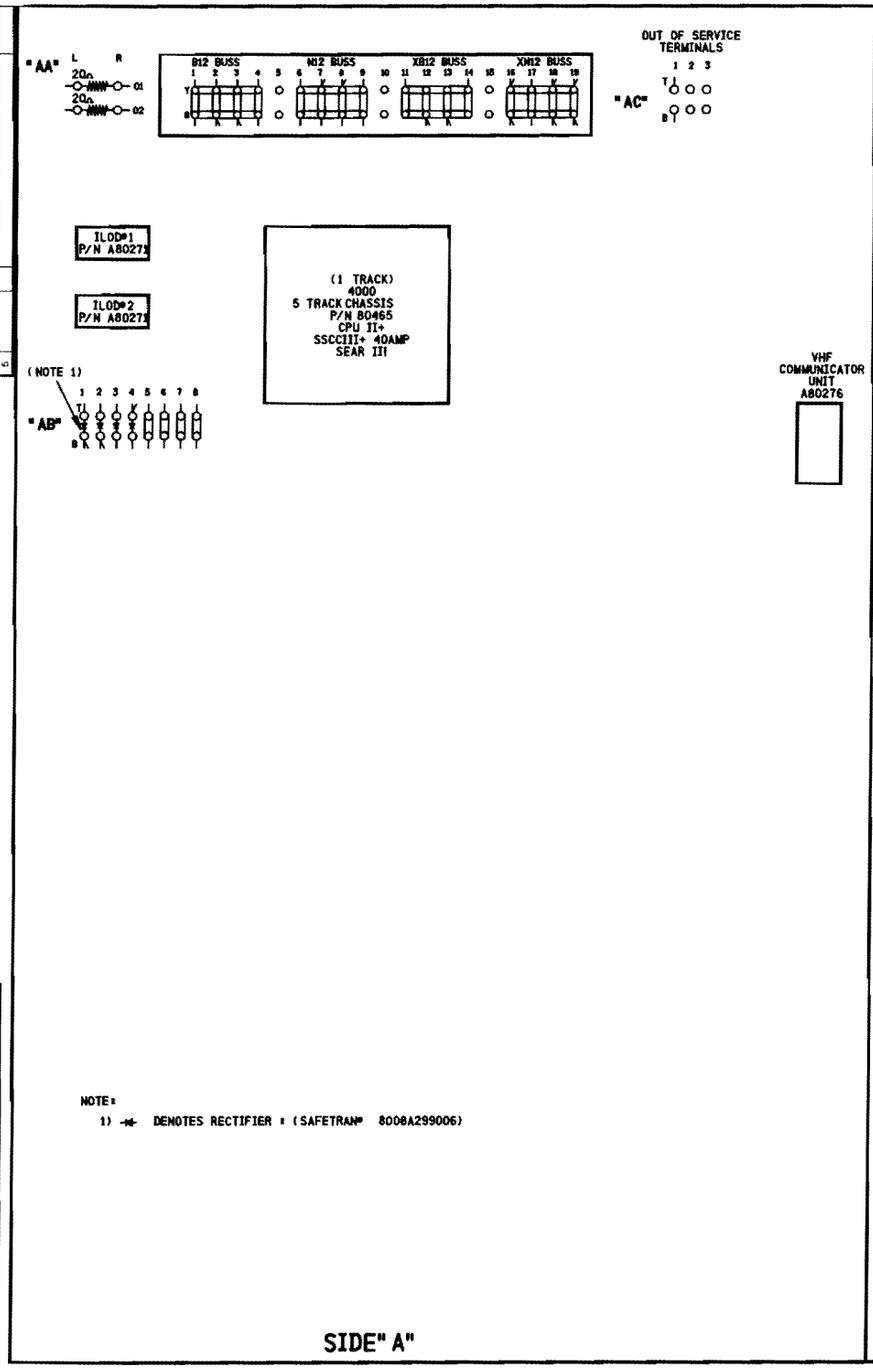

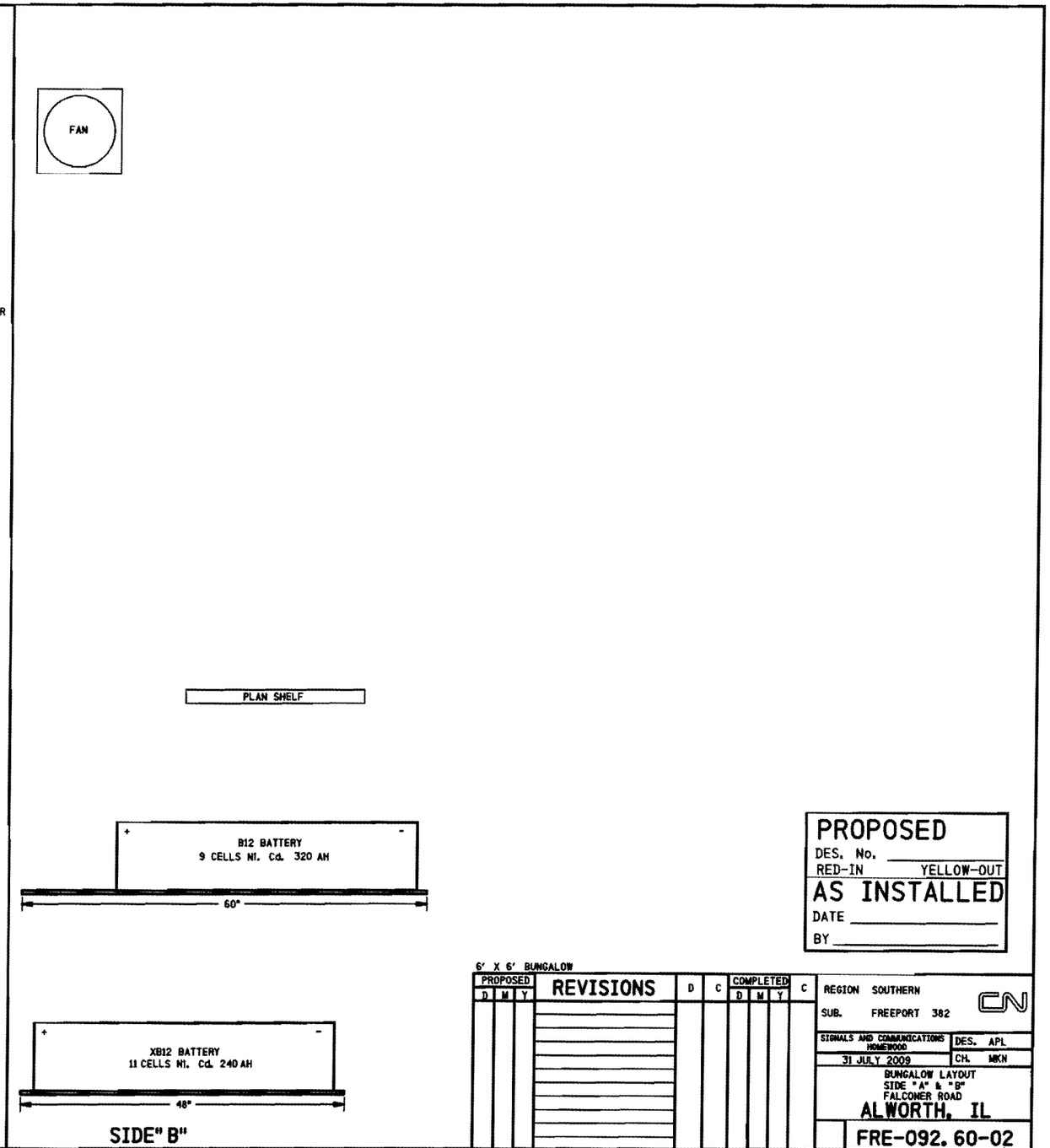

NO.	DATE	BY	DESCRIPTION	APP. BY
1				
2				
3				
4				
5				

REVISIONS

SAFETRAN SYSTEMS CORPORATION

DES. : APL	DATE: 07/31/09	JOB NO. : PICA10191	
CKD. : MKN	ISSUE DATE:	EST. NO. :	
DRN. : APL	PLAN NO. :	SHEET 2 OF 15	
P TIME: (14:5)	P DATE: 24-AUG-2009	CAD ID. : FRE-092.60-02	

PROPOSED
DES. No. _____
RED-IN YELLOW-OUT
AS INSTALLED
DATE _____
BY _____

6' X 6' BUNGALOW

PROPOSED D	M	Y	REVISIONS	D	C	COMPLETED D	M	Y	C

REGION SOUTHERN
SUB. FREEPORT 382

SIGNALS AND COMMUNICATIONS HOMEWOOD
31 JULY 2009

DES. APL
CH. MKN

BUNGALOW LAYOUT
SIDE "A" & "B"
FALCONER ROAD
ALWORTH, IL

FRE-092.60-02

SAFETRAN SYSTEM CORP.
LOUISVILLE DIVISION, LOUISVILLE, KY

WATERMARK

NO.	DATE	BY	DESCRIPTION	APP. BY
1				
2				
3				
4				
5				

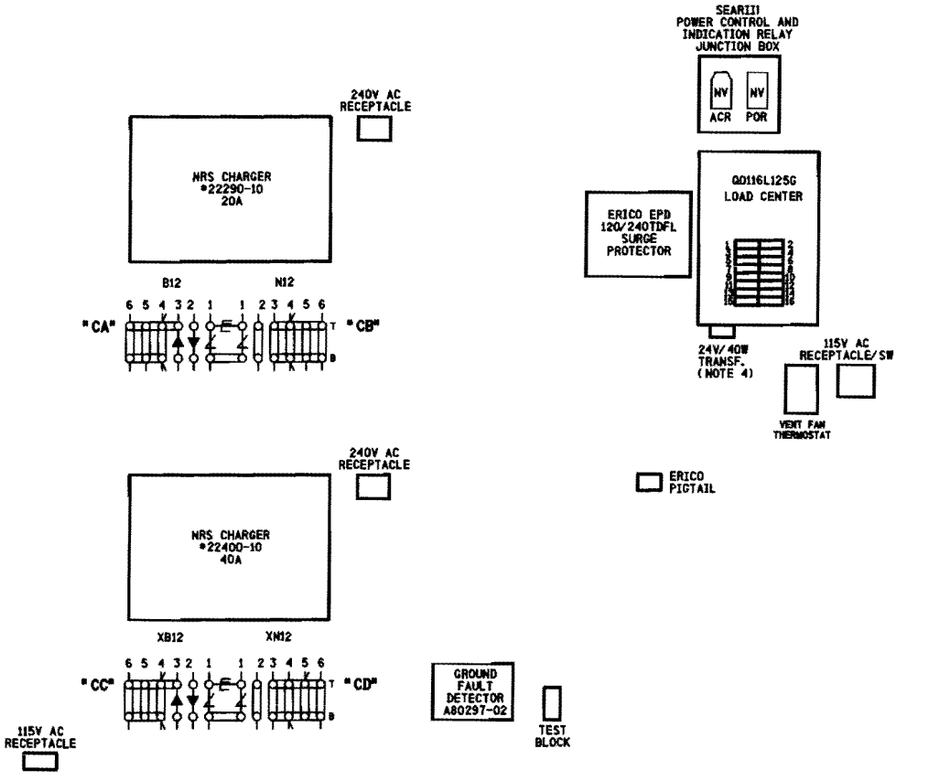

NOTES:

1) DENOTES EQUALIZER TYPE: (SAFETRAN #022700-1X)
2) DENOTES LIGHTNING ARRESTER TYPE: (SAFETRAN #022585-1X)
3) SURGE PROTECTION SHOULD BE BONDED TO BUNGALOW.
4) 24V-40W TRANSFORMER (CN STOCK #02-45-367)

SIDE "C"

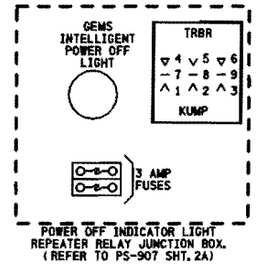

SIDE "D"
ABOVE ENTRY DOOR

FRE-092.60-03.dgn
24-AUG-2009

PROPOSED
DES. No. _____
RED-IN YELLOW-OUT
AS INSTALLED
DATE _____
BY _____

6' X 6' BUNGALOW

PROPOSED D	M	Y	REVISIONS	D	C	COMPLETED D	M	Y	C

REGION SOUTHERN
SUB. FREEPORT 382
CN

SIGNALS AND COMMUNICATIONS HOMEWOOD — DES. APL
31 JULY 2009 — CH. MKN

BUNGALOW LAYOUT
SIDE "C" & OVER DOOR SIDE "D"
FALCONER ROAD
ALWORTH, IL

FRE-092.60-03

SAFETRAN SYSTEM CORP.
LOUISVILLE DIVISION, LOUISVILLE, KY

SAFETRAN SYSTEMS CORPORATION

DES.: APL	DATE: 07/31/09	JOB NO.: P:CA10191	
CKD.: MKN	ISSUE DATE:	EST. NO.:	
DRN.: APL	PLAN NO.:	SHEET 3 OF 15	
P. TIME: 14:45	P DATE: 24-AUG-2009	CAD ID.: FRE-092.60-03	

WATERMARK

FRE-092.60-04.dgn
24-AUG-2009

NO.	DATE	BY	REVISIONS DESCRIPTION	APP. BY
1				
2				
3				
4				
5				

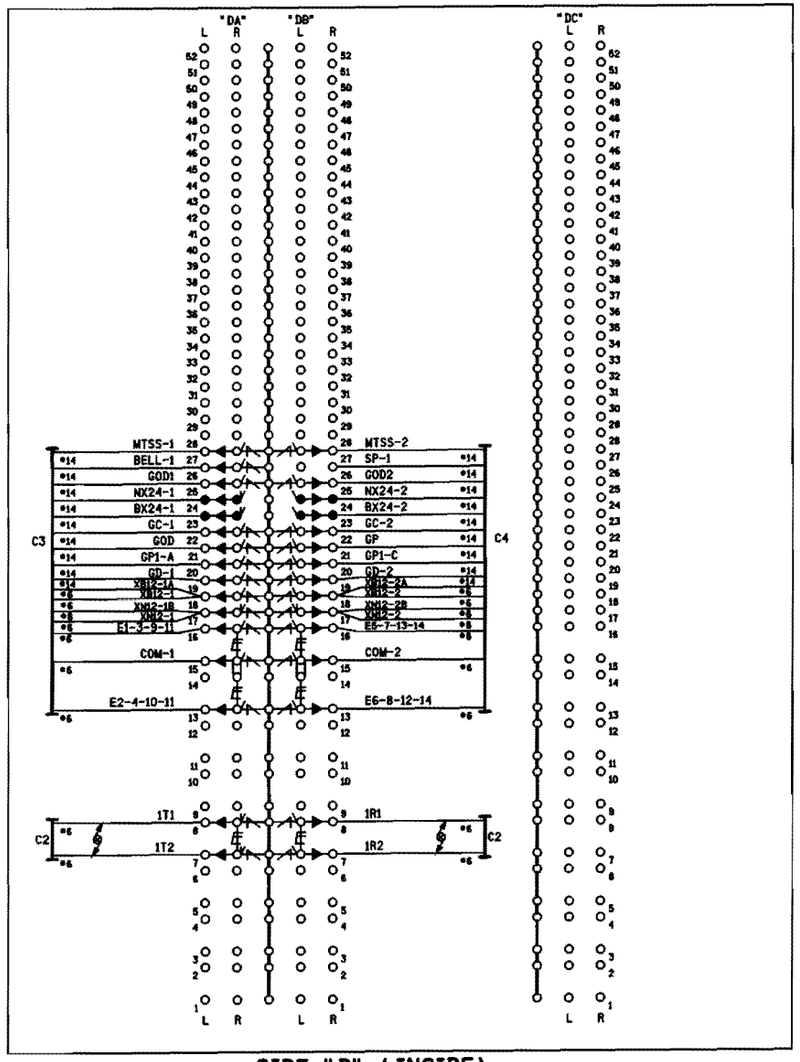

SIDE "D" (INSIDE)

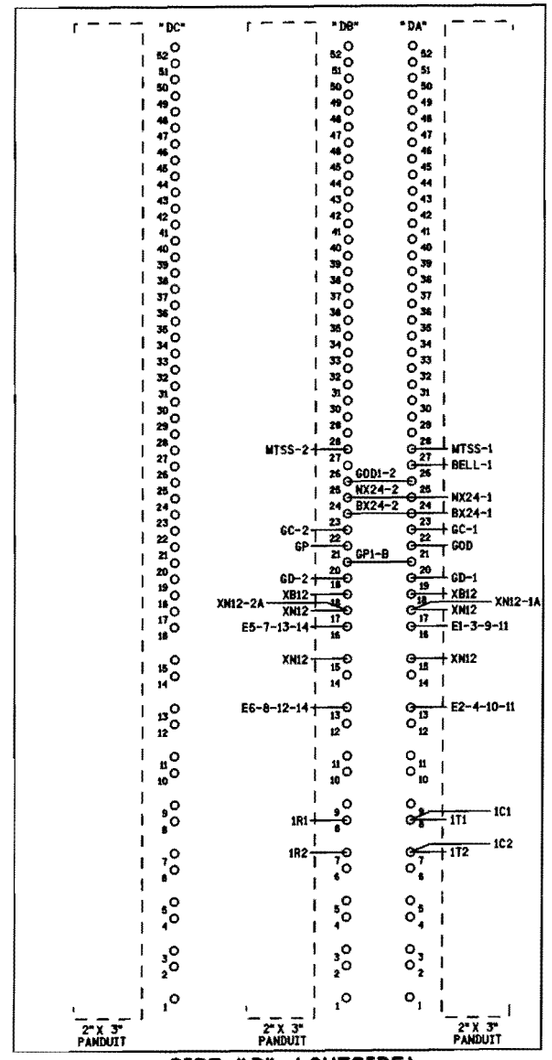

SIDE "D" (OUTSIDE)

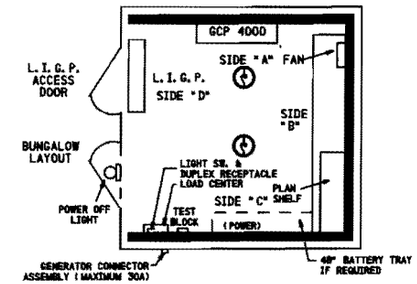

ROOF MOUNTED AC/HEATING UNIT

CABLE CONSIST:

C1-3C#6 TECK 90 U/G TO MAIN SERVICE
C2-(2)-2SC#6 TW. TO TRACK
C3-16C (7#6, 9#14) TO GATE (SIG.#1)
C4-16C (7#6, 9#14) TO GATE (SIG.#2)

NOTES:

1) DENOTES LIGHTNING ARRESTER TYPE:(SAFETRAN #022585-1X)
2) DENOTES EQUALIZER TYPE:(SAFETRAN #022700-1X)
3) DENOTES TWISTED PAIR.
4) ENSURE DOUBLE NUTTING OF ALL TERMINALS.
5) ● DENOTES INSULATED TERMINAL

PROPOSED
DES. No. _____
RED-IN YELLOW-OUT
AS INSTALLED
DATE _____
BY _____

6' X 6' BUNGALOW

PROPOSED D	M	Y	REVISIONS	D	C	COMPLETED D	M	Y	C

REGION SOUTHERN
SUB. FREEPORT 382
CN

SIGNALS AND COMMUNICATIONS HOMEWOOD
31 JULY 2009
DES. APL
CH. MKN

BUNGALOW LAYOUT SIDE "D"
LOW IMPEDANCE GROUND PLANE
FALCONER ROAD
ALWORTH, IL

FRE-092.60-04

SAFETRAN SYSTEM CORP.
LOUISVILLE DIVISION, LOUISVILLE, KY

SAFETRAN SYSTEMS CORPORATION

DES.: APL	DATE: 07/31/09	JOB NO.: PICA(D19)	
CAD.: MKN	ISSUE DATE:	EST. NO.:	
DWN.: APL	PLAN NO.:	SHEET 4 OF 15	
P. TIME: 14:51	P. DATE: 24-AUG-2009	CAD ID.: FRE-092.60-04	

WATERMARK

FRE-092.60-05.dgn
24-AUG-2009

REVISIONS				
NO.	DATE	BY	DESCRIPTION	APP. BY
1				
2				
3				
4				
5				

NOTES:

1) DISABLE THE DISPLAY HEATER BY REMOVING JUMPER J-22 (LOCATED AT THE EDGE OF THE DISPLAY MODULE CARD THAT PLUGS INTO THE CHASSIS).

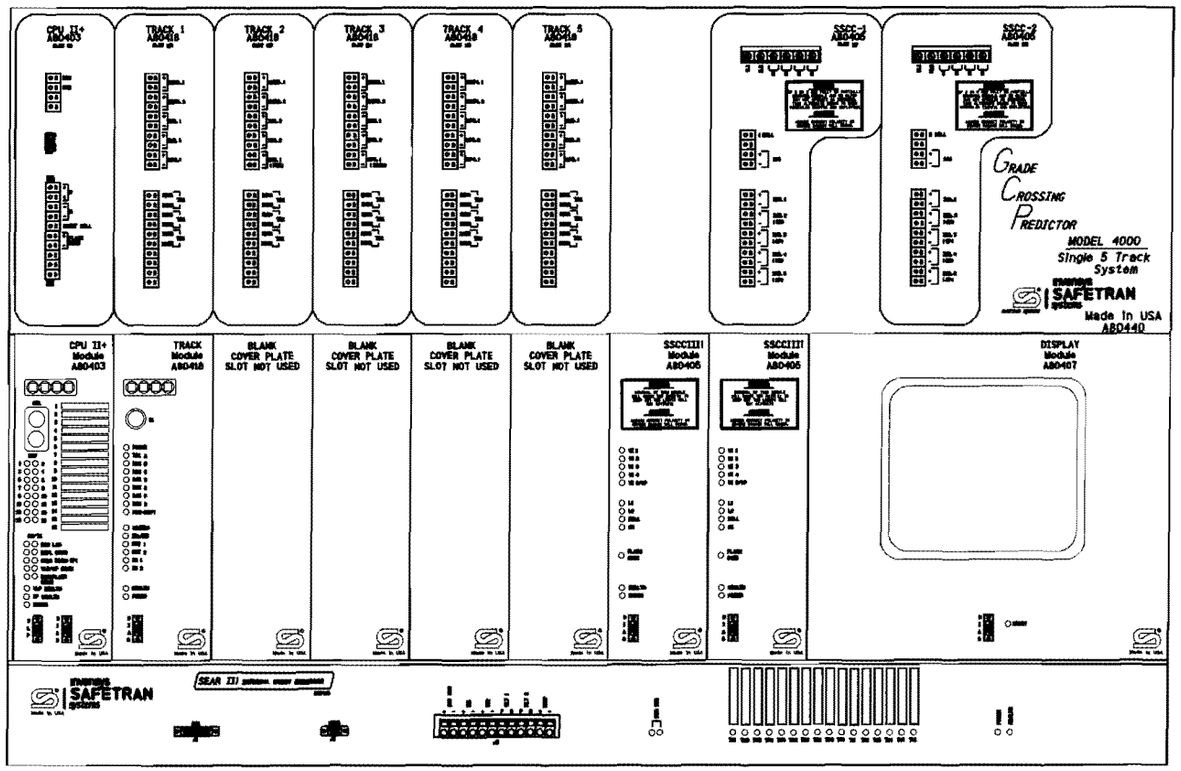

ATTENTION!

ENSURE THE DISPLAY MODULE HEATER IS DISABLED. LEAVING THE DISPLAY HEATER ENABLE WILL REDUCE THE AMOUNT OF BATTERY STANDBY TIME IN THE EVENT OF AN AC POWER FAILURE.

HEATER FUNCTION IS
JUMPER SELECTABLE ON
THE DISPLAY MODULE BOARD.
THREE OPTIONS ARE AVAILABLE.
NORMAL LCD HTR (DEFAULT)
HI CURRENT
NO JUMPER (HEATER DISABLED)

PROPOSED
DES. No. _____
RED-IN YELLOW-OUT

AS INSTALLED
DATE _____
BY _____

6' X 6' BUNGALOW

PROPOSED D	M	Y	REVISIONS	D	C	COMPLETED D	M	Y	C

REGION SOUTHERN
SUB. FREEPORT 382
CN

SIGNALS AND COMMUNICATIONS HONEWOOD
31 JULY 2009
DES. APL
CH. MKN

GCP 4000 REDUNDANT
5 TRACK TRK CHASSIS & MODULE LAYOUT
FALCONER ROAD
ALWORTH, IL

FRE-092.60-05

SAFETRAN SYSTEM CORP.
LOUISVILLE DIVISION, LOUISVILLE, KY

SAFETRAN SYSTEMS CORPORATION

DES.: APL	DATE: 07/31/09	JOB NO.: PTCA1019	
CKD.: MKN	ISSUE DATE:	EST. NO.:	
DRN.: APL	PLAN NO.:	SHEET 5 OF 15	
P TIME:(14:5)	P DATE: 24-AUG-2009	CAD ID.: FRE-092.60-05	

WATERMARK

FRE-092.60-06.dgn
24-AUG-2009

NO.	DATE	BY	DESCRIPTION	APP. BY
1				
2				
3				
4				
5				

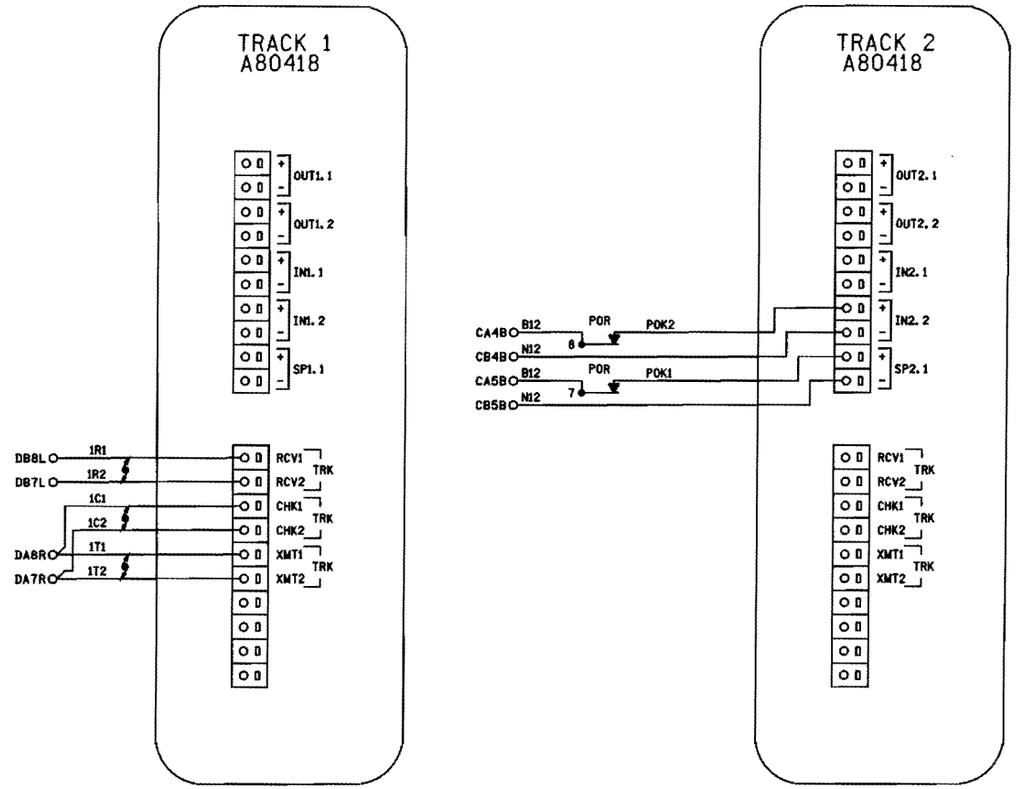

NOTES:

1) ALL WIRING #16 AWG UNLESS OTHERWISE NOTED.

2) DENOTES TWISTED PAIR.

PROPOSED
DES. No. _____
RED-IN YELLOW-OUT
AS INSTALLED
DATE _____
BY _____

6' X 6' BUNGALOW

PROPOSED D	M	Y	REVISIONS	D	C	COMPLETED D	M	Y	C

REGION SOUTHERN
SUB. FREEPORT 382

SIGNALS AND COMMUNICATIONS HOMEWOOD
31 JULY 2009
DES. APL
CHL MKN

GCP 4000

FALCONER ROAD
ALWORTH, IL

FRE-092.60-06

SAFETRAN SYSTEM CORP.
LOUISVILLE DIVISION, LOUISVILLE, KY

SAFETRAN SYSTEMS CORPORATION

DES.: APL	DATE: 07/31/09	JOB NO.: PICA10191	
CKD.: MKN	ISSUE DATE:	EST. NO.:	
DRN.: APL	PLAN NO.:	SHEET 6 OF 15	
P TIME: 14:51	P DATE: 24-AUG-2009	CAD ID.: FRE-092.60-06	

WATERMARK

FRE-092.60-07.dgn
24-AUG-2009

NO.	DATE	BY	DESCRIPTION	APP. BY
1				
2				
3				
4				
5				

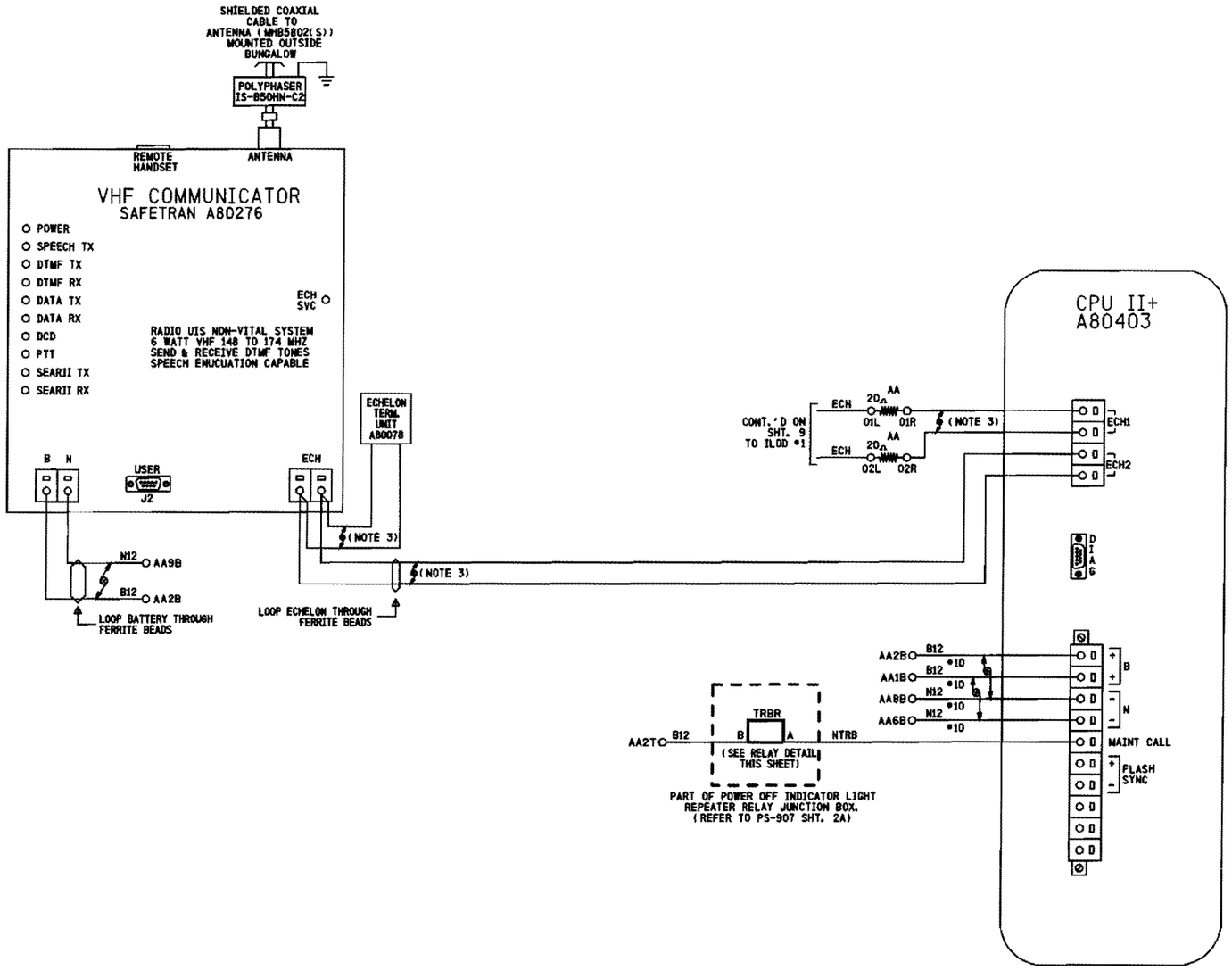

RELAY DETAIL

RELAY - POTTER & BRUMFIELD
MODEL KUMP-14D18-12 SOCKET MOUNTABLE
12 VDC W/ 3 FORM C CONTACTS.

SOCKET - SCREW TERMINAL
MODEL 27E121.

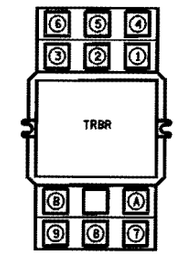

LOCATED OVER ENTRY DOOR

RELAY WIRING DIAGRAM (REAR VIEW)

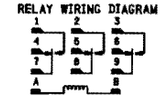

NOTE:
SOCKET NUMBERING CORRESPONDS DIRECTLY WITH RELAY NUMBERING. (COIL SHOWN ENERGIZED)

NOTES:
1) ALL WIRING #16 AWG UNLESS OTHERWISE NOTED.
2) DENOTES TWISTED PAIR.
3) USE BELDEN CABLE, PART #8461-u500-60 FOR ALL ECHELON AND LAN WIRING.

PROPOSED
DES. No. _____
RED-IN YELLOW-OUT
AS INSTALLED
DATE _____
BY _____

6' X 6' BUNGALOW

PROPOSED D	M	Y	REVISIONS	D	C	COMPLETED D	M	Y	C

REGION SOUTHERN
SUB. FREEPORT 382
CN

SIGNALS AND COMMUNICATIONS HOMEWOOD
31 JULY 2009
DES. APL
CH. MKN

GCP 4000
CPUII+ & VHF COMMUNICATOR
FALCONER ROAD
ALWORTH, IL

FRE-092.60-07

SAFETRAN SYSTEM CORP.
LOUISVILLE DIVISION, LOUISVILLE, KY

SAFETRAN SYSTEMS CORPORATION

DES.: APL	DATE: 07/31/09	JOB NO.: PICA10191	
CKD.: MKN	ISSUE DATE:	EST. NO.:	
DRN.: APL	PLAN NO.:	SHEET 7 OF 15	
P TIME: (415)	P DATE: 24-AUG-2009	CAD ID.: FRE-092.60-07	

WATERMARK

FRE-092.60-08.dgn
24-AUG-2009

REVISIONS				
NO.	DATE	BY	DESCRIPTION	APP. BY
1				
2				
3				
4				
5				

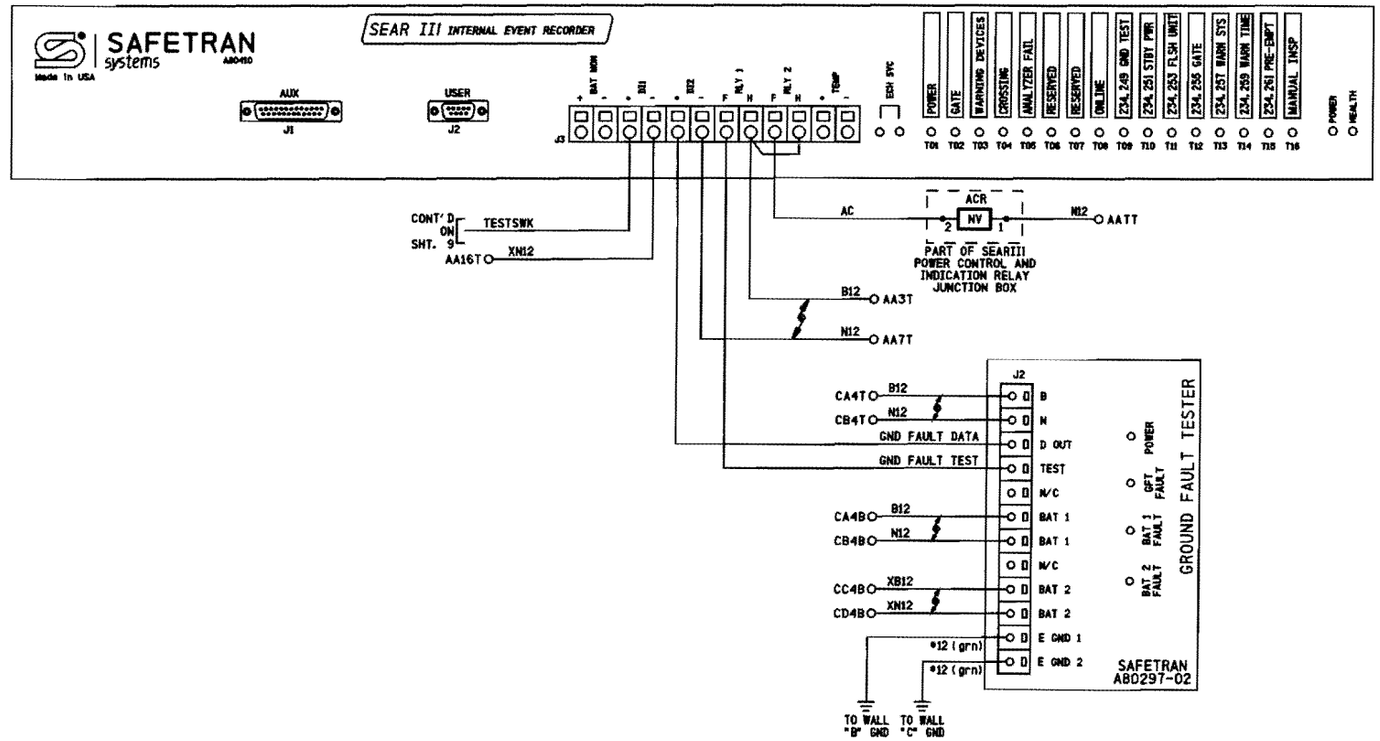

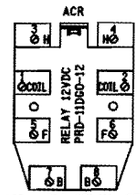

ACR - P&B RELAY, 2FB
(WITH TWO 30A CONTACTS @ 240VAC)
RELAY PART #PRD-11DGO-12

NOTES:
1) ALL WIRING #16 AWG UNLESS OTHERWISE NOTED.
2) DENOTES TWISTED PAIR.

PROPOSED
DES. No. _____
RED-IN YELLOW-OUT
AS INSTALLED
DATE _____
BY _____

6' X 6' BUNGALOW

PROPOSED D	M	Y	REVISIONS	D	C	COMPLETED D	M	Y	C

REGION SOUTHERN
SUB. FREEPORT 382
CN

SIGNALS AND COMMUNICATIONS - HOMEWOOD	DES. APL
31 JULY 2009	CH. MKN

GCP 4000/SEAR III
INTERNAL EVENT ANALYZER WITH GFT
FALCONER ROAD
ALWORTH, IL

FRE-092.60-08

SAFETRAN SYSTEM CORP.
LOUISVILLE DIVISION, LOUISVILLE, KY

SAFETRAN SYSTEMS CORPORATION

DES. : APL	DATE: 07/31/09	JOB NO. : PTCA10196	
CKD. : MKN	ISSUE DATE:	EST. NO. :	
DRN. : APL	PLAN NO. :	SHEET 8 OF 15	
P TIME: 14:51	P DATE: 24-AUG-2009	CAD ID. : FRE-092.60-08	

WATERMARK

FRE-092.60-09.dgn
24-AUG-2009

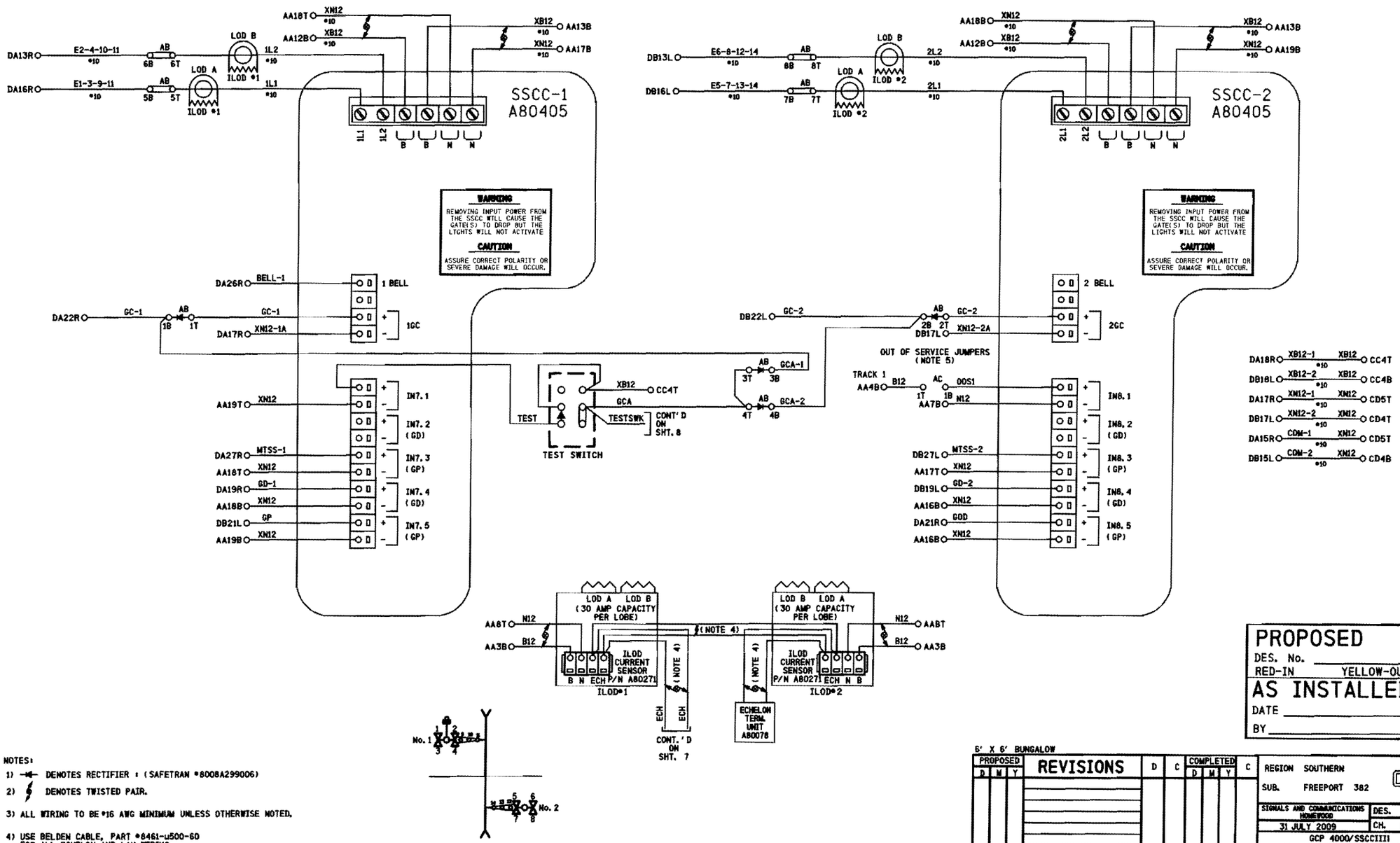

NOTES:

1) DENOTES RECTIFIER : (SAFETRAN #8008A299006)

2) DENOTES TWISTED PAIR.

3) ALL WIRING TO BE #16 AWG MINIMUM UNLESS OTHERWISE NOTED.

4) USE BELDEN CABLE, PART #8461-u500-60 FOR ALL ECHELON AND LAN WIRING.

5) TO TAKE TRACK 1 (T1) OUT OF SERVICE, JUMPER AC1T TO AC1B

PROPOSED
DES. No. _____
RED-IN YELLOW-OUT
AS INSTALLED
DATE _____
BY _____

6' X 6' BUNGALOW

PROPOSED D	M	Y	REVISIONS	D	C	COMPLETED D	M	Y	C

REGION SOUTHERN
SUB. FREEPORT 382

SIGNALS AND COMMUNICATIONS HOMEWOOD
31 JULY 2009

DES. APL
CH. MKN

GCP 4000/SSCCIIII
2-20 AMP CONTROLLERS W/ 2 ILODS
FALCONER ROAD
ALWORTH, IL

FRE-092.60-09

SAFETRAN SYSTEM CORP.
LOUISVILLE DIVISION, LOUISVILLE, KY

SAFETRAN SYSTEMS CORPORATION

DES. : APL	DATE: 07/31/09	JOB NO. : PICA10191
CKD. : MKN	ISSUE DATE:	EST. NO. :
DRN. : APL	PLAN NO. :	SHEET 9 OF 15
P TIME: 14:51	P DATE: 24-AUG-2009	CAD ID. : FRE-092.60-09

NO.	DATE	BY	DESCRIPTION	APP. BY
1				
2				
3				
4				
5				

WATERMARK

FRE-092. 60-10. dgn
24-AUG-2009

NO.	DATE	BY	DESCRIPTION	APP. BY
1				
2				
3				
4				
5				

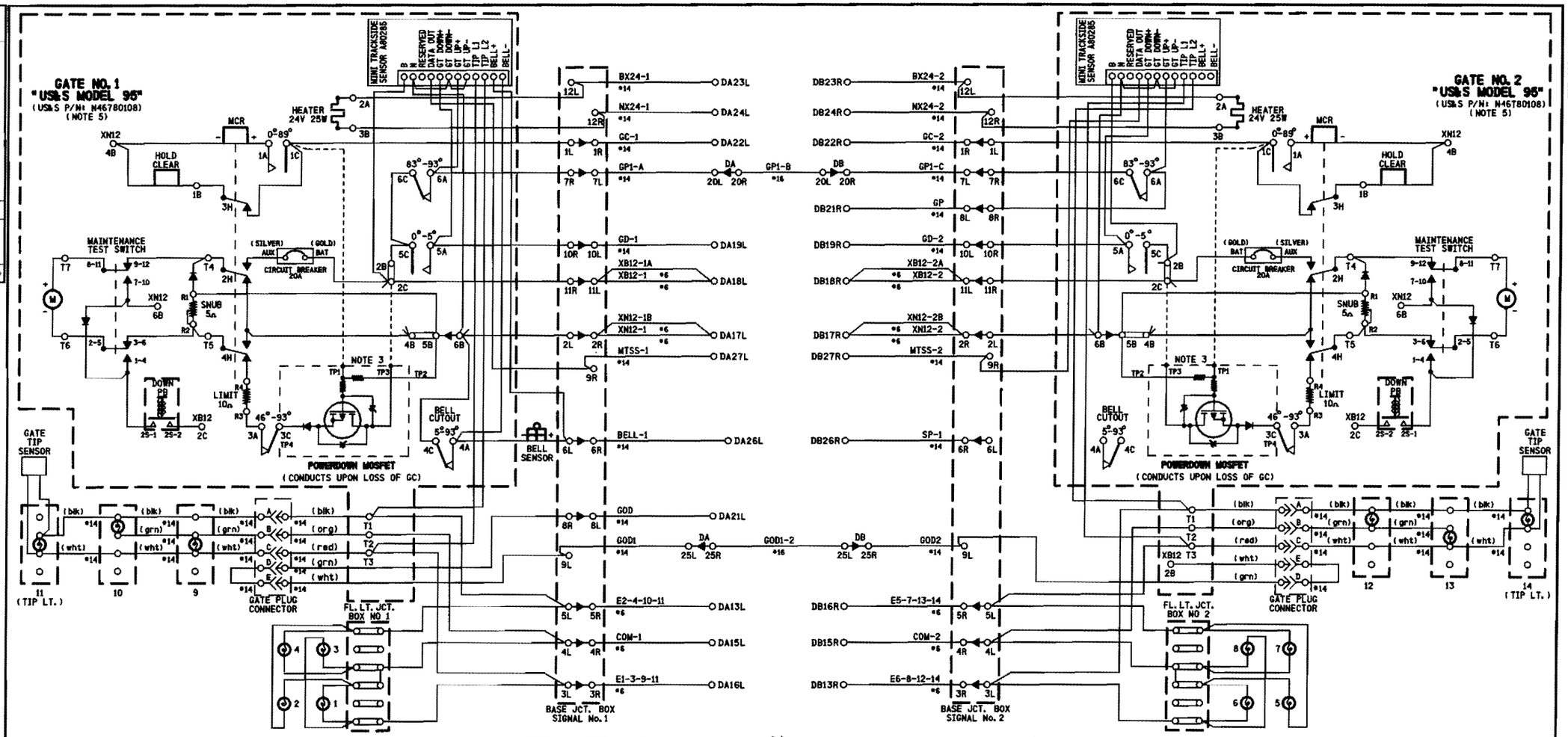

NOTES:

1) ON GATE No. 1 ADD STRAP BETWEEN TERMINAL 2B & 2C, ADD JUMPER BETWEEN TERMINAL 2B & 5C, BETWEEN TERMINAL 5C & 6C
2) ON GATE No. 2 ADD STRAP BETWEEN TERMINAL 2B & 2C ADD JUMPER BETWEEN TERMINAL 2B & 5C AND CONNECT GP AS SHOWN
3) POWERDOWN PCB TERMINALS TP1, TP3 & TP4 FIT OVER TERMINALS 1C, 2C & 3C RESPECTIVELY
4) ALL WIRING #10 AWG MINIMUM UNLESS OTHERWISE NOTED. WIRE SIZES SHOWN ARE MINIMUM GAUGE.
5) GATE DESCENT TIME (RELEASE FROM VERTICAL TO FULLY HORIZONTAL) TO BE WITHIN 11 SECONDS.
6) ENSURE ALL TERMINALS HAVE TWO SHOULDER NUTS.
7) FOR GATE(S) THAT HAS BELL, ADD JUMPER BETWEEN 4C AND 6B.

PROPOSED
DES. No. _____
RED-IN YELLOW-OUT
AS INSTALLED
DATE _____
BY _____

SAFETRAN SYSTEMS CORPORATION

DES.: APL	DATE: 07/31/09	JOB NO.: PICA10191	
CKD.: MKN	ISSUE DATE:	EST. NO.:	
DRN.: APL	PLAN NO.:	SHEET 10 OF 15	
P TIME: (415)	P DATE: 24-AUG-2009	CAD ID.: FRE-092. 60-10	

6' X 6' BUNGALOW

PROPOSED D	M	Y	REVISIONS	D	C	COMPLETED D	M	Y	C

REGION SOUTHERN
SUB. FREEPORT 382
CN

SIGNALS AND COMMUNICATIONS HOMEWOOD	DES. APL
31 JULY 2009	CH. MKN

GATE MECHANISM CONTROL CIRCUITS
US&S MODEL 95
FALCONER ROAD
ALWORTH, IL

FRE-092. 60-10

SAFETRAN SYSTEM CORP.
LOUISVILLE DIVISION, LOUISVILLE, KY

WATERMARK

FRE-092.60-11.dgn
24-AUG-2009

NO.	DATE	BY	DESCRIPTION	APP.	BY
1					
2					
3					
4					
5					

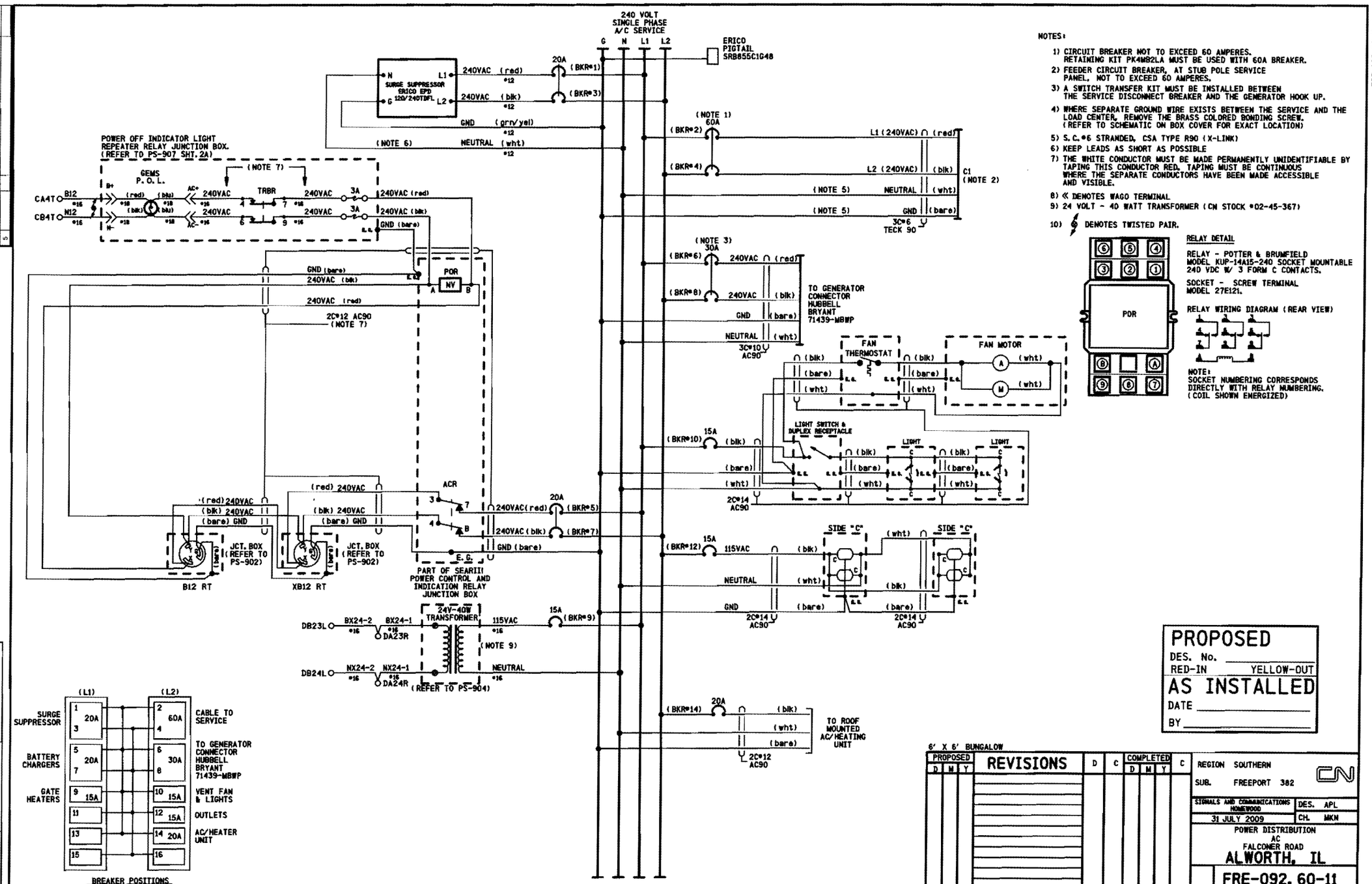

NOTES:

1) CIRCUIT BREAKER NOT TO EXCEED 60 AMPERES. RETAINING KIT PK4MB2LA MUST BE USED WITH 60A BREAKER.
2) FEEDER CIRCUIT BREAKER, AT STUB POLE SERVICE PANEL, NOT TO EXCEED 60 AMPERES.
3) A SWITCH TRANSFER KIT MUST BE INSTALLED BETWEEN THE SERVICE DISCONNECT BREAKER AND THE GENERATOR HOOK UP.
4) WHERE SEPARATE GROUND WIRE EXISTS BETWEEN THE SERVICE AND THE LOAD CENTER, REMOVE THE BRASS COLORED BONDING SCREW. (REFER TO SCHEMATIC ON BOX COVER FOR EXACT LOCATION)
5) S.C.#6 STRANDED, CSA TYPE R90 (X-LINK)
6) KEEP LEADS AS SHORT AS POSSIBLE
7) THE WHITE CONDUCTOR MUST BE MADE PERMANENTLY UNIDENTIFIABLE BY TAPING THIS CONDUCTOR RED. TAPING MUST BE CONTINUOUS WHERE THE SEPARATE CONDUCTORS HAVE BEEN MADE ACCESSIBLE AND VISIBLE.
8) « DENOTES WAGO TERMINAL
9) 24 VOLT - 40 WATT TRANSFORMER (CN STOCK #02-45-367)
10) DENOTES TWISTED PAIR.

RELAY DETAIL

RELAY - POTTER & BRUMFIELD MODEL KUP-14A15-240 SOCKET MOUNTABLE 240 VDC W/ 3 FORM C CONTACTS.

SOCKET - SCREW TERMINAL MODEL 27E121.

RELAY WIRING DIAGRAM (REAR VIEW)

NOTE:
SOCKET NUMBERING CORRESPONDS DIRECTLY WITH RELAY NUMBERING. (COIL SHOWN EMERGIZED)

BREAKER POSITIONS

PROPOSED
DES. No. _____
RED-IN YELLOW-OUT
AS INSTALLED
DATE _____
BY _____

6' X 6' BUNGALOW

PROPOSED D	M	Y	REVISIONS	D	C	COMPLETED D	M	Y	C

REGION SOUTHERN
SUB. FREEPORT 382
SIGNALS AND COMMUNICATIONS HOMEWOOD
31 JULY 2009
DES. APL
CH. MKN
POWER DISTRIBUTION
AC
FALCONER ROAD
ALWORTH, IL
FRE-092.60-11

SAFETRAN SYSTEM CORP.
LOUISVILLE DIVISION, LOUISVILLE, KY

SAFETRAN SYSTEMS CORPORATION

DES. : APL	DATE: 07/31/09	JOB NO. : PTCA10191	
CKD. : MKN	ISSUE DATE:	EST. NO. :	
DRN. : APL	PLAN NO. :	SHEET 11 OF 15	
P. TIME: 114:51	P. DATE: 24-AUG-2009	CAD ID. : FRE-092.60-11	

WATERMARK

FRE-092.60-12.dgn
24-AUG-2009

NO.	DATE	BY	REVISIONS DESCRIPTION	APP.	BY
1					
2					
3					
4					
5					

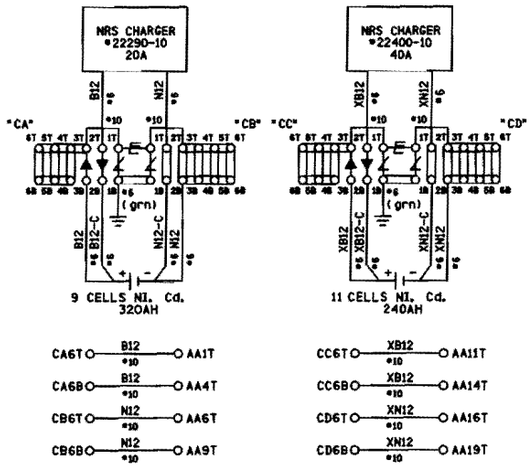

PROPOSED
DES. No. _____
RED-IN YELLOW-OUT
AS INSTALLED
DATE _____
BY _____

6' X 6' BUNGALOW

PROPOSED D	M	Y	REVISIONS	D	C	COMPLETED D	M	Y	C

REGION SOUTHERN
SUB. FREEPORT 382
CN

SIGNALS AND COMMUNICATIONS HOMEWOOD
31 JULY 2009
DES. APL
CH. MKN

POWER DISTRIBUTION
DC
FALCONER ROAD
ALWORTH, IL

FRE-092.60-12

SAFETRAN SYSTEM CORP.
LOUISVILLE DIVISION, LOUISVILLE, KY

SAFETRAN SYSTEMS CORPORATION

DES. : APL	DATE: 07/31/09	JOB NO.: P1(CA10191)	
CKD. : MKN	ISSUE DATE:	EST. NO.:	
DRN. : APL	PLAN NO.:	SHEET 12 OF 15	
P TIME:14:51	P DATE: 24-AUG-2009	CAD ID.: FRE-092.60-12	

WATERMARK

NO.	DATE	BY	DESCRIPTION	APP. BY
1				
2				
3				
4				
5				

Program Report

Location and SIN

DOT Number: 290095H
Milepost Number: 92.60
Site Name: Falconer Road

SIN: 762010010016

MCF and Template Selection

MCF Name: GCP-T6X-02-L.mcf
MCF Revision: 021
MCFCRC: 6076E435

Template = 1A:6 Trk BI

Check Numbers

Office Check No. (DT 4.6.0): 3327D951
Office Check Number: 3327D951
Config. Check Number: 76088D71
(Based on MCF Revision 021)

Program

BASIC: module configuration
Track 1 Slot = Track
Track 2/RIO 1 Slot = Not Used
Track 3 Slot = Not Used
Track 4 Slot = Not Used
Track 5/RIO 2 Slot = Not Used
Track 6/RIO 3 Slot = Not Used
SSCC-1 Slot = SSCC31
SSCC-2 Slot = SSCC31
SEAR Used = Yes

BASIC: MS/GCP operation
Track 1 : MS/GCP Operation = Yes

BASIC: island operation
Track 1 : Island Used = Internal

BASIC: preemption
Preempt Logic = No

BASIC: radio Dax links
Radio DAX link A Used = No
Radio DAX link B Used = No

BASIC: vital Comms links
Vital Comms link 1 Used = No
Vital Comms link 2 Used = No

PREDICTORS: track 1
Track 1 : Prime Used = Yes
Track 1 : Dax A Used = No
Track 1 : Dax B Used = No
Track 1 : Dax C Used = No
Track 1 : Dax D Used = No
Track 1 : Dax E Used = No
Track 1 : Dax F Used = No
Track 1 : Dax G Used = No

GCP: track 1
Track 1 : GCP Freq Category = Standard
Track 1 : GCP Frequency = 211 Hz
Track 1 : Approach Distance = 2566 ft
Track 1 : Uni/Bi/Sim-Bidirni = Bidirni
Track 1 : GCP Transmit Level = High
Track 1 : Island Connection = Isli
Track 1 : Island Distance = 120 ft
Track 1 : Computed Distance = 9999 ft
Track 1 : Linearization Steps = 100

GCP: track 1 enhanced det
Track 1 : Inbound PS Sensitivity = High
Track 1 : Speed Limiting Used = Yes
Track 1 : Outbound False Act Lvl = Normal
Track 1 : Outbound PS Timer = 20 sec
Track 1 : Trailing Switch Logic = On
Track 1 : Post Joint Detn Time = 15 sec
Track 1 : Adv Appr Predn = No
Track 1 : Cancel Pickup Delay = This Isl

GCP: track 1 prime
Track 1 : Prime Warning Time = 25 sec
Track 1 : Prime Offset Distance = 0 ft
Track 1 : Switch MS EZ Level = 12
Track 1 : Prime MS/GCP Mode = Pred
Track 1 : Prime Pickup Delay = 30 sec
Track 1 : Prime UAX = Not Used

GCP: track 1 pos start
Track 1 : Positive Start = Off
Track 1 : Sudden Shnt Det Used = No
Track 1 : Low EZ Detection Used = No

GCP: track 1 MS Control
Track 1 : MS/GCP Ctrl IP Used = No
Track 1 : MS Sensitivity Level = 0
Track 1 : Compensation Level = 1300
Track 1 : Warn Time-Ballast Comp = High
Track 1 : Low EX Adjustment = 39
Track 1 : Bidirn Dax Passthru = No
Track 1 : False Act on Train Stop = No
Track 1 : EX Limiting Used = Yes
Track 1 : EZ Correction Used = Yes

ISLAND: track 1
Track 1 : Isl Frequency = 8.3 kHz
Track 1 : Pickup Delay (2s +) = 0 sec
Track 1 : Isl Enable IP Used = No

AND: track Anding
AND 1 XR Used = Yes
AND 2 Used = No
AND 3 Used = No
AND 4 Used = No
AND 5 Used = No
AND 6 Used = No
AND 7 Used = No
AND 8 Used = No

AND: AND 1 XR
AND 1 XR Track 1 = Prime
AND 1 Enable Used = Yes
And 1 Enable Pickup = 0 sec
AND 1 Enable Drop = 0 sec
AND 1 Wrap Used = No

ADVANCED: MS restart
MS/GCP Restart Used = No

ADVANCED: out of service
OOS Control = OOS IPs

ADVANCED: out of service 2
T1 OOS Control = OOS Input 1
T1 OOS Controls = GCP and Island

ADVANCED: track wrap circuits
Wrap LOS Timer = 5 sec
Track 1 Wrap Used = No

ADVANCED: trk 1 overrides
Track 1 : All Predictors Override Used = No

ADVANCED: OR logic
OR 1 Used = No
OR 2 Used = No
OR 3 Used = No
OR 4 Used = No

ADVANCED: Internal I/O 1
Pass Thrus = No
Int. 1 Sets = Not Used
Int. 1 Set by = Not Used
Int. 2 Sets = Not Used
Int. 2 Set by = Not Used
Int. 3 Sets = Not Used
Int. 3 Set by = Not Used
Int. 4 Sets = Not Used
Int. 4 Set by = Not Used

ADVANCED: Internal I/O 2
Int. 5 Sets = Not Used
Int. 5 Set by = Not Used
Int. 6 Sets = Not Used
Int. 6 Set by = Not Used
Int. 7 Sets = Not Used
Int. 7 Set by = Not Used
Int. 8 Sets = Not Used
Int. 8 Set by = Not Used

ADVANCED: Internal I/O 3
Int. 9 Sets = Not Used
Int. 9 Set by = Not Used
Int. 10 Sets = Not Used
Int. 10 Set by = Not Used
Int. 11 Sets = Not Used
Int. 11 Set by = Not Used
Int. 12 Sets = Not Used
Int. 12 Set by = Not Used

ADVANCED: Internal I/O 4
Int. 13 Sets = Not Used
Int. 13 Set by = Not Used
Int. 14 Sets = Not Used
Int. 14 Set by = Not Used
Int. 15 Sets = Not Used
Int. 15 Set by = Not Used
Int. 16 Sets = Not Used
Int. 16 Set by = Not Used

ADVANCED: site options
Daylight Savings = On
Units = Standard
Maint Call Rpt IP Used = No
Emergency Activate IP = No
EZ/EX Logging = Change
EZ/EX Point Change = 3

SSCC
Gates Used = Yes
SSCC1+2 GPs Coupled = Yes
Min Activation = 20 sec
Rmt Activation Cancel = 3 min
Bell On Gate Rising = No
Mute Bell On Gate Down = No
SSCCIV Controller Used = No

SSCC: 1
SSCC-1 Activation = AND 1 XR
SSCC-1 Gate Delay = 3 sec
SSCC-1 Number of GPs = 1
SSCC-1 Number of GDs = 1
SSCC 1 : Flash Rate = 60
SSCC 1 : Low Battery Detection = No
SSCC 1 : Flash Sync = master
SSCC 1 : Invert Gate Output = No
SSCC 1 : Lamp Neutral Test = Off
Aux-1 Xng Ctrl Used = No

SSCC: 2
SSCC-2 Activation = AND 1 XR
SSCC-2 Gate Delay = 3 sec
SSCC-2 Number of GPs = 0
SSCC-2 Number of GDs = 1
SSCC 2 : Flash Rate = 60
SSCC 2 : Low Battery Detection = No
SSCC 2 : Flash Sync = slave
SSCC 2 : Invert Gate Output = No
SSCC 2 : Lamp Neutral Test = Off
Aux-2 Xng Ctrl Used = No

OUTPUT: assignment page 1
OUT 1.1 = Not Used
OUT 1.2 = Not Used

INPUT: assignment page 1
IN 1.1 = Not Used
IN 1.2 = Not Used

IO: assignment SSCC
OUT GC 1 = Gate Output 1
OUT GC 2 = Gate Output 2
IN 7.1 = AND 1 XR Enable
IN 7.2 = Not Used
IN 7.3 = Not Used
IN 7.4 = GD 1.1
IN 7.5 = GP 1.1
IN 8.1 = Out Of Service IP 1
IN 8.2 = Not Used
IN 8.3 = Not Used
IN 8.4 = GD 2.1
IN 8.5 = Not Used

SEAR
SEAR Subnode = 99
DI 1 = General 1
DI 2 = Gnd Flt Tester 1
Rly 1 = Ground Fault Test
Rly 2 = AC Control

SEAR: inputs
SP 2.1 = POK 1
SP 3.1 = Not Used
SP 4.1 = Not Used
SP 5.1 = Not Used
SP 6.1 = Not Used

SEAR: slot 1-4 inputs
IN 1.1 = Not Used
IN 1.2 = Not Used
IN 2.1 = Not Used
IN 2.2 = POK 2
IN 3.1 = Not Used
IN 3.2 = Not Used
IN 4.1 = Not Used
IN 4.2 = Not Used

SEAR: inputs slot 5
IN 5.1 = Not Used
IN 5.2 = Not Used

SEAR: inputs slot 6
IN 6.1 = Not Used
IN 6.2 = Not Used

SEAR: slot 7-8 inputs
IN 7.2 = Not Used
IN 7.3 = TSS 1
IN 8.2 = Not Used
IN 8.3 = TSS 2
IN 8.5 = General 2

SITE: programming
Radio Subnode = 1
Field Password = Off
Low Battery Enabled = Off

Configuration Package File

Filename: 290095H.pac

TEMPLATE MTF-1A

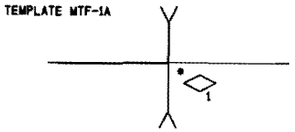

* INDICATES TRACK WITH ISLAND

FRE-092.60-13.dgn
24-AUG-2009

NOTES:

1) DISTANCE(S) TO BE VERIFIED AT INSTALLATION. INDICATE SELECTED PROGRAMMED VALUE IF DIFFERENT THAN SHOWN. REFER TO 4000 GCP INSTRUCTION/INSTALLATION MANUAL FOR PROGRAMMING PARAMETERS.

2) PROGRAM TEXT HIGHLITED IN RED INDICATES 4000 PROGRAM MODIFICATIONS TO DEFAULT PROGRAM VALUES.

3) EACH CONSTANT WARNING DEVICE SYSTEM TO BE PROGRAMMED TO CONVERT TO A MOTION SENSOR 300 FEET FROM EDGE OF ROAD TRAVELLED WAY.
SHUNT TRACK 300 FEET FROM EDGE OF ROAD TRAVELLED WAY AND NOTE "EZ" VALUE.
PROGRAM EACH SYSTEM WITH THE INDICATED "EZ" VALUE +2.

4) VERIFY SET TIMER VALUE TO MATCH ACTUAL TRAIN MOVEMENT WITHIN THE CROSSING APPROACH CIRCUITS.

PROPOSED
DES. No. _____
RED-IN YELLOW-OUT
AS INSTALLED
DATE _____
BY _____

PROPOSED D	M	Y	REVISIONS	D	C	COMPLETED D	M	Y	C

REGION SOUTHERN
SUB. FREEPORT 382

SIGNALS AND COMMUNICATIONS HOMEWOOD
31 JULY 2009
DES. APL
CH. MKN

GCP 4000
PROGRAM INFORMATION
FALCONER ROAD
ALWORTH, IL

FRE-092.60-13

SAFETRAN SYSTEM CORP.
LOUISVILLE DIVISION, LOUISVILLE, KY

SAFETRAN SYSTEMS CORPORATION

DES. : APL	DATE: 07/31/09	JOB NO. : PICA10191	
CKD. : MKN	ISSUE DATE:	EST. NO. :	
DRN. : APL	PLAN NO. :	SHEET 13 OF 15	
P. TIME: 14:52	P. DATE: 24-AUG-2009	CAD ID. : FRE-092.60-13	

WATERMARK

NO.	DATE	BY	REVISIONS DESCRIPTION	APP. BY
1				
2				
3				
4				
5				

TO CONFIGURE SEARII & SEARIII PRESS SITE SETUP KEY. USE ARROW KEYS TO MAKE SELECTION, PRESS ENTER AFTER SELECTION HAS BEEN MADE.

STAGE 1

PROGRAM MENU QUESTIONS	PROGRAM	OPTIONS/RANGE
DATE/TIME?	CURRENT DATE/TIME	CURRENT DATE/TIME
AUTOMATIC DST ADJUSTMENT?	YES	YES, NO
TIME ZONE?	CENTRAL	EASTERN, CENTRAL, MOUNTAIN, PACIFIC, ALASKA, HAWAII, ATLANTIC, SASKATCHEWAN, NEW FOUNLAND
SITE NAME?	FALCONER ROAD	STREET NAME
MILE POST?	92.60	MILEAGE
DOT/CROSSING IS #?	290 095H	
TESTER TYPE?	CROSSING	CROSSING, WAYSIDE
DATE FORMAT?	dd-mm-yyyy	mm-dd-yyyy, dd-mm-yyyy
TEMPERATURE FORMAT?	FAHRENHEIT	FAHRENHEIT, CELSIUS
SITE TYPE?	NO COM	NO COM, BULLHORN, DIALUP, NODE, COLLECTOR
SITE ATCS ADDRESS?	7.620.100.100.99.01	7.RRR.LLL.GGG.99.01
OFFICE ATCS ADDRESS?		2.RRR.NN.DDDD
(FOR NODE USE) PRIMARY HOP ADDR?		7.RRR.LLL.GGG.00.01
(FOR NODE USE) BACKUP HOP ADDR1?		7.RRR.LLL.GGG.00.01
(FOR NODE USE) BACKUP HOP ADDR2?		7.RRR.LLL.GGG.00.01
(FOR COLLECTOR USE) POLL ID?		1-99
(FOR COLLECTOR USE) MODE?		GEN/ATCS, GENISYS
(FOR COLLECTOR USE) WAMS/XID?		ENABLED, DISABLE
(FOR COLLECTOR USE) OFFICE COMM. DEVICE?		DIRECT (RS232) MCM (RS232) MCM (ECHELON) SREAD SPEC (ECHELON) DIAL MODEM (RS232) S200 RADIO (RS422)
(FOR COLLECTOR USE) OFFICE PHONE NUMBER?		PHONE NUMBER OF WAMS
(FOR COLLECTOR USE) INIT STRING?		OPTIONAL HAYES MODEM INITIALIZATION STRING
FIELD COMM. DEVICE?		VHF COMM. (ECHELON) VHF COMM. (RS232) SPREAD SPEC (ECHELON) SPREAD SPEC (RS232)
USER PORT?	57600, 8, N, 1, N	BAUD, DATA BITS, PARITY, STOP BITS, FLOW CONTROL
AUX PORT?	9600, 8, N, 1, N	BAUD, DATA BITS, PARITY, STOP BITS, FLOW CONTROL

YOU WILL NOW SEE A MESSAGE "PLEASE WAIT COMPILING STAGE 1"
CONTINUE TO NEXT PROGRAM MENU QUESTIONS.

STAGE 2

QUESTION	PROGRAM	SELECTION 1 (MINIMUM)	SELECTION 2 (MAXIMUM)	CONDITION FOR MENU DISPLAY
RESET NAMES / MODULES ?	NO	YES	NO	ALWAYS
RAILROAD NUMBER ?	360	1	999	ALWAYS
CROSSING CONFIGURATION	NORMAL	NORMAL	SPLIT GATE (NOTE 2)	ALWAYS
ENTRANCE GATES ?	2	0	8	ALWAYS
GATE POSTION FAIL TIME (SECONDS) ?	N/A	10	60	GATES > 0
BATTERY BANKS ?	2	1	3	ALWAYS
BATT MON USED ?	NO	NO	YES	ALWAYS
INTERNAL CROSSING CONTROLLERS ?	2	0	2	ALWAYS
EXTERNAL CROSSING CONTROLLERS ?	0	0	2	CROSSING CONTROLLER = YES
VHF COMMUNICATOR ?	YES	YES	NO	ALWAYS
DTMF ACTIVATION?	NO	NO	YES	RAILROAD = 360
ACTIVATION CODE ?	N/A	1	999	VHF COMMUNICATOR = YES
ACTIVATION TIMEOUT ?	N/A	1	600	VHF COMMUNICATOR = YES
ILOD MODULES ?	2	0	4	ALWAYS
ANY LED BULBS USED ?	YES	NO	YES	ILOD MODULES > 0
AUTO INSPECTION ?	NO	YES	NO	ALWAYS
BELL SENSORS ?	1	0	8	ALWAYS
BELL SENSORS TSS1 ?	YES	NO	YES	BELL SENSORS > 0
BELL SENSORS TSS2 ?	N/A	NO	YES	BELL SENSORS > 0
BELL SENSORS TSS3 ?	N/A	NO	YES	BELL SENSORS > 0
BELL SENSORS TSS4 ?	N/A	NO	YES	BELL SENSORS > 0
BELL SENSORS TSS5 ?	N/A	NO	YES	BELL SENSORS > 0
BELL SENSORS TSS6 ?	N/A	NO	YES	BELL SENSORS > 0
BELL SENSORS TSS7 ?	N/A	NO	YES	BELL SENSORS > 0
BELL SENSORS TSS8 ?	N/A	NO	YES	BELL SENSORS > 0
BELL ON ?	GATES LOWERING	GATES LOWERING	GATES MOVING	BELL SENSORS > 0
GFT'S ?	YES	YES	NO	ALWAYS
BATTERIES ON GFT1 ?	2	1	2	GFT'S = YES
GATE TIP SENSORS ?	YES	YES	NO	GATES > 0
RTU ?	NO	NO	YES	ALWAYS
VHF VOICE CHANNEL ?	1 (NOTE 1)	1	8	VHF COMMUNICATOR = YES
VHF DATA CHANNEL ?	1 (NOTE 1)	1	8	VHF COMMUNICATOR = YES
USE CELL MODEM NON-CRITICAL FEATURE ?	NO	NO	YES	ALWAYS
FULL APPROACH MOVE ALARMS ?	ACTIVATE	ACTIVATE	DO NOT ACTIVATE	ALWAYS

YOU WILL NOW SEE A MESSAGE "PLEASE WAIT COMPILING STAGE 2"
CONTINUE TO NEXT PROGRAM MENU QUESTIONS.

STAGE 3

PROGRAM MENU QUESTIONS	PROGRAM
EDIT DIGITAL INPUTS	NO
EDIT BATTERIES	NO
EDIT RELAYS	NO
EDIT TEST LEDS	NO
EDIT ILOD SENSORS	NO
EDIT VHF SETTINGS	NO
GCP4K ATCS SUBNODE?	16

SAVE CONFIGURATION

NOTES:

1) INDICATE SELECTION IN SPACE PROVIDED.
2) ADDITIONAL OPTIONS: DUAL CROSSING, EXTERNAL ENTRANCE GATE CONTROLLERS.

PROPOSED
DES. No. _____
RED-IN YELLOW-OUT
AS INSTALLED
DATE _____
BY _____

SEARIII EXECUTIVE 9V725 REV. A01U, SEARIII APPLICATION 9V864 REV. A01J

PROPOSED D	M	Y	REVISIONS	D	C	COMPLETED D	M	Y	C

REGION SOUTHERN
SUB. FREEPORT 382
CN
SIGNALS AND COMMUNICATIONS HOMEWOOD — DES. APL
31 JULY 2009 — CH. MKN
GCP 4000/SEAR III
SETUP AND PROGRAM
FALCONER ROAD
ALWORTH, IL
FRE-092.60-14

SAFETRAN SYSTEM CORP.
LOUISVILLE DIVISION, LOUISVILLE, KY

SAFETRAN SYSTEMS CORPORATION
DES.: APL — DATE: 07/31/09 — JOB NO.: PICA10191
CKD.: MKN — ISSUE DATE: — EST. NO.: 1
DRN.: APL — PLAN NO.: 1 — SHEET 14 OF 15
P. TIME: 14:52 — P. DATE: 24-AUG-2009 — CAD ID.: FRE-092.60-14

FRE-092.60-14.dgn
24-AUG-2009

WATERMARK

FRE-092.60-15.dgn
24-AUG-2009

NO.	DATE	BY	REVISIONS DESCRIPTION	APP. BY
1				
2				
3				
4				
5				

CALIBRATION HISTORY

INITIAL SET UP BY: _____ DATE: _____

DC VOLTAGE READINGS AFTER CALIBRATION				CALIBRATION HISTORY										LINEARIZATION HISTORY (NOTE 1)							
				EZ/EX VALUES (TRACK UNOCCUPIED)				HARD WIRE SHUNT AT TERMINATION SHUNT						HARD WIRE SHUNT AT 50 PERCENT POINT OF SHUNT							
				EZ		EX		EZ		EX		50 PERCENT OF EZ VALUE		NO LINEARIZATION				LINEARIZATION COMPLETE			
														EZ		EX		STEP±		EZ	
				NRML	STBY	NRML	STBY	NRML	STBY	NRML	STBY	NRML	STBY	NRML	STBY	NRML	STBY	NRML	STBY	NRML	STBY
T1	Z1=	WEST	TRACK 1																		
	Z2=	EAST	TRACK 1																		

CALIBRATION HISTORY

INITIAL SET UP BY: _____ DATE: _____

DC VOLTAGE READINGS AFTER CALIBRATION				CALIBRATION HISTORY										LINEARIZATION HISTORY (NOTE 1)							
				EZ/EX VALUES (TRACK UNOCCUPIED)				HARD WIRE SHUNT AT TERMINATION SHUNT						HARD WIRE SHUNT AT 50 PERCENT POINT OF SHUNT							
				EZ		EX		EZ		EX		50 PERCENT OF EZ VALUE		NO LINEARIZATION				LINEARIZATION COMPLETE			
														EZ		EX		STEP±		EZ	
				NRML	STBY	NRML	STBY	NRML	STBY	NRML	STBY	NRML	STBY	NRML	STBY	NRML	STBY	NRML	STBY	NRML	STBY
T1	Z1=	WEST	TRACK 1																		
	Z2=	EAST	TRACK 1																		

CALIBRATION HISTORY

INITIAL SET UP BY: _____ DATE: _____

DC VOLTAGE READINGS AFTER CALIBRATION				CALIBRATION HISTORY										LINEARIZATION HISTORY (NOTE 1)							
				EZ/EX VALUES (TRACK UNOCCUPIED)				HARD WIRE SHUNT AT TERMINATION SHUNT						HARD WIRE SHUNT AT 50 PERCENT POINT OF SHUNT							
				EZ		EX		EZ		EX		50 PERCENT OF EZ VALUE		NO LINEARIZATION				LINEARIZATION COMPLETE			
														EZ		EX		STEP±		EZ	
				NRML	STBY	NRML	STBY	NRML	STBY	NRML	STBY	NRML	STBY	NRML	STBY	NRML	STBY	NRML	STBY	NRML	STBY
T1	Z1=	WEST	TRACK 1																		
	Z2=	EAST	TRACK 1																		

NOTE:

1) **SET UP APPROACH LENGTH AND LINEARIZATION CALIBRATION**
VERIFY THAT "ENHANCED DETECTION" MODE IS PROGRAMMED "OFF" BEFORE ATTEMPTING LINEARIZATION PROCEDURES.

PROPOSED
DES. No. _____
RED-IN _____ YELLOW-OUT
AS INSTALLED
DATE _____
BY _____

PROPOSED D	M	Y	REVISIONS	D	C	COMPLETED D	M	Y	C

REGION SOUTHERN
SUB. FREEPORT 382
CN

SIGNALS AND COMMUNICATIONS HOMEWOOD
31 JULY 2009
DES. APL
CH. MKN

GCP 4000
CALIBRATION HISTORY
FALCONER ROAD
ALWORTH, IL

FRE-092.60-15

15

SAFETRAN SYSTEM CORP.
LOUISVILLE DIVISION, LOUISVILLE, KY

SAFETRAN SYSTEMS CORPORATION

DES.: APL	DATE: 07/31/09	JOB NO.: PICA10191	
CKD.: MKN	ISSUE DATE:	EST. NO.:	
DRN.: APL	PLAN NO.:	SHEET 15 OF 15	
P TIME: 14:52	P DATE: 24-AUG-2009	CAD ID.: FRE-092.60-15	

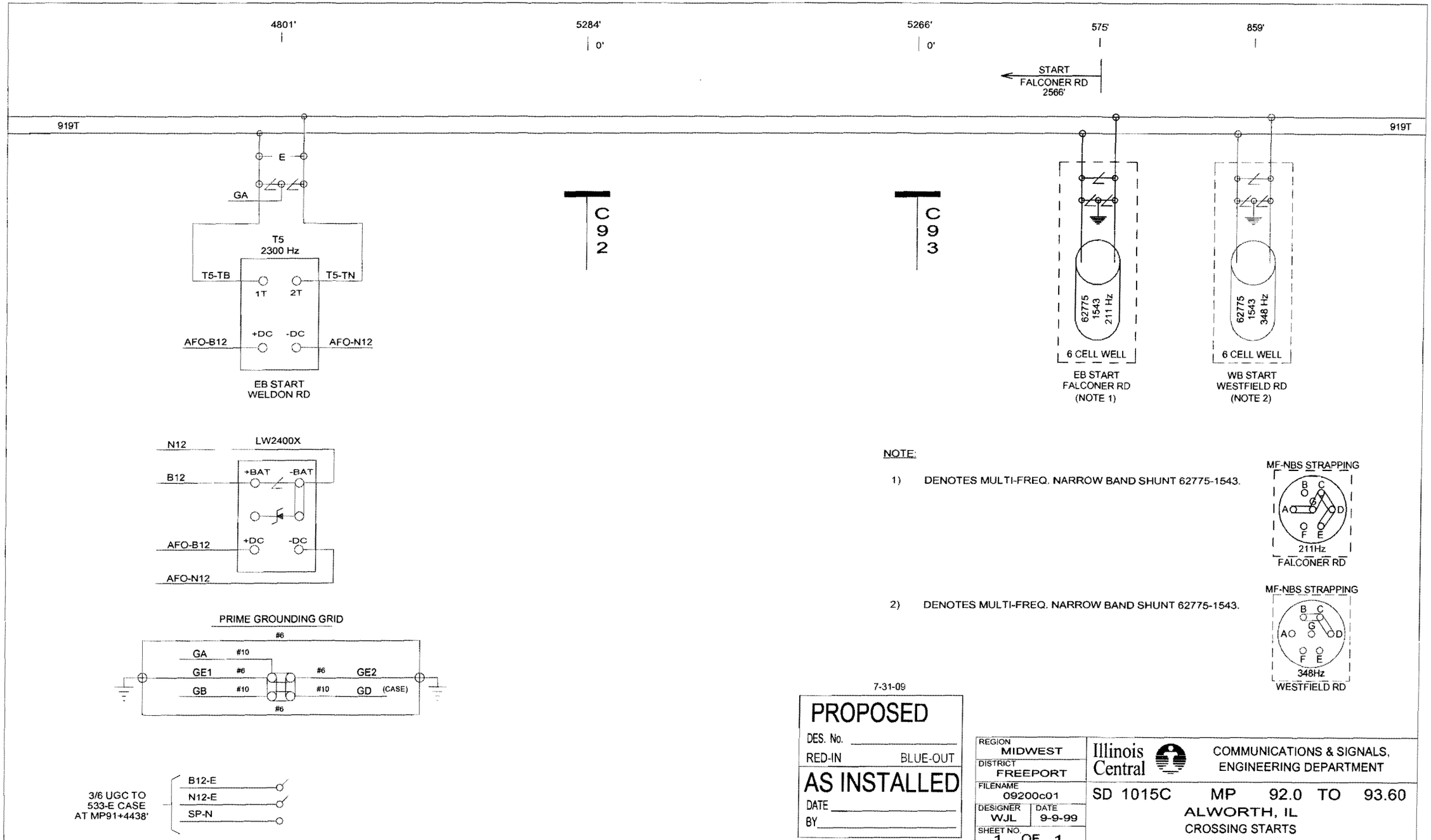
4801'
5284'
0'
5266'
0'
575'
859'
START
FALCONER RD
2566'
919T
919T
E
GA
T5
2300 Hz
T5-TB
T5-TN
1T
2T
AFO-B12
+DC
-DC
AFO-N12
EB START
WELDON RD
C
9
2
C
9
3
62775
1543
211 Hz
6 CELL WELL
EB START
FALCONER RD
(NOTE 1)
62775
1543
348 Hz
6 CELL WELL
WB START
WESTFIELD RD
(NOTE 2)
N12
LW2400X
B12
+BAT
-BAT
AFO-B12
+DC
-DC
AFO-N12
PRIME GROUNDING GRID
#6
GA
#10
GE1
#6
#6
GE2
GB
#10
#10
GD
(CASE)
#6
3/6 UGC TO
533-E CASE
AT MP91+4438'
B12-E
N12-E
SP-N
NOTE:
1) DENOTES MULTI-FREQ. NARROW BAND SHUNT 62775-1543.
2) DENOTES MULTI-FREQ. NARROW BAND SHUNT 62775-1543.
MF-NBS STRAPPING
B
C
G
A
D
F
E
211Hz
FALCONER RD
MF-NBS STRAPPING
B
C
G
A
D
F
E
348Hz
WESTFIELD RD
7-31-09
PROPOSED
DES. No.
RED-IN
BLUE-OUT
AS INSTALLED
DATE
BY
REGION
MIDWEST
DISTRICT
FREEPORT
FILENAME
09200c01
DESIGNER
WJL
DATE
9-9-99
SHEET NO.
1 OF 1
Illinois Central
COMMUNICATIONS & SIGNALS,
ENGINEERING DEPARTMENT
SD 1015C MP 92.0 TO 93.60
ALWORTH, IL
CROSSING STARTS
5
4
3
2
2-14-00
1
REVISIONS