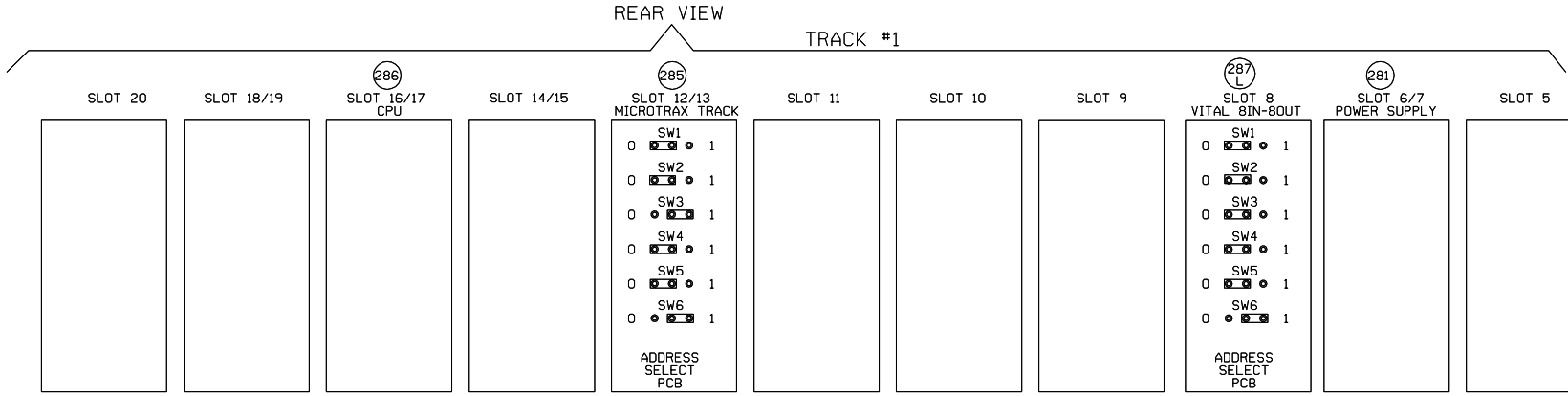

ML8CNWRR

PROGRAM ID 1 (BINARY 1)	X
PROGRAM ID 2 (BINARY 2)	
PROGRAM ID 3 (BINARY 4)	X
PROGRAM ID 4 (BINARY 8)	
PROGRAM ID 5 (BINARY 16)	
PROGRAM ID 6 (BINARY 32)	X
PROGRAM ID 7 (BINARY 64)	
PROGRAM ID 8 (BINARY 128)	
CODE PQTU?	X

PLACE AN "X" IN THE BOX FOR DESIRED CONFIGURATION.

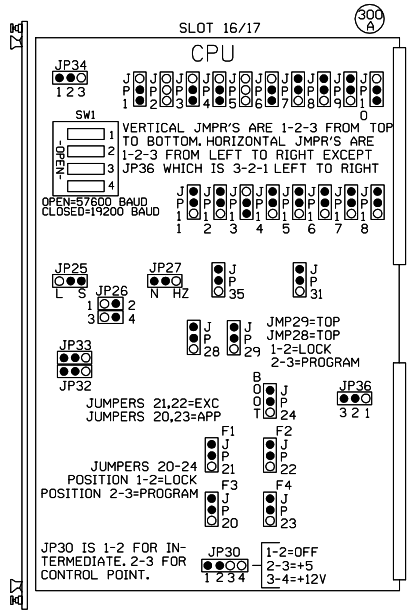

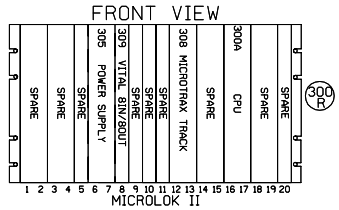

NEW SHEET
GENEVA SUBDIVISION
REGEN. REPEATER
M.P. 25.02
8'X14' HOUSE

1 06-09-08 INSTALL HALF BLOCK SYSTEM FROM TURNER TO PARK, ILLINOIS. PHASE I PART I (MP. 29.50 TO MP. 25.54) AFE #88114 JJL / /CTC/MDF	MODIFICATION LEVEL		UNION PACIFIC QUALITY PRODUCTIVITY SAFETY SIGNAL DESIGN	DES: CTC DIG: CTC CHK: JJL A.F.E. 88114 ID= GEN2502.15S	UNION PACIFIC RAILROAD CHICAGO, ILLINOIS TO CLINTON, IOWA C.T.C. CIRCUITS Office of Sr AVP Engineering - Signal/TCO Omaha, Nebraska	DATE 06-09-08 SHEET 15 DWG 25.02 GEN
	Q.A. LAST LEVEL CHECKED	DQ				
	LAST LEVEL MOD THIS TYPICAL	DQ				
	LAST LEVEL BY DESIGNER	DQ				
	CHANGED FROM TYPICAL?	Y				
	mv 02/01/08 2TMLINTC.5					

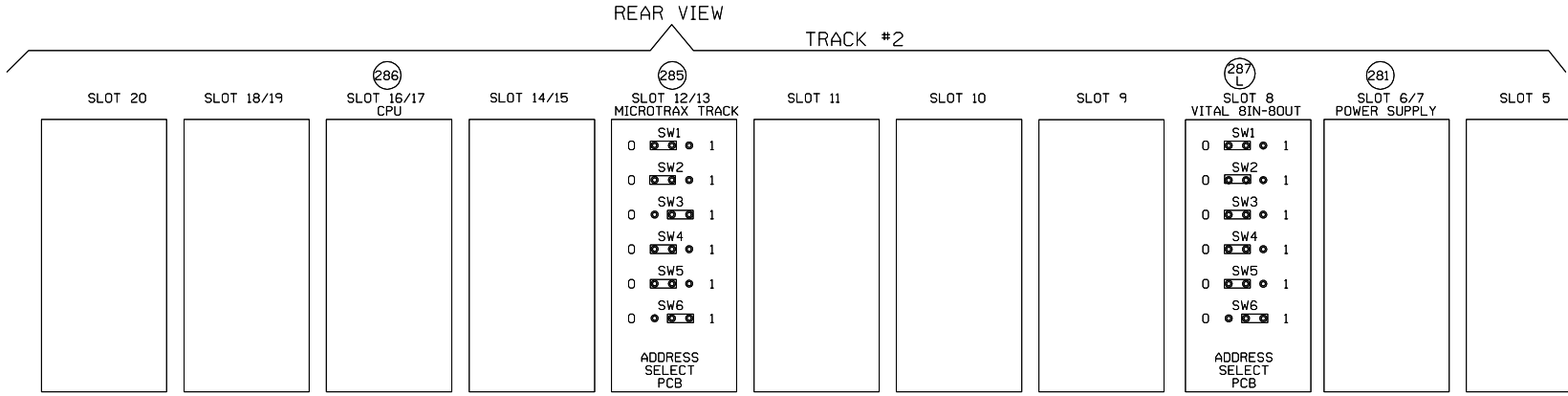

ML8CNWRR

PROGRAM ID 1 (BINARY 1)	X
PROGRAM ID 2 (BINARY 2)	
PROGRAM ID 3 (BINARY 4)	X
PROGRAM ID 4 (BINARY 8)	
PROGRAM ID 5 (BINARY 16)	
PROGRAM ID 6 (BINARY 32)	X
PROGRAM ID 7 (BINARY 64)	
PROGRAM ID 8 (BINARY 128)	
CODE PQTU?	X

PLACE AN "X" IN THE BOX FOR DESIRED CONFIGURATION.

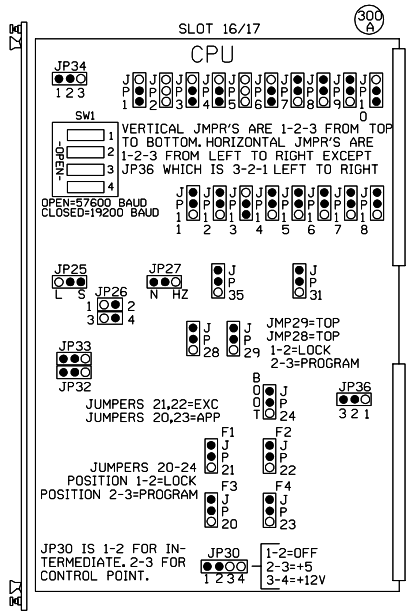

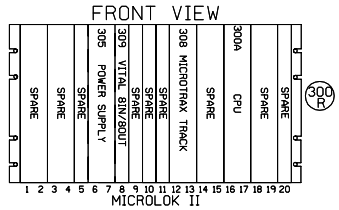

NEW SHEET
GENEVA SUBDIVISION
REGEN. REPEATER
M.P. 25.02
8'X14' HOUSE

1 06-09-08 INSTALL HALF BLOCK SYSTEM FROM TURNER TO PARK, ILLINOIS. PHASE I PART I (MP. 29.50 TO MP. 25.54) AFE #88114 JJL / /CTC/MDF	MODIFICATION LEVEL		UNION PACIFIC QUALITY PRODUCTIVITY SAFETY SIGNAL DESIGN	DES: CTC
	Q.A. LAST LEVEL CHECKED	DQ		DIG: CTC
	LAST LEVEL MOD THIS TYPICAL	DQ		CHK: JJL
	LAST LEVEL BY DESIGNER	DQ		A.F.E. 88114
	CHANGED FROM TYPICAL?	Y		ID= GEN2502.15AS
	mv 02/01/08 2TM.INTC.5A			

UNION PACIFIC RAILROAD

CHICAGO, ILLINOIS TO
CLINTON, IOWA
C.T.C. CIRCUITS

Office of Sr AVP Engineering - Signal/TCO Omaha, Nebraska

DATE 06-09-08
SHEET 15A
DWG 25.02
GEN

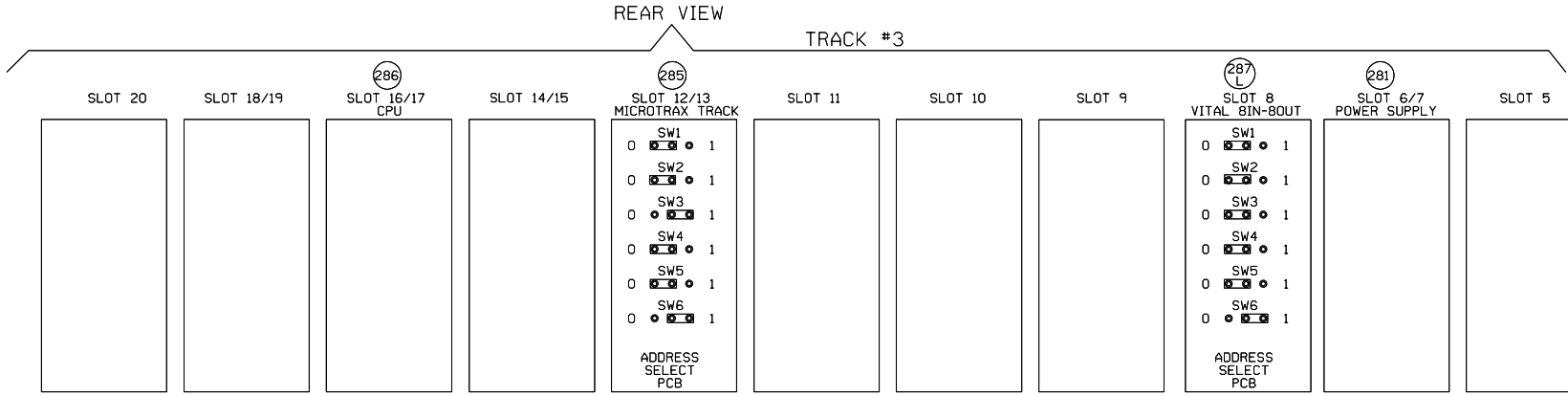

ML8CNWRR

PROGRAM ID 1 (BINARY 1)	X
PROGRAM ID 2 (BINARY 2)	
PROGRAM ID 3 (BINARY 4)	X
PROGRAM ID 4 (BINARY 8)	
PROGRAM ID 5 (BINARY 16)	
PROGRAM ID 6 (BINARY 32)	X
PROGRAM ID 7 (BINARY 64)	
PROGRAM ID 8 (BINARY 128)	
CODE PQTU?	X

PLACE AN "X" IN THE BOX FOR DESIRED CONFIGURATION.

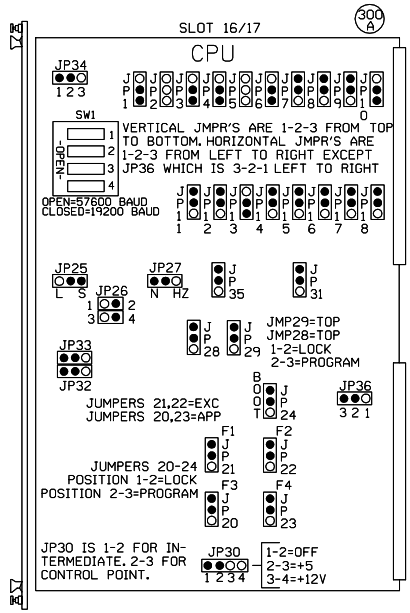

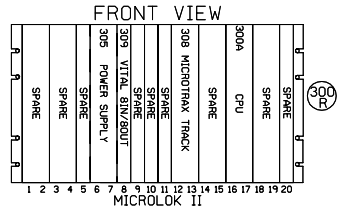

NEW SHEET
GENEVA SUBDIVISION
REGEN. REPEATER
M.P. 25.02
8'X14' HOUSE

1	06-09-08	INSTALL HALF BLOCK SYSTEM FROM TURNER TO PARK, ILLINOIS. PHASE I PART I (MP. 29.50 TO MP. 25.54) AFE #88114	JJL /CTC/MDF

MODIFICATION LEVEL

Q.A. LAST LEVEL CHECKED	DQ
LAST LEVEL MOD THIS TYPICAL	DQ
LAST LEVEL BY DESIGNER	DQ
CHANGED FROM TYPICAL?	Y

mv 02/01/08 2TMLINTC.5

UNION PACIFIC
QUALITY PRODUCTIVITY SAFETY
SIGNAL DESIGN

DES:	CTC
DIG:	CTC
CHK:	JJL
A.F.E.	88114
ID= GEN2502.15BS	

UNION PACIFIC RAILROAD

CHICAGO, ILLINOIS TO
CLINTON, IOWA
C.T.C. CIRCUITS

Office of Sr AVP Engineering - Signal/TCO Omaha, Nebraska

DATE	06-09-08
SHEET	15B
DWG	25.02
	GEN

PLAN VIEW
8'x14' HOUSE
—NO SCALE—

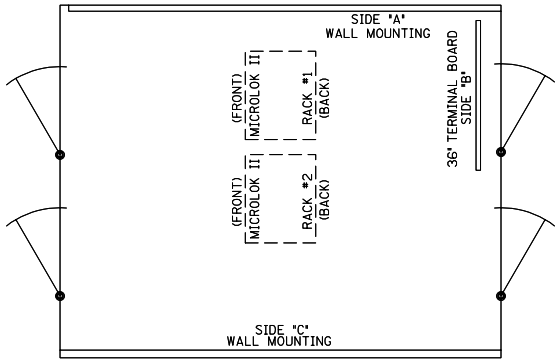

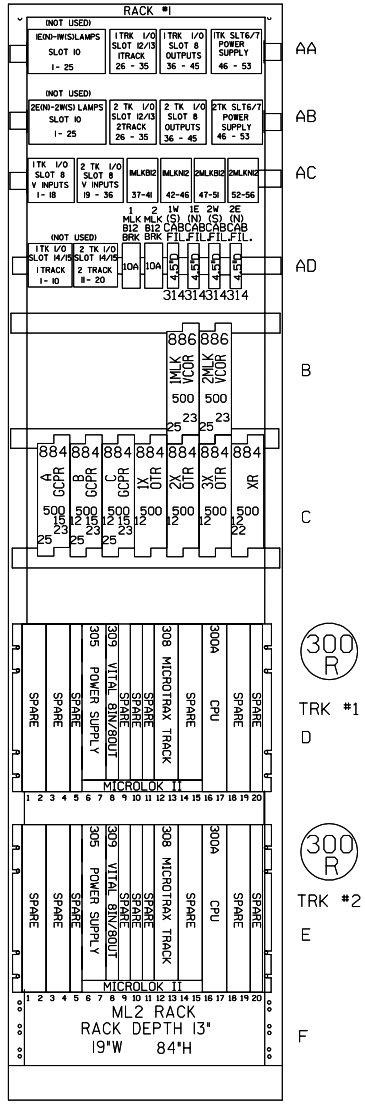

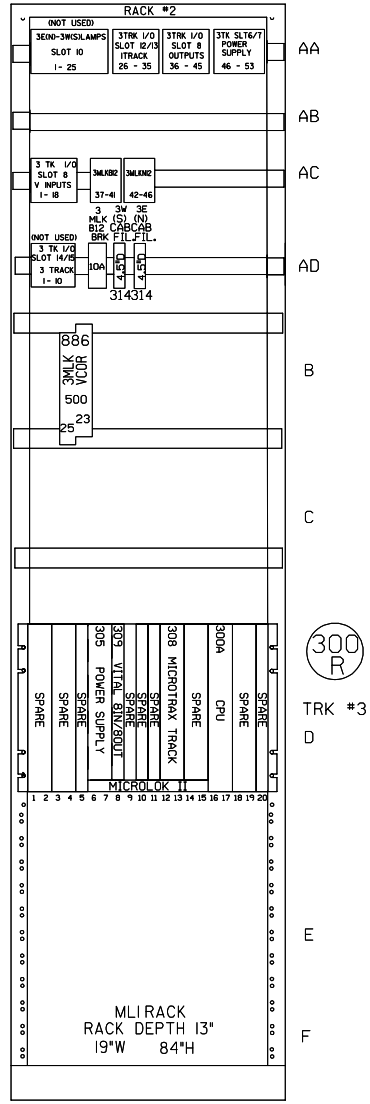

TYPICAL CONTACT CONFIGURATIONS
FOR PLUG-IN RELAYS

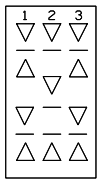

4FB-2F-1B

LEGEND

— = CONTACT HEEL

▽ = CONTACT FRONT

△ = CONTACT BACK

NEW SHEET
WHEATON, ILLINOIS
WEST STREET
M.P. 25.02
GENEVA SUBDIVISION
D.O.T.#174 924K

1	06-09-08	INSTALL HALF BLOCK SYSTEM FROM TURNER TO PARK, ILLINOIS. PHASE 1 PART 1 (MP. 29.50 TO MP. 25.54) AFE #88114	JJL / /CTC/MDF

MODIFICATION LEVEL	
Q. A. LAST LEVEL CHECKED	DQ
LAST LEVEL MOD THIS TYPICAL	DQ
LAST LEVEL BY DESIGNER	DQ
CHANGED FROM TYPICAL?	Y

REV 02/01/08 2TMLINTC.6MX

UNION PACIFIC
QUALITY PRODUCTIVITY SAFETY
SIGNAL DESIGN

DES:	CTC
DIG:	CTC
CHK:	JJL
A.F.E.	88114
ID:	GEN2502.16X

UNION PACIFIC RAILROAD

CHICAGO, ILLINOIS TO
CLINTON, IOWA
C.T.C. CIRCUITS

Office of Sr AVP Engineering - Signal/TCO Omaha, Nebraska

DATE	06-09-08
SHEET	16
DWG	25.02
	GEN

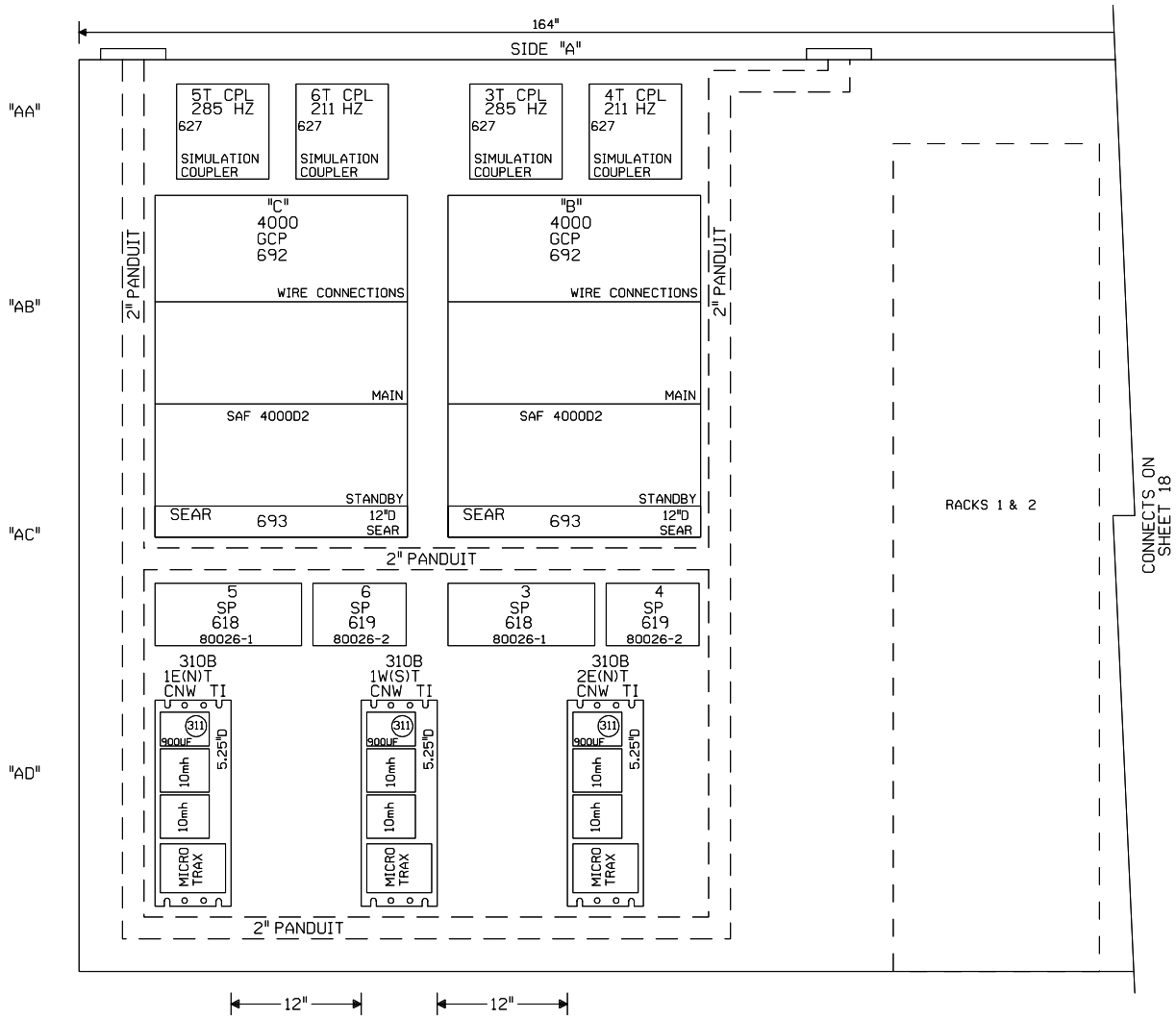

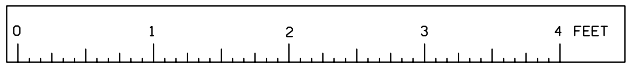

SCALE: 1.5 INCHES = 1 FOOT

NEW SHEET
WHEATON, ILLINOIS
WEST STREET
M.P. 25.02
GENEVA SUBDIVISION
D.O.T.#174 924K

1	06-09-08
INSTALL HALF BLOCK SYSTEM FROM TURNER TO PARK, ILLINOIS. PHASE I PART I (MP. 29.50 TO MP. 25.54) AFE #88114	JJL /CTC/MDF

UNION PACIFIC
QUALITY PRODUCTIVITY SAFETY
SIGNAL DESIGN

DES:	CTC
DIG:	CTC
CHK:	JJL
A.F.E.	88114
ID= GEN2502.17X	

UNION PACIFIC RAILROAD

CHICAGO, ILLINOIS TO
CLINTON, IOWA
C.T.C. CIRCUITS

Office of Sr AVP Engineering - Signal/TCO Omaha, Nebraska

DATE	06-09-08
SHEET	17
DWG	25.02
	GEN

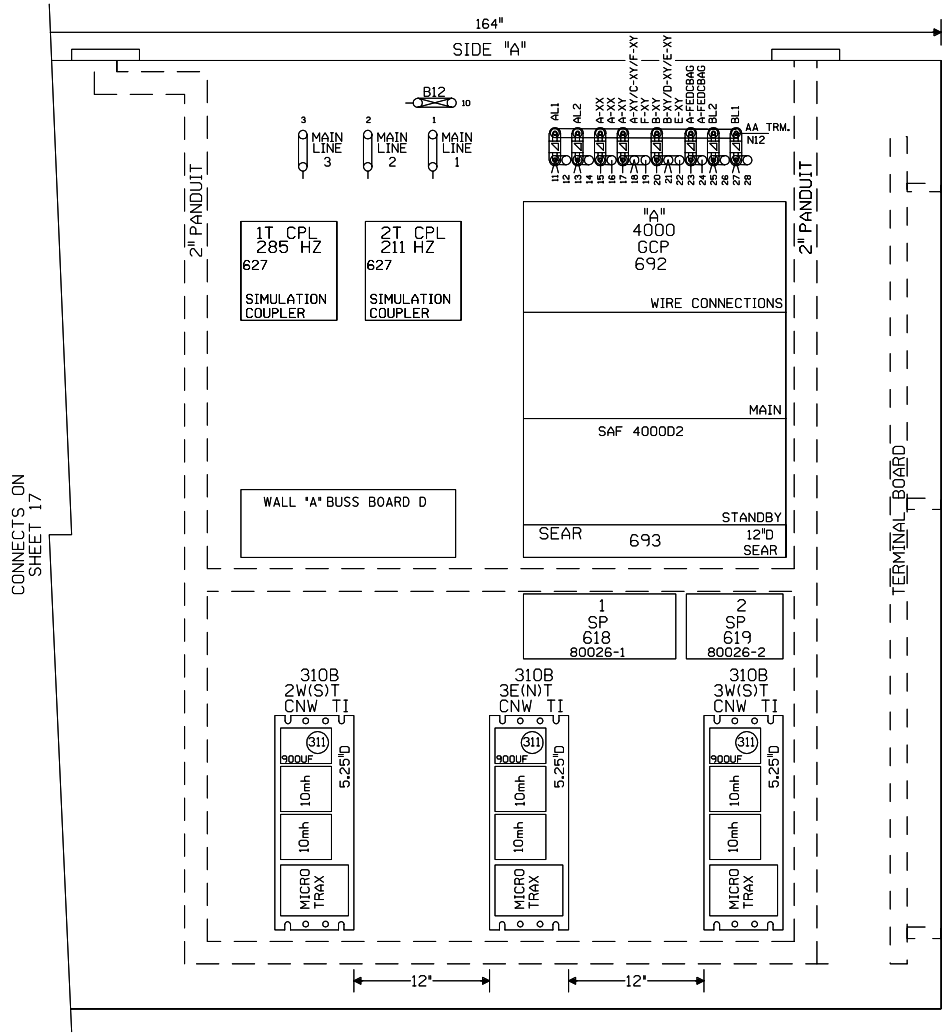

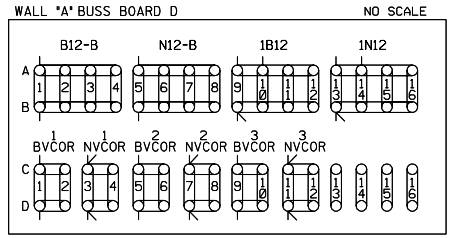

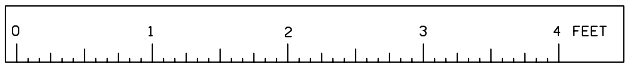

SCALE: 1.5 INCHES = 1 FOOT

NEW SHEET
WHEATON, ILLINOIS
WEST STREET
M.P. 25.02
GENEVA SUBDIVISION
D.O.T.#174 924K

1	06-09-08
INSTALL HALF BLOCK SYSTEM FROM TURNER TO PARK, ILLINOIS. PHASE I PART I (MP. 29.50 TO MP. 25.54) AFE #88114	
	JJL
/	/CTC/MDF

UNION PACIFIC
QUALITY PRODUCTIVITY SAFETY
SIGNAL DESIGN

DES:	CTC
DIG:	CTC
CHK:	JJL
A.F.E.	88114
ID= GEN2502.18X	

UNION PACIFIC RAILROAD

CHICAGO, ILLINOIS TO
CLINTON, IOWA
C.T.C. CIRCUITS

Office of Sr.AVP Engineering - Signal/TCO Omaha, Nebraska

DATE	06-09-08
SHEET	18
DWG	25.02
	GEN

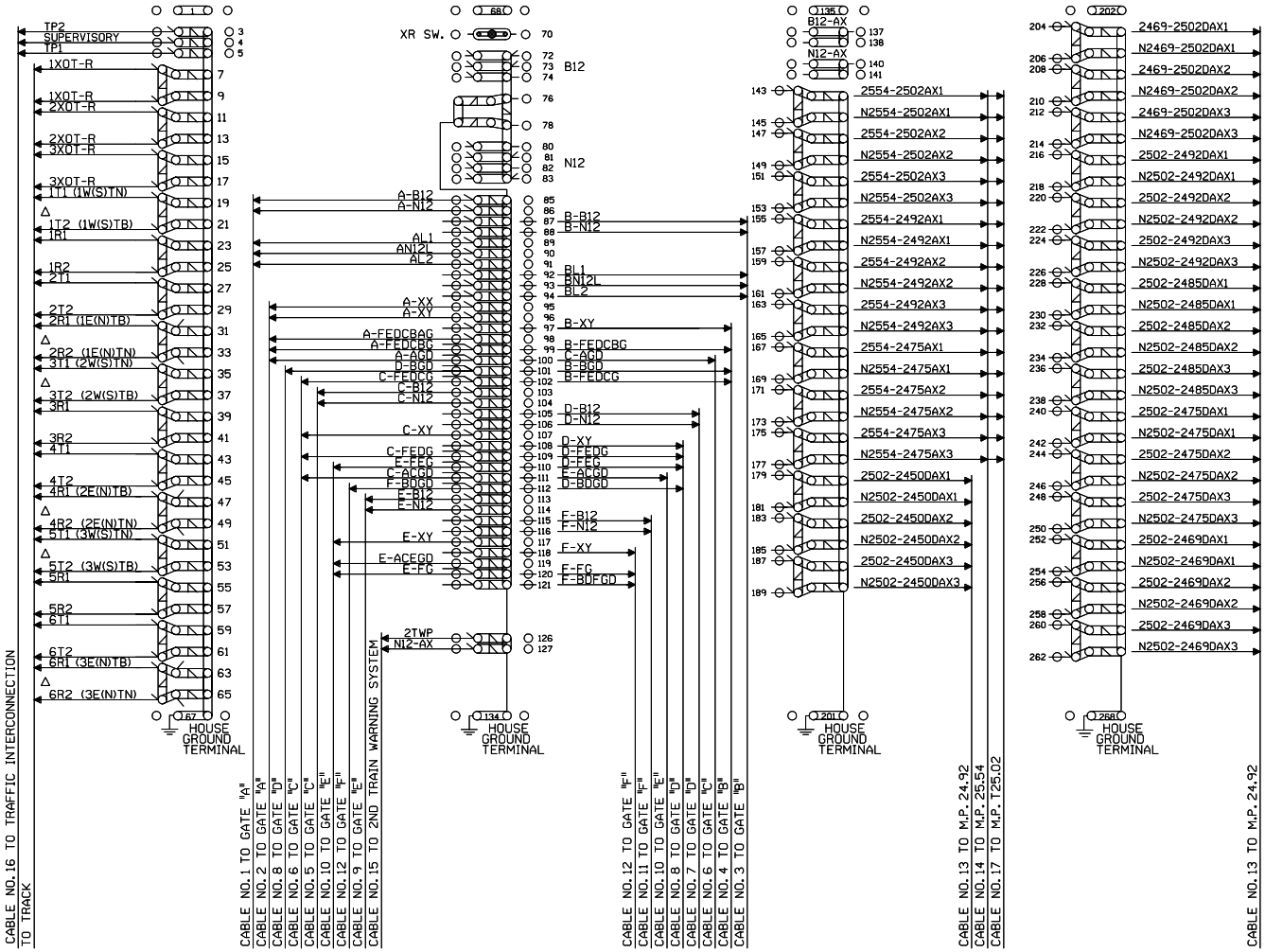

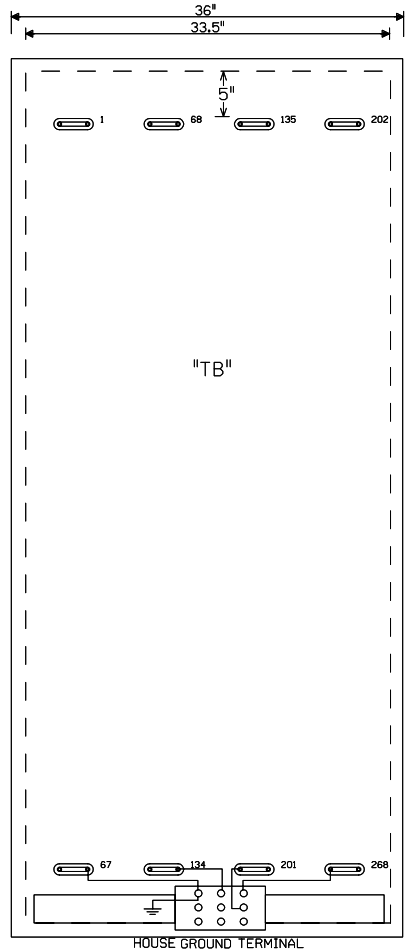

SEE SIGNAL STANDARD
DRAWING 846120UP FOR
HOUSE GROUNDING SCHEME

△ FIELD ENSURE PROPER TRACK POLARITY AND "AC" ACCORDINGLY

NEW SHEET
WHEATON, ILLINOIS
WEST STREET
M.P. 25.02
GENEVA SUBDIVISION
D.O.T.#174 924K

1 06-09-08
INSTALL HALF BLOCK SYSTEM FROM TURNER TO PARK, ILLINOIS.
PHASE 1 PART I
(MP. 29.50 TO MP. 25.54)
AFE #88114
JJL
/ /CTC/MDF

UNION PACIFIC
SAFETY QUALITY PRODUCTIVITY
SIGNAL DESIGN

DES:	CTC
DIG:	CTC
CHK:	JJL
A.F.E.	88114
ID= GEN2502.19X	

UNION PACIFIC RAILROAD

CHICAGO, ILLINOIS TO
CLINTON, IOWA
C.T.C. CIRCUITS

Office of Sr AVP Engineering - Signal/TCO Omaha, Nebraska

DATE	06-09-08
SHEET	19
DWG	25.02
	GEN

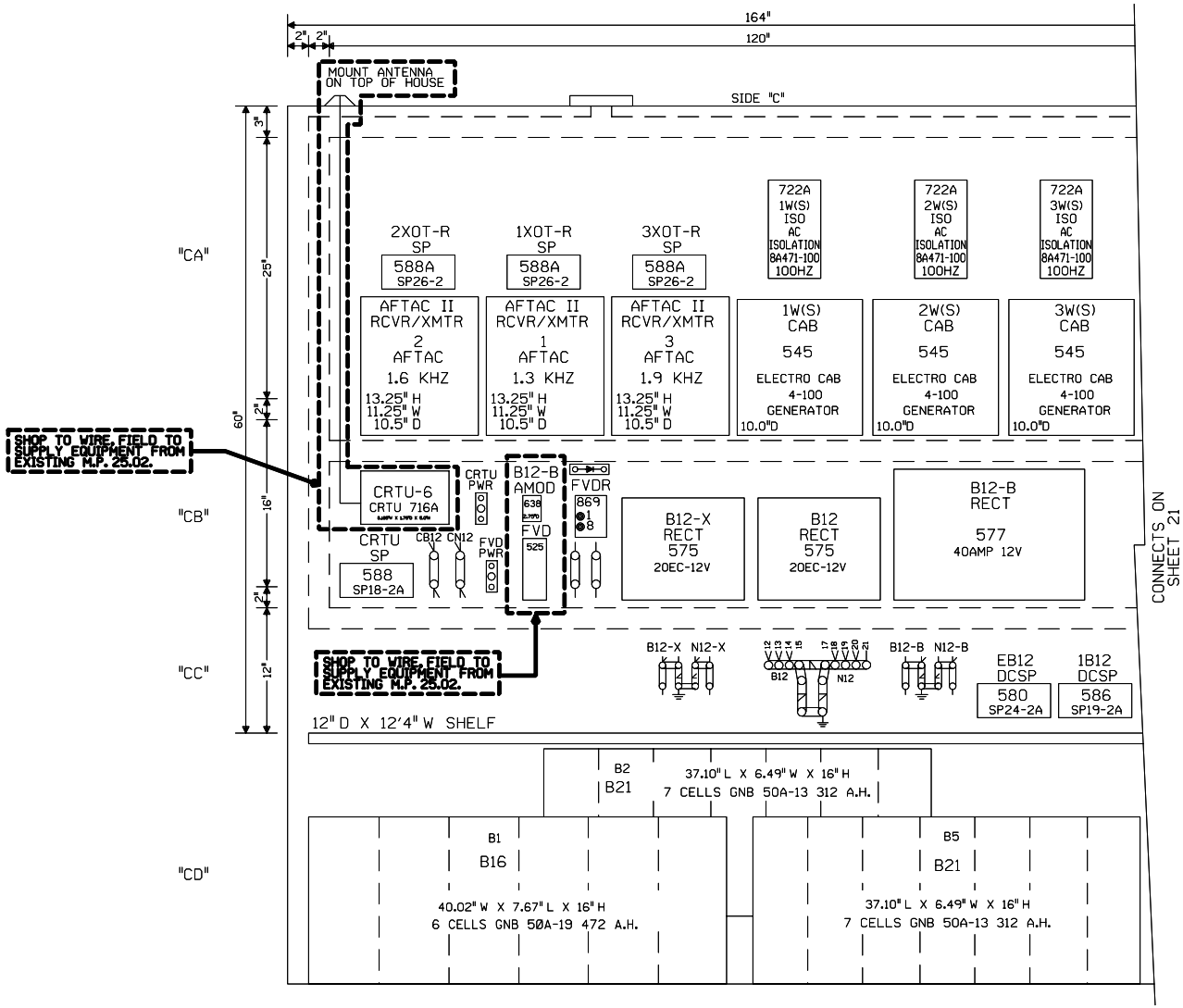

0 1 2 3 4 FEET

SCALE: 1.5 INCHES = 1 FOOT

NEW SHEET
WHEATON, ILLINOIS
WEST STREET
M.P. 25.02
GENEVA SUBDIVISION
D.O.T.#174 924K

1	06-09-08
INSTALL HALF BLOCK SYSTEM FROM TURNER TO PARK, ILLINOIS. PHASE I PART I. (MP. 29.50 TO MP. 25.54) AFE #88114	JJL / /CTC/MDF

UNION PACIFIC
QUALITY PRODUCTIVITY SAFETY
SIGNAL DESIGN

DES:	CTC
DIG:	CTC
CHK:	JJL
A.F.E.	88114
ID= GEN2502.20X	

UNION PACIFIC RAILROAD

CHICAGO, ILLINOIS TO
CLINTON, IOWA
C.T.C. CIRCUITS

Office of Sr.AVP Engineering - Signal/TCO Omaha, Nebraska

DATE	06-09-08
SHEET	20
DWG	25.02
	GEN

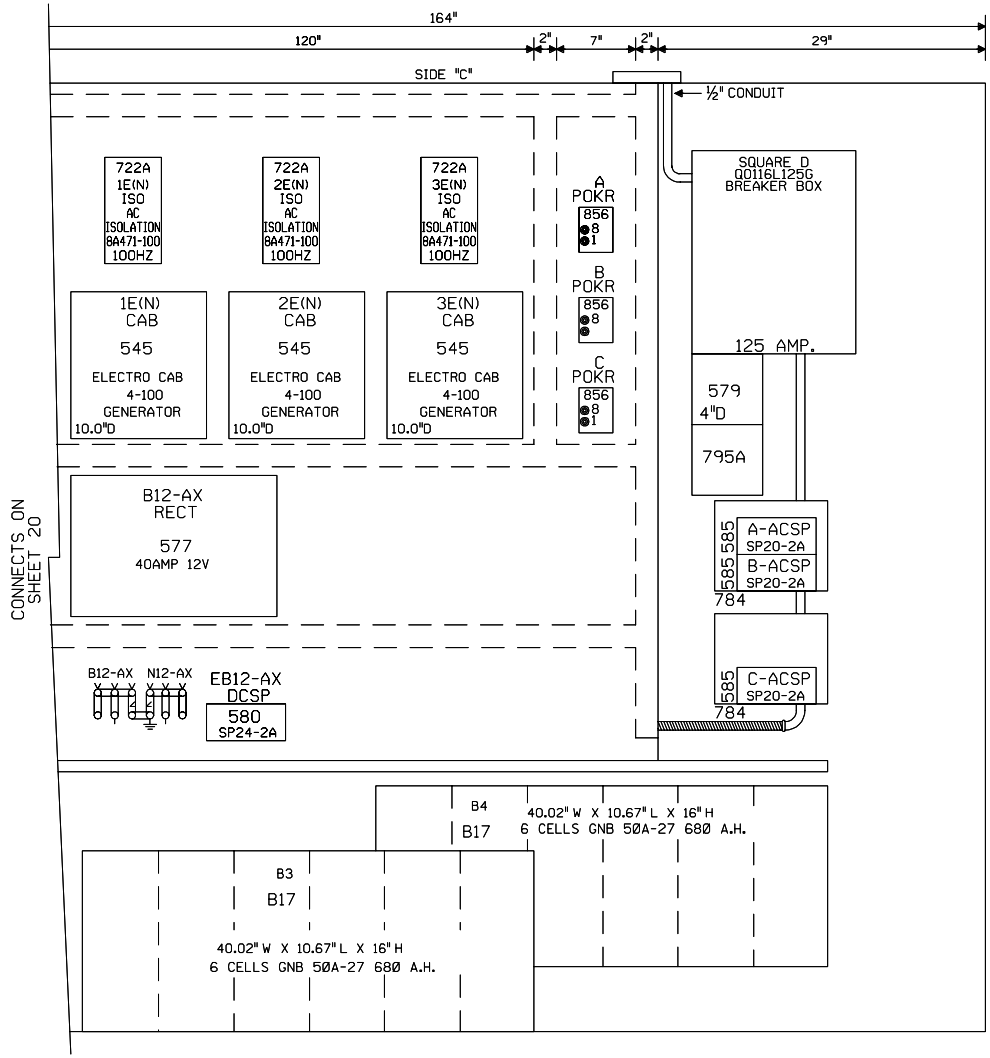

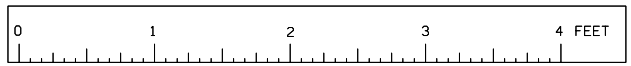

SCALE: 1.5 INCHES = 1 FOOT

NEW SHEET
WHEATON, ILLINOIS
WEST STREET
M.P. 25.02
GENEVA SUBDIVISION
D.O.T.#174 924K

1	06-09-08
INSTALL HALF BLOCK SYSTEM FROM TURNER TO PARK, ILLINOIS. PHASE I PART I. (MP. 29.50 TO MP. 25.54) AFE #88114	
	JJL
/	/CTC/MDF

UNION PACIFIC
QUALITY PRODUCTIVITY SAFETY
SIGNAL DESIGN

DES:	CTC
DIG:	CTC
CHK:	JJL
A.F.E.	88114
ID= GEN2502.21X	

UNION PACIFIC RAILROAD

CHICAGO, ILLINOIS TO
CLINTON, IOWA
C.T.C. CIRCUITS

Office of Sr.AVP Engineering - Signal/TCO Omaha, Nebraska

DATE	06-09-08
SHEET	21
DWG	25.02
	GEN

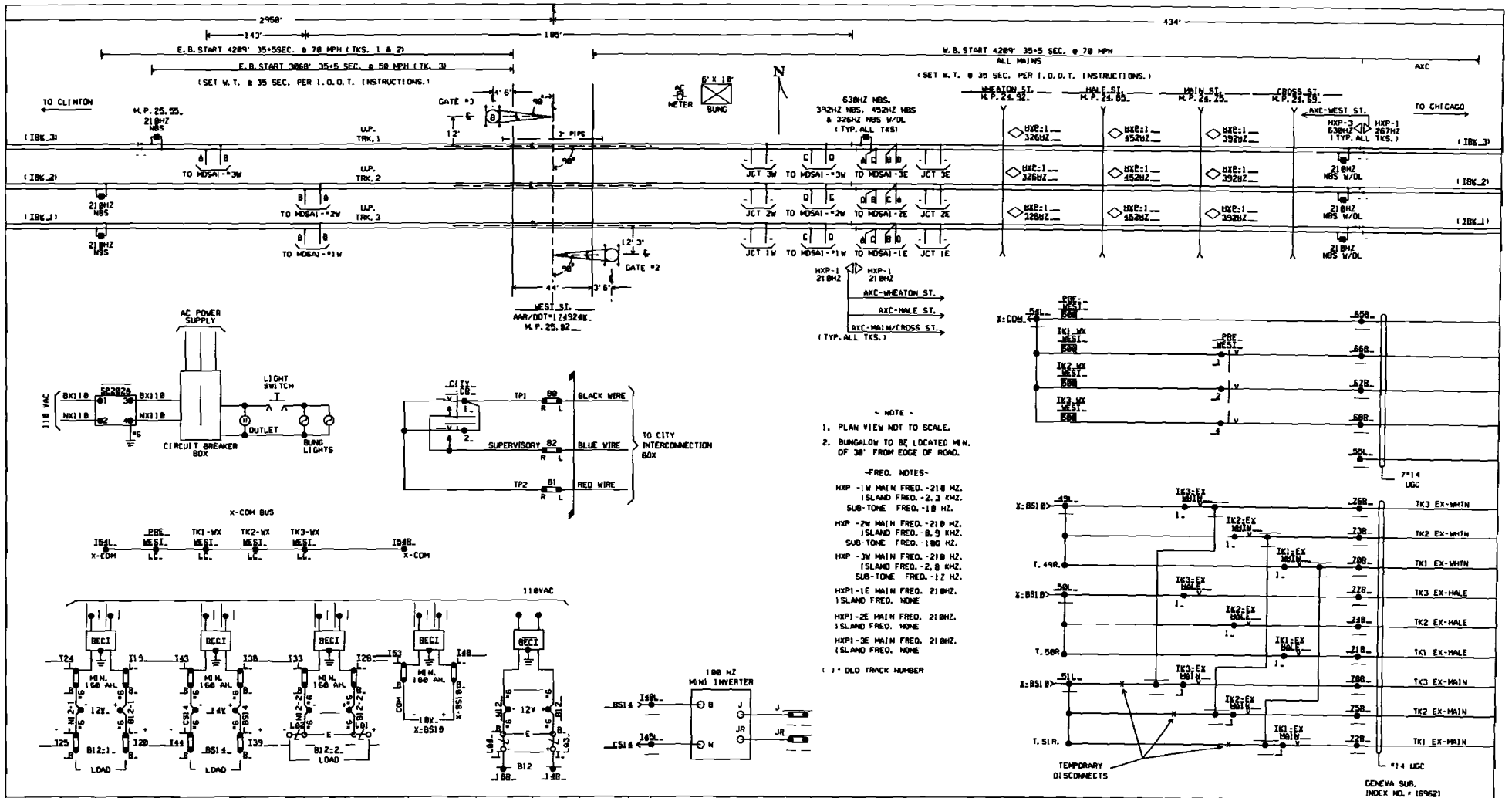

~ NOTE ~

1. PLAN VIEW NOT TO SCALE.
2. BUNGALOW TO BE LOCATED MIN. OF 30' FROM EDGE OF ROAD.

~FREQ. NOTES~

HXP -1W MAIN FREQ. -210 HZ.
ISLAND FREQ. -2.3 KHZ.
SUB-TONE FREQ. -10 HZ.

HXP -2W MAIN FREQ. -210 HZ.
ISLAND FREQ. -0.9 KHZ.
SUB-TONE FREQ. -100 HZ.

HXP -3W MAIN FREQ. -210 HZ.
ISLAND FREQ. -2.8 KHZ.
SUB-TONE FREQ. -12 HZ.

HXP1-1E MAIN FREQ. 210HZ.
ISLAND FREQ. NONE

HXP1-2E MAIN FREQ. 210HZ.
ISLAND FREQ. NONE

HXP1-3E MAIN FREQ. 210HZ.
ISLAND FREQ. NONE

( ) = DLO TRACK NUMBER

REVISIONS

DMN M.R.S. DATE: 09/02/87 FILE: 24-64-7	
07/15/88 M.R.S. REV. ACCT. INSTALL @TAC ON TRK 3	
8-24-93 REV. PER FC DATED 2-26-90 BY SW & RWT ACCT. OF JOINTS INSTALLED at WEST ST. & CROSSING CIRCUITS REARRANGED ACCORDINGLY. IN SERV 10/89	JEP
9-19-95 INSTALL BI-DIR SIGNALLING "HM" TO "WI" 11-7-94	TPZ/HAR/CDM
REV. 2-21-7 FC TO FILTER OPERATING BATTS. PER AC 2-3-97	JJD/CDL
REV. 2-26-98 CHANGE MAIN ST. TO START W/PREEMPT AND REVISED TO SHOW ALL LOCATIONS WITHIN XING APPROACHES ON XING FRT. SHT. PER U.P. STANDARDS 11-5-97	JNM PJW/WITT/MCP
4-6-98 REV. CHANGE WARNING TIMES FROM 25+5+10 TO 35+5 SEC. PER I.O.O.T. ORDER. 3-26-98	JJD/WITT/JNM
REV. 7-2-03 INSTALLED CRTU. W.O. #3327 REC. #11774 5-27-03	JJD/WITT/EMA
REV. 11-5-04 REMOVED CITY-CR CIRCUIT. REC. #12878	TJ/WITT
09-26-07 SJ REV. M.R.S. CHANGED JN CROSSINGS PER AC.	
12-13-08 REC. #14259 08-07-07	JJD/WSI/

MATCH TO: GEN02555.00C

UNION PACIFIC

QUALITY PRODUCTIVITY SAFETY

SIGNAL DESIGN

WEST ST.
WHEATON, IL.
M.P. 25.02

ID=GEN02502.00C

MATCH TO: GEN02492.00C

SYSTEMATIMEssssss

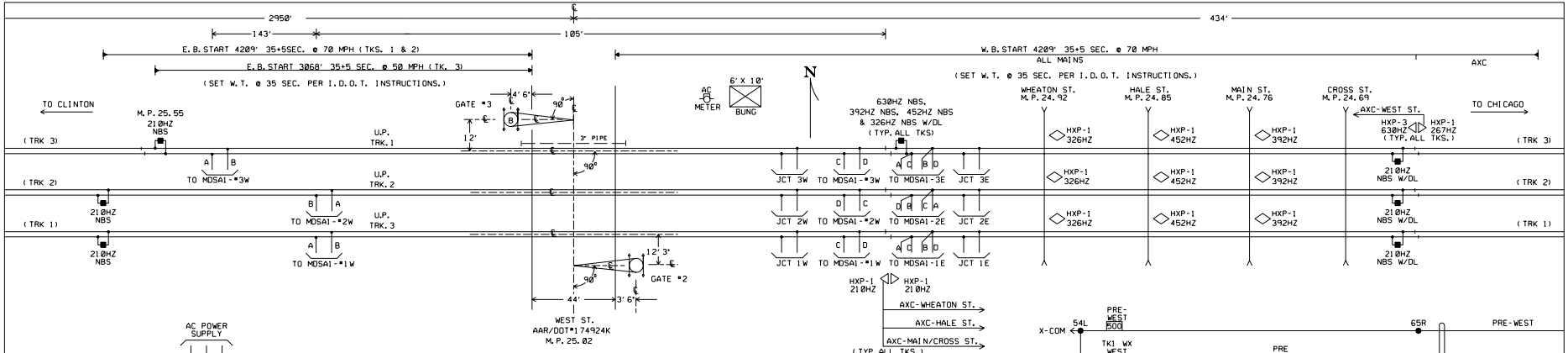

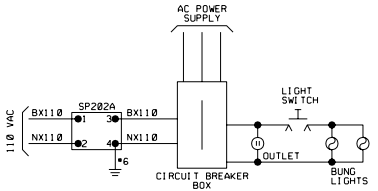

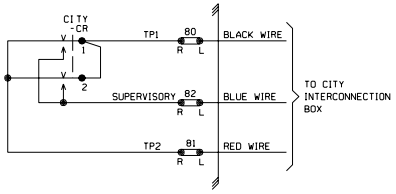

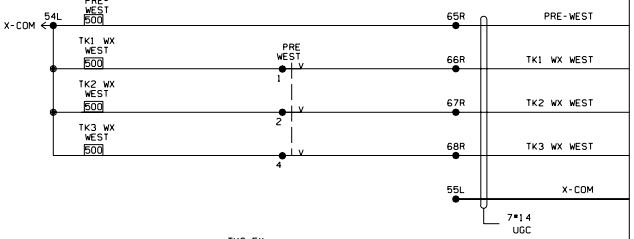

~ NOTE ~

1. PLAN VIEW NOT TO SCALE.
2. BUNGALOW TO BE LOCATED MIN. OF 30' FROM EDGE OF ROAD.

~FREQ. NOTES~

HXP -1W MAIN FREQ.-210 HZ.
ISLAND FREQ.-2.3 KHZ.
SUB-TONE FREQ.-10 HZ.

HXP -2W MAIN FREQ.-210 HZ.
ISLAND FREQ.-8.9 KHZ.
SUB-TONE FREQ.-108 HZ.

HXP -3W MAIN FREQ.-210 HZ.
ISLAND FREQ.-2.8 KHZ.
SUB-TONE FREQ.-17 HZ.

HXP1-1E MAIN FREQ. 210HZ.
ISLAND FREQ. NONE

HXP1-2E MAIN FREQ. 210HZ.
ISLAND FREQ. NONE

HXP1-3E MAIN FREQ. 210HZ.
ISLAND FREQ. NONE

( ) = OLD TRACK NUMBER

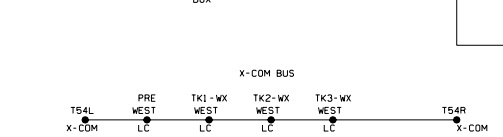

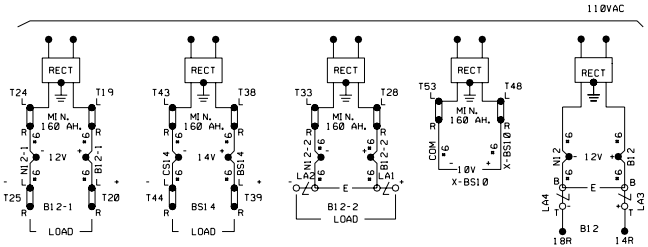

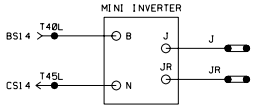

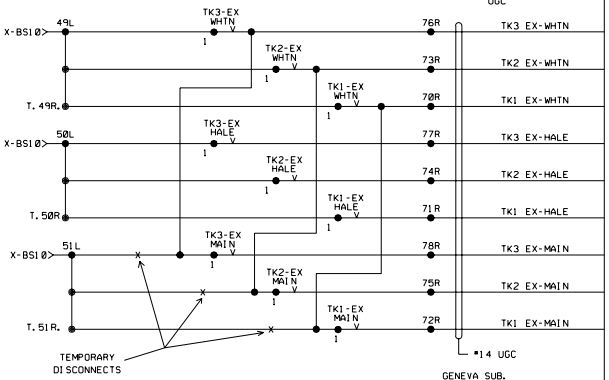

REVISIONS

DRN: M.R.S. DATE: 09/02/87 FILE# 24-64-7	
07/16/88 M.R.S. REV. ACCT. INSTALL AFTAC ON TRK 3	
8-24-93 JEP REV. PER FC DATED 2-28-90 BY SH & RWT ACCT. OF JOINTS INSTALLED AT WEST ST. & CROSSING CIRCUITS REARRANGED AS CORRECTLY INGLY. IN SERV 10/89	
REV. 9-15-95 INSTALL B1-DIR SIGNALLING *WHT TO *N1	
11-7-94 TPZ/HAR/CDM	
REV. 2-21-7 FC TO FILTER OPERATING BATTS. PER AC 2-3-97 JJO/CDL	
REV. 2-20-98 CHANGE MAIN ST. TO STATE W/PREEMPT AND REMOVE TO SHOW ALL LOCATIONS WITHIN XING APPROACHES ON XING FRI. SHT. PER U.P. STANDARDS 11-5-97 JNM PJA/WITT/RCP	
REV. 4-6-98 CHANGE WARNING TIMES FROM 25+10 TO 35+5 SEC. PER I.D.O.T ORDER. 3-30-98 JJO/WITT/JNM	
REV. 7-2-03 INSTALLED CRTU. WITH ATCS REC. #11779 5-23-03 JJO/WITT/WITT/EML	
REV. 11-9-04 UPDATED CITY-CR CIRCUIT. REV. 12-7-070 TJ/WITT	

UNION PACIFIC
QUALITY PRODUCTIVITY SAFETY
SIGNAL DESIGN

WEST ST.
WHEATON, IL.
M.P. 25.02

MATCH TO: GEN02555.00C

GEN02502.00C

MATCH TO: GEN02492.00C

SYSTEM&TIME&&&&&&

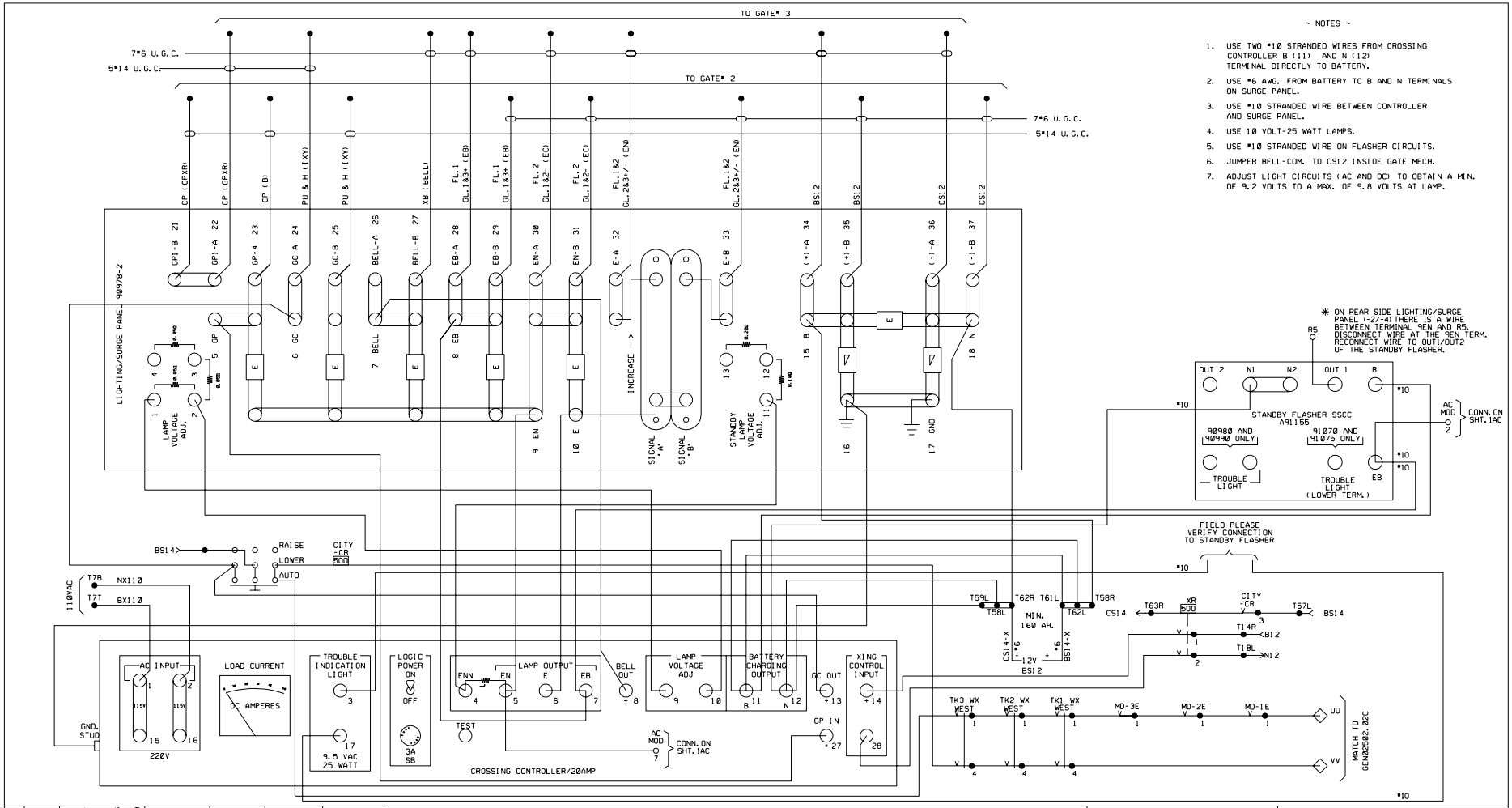

~ NOTES ~

1. USE TWO #10 STRANDED WIRES FROM CROSSING CONTROLLER B (11) AND N (12) TERMINAL DIRECTLY TO BATTERY.
2. USE #6 AWG. FROM BATTERY TO B AND N TERMINALS ON SURGE PANEL.
3. USE #10 STRANDED WIRE BETWEEN CONTROLLER AND SURGE PANEL.
4. USE 10 VOLT-25 WATT LAMPS.
5. USE #10 STRANDED WIRE ON FLASHER CIRCUITS.
6. JUMPER BELL-COM. TO CSI2 INSIDE GATE MECH.
7. ADJUST LIGHT CIRCUITS (AC AND DC) TO OBTAIN A MIN. OF 9.2 VOLTS TO A MAX. OF 9.8 VOLTS AT LAMP.

REVISIONS

DRWN : M.R.S.
DATE : 09/10/87
FILE #24-64-7

8-24-93 JEP
REV. PER FC DATED 2-28-90 BY SH & RWT ACCT. OF JOINTS INSTALLED AT WEST ST. & CROSSING CIRCUITS REARRANGED ACCORDIS INGLY. IN SERV 10/89

REV. 9-15-95
INSTALL BI-DIR SIGNALLING "NW" TO "NI"
11-7-94 TPZ/HAR/CDM

REV. 2-21-97
FC TO FILTER OPERATING BATTS.
PER AC 2-3-97 JJO/CDL

REV. 7-2-03
INSTALLED CRTU.
WO. #1327
REC. #11379
5-23-03 JJO/WITT/WITT/EML

REV. 2-11-05
CROSSING CONTROL CIRCUITS REVISED.
REC. #12434
1-10-05 TAH/WITT

UNION PACIFIC
QUALITY PRODUCTIVITY SAFETY
SIGNAL DESIGN

WEST ST.
WHEATON, IL.
M.P. 25.02

INDEX NO. =169622 GEN02502.01C

SYSTEM&TIME&&&&&&

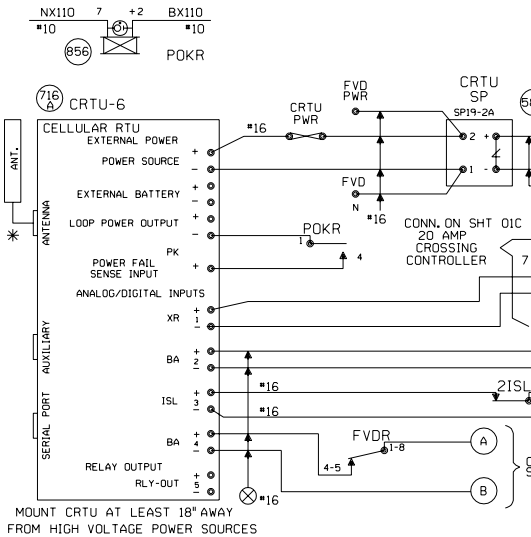

ANALOG MODULES CONVERT DC VOLTAGE TO A SQUARE WAVE. A WORKING ANALOG MODULE WILL HAVE 4.5VDC TO 8.0VDC BETWEEN 5VOUT+ AND 6VOUT-. WHERE, 0VOLTS = 0HZ OUT, 30VOLTS = 10KHZ OUT, AND 15VOLTS = 5KHZ OUT
MAKE SURE CRTU IS PROGRAMMED WITH CALIBRATION SETTINGS.

NOTES:
ALL DIODES 1N5060 OR 1N4004 UNLESS OTHERWISE NOTED.
✳ MOUNT ANTENNA ON TOP OF HOUSE.
ALL WIRES #18 UNLESS OTHERWISE NOTED.
ALL UNUSED 'NC' INPUTS MUST BE TIED HIGH TO BATTERY
ALL UNUSED ANALOG INPUTS MUST BE TIED HIGH TO BATTERY
ALL UNUSED 'NO' INPUTS MUST BE DISCONNECTED
NORMAL STATE FOR ANALOG CHANNELS IS EQUAL TO THE STORED NOMINAL VOLTAGE +120% OR -81%
CRTU FRONT PANEL DISPLAY CHART INDICATES NORMAL STATE
■ DIGITAL INPUT HIGH, OR POWER FAIL INPUT CLOSED □ DIGITAL INPUT LOW, OR POWER FAIL INPUT OPEN

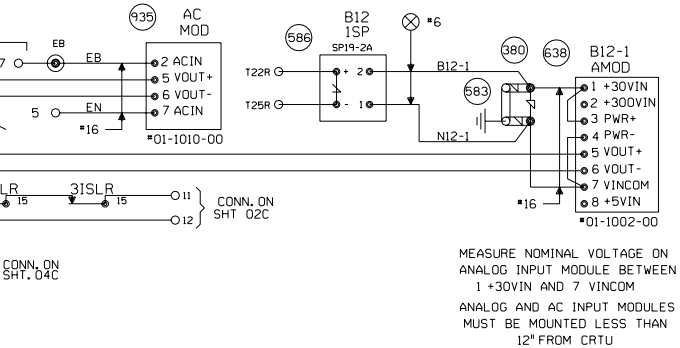

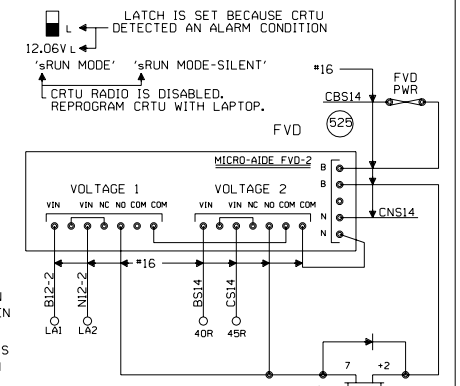

UNIT INSTALLATION AND SETUP

R.R. SITE ID WHERE: SSSS = 4 CHARACTER SUBDIVISION ID. FILL WITH PRECEDING ZEROS AS REQUIRED. THE MAIN TRACK SUBDIVISION ID* IS IN THE CURRENT TIMETABLE. INDUSTRIAL LEADS, LEASED, AND LEAD TRACKS LISTED WITHIN THE SUBDIVISION MAY HAVE THEIR OWN UNIQUE SUBDIVISION ID*. ALWAYS REFER TO CURRENT PRINTED COPY OF THE TIMETABLE.
LLLLLLLL = 8 CHARACTERS USE DOT* AT CROSSINGS, AND
WDLLLLLL = USE 'WD' THEN MP* AT WAYSIDE LOCATIONS.
EXAMPLE = 0785WD1801.5UT
HBLLLLLL = USE 'HB' THEN MP* AT HBD SITES.
EXAMPLE = 0100-HB55.62TX
THE MP* MUST USE A DECIMAL POINT TO SEPARATE NUMBERS. FILL WITH PRECEDING DASHES AS REQUIRED.
AA = 2 CHARACTER STATE NAME FOR ALL LOCATIONS. MUST BE 14 CHARACTERS LONG, NO SPACES ALLOWED.

SITE IDENTIFIER: SSSSLLLLLLLLAA	0001-174924KIL
OPERATION TO RESUME:	RUN
SIGNAL STRENGTH dBm	-63 dBm
CARRIER ID	00020
FIRMWARE VERSION	2.3.012
BOOT VERSION:	
CMM VERSION:	
SERIAL NUMBER	03-03092-2801
MIN ASSIGNMENT	
ESN: (MICROBURST ONLY)	
CONFIGURATION NET	MICROBURST
SILENCE INTERVAL	60 MINUTES
HEALTHCHECK INTERVAL	EVERY 2 DAYS
ALARM DEFER DELAY	240 MINUTES (4 HOURS)
SIGNAL STATUS	STRONG
SCADANET STATUS	GOOD
CALIBRATION CONSTANT CH1	
CALIBRATION CONSTANT CH2	000-09786
CALIBRATION CONSTANT CH3	
CALIBRATION CONSTANT CH4	
CALIBRATION CONSTANT PS	

FIELD PROVIDES: SAMPLED NOMINAL VOLTAGES, SCADANET STATUS CALIBRATION CONSTANTS, SERIAL NUMBER, AND SIGNAL STATUS.

CHANNEL SETUP - STANDARD CONFIGURATION 14:XR,Ba,ISL,Ba

CHANNEL NORMAL STATE	SENSE (NO/NC)	NAME FUNCTION	RECOGNITION DELAY SECONDS ACTIVE	RECOGNITION DELAY SECONDS NORMAL	RETURN TO NORMAL	REPORTING MODE	ALARM LINKED CHANNEL	ALARM LINKED CRITERIA	EVENT LOGGING ENABLED OPTIONS
POWER FAIL (CH5) ■	POWER FAIL DETECT NO	PF:n-PK AC POWER FAIL	7.200 ALARM	300 NORMAL	ENABLED	ALERT	DISABLED	N/A	
CH1 □ ■	DIGITAL INPUT NO	CH1-XR XR DOWN TO LONG	1.800 ALARM	1 NORMAL	ENABLED	ALERT	DISABLED	N/A	
CH2 STORED NOMINAL VOLTAGE	ANALOG INPUT N/A	CH2-Ba/V BATTERY MONITOR BATTERY LOW	600 ALARM	1200 NORMAL	ENABLED	ALERT W/UPDATE	DISABLED	N/A	
CH3 ■	DIGITAL INPUT NC	CH3-ISL ISLAND OCCUPIED DAX, PREEMPT WARNING TIME	1 ACTIVE	1 NORMAL	DISABLED	STATUS ONLY	DISABLED	N/A	DIGITAL EVENTS
CH4 STORED NOMINAL VOLTAGE	ANALOG INPUT N/A	CH4-Ba/V BATTERY MONITOR BATTERY LOW	600 ALARM	1200 NORMAL	ENABLED	ALERT W/UPDATE	DISABLED	N/A	CH1-XR CH3-ISL
POWER SOURCE (CH6)	ANALOG INPUT N/A	PS-Ba/V BATTERY MONITOR BATTERY LOW	600 ALARM	1200 NORMAL	ENABLED	ALERT W/UPDATE	DISABLED	N/A	

ANALOG CHANNEL	USEFUL RANGE VOLTS LOW	USEFUL RANGE VOLTS HIGH	DISPLAYED RANGE VOLTS LOW	DISPLAYED RANGE VOLTS HIGH	RELATIVE ALARM POINT LOW	RELATIVE ALARM POINT HIGH	ABSOLUTE ALARM POINT LOW	ABSOLUTE ALARM POINT HIGH	AUTOMATIC UPDATE INTERVAL	STORED NOMINAL VOLTAGE	SAMPLED NOMINAL VOLTAGE
CH2	0.0	30.00	0.0	30.00	81%	120%	10.0	29.0	14 DAYS	12.69	
CH4	0.0	30.00	0.0	30.00	81%	120%	10.0	29.0	14 DAYS	12.69	
POWER SOURCE	0.0	30.00	0.0	30.00	81%	120%	10.0	29.0	14 DAYS	12.69	

RELAY OUTPUT	NAME RLY-OUT	ACTIVE SET-UP-OPEN	NORMAL CLR-DN-CLOSE	PULSE DURATION	15 SECONDS	StdCfg Ver: 2.3.3 REV'D 9-20-02

MAINTENANCE OPERATIONS

TO START OR ABORT ANY PROCEDURE
1. PRESS THE 'CANCEL' BUTTON FIRST

WHEN RESPONDING TO A CALL, PUT THE CRTU IN THE 'SILENCE ALARMS' MODE
1. PRESS 'SELECT' AND THEN '+ ARROW' BUTTON UNTIL
   DISPLAY: ACTION?
   SILENCE ALARMS
2. PRESS THE 'SELECT' BUTTON TWICE
3. CORRECT PROBLEM AND SIMULATE NORMAL TRAIN MOVEMENT THROUGH THE LOCATION
4. EXAMINE EACH CHANNEL ON THE CRTU
5. PRESS THE '+/- ARROW' BUTTON
   VERIFY ALL CHANNELS INDICATE A NORMAL STATE
NORMAL STATES ARE ON THE CHANNEL SETUP CHART

CLEAR TIMERS, LATCHES AND SEND ALL NORMAL
1. DO STEPS #1 - #5 ABOVE, AND PRESS 'CANCEL'.
2. PRESS 'SELECT' AND THEN '- ARROW' BUTTON UNTIL
   DISPLAY: ACTION?
   SERVICE MODE
3. PRESS 'SELECT' AGAIN TO RESET TIMERS, AND IF
   DISPLAY: SERVICE MODE
   ALL NORMAL
4. PRESS 'SELECT' AGAIN TO CLEAR LATCHES, AND SEND ALL NORMAL. SKIP STEPS #5-#6.
5. HOWEVER, IF ALARMS ARE NOT CLEARED:
   DISPLAY: SERVICE MODE
   ALARMS PENDING/PRESENT
6. PRESS 'CANCEL', CORRECT PROBLEM AND REPEAT STEPS #2 THRU #5 UNTIL ALL NORMAL SENT.

TO CANCEL THE 'SILENCE ALARMS' MODE
1. PRESS 'SELECT' AND THEN '+ ARROW' BUTTON UNTIL
   DISPLAY: ACTION?
   CANCEL SILENCE
2. PRESS THE 'SELECT' BUTTON AGAIN

EXAMINE & SET BATTERY VOLTAGE NOMINAL VALUE
1. PRESS THE '+ ARROW' OR '- ARROW' BUTTON UNTIL THE DESIRED CHANNEL IS DISPLAYED.
   DISPLAY: PS-Ba:
   13.83V NORMAL
2. VERIFY THE DISPLAYED READING WITH A DIGITAL VOLTMETER
3. PRESS THE 'SELECT' BUTTON, AND THE CRTU DISPLAY WILL SWITCH BETWEEN CURRENT/SAVED NOMINAL VOLTAGE VALUES.
   DISPLAY: NOMINAL ON #6? (CURRENT)
   13.83
   DISPLAY: SAVED NOMINAL 6 (STORED)
   12.69
4. PRESS THE 'SELECT' BUTTON AND THE CURRENT OR 'NOMINAL ON' VALUE WILL BE SAMPLED AND STORED AS THE 'SAVED NOMINAL' VALUE
5. VERIFY THE 'NOMINAL ON' AND 'SAVED NOMINAL' VALUES ARE EQUIVALENT, REPEAT STEPS #1 THRU #3 & PRESS THE 'CANCEL' BUTTON.

SETUP FVD-2 REMOVE COVER PLATE
VERIFY FVD-2 DIP SWITCH SETTINGS

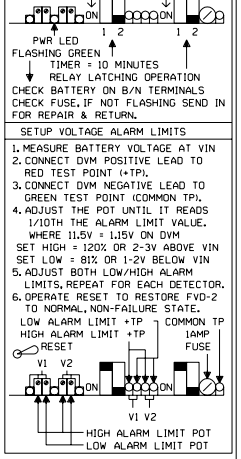

SETUP VOLTAGE ALARM LIMITS
1. MEASURE BATTERY VOLTAGE AT VIN
2. CONNECT DVM POSITIVE LEAD TO RED TEST POINT (+TP).
3. CONNECT DVM NEGATIVE LEAD TO GREEN TEST POINT (COMMON TP).
4. ADJUST THE POT UNTIL IT READS 1/10TH THE ALARM LIMIT VALUE.
   WHERE 11.5V = 1.15V ON DVM
   SET HIGH = 120% OR 2-3V ABOVE VIN
   SET LOW = 81% OR 1-2V BELOW VIN
5. ADJUST BOTH LOW/HIGH ALARM LIMITS, REPEAT FOR EACH DETECTOR.
6. OPERATE RESET TO RESTORE FVD-2 TO NORMAL, NON-FAILURE STATE.

WHEATON, ILLINOIS
WEST STREET
M.P. 25.02
GENEVA SUBDIVISION
D.O.T.#174 924K
PROJ.#

REV. 7-2-03 INSTALLED CRTU. REC. #11779 I.S. 5-23-03 JJO/WITT/WITT/EML	MODIFICATION LEVEL	UNION PACIFIC QUALITY PRODUCTIVITY SAFETY SIGNAL DESIGN	DES: WITT DIG: WITT CHK: EML A.F.E. 3327 ID: GEN02502.IAC

UNION PACIFIC RAILROAD
CHICAGO, ILLINOIS TO CLINTON, IOWA
C.T.C. CIRCUITS
OFFICE OF CHIEF ENG'R OMAHA NEBR.

DATE 11-01-01
SHEET 1AC
DWG 25.02
GEN

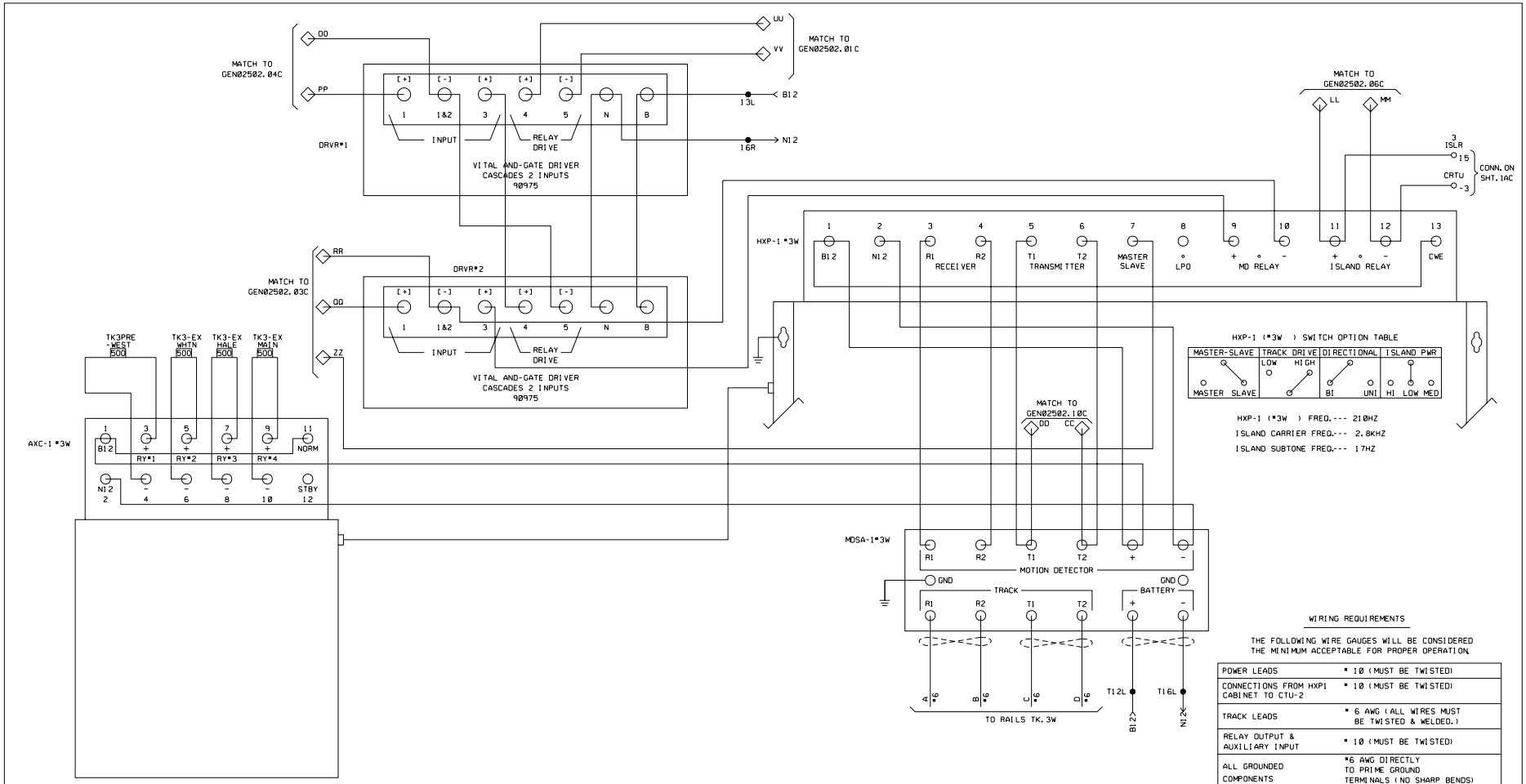

WIRING REQUIREMENTS

THE FOLLOWING WIRE GAUGES WILL BE CONSIDERED THE MINIMUM ACCEPTABLE FOR PROPER OPERATION.

POWER LEADS	# 10 (MUST BE TWISTED)
CONNECTIONS FROM HXP1 CABINET TO CTU-2	# 10 (MUST BE TWISTED)
TRACK LEADS	# 6 AWG (ALL WIRES MUST BE TWISTED & WELDED.)
RELAY OUTPUT & AUXILIARY INPUT	# 10 (MUST BE TWISTED)
ALL GROUNDED COMPONENTS	#6 AWG DIRECTLY TO PRIME GROUND TERMINALS (NO SHARP BENDS)

REVISIONS

DRWN : M.R.S.
DATE : 09/11/87
FILE #24-64-7

07/16/88 M.R.S.
REV. ACCT. INSTALL
AFTAC ON TRK 3

8-24-93 JEP
REV. PER FC DATED
2-28-90 BY SH & RWT
ACCT. OF JOINTS IN-
STALLED AT WEST ST.
& CROSSING CIRCUITS
REARRANGED ACCORD-
INGLY.IN SERV 10/89

REV. 9-15-95
INSTALL BI-DIR
SIGNALLING "HM" TO
"N1"
11-7-94 TPZ/HAR/CDM

REV. 2-21-97
FC TO FILTER
OPERATING BATTS.
PER AC 2-3-97
JJO/CDL

REV. 2-20-98
CHANGE MAIN ST. TO
START W/PREEMPT AND
REVISED TO SHOW ALL
LOCATIONS WITHIN
XING APPROACHES ON
XING FRT.SHT.PER
U.P.STANDARDS
11-5-97 JNM
PJA/WITT/RCP

REV. 7-2-03
INSTALLED CRTU.
W.O. #3327
REC. #11779
5-23-03
JJO/WITT/WITT/EML

UNION PACIFIC
QUALITY PRODUCTIVITY
SAFETY
SIGNAL DESIGN

WEST ST.
WHEATON, IL.
M.P. 25.02

GEN02502.02C

SYSTEM$TIME$$$$$$

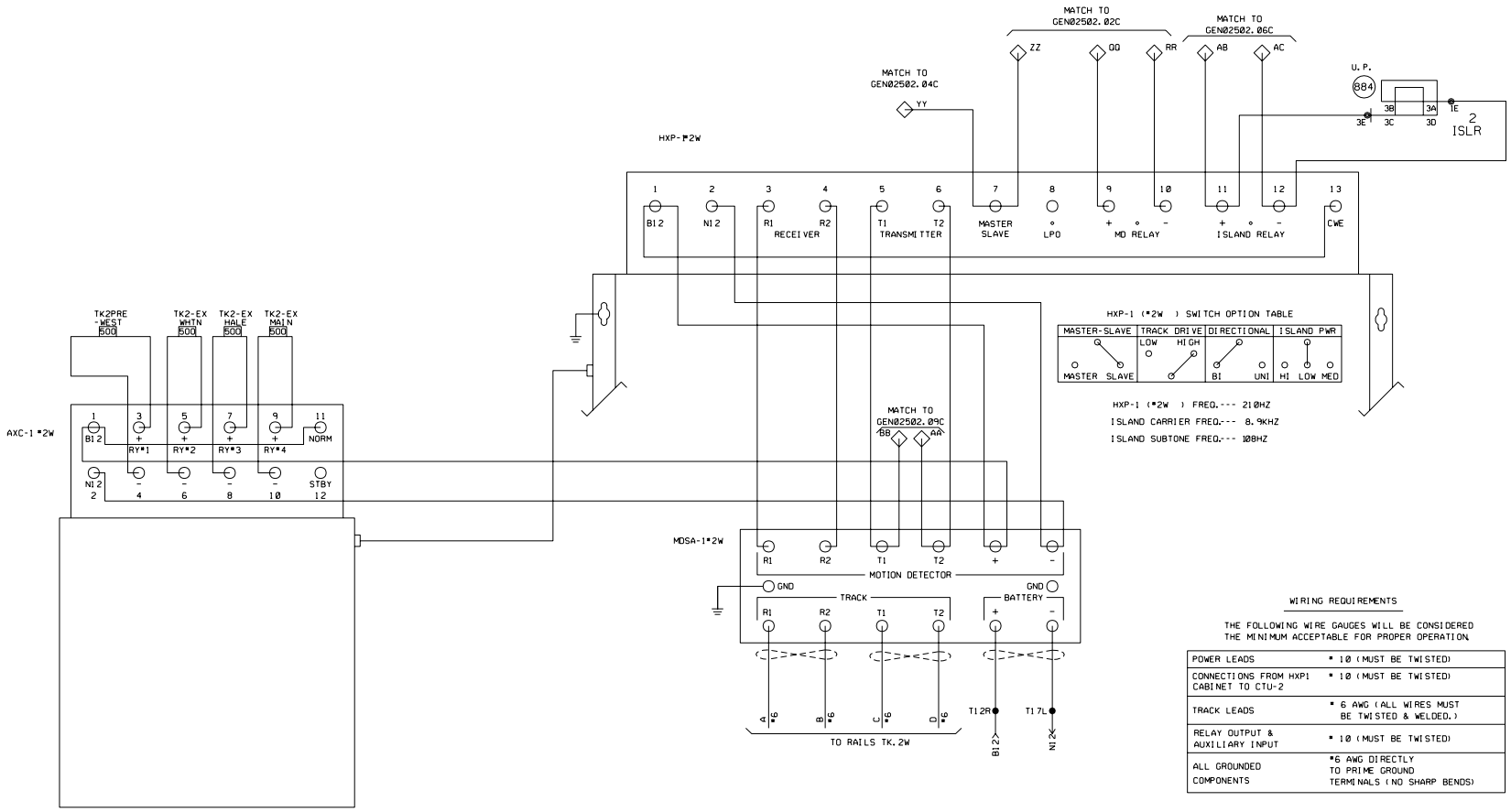

WIRING REQUIREMENTS

THE FOLLOWING WIRE GAUGES WILL BE CONSIDERED THE MINIMUM ACCEPTABLE FOR PROPER OPERATION.

POWER LEADS	* 10 (MUST BE TWISTED)
CONNECTIONS FROM HXP1 CABINET TO CTU-2	* 10 (MUST BE TWISTED)
TRACK LEADS	* 6 AWG (ALL WIRES MUST BE TWISTED & WELDED.)
RELAY OUTPUT & AUXILIARY INPUT	* 10 (MUST BE TWISTED)
ALL GROUNDED COMPONENTS	*6 AWG DIRECTLY TO PRIME GROUND TERMINALS (NO SHARP BENDS)

REVISIONS

DRWN : M.R.S.
DATE : 09/11/87
FILE *24-64-7

8-24-93 JEP
REV. PER FC DATED 2-28-90 BY SH & RWT ACCT. OF JOINTS INSTALLED AT WEST ST. & CROSSING CIRCUITS REARRANGED ACCORDINGLY.IN SERV 10/89

REV. 2-20-98
CHANGE MAIN ST. TO START W/PREEMPT AND REVISED TO SHOW ALL LOCATIONS WITHIN XING APPROACHES ON XING FRT.SHT.PER U.P.STANDARDS
11-5-97 JNM
PJA/WITT/RCP

REV.7-2-03
INSTALLED CRTU.
W.O. *3327
REC. *11779
5-23-03
JJO/WITT/WITT/EML

UNION PACIFIC
QUALITY PRODUCTIVITY SAFETY
SIGNAL DESIGN

WEST ST.
WHEATON, IL.
M.P. 25.02

GEN02502.03C

SYSTEM$TIME$$$$$$

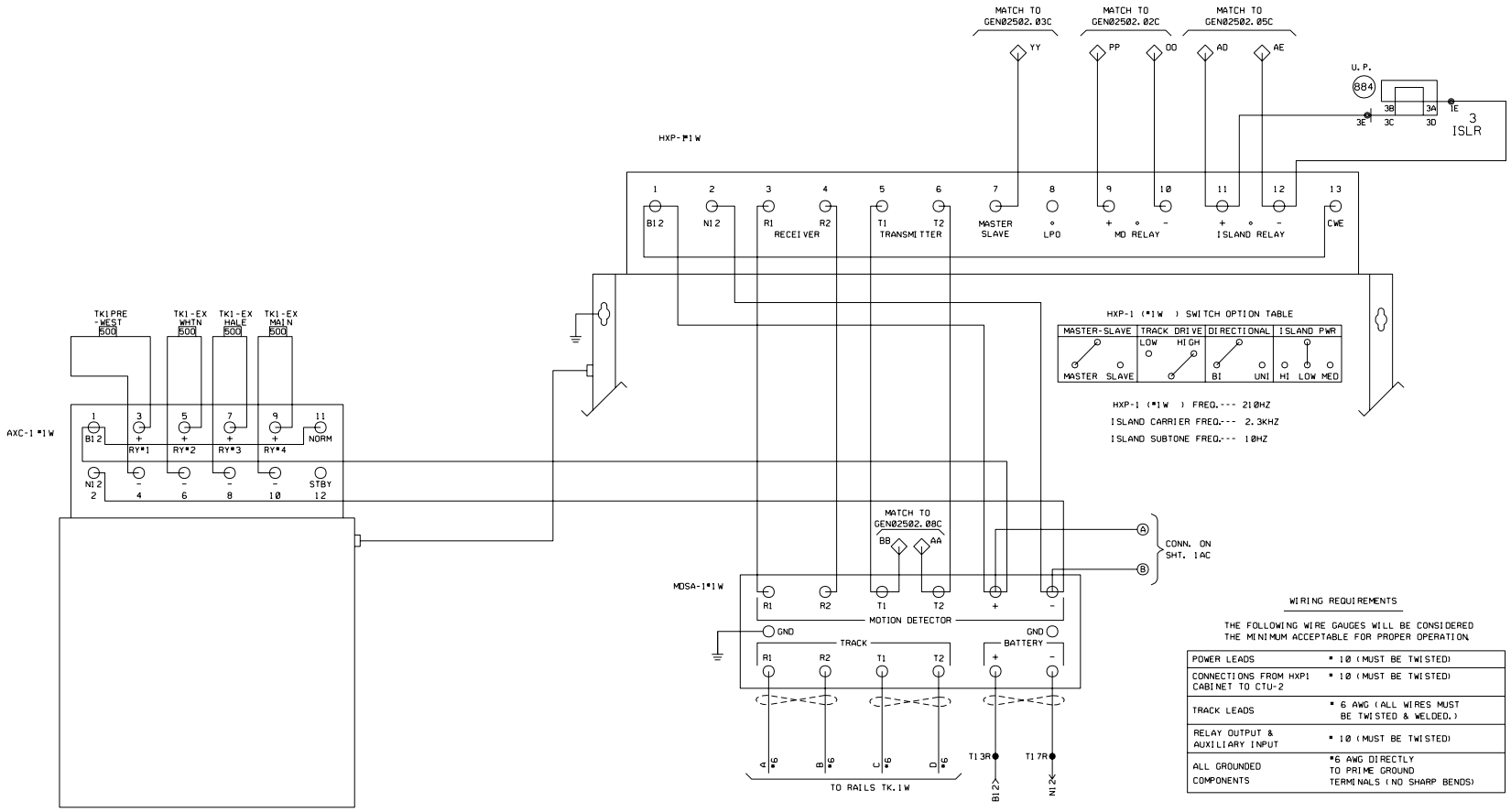

WIRING REQUIREMENTS

THE FOLLOWING WIRE GAUGES WILL BE CONSIDERED THE MINIMUM ACCEPTABLE FOR PROPER OPERATION.

POWER LEADS	* 10 (MUST BE TWISTED)
CONNECTIONS FROM HXP1 CABINET TO CTU-2	* 10 (MUST BE TWISTED)
TRACK LEADS	* 6 AWG (ALL WIRES MUST BE TWISTED & WELDED.)
RELAY OUTPUT & AUXILIARY INPUT	* 10 (MUST BE TWISTED)
ALL GROUNDED COMPONENTS	*6 AWG DIRECTLY TO PRIME GROUND TERMINALS (NO SHARP BENDS)

REVISIONS

DRWN : M.R.S.
DATE : 09/11/87
FILE *24-64-7

8-24-93 JEP
REV. PER FC DATED 2-28-90 BY SH & RWT ACCT. OF JOINTS INSTALLED AT WEST ST. & CROSSING CIRCUITS REARRANGED ACCORDINGLY.IN SERV 10/89

REV. 2-20-98
CHANGE MAIN ST. TO START W/PREEMPT AND REVISED TO SHOW ALL LOCATIONS WITHIN XING APPROACHES ON XING FRT.SHT.PER U.P.STANDARDS
11-5-97 JNM
PJA/WITT/RCP

REV.7-2-03
INSTALLED CRTU.
W.O. *3327
REC. *11779
5-23-03
JJO/WITT/WITT/EML

UNION PACIFIC
QUALITY PRODUCTIVITY SAFETY
SIGNAL DESIGN

WEST ST.
WHEATON, IL.
M.P. 25.02

GEN02502.04C

SYSTEM$TIME$$$$$$

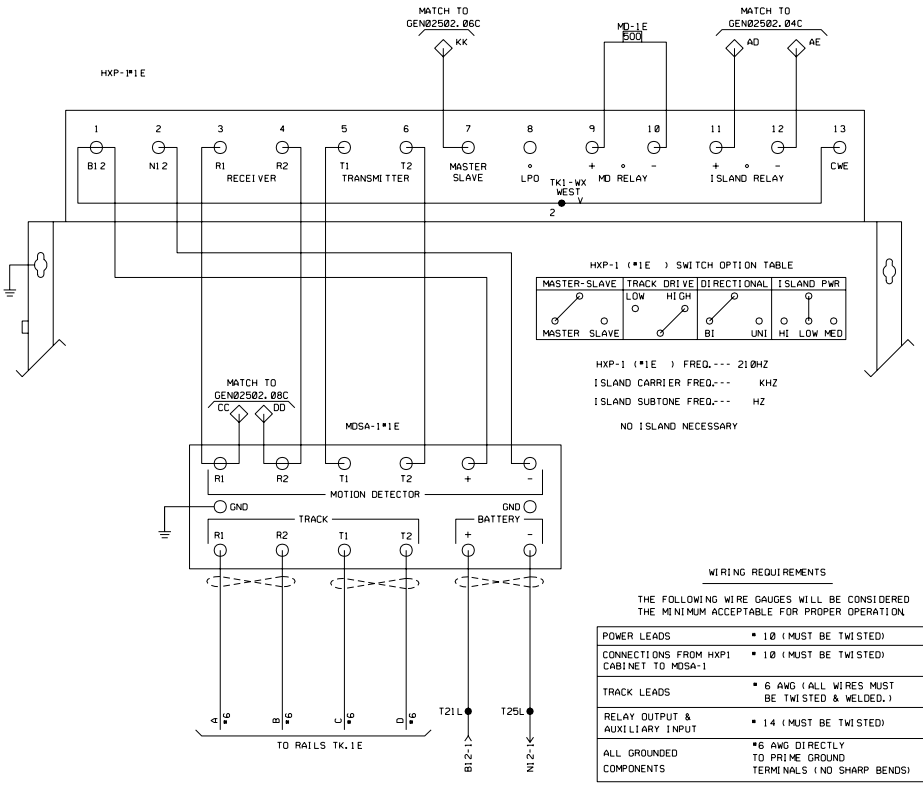

WIRING REQUIREMENTS

THE FOLLOWING WIRE GAUGES WILL BE CONSIDERED THE MINIMUM ACCEPTABLE FOR PROPER OPERATION.

POWER LEADS	* 10 (MUST BE TWISTED)
CONNECTIONS FROM HXP1 CABINET TO MDSA-1	* 10 (MUST BE TWISTED)
TRACK LEADS	* 6 AWG (ALL WIRES MUST BE TWISTED & WELDED.)
RELAY OUTPUT & AUXILIARY INPUT	* 14 (MUST BE TWISTED)
ALL GROUNDED COMPONENTS	*6 AWG DIRECTLY TO PRIME GROUND TERMINALS (NO SHARP BENDS)

REVISIONS

DRAWN BY A.COX
DATE: 6-13-89
APE: 87893
FILE:

8-24-93 JEP
REV. PER FC DATED 2-28-90 BY SH & RWT ACCT. OF JOINTS INSTALLED AT WEST ST & CROSSING CIRCUITS REARRANGED ACCORDINGLY. IN SERV 10/89

REV. 2-20-98
CHANGE MAIN ST. TO START W/PREEMPT AND REVISED TO SHOW ALL LOCATIONS WITHIN XING APPROACHES ON XING FRT. SHT. PER U.P. STANDARDS
11-15-97 JNM
PJA/WITT/RCP

UNION PACIFIC
QUALITY PRODUCTIVITY SAFETY
SIGNAL DESIGN

WEST ST.
WHEATON, IL.
M.P. 25.02

GEN02502.05C

SYSTEM&TIME&&&&&&

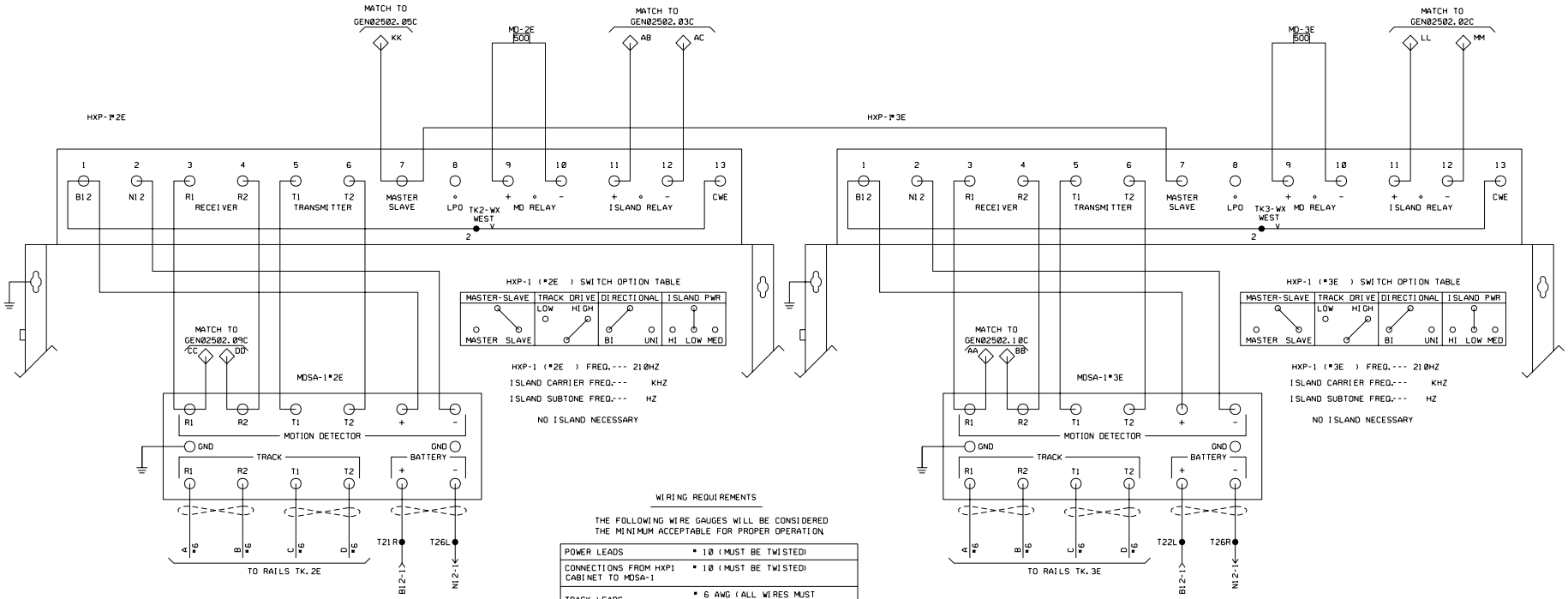

REVISIONS

DRAWN BY A.COX
DATE: 6-13-89
APE: 87893
FILE:

8-24-93 JEP
REV. PER FC DATED 2-28-90 BY SH & RWT ACCT. OF JOINTS INSTALLED AT WEST ST & CROSSING CIRCUITS REARRANGED ACCORDINGLY. IN SERV 10/89

REV. 2-20-98
CHANGE MAIN ST. TO START W/PREEMPT AND REVISED TO SHOW ALL LOCATIONS WITHIN XING APPROACHES ON XING FRT. SHT. PER U.P. STANDARDS
11-13-97 JNM
PJA/WITT/RCP

UNION PACIFIC
QUALITY PRODUCTIVITY SAFETY
SIGNAL DESIGN

WEST ST.
WHEATON, IL.
M.P. 25.02

GEN02502.06C

SYSTEM&TIME&&&&&&

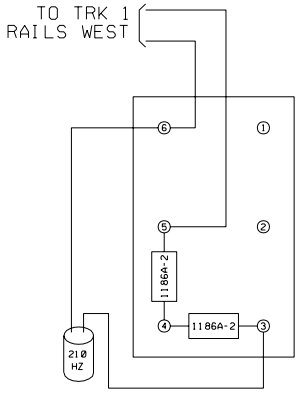

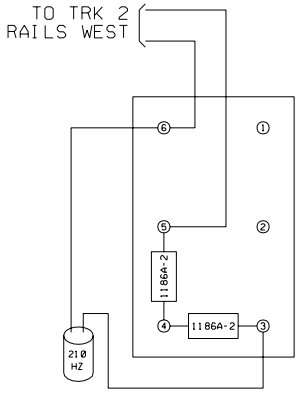

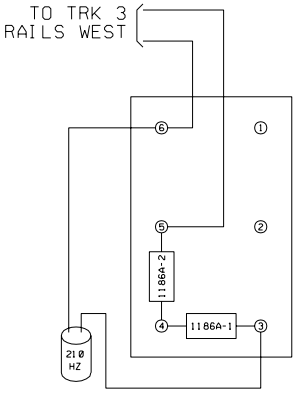

~NOTE~

ALL TERMINATIONS TO BE NBS-2'S

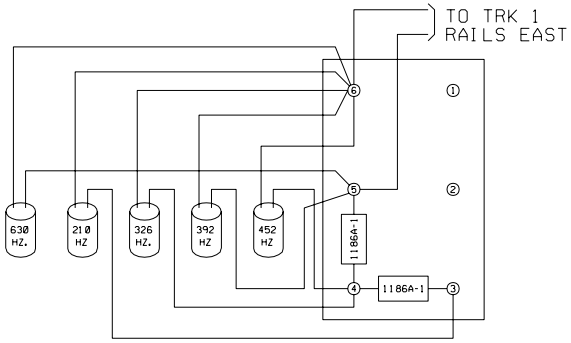

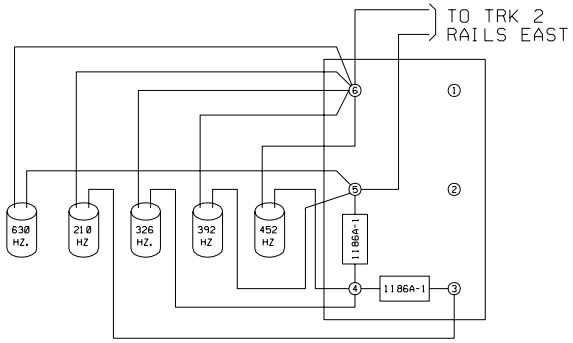

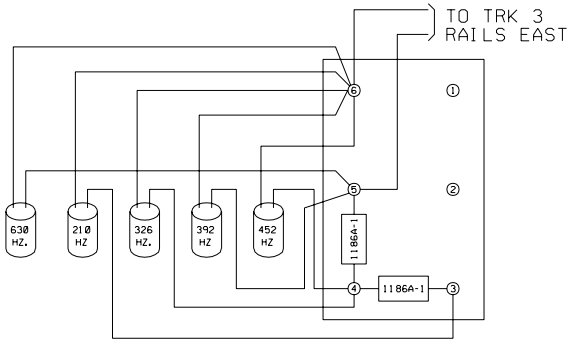

REVISIONS

DRAWN BY A.COX
DATE: 6-13-89
APE: 87893
FILE:

8-24-93 JEP
REV. PER FC DATED
2-28-90 BY SH & RWT
ACCT. OF JOINTS IN-
STALLED AT WEST ST.
& CROSSING CIRCUITS
REARRANGED ACCORD-
INGLY. IN SERV 10/89

2 REV. 11-19-96
INSTALL 1000' DUMMY
LOAD FOR HALE ST.

TC BD/VRS

REV. 2-20-98
CHANGE MAIN ST. TO
WEST WHEATON AND
REVISED TO SHOW ALL
LOCATIONS WITHIN
XING APPROACHES ON
XING FRT. SHT. PER
U.P. STANDARDS
11-5-97 JNM
PJA/WTT/RCP

UNION PACIFIC

QUALITY PRODUCTIVITY SAFETY

SIGNAL DESIGN

WEST ST.
WHEATON, IL.
M.P. 25.02

GEN02502.07C

SYSTEM&TIME&&&&&&

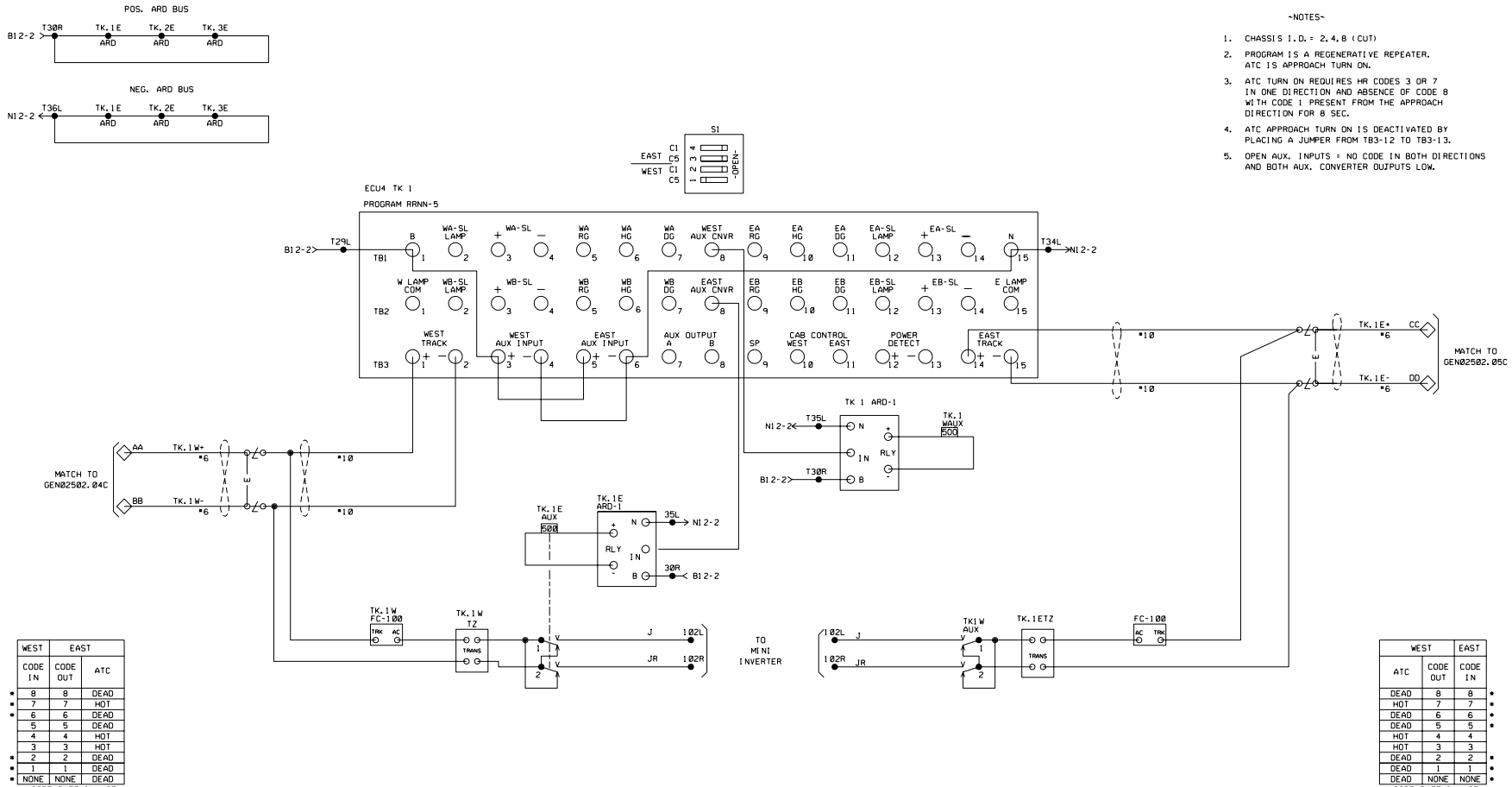

~NOTES~

1. CHASSIS I.D.= 2.4.8 (CUT)
2. PROGRAM IS A REGENERATIVE REPEATER. ATC IS APPROACH TURN ON.
3. ATC TURN ON REQUIRES HR CODES 3 OR 7 IN ONE DIRECTION AND ABSENCE OF CODE 8 WITH CODE 1 PRESENT FROM THE APPROACH DIRECTION FOR 8 SEC.
4. ATC APPROACH TURN ON IS DEACTIVATED BY PLACING A JUMPER FROM TB3-12 TO TB3-13.
5. OPEN AUX. INPUTS = NO CODE IN BOTH DIRECTIONS AND BOTH AUX. CONVERTER OUTPUTS LOW.

WEST	EAST	
CODE IN	CODE OUT	ATC
8	8	DEAD
7	7	HOT
6	6	DEAD
5	5	DEAD
4	4	HOT
3	3	HOT
2	2	DEAD
1	1	DEAD
NONE	NONE	DEAD

* CODE RATE IN USE

WEST		EAST
ATC	CODE OUT	CODE IN
DEAD	8	8
HOT	7	7
DEAD	6	6
DEAD	5	5
HOT	4	4
HOT	3	3
DEAD	2	2
DEAD	1	1
DEAD	NONE	NONE

* CODE RATE IN USE

REVISIONS

DRAWN BY A.COX
DATE: 6-22-89
APE: 87893
FILE:

8-24-93 JEP
REV. PER FC DATED 2-28-90 BY SH & RWT ACCT. OF JOINTS IN-STALLED AT WEST ST & CROSSING CIRCUITS REARRANGED ACCORD-INGLY. IN SERV 10/89

REV. 9-15-95
INSTALL BI-DIR SIGNALLING "NM" TO "NI"
11-7-94 TPZ/HAR/CDM

REV. 7-2-03
INSTALLED CRTU.
WO. #3327
REC. #11779
5-23-03
JJO/WITT/WITT/EML

UNION PACIFIC
QUALITY PRODUCTIVITY SAFETY
SIGNAL DESIGN

WEST ST.
WHEATON, IL.
M.P. 25.02

GEN02502.08C

SYSTEM&TIME&&&&&&

~NOTES~

1. CHASSIS I.D.= 2.4.8 (CUT)
2. PROGRAM IS A REGENERATIVE REPEATER. ATC IS APPROACH TURN ON.
3. ATC TURN ON REQUIRES HR CODES 3 OR 7 IN ONE DIRECTION AND ABSENCE OF CODE 8 WITH CODE 1 PRESENT FROM THE APPROACH DIRECTION FOR 8 SEC.
4. ATC APPROACH TURN ON IS DEACTIVATED BY PLACING A JUMPER FROM TB3-12 TO TB3-13.
5. OPEN AUX. INPUTS = NO CODE IN BOTH DIRECTIONS AND BOTH AUX. CONVERTER OUTPUTS LOW.

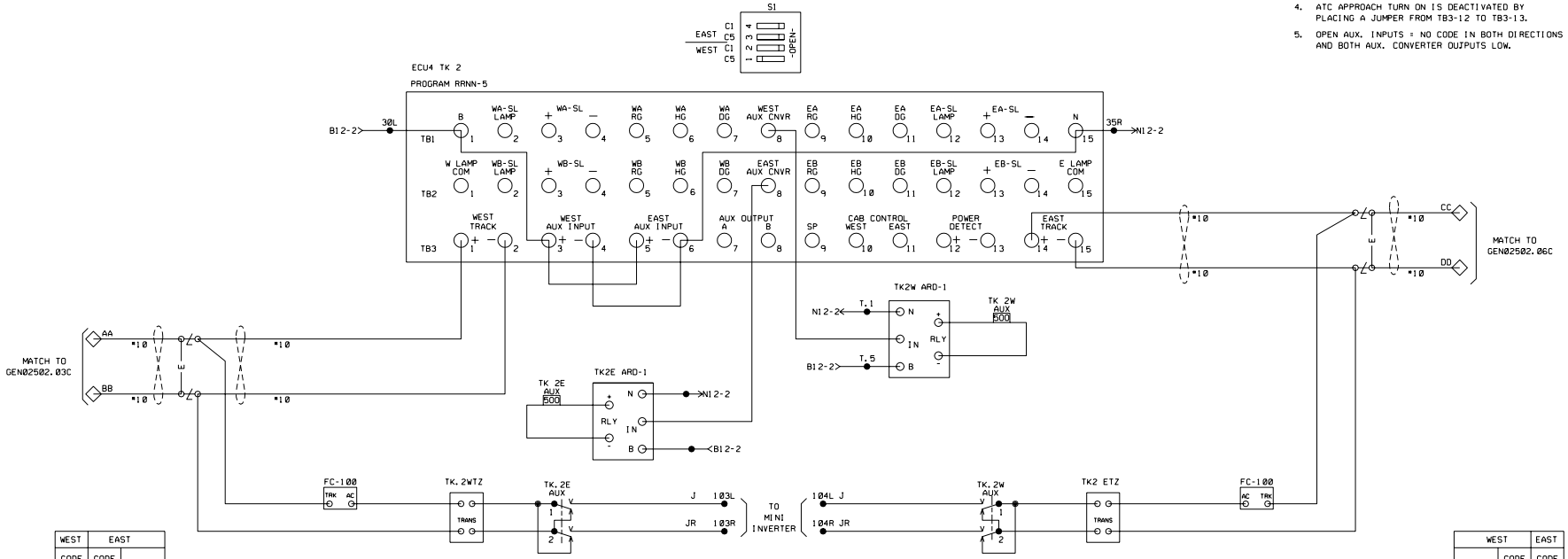

WEST	EAST	
CODE IN	CODE OUT	ATC
8	8	DEAD
7	7	HOT
6	6	DEAD
5	5	DEAD
4	4	HOT
3	3	HOT
2	2	DEAD
1	1	DEAD
NONE	NONE	DEAD

* CODE RATE IN USE

WEST		EAST
ATC	CODE OUT	CODE IN
DEAD	8	8
HOT	7	7
DEAD	6	6
DEAD	5	5
HOT	4	4
HOT	3	3
DEAD	2	2
DEAD	1	1
DEAD	NONE	NONE

* CODE RATE IN USE

REVISIONS

DRAWN BY A.COX
DATE: 6-22-89
APE: 87893
FILE:

8-24-93 JEP
REV. PER FC DATED 2-28-90 BY SH & RWT ACCT. OF JOINTS IN-STALLED AT WEST ST & CROSSING CIRCUITS REARRANGED ACCORD-INGLY. IN SERV 10/89

REV. 9-15-95
INSTALL BI-DIR SIGNALLING "MM" TO "NI"
11-7-94 TPZ/HAR/CDM

REV. 7-2-03
INSTALLED CRTU.
W.O. #3327
REC. #11779
5-23-03
JJD/WITT/WITT/EML

UNION PACIFIC
QUALITY PRODUCTIVITY SAFETY
SIGNAL DESIGN

WEST ST.
WHEATON, IL.
M.P25.02

GEN02502.09C

SYSTEM&TIME&&&&&&

~NOTES~

1. CHASSIS I.D.= 2.4.8 (CUT)
2. PROGRAM IS A REGENERATIVE REPEATER. ATC IS APPROACH TURN ON.
3. ATC TURN ON REQUIRES HR CODES 3 OR 7 IN ONE DIRECTION AND ABSENCE OF CODE 8 WITH CODE 1 PRESENT FROM THE APPROACH DIRECTION FOR 8 SEC.
4. ATC APPROACH TURN ON IS DEACTIVATED BY PLACING A JUMPER FROM TB3-12 TO TB3-13.
5. OPEN AUX. INPUTS = NO CODE IN BOTH DIRECTIONS AND BOTH AUX. CONVERTER OUTPUTS LOW.

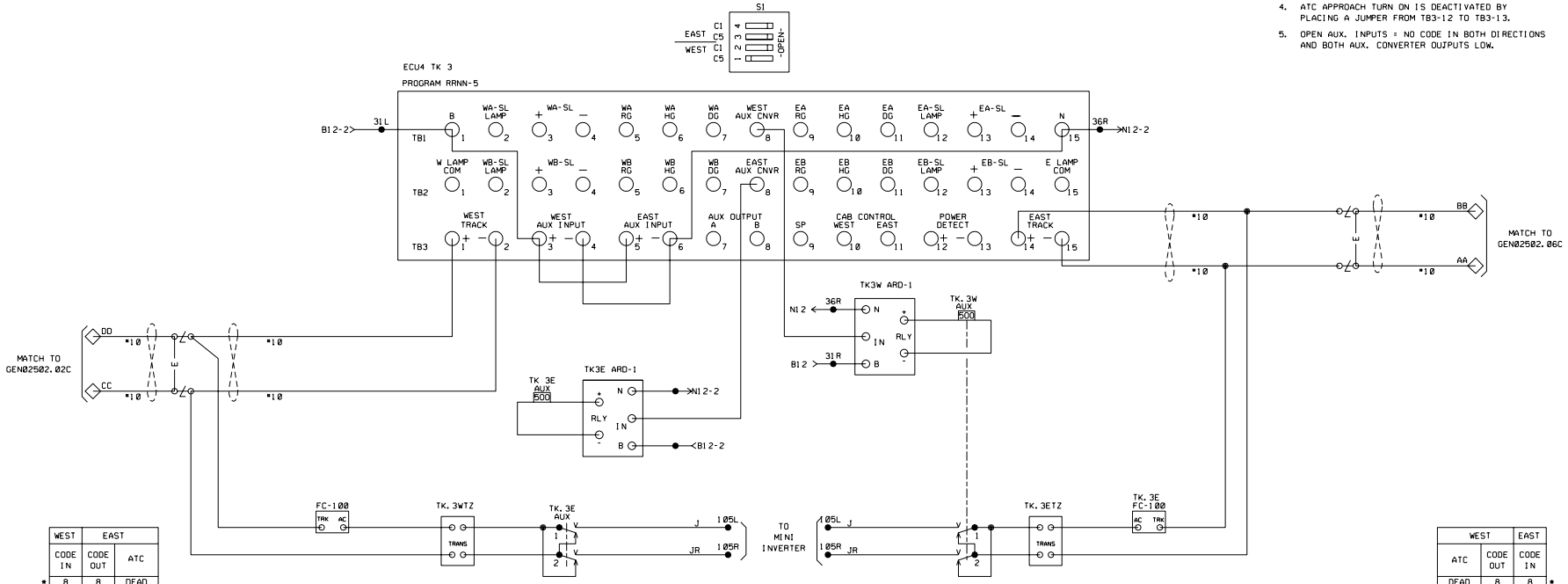

WEST CODE IN	EAST CODE OUT	EAST ATC	
8	8	DEAD	*
7	7	HOT	*
6	6	DEAD	*
5	5	DEAD	
4	4	HOT	
3	3	HOT	
2	2	DEAD	*
1	1	DEAD	*
NONE	NONE	DEAD	*

* CODE RATE IN USE

WEST ATC	WEST CODE OUT	EAST CODE IN	
DEAD	8	8	*
HOT	7	7	*
DEAD	6	6	*
DEAD	5	5	*
HOT	4	4	
HOT	3	3	
DEAD	2	2	*
DEAD	1	1	*
DEAD	NONE	NONE	*

* CODE RATE IN USE

REVISIONS

DRAWN BY A.COX
DATE: 6-22-89
APE: 87893
FILE:

8-24-93 JEP
REV. PER FC DATED 2-28-90 BY SH & RWT ACCT. OF JOINTS IN-STALLED AT WEST ST & CROSSING CIRCUITS REARRANGED ACCORD-INGLY. IN SERV 10/89

REV. 9-15-95
INSTALL BI-DIR SIGNALLING "HM" TO "NI"
11-7-94 DPZ/HAR/COM

REV. 7-2-03
INSTALLED CRTU.
W.O. #3327
REC. #11779
5-23-03
JJD/WITT/WITT/EML

UNION PACIFIC
QUALITY PRODUCTIVITY SAFETY
SIGNAL DESIGN

WEST ST.
WHEATON, IL.
M.P.25.02

GEN02502.10C

SYSTEM&TIME&&&&&&