Minimum Program Steps Report

Location and SIN

DOT Number: 174924K
Milepost Number: 25.02
Site Name: WEST STREET, ILLINOIS

SIN: 762010010016 *

* Parameter is part of office check number calculation.

MCF and Template Selection

MCF Name: GCP-T6X-02-1.mcf
MCF Revision: 021
MCFCRC: 6076E435

Template = 1D:3 Uni pairs *

* Parameter is part of office check number calculation.

Minimum Program Steps

TEMPLATE: module configuration
Track 5/RIO 2 Slot = RIO *
SSCC 1 Slot = Not Used *
SSCC 2 Slot = Not Used *

TEMPLATE: track 1-Uni, Island
Track 1 : GCP Frequency = 285 Hz
Track 1 : Approach Distance = 2690 ft
Track 1 : Prime Warning Time = 38 sec
Track 1 : Prime UAX = IP *
Track 1 : Prime UAX Pickup = 15 sec *
Track 1 : GCP Transmit Level = High
Track 1 : Uni/Bi/Sim-Bidirnl = Sim. Bidirnl *
Track 1 : Isl Frequency = 13.2 kHz
Track 1 : Island Distance = 169 ft

TEMPLATE: track 1 Daxes
Track 1 : Dax A Used = Yes *
Track 1 : Dax A Warning Time = 28 sec
Track 1 : Dax A Offset Distance = 437 ft
Track 1 : Dax B Used = Yes *
Track 1 : Dax B Warning Time = 28 sec
Track 1 : Dax B Offset Distance = 884 ft
Track 1 : Dax C Used = Yes *
Track 1 : Dax C Warning Time = 38 sec
Track 1 : Dax C Offset Distance = 1320 ft

TEMPLATE: track 2-Uni,No Island
Track 2 : GCP Frequency = 211 Hz
Track 2 : Approach Distance = 1721 ft
Track 2 : Prime Warning Time = 38 sec
Track 2 : Prime UAX = IP *
Track 2 : Prime UAX Pickup = 15 sec *
Track 2 : GCP Transmit Level = Medium (Set in Field)
Track 2 : Uni/Bi/Sim-Bidirnl = Sim. Bidirnl *

TEMPLATE: track Anding
AND 2 Used = Yes *
AND 3 Used = Yes *
AND 4 Used = Yes *

TEMPLATE: AND 1 XR
AND 1 Enable Used = Yes *

TEMPLATE: AND 2
AND 2 Track 1 = Dax A *
AND 2 Enable Used = Yes *

TEMPLATE: AND 3
AND 3 Track 1 = Dax C *
AND 3 Enable Used = Yes *

TEMPLATE: AND 4
AND 4 Track 1 = Isl Only *

TEMPLATE: OOS
OOS Control = OOS IPs *
T2 OOS Control = OOS Input 1 *

TEMPLATE: OP assignment 1
OUT 1.1 = AND 2 *
OUT 1.2 = T1 Dax B *
OUT 2.1 = AND 3 *
OUT 2.2 = T1 Dax D *

TEMPLATE: OP assignment 2
OUT 5.1 = T1 Dax E *
OUT 5.2 = AND 1 XR *
OUT 5.3 = AND 4 *

TEMPLATE: IP assignment 1
IN 1.1 = T1 Prime UAX *
IN 1.2 = Out Of Service IP 1 *
IN 2.2 = T2 Prime UAX *

TEMPLATE: IP assignment 2
IN 5.1 = AND 2 Enable *
IN 5.2 = AND 3 Enable *

PREDICTORS: track 1
Track 1 : Dax D Used = Yes *
Track 1 : Dax E Used = Yes *

GCP: track 1 Dax D
Track 1 : Dax D Warning Time = 28 sec *
Track 1 : Dax D Offset Distance = 1736 ft *

GCP: track 1 Dax E
Track 1 : Dax E Warning Time = 30 sec *
Track 1 : Dax E Offset Distance = 2852 ft *

* Parameter is part of office check number calculation.

Check Numbers

Office Check No. (DT 4.6.0): 6BD46FED
Office Check Number: 6BD46FED
Config. Check Number: 2D7C05DF
(Based on MCF Revision 021)

Parameters not part of office check number calculation:

Track 1 : GCP Frequency = 285 Hz
Track 1 : Approach Distance = 2690 ft
Track 1 : Prime Warning Time = 38 sec
Track 1 : GCP Transmit Level = High
Track 1 : Isl Frequency = 13.2 kHz
Track 1 : Island Distance = 169 ft
Track 1 : Dax A Warning Time = 28 sec
Track 1 : Dax A Offset Distance = 437 ft
Track 1 : Dax B Warning Time = 28 sec
Track 1 : Dax B Offset Distance = 884 ft
Track 1 : Dax C Warning Time = 38 sec
Track 1 : Dax C Offset Distance = 1320 ft
Track 2 : GCP Frequency = 211 Hz
Track 2 : Approach Distance = 1721 ft
Track 2 : Prime Warning Time = 38 sec
Track 2 : GCP Transmit Level = Medium (Set in Field)

Comments

<none>

Configuration Package File

Filename: GEN2502B 174924K.pac
Path: H:\02-Way\up08231-(up08252-up08307)-(PhaseI)\GCP Programs\PHASE 1\M.P. 25.02\25.02\
Date/Time: 7/23/2009 17:00:53

NEW SHEET

WHEATON, ILLINOIS
WEST STREET
M.P. 25.02
GENEVA SUBDIVISION
D.O.T.#174 924K

1	07-23-09

INSTALL HALF BLOCK SYSTEM FROM TURNER TO PARK, ILLINOIS. PHASE I PART I (MP. 29.50 TO MP. 25.54) AFE #88114
JJL
/ /CTC/MDF

NOTE: Actual OFFSET and ISLAND distances must be verified by field personnel.

UNION PACIFIC
QUALITY PRODUCTIVITY SAFETY
SIGNAL DESIGN

DES:	CTC
DIG:	CTC
CHK:	JJL
A.F.E.	88114
ID:	GEN2502.4AX

UNION PACIFIC RAILROAD

CHICAGO, ILLINOIS TO
CLINTON, IOWA
C.T.C. CIRCUITS

Office of Sr AVP Engineering - Signal/TCO Omaha, Nebraska

DATE	07-23-09
SHEET	4A
DWG	25.02
	GEN

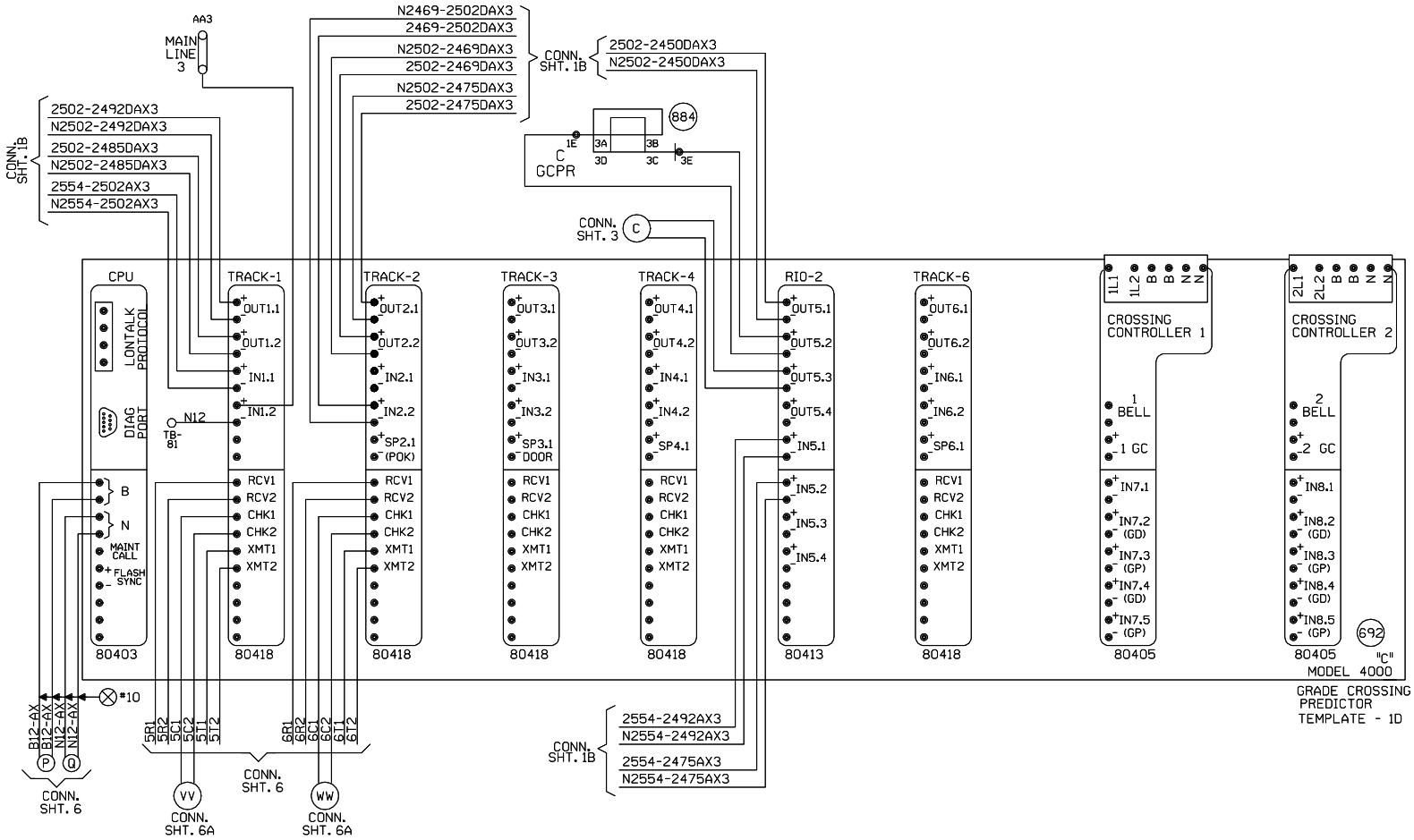

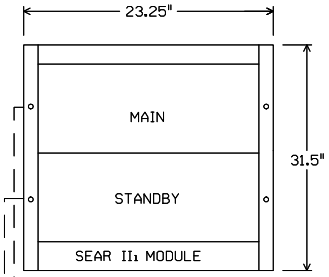

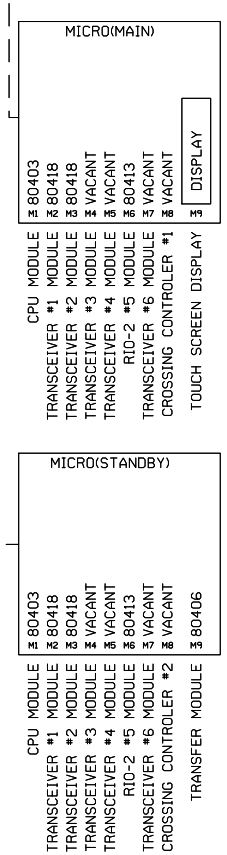

"Mf" FREQUENCY (HZ)	MAXIMUM TRANSMIT WIRE LENGTH (FEET)
86	100
114	125
156	150
211	200
285-970	250

NOTE:
EACH TRANSMITTER TO RAIL WIRE FROM XMT1 AND XMT2 MUST NOT EXCEED THE MAXIMUM LENGTH SPECIFIED IN THE TABLE SHOWN. THE RECEIVER WIRE LENGTH IS NOT CRITICAL. DOES NOT APPLY TO 6 TRACK WIRE APPLICATION.

NEW SHEET

WHEATON, ILLINOIS
WEST STREET
M.P. 25.02
GENEVA SUBDIVISION
D.O.T.#174 924K

1 07-23-09
INSTALL HALF BLOCK SYSTEM FROM TURNER TO PARK, ILLINOIS. PHASE 1 PART 1 (MP. 29.50 TO MP. 25.54) AFE #88114
JJL
/ /CTC/MDF

MODIFICATION LEVEL	
Q. A. LAST LEVEL CHECKED	DQ
LAST LEVEL MOD THIS TYPICAL	DQ
LAST LEVEL BY DESIGNER	DQ
CHANGED FROM TYPICAL?	Y

REV 02.01.08 4K 4TKB4GF.3

UNION PACIFIC
QUALITY PRODUCTIVITY SAFETY
SIGNAL DESIGN

DES: CTC
DIG: CTC
CHK: JJL
A.F.E. 88114
ID= GEN2502.5X

UNION PACIFIC RAILROAD
CHICAGO, ILLINOIS TO
CLINTON, IOWA
C.T.C. CIRCUITS
Office of Sr AVP Engineering - Signal/TCO Omaha, Nebraska

DATE 07-23-09
SHEET 5
DWG 25.02
GEN