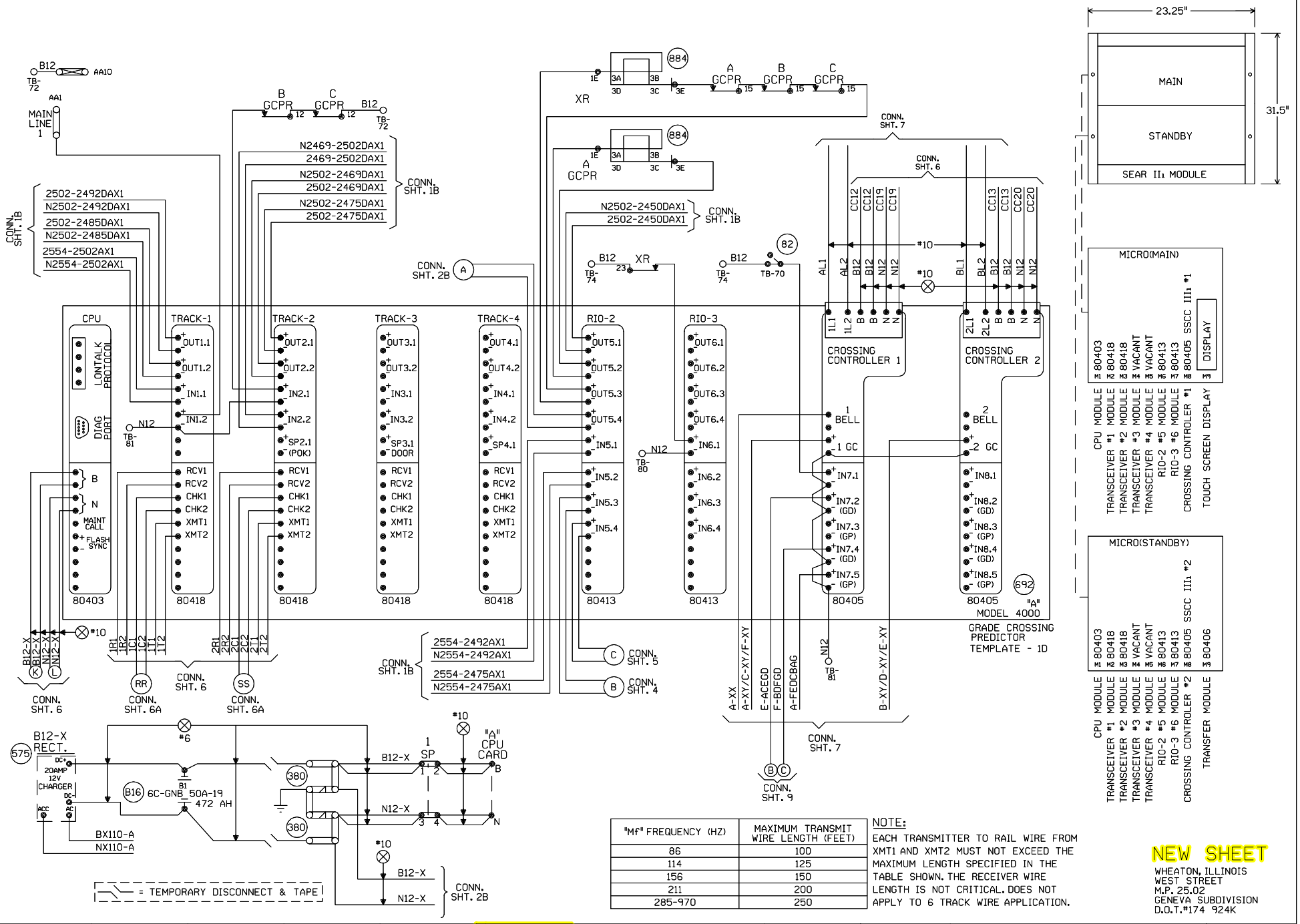

"Mf" FREQUENCY (HZ)	MAXIMUM TRANSMIT WIRE LENGTH (FEET)
86	100
114	125
156	150
211	200
285-970	250

NOTE:
EACH TRANSMITTER TO RAIL WIRE FROM XMT1 AND XMT2 MUST NOT EXCEED THE MAXIMUM LENGTH SPECIFIED IN THE TABLE SHOWN. THE RECEIVER WIRE LENGTH IS NOT CRITICAL. DOES NOT APPLY TO 6 TRACK WIRE APPLICATION.

NEW SHEET

WHEATON, ILLINOIS
WEST STREET
M.P. 25.02
GENEVA SUBDIVISION
D.O.T.#174 924K

1	07-23-09	INSTALL HALF BLOCK SYSTEM FROM TURNER TO PARK, ILLINOIS. PHASE 1 PART 1 (MP. 29.50 TO MP. 25.54) AFE #88114	JJL /CTC/MDF

MODIFICATION LEVEL

D. A. LAST LEVEL CHECKED	DQ
LAST LEVEL MOD THIS TYPICAL	DQ
LAST LEVEL BY DESIGNER	DQ
CHANGED FROM TYPICAL?	Y

REV 02.01.08 4K 4TKB4GF.3

UNION PACIFIC
QUALITY PRODUCTIVITY SAFETY
SIGNAL DESIGN

DES: CTC
DIG: CTC
CHK: JJL
A.F.E. 88114
ID: GEN2502.3X

UNION PACIFIC RAILROAD

CHICAGO, ILLINOIS TO
CLINTON, IOWA
C.T.C. CIRCUITS

Office of Sr AVP Engineering - Signal/TCO Omaha, Nebraska

DATE 07-23-09
SHEET 3
DWG 25.02
GEN

```
Minimum Program Steps Report
----------------------------

Location and SIN
----------------
DOT Number: 174924K
Milepost Number: 25.02
Site Name: WEST STREET, ILLINOIS

SIN: 762010010016 *

* Parameter is part of office check number calculation.

MCF and Template Selection
--------------------------
MCF Name: GCP-T6X-02-1.mcf
MCF Revision: 021
MCFCRC: 6076E435

Template = 1D:3 Uni pairs *

* Parameter is part of office check number calculation.

Minimum Program Steps
---------------------
TEMPLATE:  module configuration
Track 5/RIO 2 Slot = RIO *
Track 6/RIO 3 Slot = RIO *

TEMPLATE:  preemption
Preempt Logic = Simult *

TEMPLATE:  track 1-Uni, Island
Track 1 : GCP Frequency = 284 Hz
Track 1 : Approach Distance = 2690 ft
Track 1 : Prime Warning Time = 38 sec
Track 1 : Prime UAX = IP *
Track 1 : Prime UAX Pickup = 15 sec *
Track 1 : GCP Transmit Level = High
Track 1 : Uni/Bi/Sim-Bidirnl = Sim. Bidirnl *
Track 1 : Isl Frequency = 17.5 kHz
Track 1 : Island Distance = 169 ft

TEMPLATE:  track 1 Daxes
Track 1 : Dax A Used = Yes *
Track 1 : Dax A Warning Time = 28 sec
Track 1 : Dax A Offset Distance = 437 ft
Track 1 : Dax B Used = Yes *
Track 1 : Dax B Warning Time = 28 sec
Track 1 : Dax B Offset Distance = 884 ft
Track 1 : Dax C Used = Yes *
Track 1 : Dax C Warning Time = 38 sec
Track 1 : Dax C Offset Distance = 1320 ft

TEMPLATE:  track 2-Uni,No Island
Track 2 : GCP Frequency = 210 Hz
Track 2 : Approach Distance = 1721 ft
Track 2 : Prime Warning Time = 38 sec
Track 2 : Prime UAX = IP *
Track 2 : Prime UAX Pickup = 15 sec *
Track 2 : GCP Transmit Level = High
Track 2 : Uni/Bi/Sim-Bidirnl = Sim. Bidirnl *

TEMPLATE:  track Anding
AND 2 Used = Yes *
AND 3 Used = Yes *
AND 4 Used = Yes *

TEMPLATE:  AND 1 XR
AND 1 Enable Used = Yes *

TEMPLATE:  AND 2
AND 2 Track 1 = Dax A *
AND 2 Enable Used = Yes *

TEMPLATE:  AND 3
AND 3 Track 1 = Dax C *
AND 3 Enable Used = Yes *

TEMPLATE:  AND 4
AND 4 Track 1 = Isl Only *
AND 4 Enable Used = Yes *

TEMPLATE:  SSCC
SSCC 1 : Lamp Neutral Test = Off (Set in Field)
SSCC 2 : Lamp Neutral Test = Off (Set in Field)

TEMPLATE:  OOS
OOS Control = OOS IPs *
T2 OOS Control = OOS Input 1 *

TEMPLATE:  OP assignment 1
OUT 1.1 = AND 2 *
OUT 1.2 = T1 Dax B *
OUT 2.1 = AND 3 *
OUT 2.2 = T1 Dax D *

TEMPLATE:  OP assignment 2
OUT 5.1 = T1 Dax E *
OUT 5.2 = AND 5 *
OUT 5.3 = Sim Preempt *
OUT 5.4 = AND 4 *

TEMPLATE:  IP assignment 1
IN 1.1 = T1 Prime UAX *
IN 1.2 = Out Of Service IP 1 *
IN 2.1 = AND 1 XR Enable *
IN 2.2 = T2 Prime UAX *

TEMPLATE:  IP assignment 2
IN 5.1 = AND 2 Enable *
IN 5.2 = AND 3 Enable *
IN 5.3 = AND 4 Enable *
IN 5.4 = AND 4 Enable *
IN 6.1 = Preempt Health *

TEMPLATE:  IP assignment SSCC
IN 7.1 = AND 1 XR Enable *

PREDICTORS:  track 1
Track 1 : Dax D Used = Yes *
Track 1 : Dax E Used = Yes *

GCP:  track 1
Track 1 : GCP Freq Category = Offset *

GCP:  track 1 Dax D
Track 1 : Dax D Warning Time = 28 sec *
Track 1 : Dax D Offset Distance = 1736 ft *

GCP:  track 1 Dax E
Track 1 : Dax E Warning Time = 30 sec *
Track 1 : Dax E Offset Distance = 2852 ft *

GCP:  track 2
Track 2 : GCP Freq Category = Offset *

AND:  track Anding
AND 5 Used = Yes *

AND:  AND 5
AND 5 Track 1 = Prime *
AND 5 Track 2 = Prime *

* Parameter is part of office check number calculation.

Check Numbers
-------------
Office Check No. (DT 4.6.0): 4F59A97E
Office Check Number: 4F59A97E
Config. Check Number: 365D7BCE
(Based on MCF Revision 021)

Parameters not part of office check number calculation:

Track 1 : GCP Frequency = 284 Hz
Track 1 : Approach Distance = 2690 ft
Track 1 : Prime Warning Time = 38 sec
Track 1 : GCP Transmit Level = High
Track 1 : Isl Frequency = 17.5 kHz
Track 1 : Island Distance = 169 ft
Track 1 : Dax A Warning Time = 28 sec
Track 1 : Dax A Offset Distance = 437 ft
Track 1 : Dax B Warning Time = 28 sec
Track 1 : Dax B Offset Distance = 884 ft
Track 1 : Dax C Warning Time = 38 sec
Track 1 : Dax C Offset Distance = 1320 ft
Track 2 : GCP Frequency = 210 Hz
Track 2 : Approach Distance = 1721 ft
Track 2 : Prime Warning Time = 38 sec
Track 2 : GCP Transmit Level = High
SSCC 1 : Lamp Neutral Test = Off (Set in Field)
SSCC 2 : Lamp Neutral Test = Off (Set in Field)

Comments
--------
<none>

Configuration Package File
--------------------------
Filename: GEN2502A 174924K.pac
Path: H:\02-Way\up08231-(up08252-up08307)-(PhaseI)\GCP Programs\PHASE 1\M.P. 25.02\25.02\
Date/Time: 7/23/2009 16:58:43
```

NEW SHEET

WHEATON, ILLINOIS
WEST STREET
M.P. 25.02
GENEVA SUBDIVISION
D.O.T.#174 924K

1	07-23-09
INSTALL HALF BLOCK SYSTEM FROM TURNER TO PARK, ILLINOIS. PHASE I PART I (MP. 29.50 TO MP. 25.54) AFE #88114	JJL
/	/CTC/MDF

NOTE: Actual OFFSET and ISLAND distances must be verified by field personnel.

UNION PACIFIC
QUALITY PRODUCTIVITY SAFETY
SIGNAL DESIGN

DES:	CTC
DIG:	CTC
CHK:	JJL
A.F.E.	88114
ID= GEN2502.3AX	

UNION PACIFIC RAILROAD

CHICAGO, ILLINOIS TO
CLINTON, IOWA
C.T.C. CIRCUITS

Office of Sr AVP Engineering - Signal/TCO Omaha, Nebraska

DATE	07-23-09
SHEET	3A
DWG	25.02
	GEN

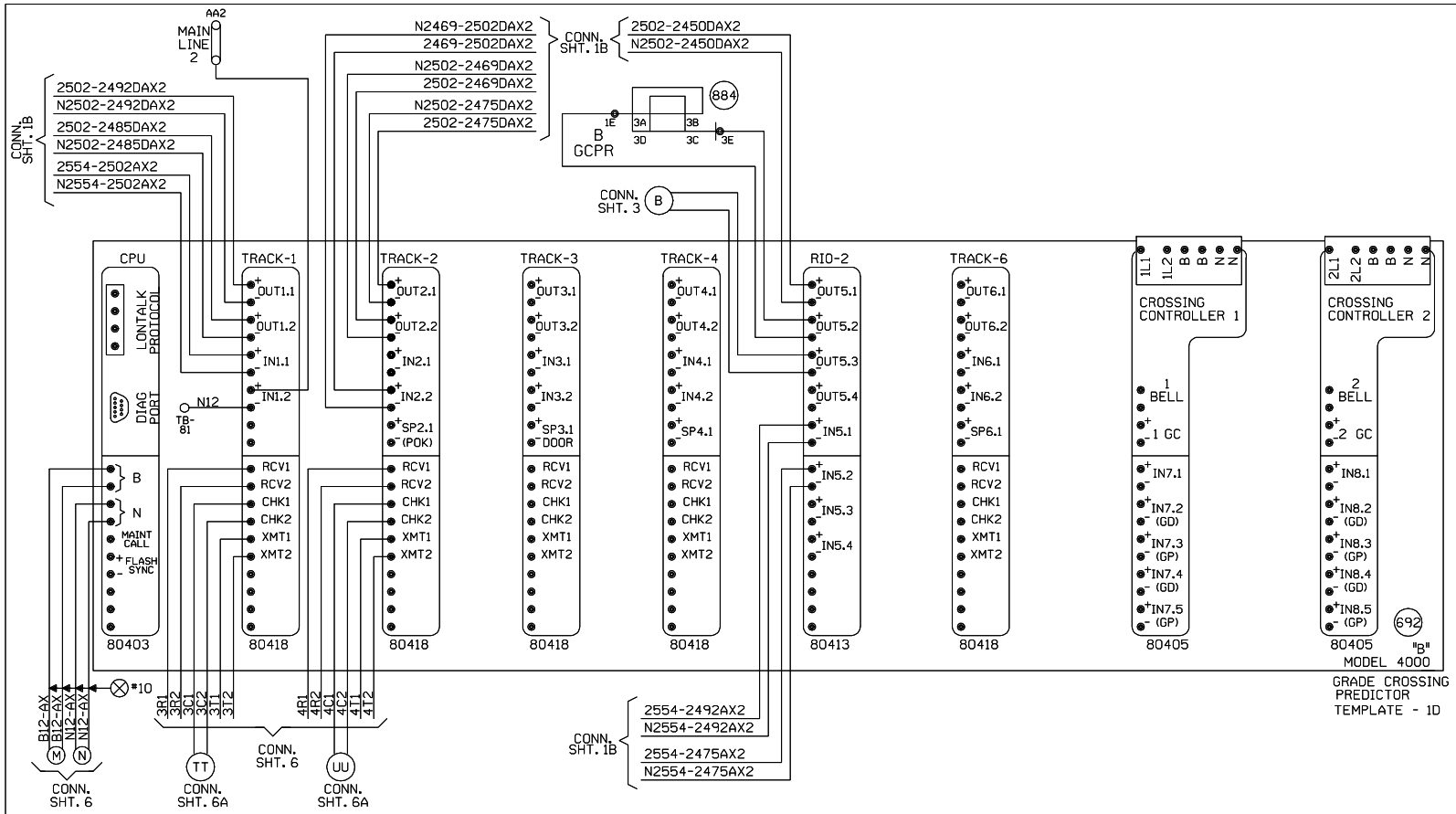

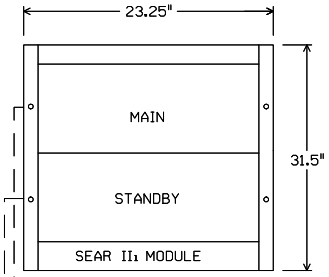

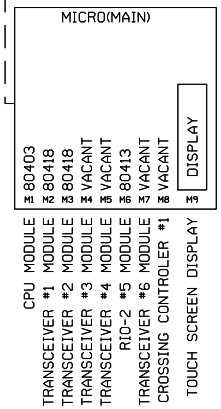

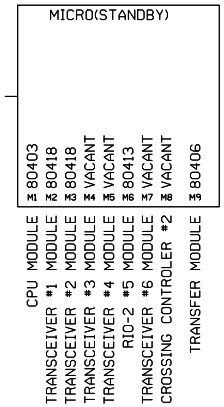

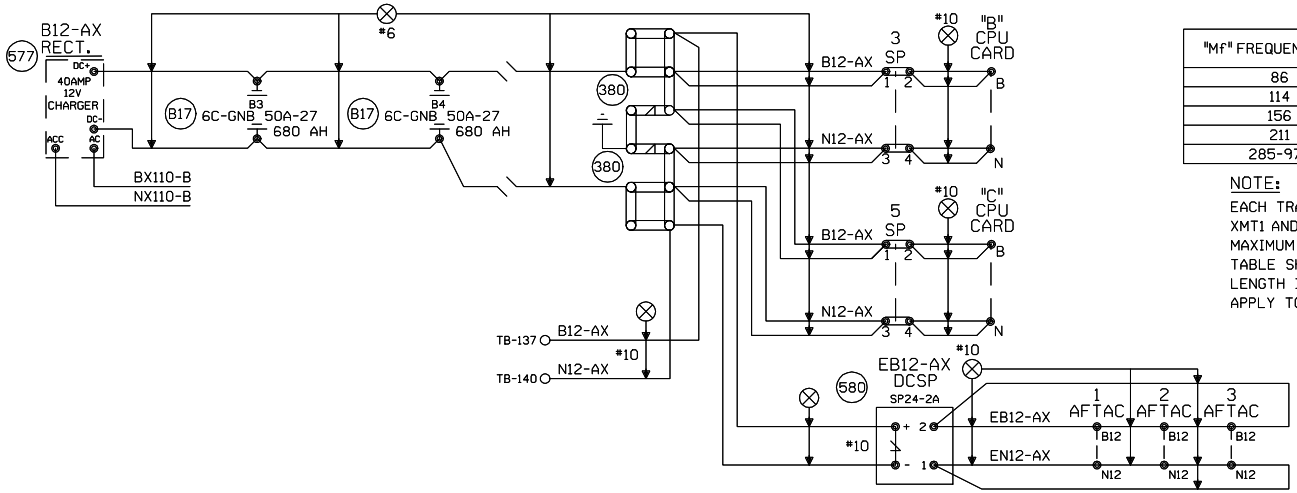

"Mf" FREQUENCY (HZ)	MAXIMUM TRANSMIT WIRE LENGTH (FEET)
86	100
114	125
156	150
211	200
285-970	250

NOTE:
EACH TRANSMITTER TO RAIL WIRE FROM XMT1 AND XMT2 MUST NOT EXCEED THE MAXIMUM LENGTH SPECIFIED IN THE TABLE SHOWN. THE RECEIVER WIRE LENGTH IS NOT CRITICAL. DOES NOT APPLY TO 6 TRACK WIRE APPLICATION.

= TEMPORARY DISCONNECT & TAPE

NEW SHEET
WHEATON, ILLINOIS
WEST STREET
M.P. 25.02
GENEVA SUBDIVISION
D.O.T.#174 924K

1	07-23-09	INSTALL HALF BLOCK SYSTEM FROM TURNER TO PARK, ILLINOIS. PHASE 1 PART 1 (MP. 29.50 TO MP. 25.54) AFE #88114 JJL / /CTC/MDF

MODIFICATION LEVEL	
Q. A. LAST LEVEL CHECKED	DQ
LAST LEVEL MOD THIS TYPICAL	DQ
LAST LEVEL BY DESIGNER	DQ
CHANGED FROM TYPICAL?	Y

REV 02.01.08 4K 4TKB4GF.3

UNION PACIFIC
QUALITY PRODUCTIVITY SAFETY
SIGNAL DESIGN

DES: CTC
DIG: CTC
CHK: JJL
A.F.E. 88114
ID= GEN2502.4X

UNION PACIFIC RAILROAD
CHICAGO, ILLINOIS TO CLINTON, IOWA
C.T.C. CIRCUITS
Office of Sr AVP Engineering - Signal/TCO Omaha, Nebraska

DATE 07-23-09
SHEET 4
DWG 25.02
GEN