ORIGINAL

Completion of this form is necessary to accomplish the statutory purpose as outlined in the Illinois Public Utilities Act, chapter 111 2/3, Sec. 9. Failure to provide the requested information may prevent your request from being processed. This form has been approved by the Forms Management Center.

Form 3

OCT 2 0 2008
Illinois Commerce Commission
RAILROAD SECTION

STATE OF ILLINOIS
ILLINOIS COMMERCE COMMISSION

Petition for permission to make a major change in crossing protection, or to install new protection under 92 Illinois Administrative Code 1535.400 (d)

X-12918
T09-0089

Date: **October 13, 2008**

To the Illinois Commerce Commission:

The petitioner **(Union Pacific Railroad Company)** shows

177018B

(1) That it is a railroad company operating a line of railroad in the State of Illinois.

(2) That petitioner proposes and hereby makes application for authority to make a major change in crossing protection, or to install new protection, under 92 Illinois Administrative Code 1535.400 (d) adopted by this Commission.

(3) That the location of the crossing, the nature of protection now established and proposed to be established, and other pertinent facts in connection therewith, are set forth in the statement attached to and forming part of this petition.

(4) That petitioner's reasons and purpose, with reference to its said proposal are

Install automatic flashing light with Gates

(5) That the facts set forth in this petition and in the statement and plans or plats attached thereto, are, all of them, true and correct to the best of petitioner's knowledge and belief.

WHEREFORE, the petitioner prays that the Commission will, if deemed desirable by the Commission, set the aforesaid matter for hearing, and that the Commission enter an order or adopt a resolution consenting to and granting authority for the making of the said proposed changes in or additions to crossing protection.

Union Pacific Railroad Company

By Richard Ellison

Richard Ellison
(Public Project Coordinator
301 West Lake ST.
Northlake IL. 60164
708-649-5214

(Attorney for Petitioner)

(Use Enter key for up to four additional lines.)

(Attorney's Address)

DOCKETED

AUG - 7 2009

AUG - 7 2009

Statement, attached to and part of an application for permission to make a major change in crossing protection or to install new protection, under 92 Ill. Adm. Code 1535.400(d).

1. Name of Railroad Company **Union Pacific Railroad**

2. Crossing Number **177018B**

3. Village or City **Harvard**

4. Name of Street or Highway **White Oaks Road.**

5. Public Agency Maintaining Highway **Mchenry County**

6. Protection now established: (Give full description. Indicate the hours of any manual protection.)

   X Bucks and Stop

7. Protection desired: (Give details)

   Install automatic flashing light with Gates

8. Number of main tracks **1** Other tracks **0**

9. Number of passenger train movements: 6 a.m. to 6 p.m. **0** 6 p.m. to 6 a.m. **0**

10. Number of freight train movements: 6 a.m. to 6 p.m. **3** 6 p.m. to 6 a.m. **3**

11. Approximate number of switch movements: 6 a.m. to 6 p.m. **0** 6 p.m. to 6 a.m. **0**

12. Maximum speed of trains at crossing on each track in each direction

Track 1 N/E Bound	**50**	mph	S/W Bound	**50** mph
Track 2 N/E Bound	**0**	mph	S/W Bound	**0** mph
Track 3 N/E Bound		mph	S/W Bound	mph

13. Passenger platforms served by tracks within the limits of track circuits, if any

14. Where automatic signals or gates are proposed, approximately number of train or engine movements daily which would cause false indications or operation

15. Nature and approximate amount of street or highway traffic over crossing
75

16. In addition to the information listed hereinbefore in Form 3, attach a track plan or plat of the proposed crossing. This plan should show:

(a) Width and surface of highway.
(b) Highway intersections (including private driveways to be so indicated) and location of established highway signs or signals within 100 feet of crossing.
(c) Location of tracks, switches and other railroad facilities such as block signals, etc. within limits of track circuits, present and/or proposed.
(d) Where automatic protection is proposed, show proposed location of signals (sidelights, cantilevers, etc., if any).
(e) Show the length of each operation track section within the control limits of the crossing protection and its function.

ADDITIONAL INFORMATION

VERIFICATION

I, **(Richard Ellison)**, first being duly sworn upon oath depose and say that I am **(Public project Coordinator** of **Union Pacific Railroad)**, an **(Illinois)** corporation; that I have read the above and foregoing petition by me subscribed and know the contents thereof; that said contents are true in substance and in fact, except as to those matters stated upon information and belief, and as to those, I believe same to be true.

Richard Ellison

Public Project Coordinator

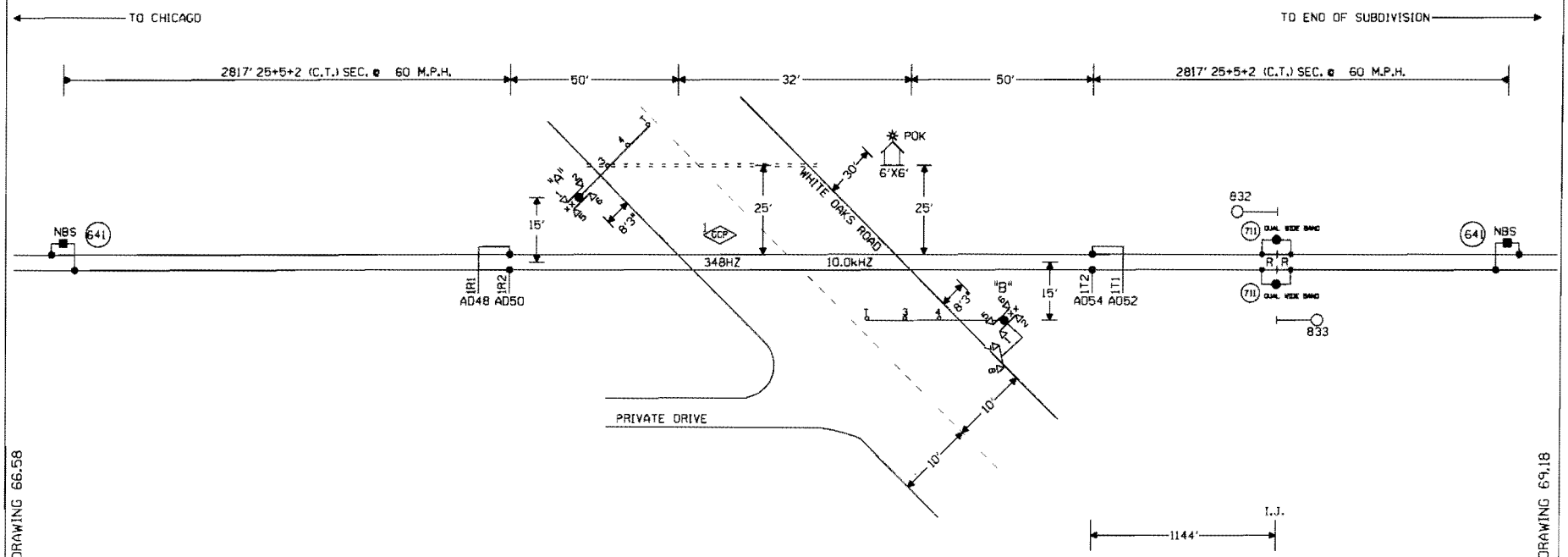

CONNECTS TO DRAWING 66.58

CONNECTS TO DRAWING 69.18

CONSTRUCTION NOTES:

1. INSTALL BATTERY CHOKE 8A065 (TAB 706) AT M.P. 67.37
2. INSTALL BATTERY CHOKE 8A065 (TAB 706) AT M.P. 69.90
3. CRTU PART NUMBER 522 8800 (GETS 180642-000).

NOTES:

⊗ = TWISTED WIRES
INSULATED 1 TWIST PER FT.
ALL TRACK WIRES 2C. #6

TRANSMITTER AND RECEIVER LEADS TO BE SEPARATED BY AT LEAST 12" IN TRENCH, LENGTHS SHOULD NOT EXCEED MANUFACTURES RECOMMENDATION.

TOP OF FOUNDATION TO BE AT SAME ELEVATION AS THE SURFACE OF THE TRAVELED WAY & NO MORE THAN 4" ABOVE THE SURFACE OF THE GROUND.

ALL BUNGALOW WIRING TO BE #16 AWG FLEX UNLESS OTHERWISE SPECIFIED EXCEPT ALL GROUND WIRE TO BE #6 AWG FLEX OR LARGER.

ALL WIRING IN GATE MECHANISM TO BE #10 "AWG FLEX".

REFER TO UP STANDARD DWG FOR BUNGALOW GROUNDING.

PORTABLE GENERATOR EXTENSION CORD FOR 240V TO 240V IS PROVIDED AS WELL AS A 120V TO 240V ADAPTER.

ALL LIGHTS TO BE 12" ROUNDELS.

= = = = = = 4" X 50' CONDUIT

LIGHTS: LED LIGHTS

GATE A: 18'
GATE B: 18'

xx = BELL

W(S) ←—○—→ E(N)

RECEIVED
AUG 13 2009
Illinois Commerce Commission
RAIL SAFETY SECTION

NEW SHEET

Designed: 3/7/08	MODIFICATION LEVEL		
INSTALL FLASHERS AND GATE WITH CKT AT M.P.68.85 WHITE OAKS ROAD	O. A. LAST LEVEL CHECKED	DR	
	LAST LEVEL MOD THIS TYPICAL	DR	
	LAST LEVEL BY DESIGNER	DR	
	CHANGED FROM TYPICAL 2	Y	

UNION PACIFIC — QUALITY PRODUCTIVITY SAFETY — SIGNAL DESIGN

Date: 03/07/08	
Des: SSC	
Chk: BCH	
AFE: 87049	

UNION PACIFIC RAILROAD
HARVARD, ILLINOIS
WHITE OAKS ROAD
HARVARD SUBDIVISION
Office of Sr. AVP Engineering - Signal/TCO Omaha, Nebraska

Sh.: 1	
DOT 177018B	
MP: 68.85	
ID: HAR6885.1X	

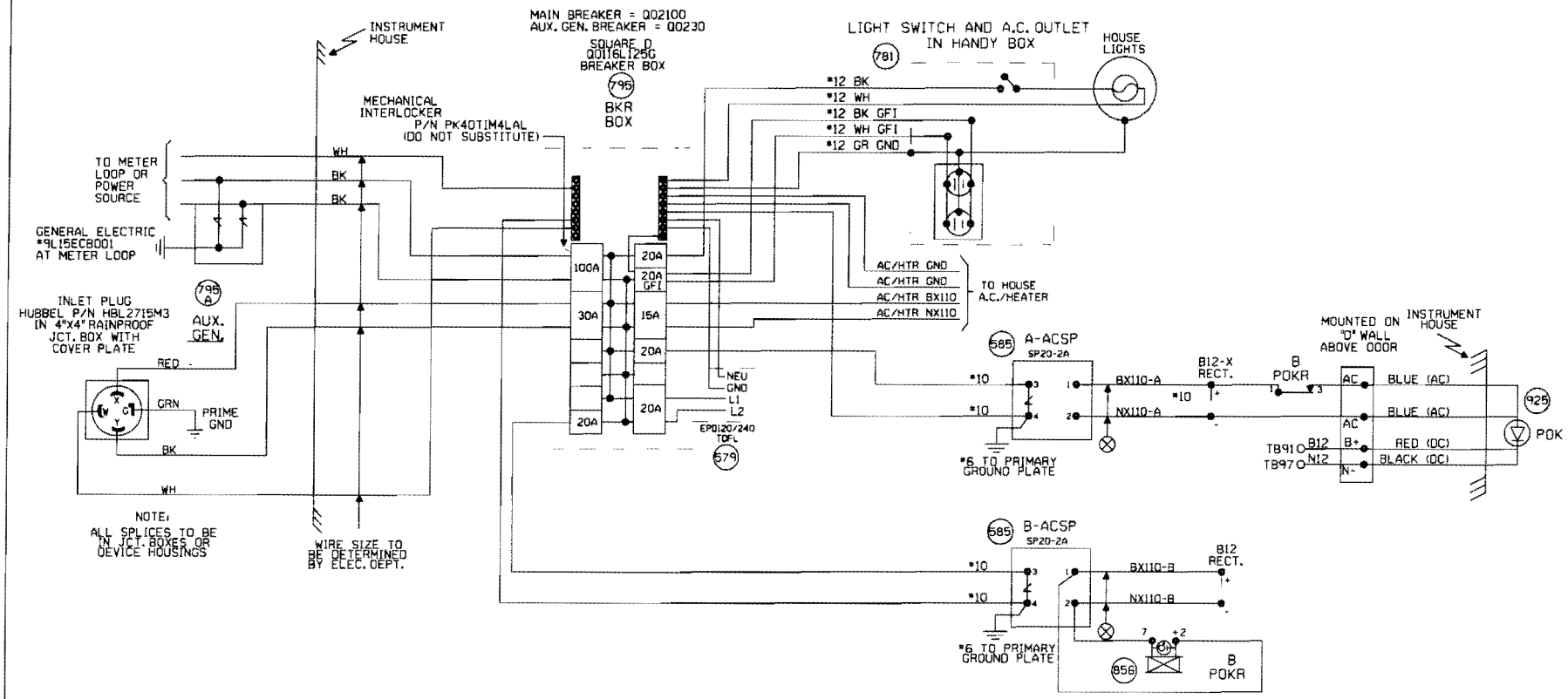

NEW SHEET

				Downgrade 3/7/08 INSTALL FLASHERS AND GATE WITH CKT AT MP 68.85 WHITE OAKS ROAD	MODIFICATION LEVEL		UNION PACIFIC	Date: 03/07/08	UNION PACIFIC RAILROAD	Sh.: 2
					G. A. LAST LEVEL CHECKED	DR	QUALITY PRODUCTIVITY SAFETY	Des: SSC	HARVARD, ILLINOIS	DOT 177018B
					LAST LEVEL MOD THIS TYPICAL	DR		Chk: CJB	WHITE OAKS ROAD	MP: 68.85
					LAST LEVEL BY DESIGNER	DR	SIGNAL DESIGN	AFE: 87049	HARVARD SUBDIVISION	ID: HAR6885.2X
				Reason NON-87049 RN CJB / SSC/CJB	CHANGED FROM TYPICAL 2	Y			Office of Sr. AVP Engineering - Signal/TCO Omaha, Nebraska	

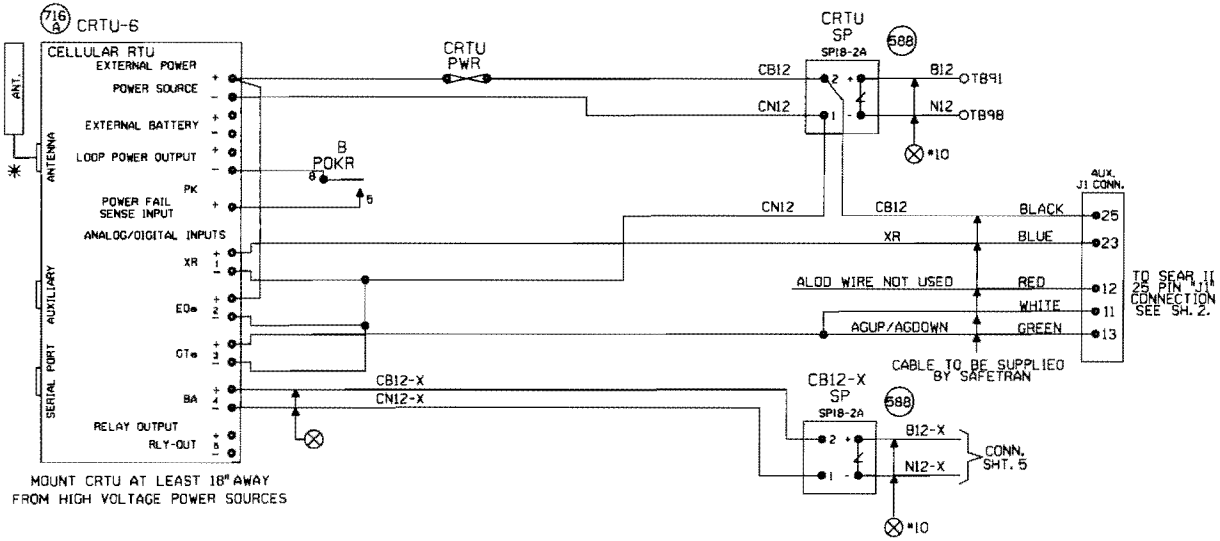

MOUNT CRTU AT LEAST 18" AWAY
FROM HIGH VOLTAGE POWER SOURCES

NOTES:

ALL DIODES 1N5060 OR 1N4004 UNLESS OTHERWISE NOTED.

✱ MOUNT ANTENNA ON TOP OF HOUSE.
INSTALL ANTENNA CABLE AND CHOKE PER TECH BULLENTIN #99-0015-00

ALL WIRES #18 UNLESS OTHERWISE NOTED.

ALL UNUSED 'NC' INPUTS MUST BE TIED HIGH TO BATTERY

ALL UNUSED ANALOG INPUTS MUST BE TIED HIGH TO BATTERY

ALL UNUSED 'ND' INPUTS MUST BE DISCONNECTED

NORMAL STATE FOR ANALOG CHANNELS IS EQUAL TO THE STORED NOMINAL VOLTAGE +120% OR -81%

CRTU FRONT PANEL DISPLAY CHART INDICATES NORMAL STATE

■ DIGITAL INPUT HIGH, OR POWER FAIL INPUT CLOSED ☐ DIGITAL INPUT LOW, OR POWER FAIL INPUT OPEN

■ L ← LATCH IS SET BECAUSE CRTU DETECTED AN ALARM CONDITION
12.06V L ←

'sRUN MODE' 'sRUN MODE-SILENT'
CRTU RADIO IS DISABLED. REPROGRAM CRTU WITH LAPTOP.

ANALOG AND AC INPUT MODULES AND SURGE PROTECTORS MUST BE MOUNTED LESS THAN 18" FROM CRTU

ANALOG MODULES CONVERT DC VOLTAGE TO A SQUARE WAVE. A WORKING ANALOG MODULE WILL HAVE 4.5VDC TO 8.0VDC BETWEEN 5VOUT+ AND 6VOUT-. WHERE, 0VOLTS = 0HZ OUT, 30VOLTS = 10KHZ OUT, AND 15VOLTS = 5KHZ OUT

MAKE SURE CRTU IS PROGRAMMED WITH CALIBRATION SETTINGS.

CRTU CH4 CAN BE CONNECTED TO EITHER SP18 OR EQUIPMENT SIDE OF MOSA1, TAB 565

UNIT INSTALLATION AND SETUP

R.R. SITE ID WHERE: SSSS = 4 CHARACTER SUBDIVISION ID. FILL WITH PRECEDING ZEROS AS REQUIRED. THE MAIN TRACK SUBDIVISION ID* IS IN THE CURRENT TIMETABLE. INDUSTRIAL LEADS, LEASED, AND LEAD TRACKS LISTED WITHIN THE SUBDIVISION MAY HAVE THEIR OWN UNIQUE SUBDIVISION ID*. ALWAYS REFER TO CURRENT PRINTED COPY OF THE TIMETABLE.
LLLLLLLL = 8 CHARACTERS USE DOT* AT CROSSINGS, AND
WOLLLLLL = USE 'WO' THEN MP* AT WAYSIDE LOCATIONS.
EXAMPLE = 0785WO1801.5UT
HBLLLLLL = USE 'HB' THEN MP* AT HBD SITES.
EXAMPLE = 0100-HB65.62TX
THE MP* MUST USE A DECIMAL POINT TO SEPARATE NUMBERS. FILL WITH PRECEDING DASHES AS REQUIRED.
AA = 2 CHARACTER STATE NAME FOR ALL LOCATIONS, MUST BE 14 CHARACTERS LONG, NO SPACES ALLOWED.

SITE IDENTIFIER: SSSSLLLLLLLLAA	0163-177018BIL
OPERATION TO RESUME:	RUN
SIGNAL STRENGTH dBm	
CARRIER ID	
FIRMWARE VERSION	2.3.06
SERIAL NUMBER	
BOOT VERSION:	
CHM VERSION:	
MIN ASSIGNMENT	
ESN: (MICROBURST ONLY)	
CONFIGURATION NET	
SILENCE INTERVAL	60 MINUTES
HEALTHCHECK INTERVAL	EVERY 2 DAYS
ALARM DEFER DELAY	240 MINUTES (4 HOURS)
SIGNAL STATUS	
SCADANET STATUS	
CALIBRATION CONSTANT CH1	
CALIBRATION CONSTANT CH2	
CALIBRATION CONSTANT CH3	
CALIBRATION CONSTANT CH4	
CALIBRATION CONSTANT PS	

FIELD PROVIDES: SAMPLED NOMINAL VOLTAGES, SCADANET STATUS CALIBRATION CONSTANTS, SERIAL NUMBER, AND SIGNAL STATUS.

CHANNEL SETUP - STANDARD CONFIGURATION 32:XR,EOe,GTe,Be

CHANNEL NORMAL STATE	SENSE (NO/NC)	NAME FUNCTION	RECOGNITION DELAY SECONDS ACTIVE	RECOGNITION DELAY SECONDS NORMAL	RETURN TO NORMAL	REPORTING MODE	ALARM LINKED CHANNEL	ALARM LINKED CRITERIA	EVENT LOGGING ENABLED OPTIONS
POWER FAIL (CH5) ■	POWER FAIL DETECT NO	PFin-PK AC POWER FAIL	7,200 ALARM	300 NORMAL	ENABLED	ALERT	DISABLED	N/A	ANALOG VALUE SENT
CH1 ■	DIGITAL INPUT NC	CH1-XR XR DOWN TO LONG	1,800 ALARM	1 NORMAL	ENABLED	ALERT	DISABLED	N/A	
CH2 ☐	DIGITAL INPUT NO	CH2-EOe LIGHT OUT	120 ALARM	10 NORMAL	ENABLED	ALERT	DISABLED	N/A	
CH3 ■	DIGITAL INPUT NO	CH3-GTe GATES NOT UP/DOWN	120 ALARM	10 NORMAL	ENABLED	ALERT	DISABLED	N/A	DIGITAL EVENTS
CH4 STORED NOMINAL VOLTAGE	ANALOG INPUT N/A	CH4-Be/V BATTERY MONITOR BATTERY LOW	600 ALARM	1200 NORMAL	ENABLED	ALERT W/UPDATE	DISABLED	N/A	PFin-PK CH1-XR CH2-EOe CH3-GTe
POWER SOURCE (CH6)	ANALOG INPUT N/A	PS-Be/V BATTERY MONITOR BATTERY LOW	600 ALARM	1200 NORMAL	ENABLED	ALERT W/UPDATE	DISABLED	N/A	

ANALOG CHANNEL	USEFUL RANGE VOLTS LOW	USEFUL RANGE VOLTS HIGH	DISPLAYED RANGE VOLTS LOW	DISPLAYED RANGE VOLTS HIGH	RELATIVE ALARM POINT LOW	RELATIVE ALARM POINT HIGH	ABSOLUTE ALARM POINT LOW	ABSOLUTE ALARM POINT HIGH	AUTOMATIC UPDATE INTERVAL	STORED NOMINAL VOLTAGE	SAMPLED NOMINAL VOLTAGE
CH4	0.0	30.00	0.0	30.00	81%	120%	10.0	29.0	14 DAYS	12.69	
POWER SOURCE	0.0	30.00	0.0	30.00	81%	120%	10.0	29.0	14 DAYS	12.69	
RELAY OUTPUT	NAME RLY-OUT		ACTIVE SET-UP-OPEN		NORMAL CLR-ON-CLOSE		PULSE DURATION		15 SECONDS	StdCfg Ver: 2.3.3 REV'D 9-20-02	

MAINTENANCE OPERATIONS

TO START OR ABORT ANY PROCEDURE

1. PRESS THE 'CANCEL' BUTTON FIRST

WHEN RESPONDING TO A CALL, PUT THE CRTU IN THE 'SILENCE ALARMS' MODE

1. PRESS 'SELECT' AND THEN '+ ARROW' BUTTON UNTIL
   DISPLAY: ACTION?
   SILENCE ALARMS
2. PRESS THE 'SELECT' BUTTON TWICE
3. CORRECT PROBLEM AND SIMULATE NORMAL TRAIN MOVEMENT THROUGH THE LOCATION
4. EXAMINE EACH CHANNEL ON THE CRTU
5. PRESS THE '+/- ARROW' BUTTON
   VERIFY ALL CHANNELS INDICATE A NORMAL STATE
   NORMAL STATES ARE ON THE CHANNEL SETUP CHART

CLEAR TIMERS, LATCHES AND SEND ALL NORMAL

1. DO STEPS #1 - #5 ABOVE, AND PRESS 'CANCEL'.
2. PRESS 'SELECT' AND THEN '- ARROW' BUTTON UNTIL
   DISPLAY: ACTION?
   SERVICE MODE
3. PRESS 'SELECT' AGAIN TO RESET TIMERS, AND IF
   DISPLAY: SERVICE MODE
   ALL NORMAL
4. PRESS 'SELECT' AGAIN TO CLEAR LATCHES, AND SEND ALL NORMAL. SKIP STEPS #5-#6.
5. HOWEVER, IF ALARMS ARE NOT CLEARED:
   DISPLAY: SERVICE MODE
   ALARMS PENDING/PRESENT
6. PRESS 'CANCEL', CORRECT PROBLEM AND REPEAT STEPS #2 THRU #5 UNTIL ALL NORMAL SENT.

TO CANCEL THE 'SILENCE ALARMS' MODE

1. PRESS 'SELECT' AND THEN '+ ARROW' BUTTON UNTIL
   DISPLAY: ACTION?
   CANCEL SILENCE
2. PRESS THE 'SELECT' BUTTON AGAIN

EXAMINE & SET BATTERY VOLTAGE NOMINAL VALUE

1. PRESS THE '+ ARROW' OR '- ARROW' BUTTON UNTIL THE DESIRED CHANNEL IS DISPLAYED.
   DISPLAY: PS-Ba/
   13.83V NORMAL
2. VERIFY THE DISPLAYED READING WITH A DIGITAL VOLTMETER
3. PRESS THE 'SELECT' BUTTON, AND THE CRTU DISPLAY WILL SWITCH BETWEEN CURRENT/SAVED NOMINAL VOLTAGE VALUES.
   DISPLAY: NOMINAL ON #6? (CURRENT)
   13.83
   DISPLAY: SAVED NOMINAL 6 (STORED)
   12.69
4. PRESS THE 'SELECT' BUTTON AND THE CURRENT OR 'NOMINAL ON' VALUE WILL BE SAMPLED AND STORED AS THE 'SAVED NOMINAL' VALUE
5. VERIFY THE 'NOMINAL ON' AND 'SAVED NOMINAL' VALUES ARE EQUIVALENT, REPEAT STEPS #1 THRU #3 & PRESS THE 'CANCEL' BUTTON.

NEW SHEET

Downgrade 3/7/08
INSTALL FLASHERS AND GATE WITH CWT AT MLP 68.85 WHITE OAKS ROAD
Rev: 87049
Dr: JJB
Ck: DSC/JJF

MODIFICATION LEVEL	
Q.A. LAST LEVEL CHECKED	DJ
LAST LEVEL MOD THIS TYPICAL	DJ
LAST LEVEL BY DESIGNER	DR
CHANGED FROM TYPICAL?	Y

REV 95.01.04 CRTUCFG32-2SAT.3

UNION PACIFIC
SAFETY QUALITY PRODUCTIVITY
SIGNAL DESIGN

Date: 03/07/08
Des: SSC
Chk: CJB
AFE: 87049

UNION PACIFIC RAILROAD
HARVARD, ILLINOIS
WHITE OAKS ROAD
HARVARD SUBDIVISION
Office of Sr AVP Engineering - Signal/TCO Omaha, Nebraska

Sh.: 3
DOT: 177018B
MP: 68.85
ID: HAR6885.3X

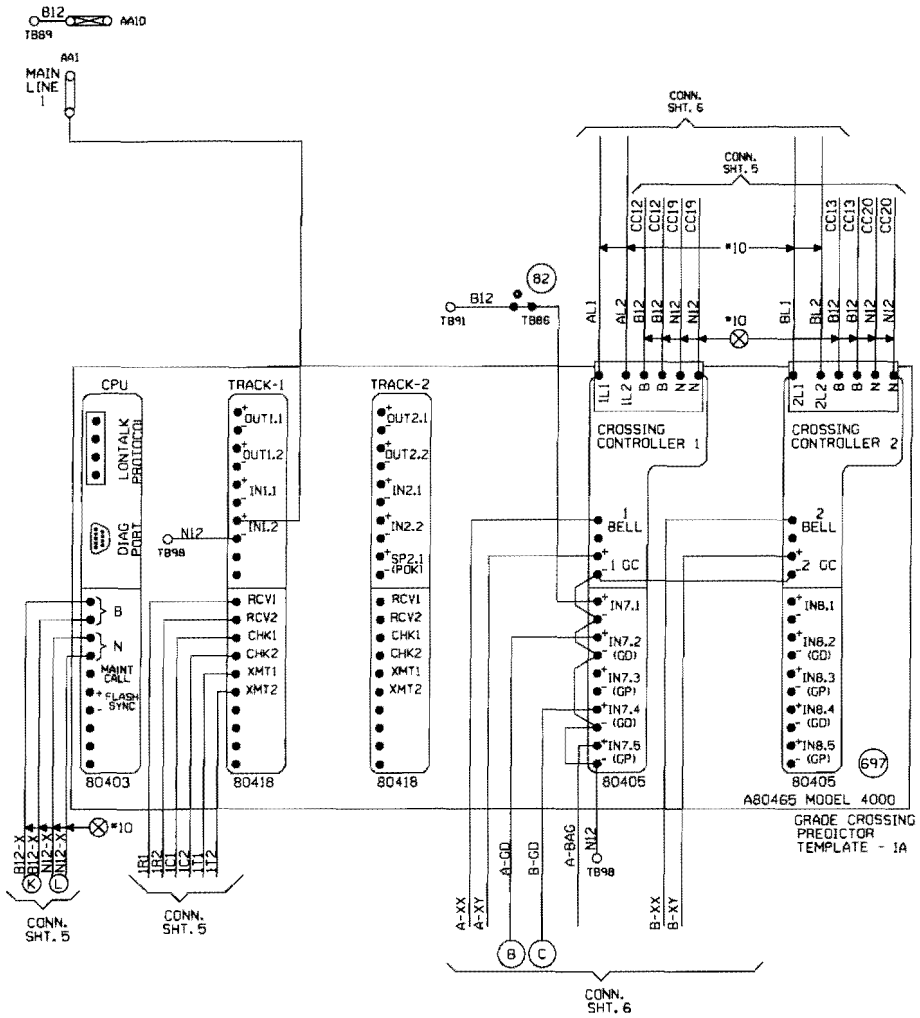

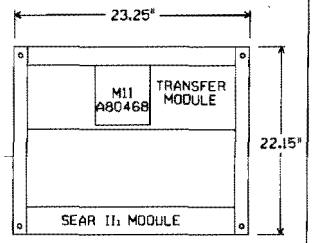

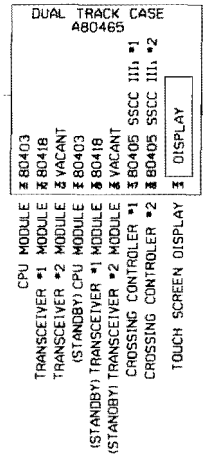

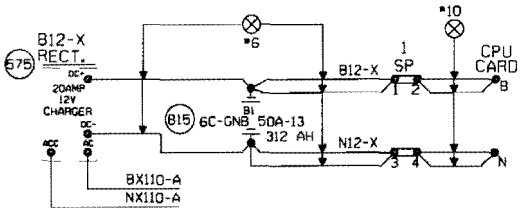

"Mf" FREQUENCY (HZ)	MAXIMUM TRANSMIT WIRE LENGTH (FEET)
86	100
114	125
156	150
211	200
285-970	250

NOTE:
EACH TRANSMITTER TO RAIL WIRE FROM XMT1 AND XMT2 MUST NOT EXCEED THE MAXIMUM LENGTH SPECIFIED IN THE TABLE SHOWN. THE RECEIVER WIRE LENGTH IS NOT CRITICAL. DOES NOT APPLY TO 6 TRACK WIRE APPLICATION.

NEW SHEET

Designed: 3/7/08
INSTALL FLASHERS AND GATE WITH CMT AT ALP,BELAB WHITE OAKS ROAD
Rev: WO: 87049 CJB
PB: SSC/CJB

MODIFICATION LEVEL	
D. A. LAST LEVEL CHECKED	DR
LAST LEVEL MOD THIS TYPICAL	DR
LAST LEVEL BY DESIGNER	DR
CHANGED FROM TYPICAL?	Y
WO 82, 81, 89 4K 21KGF, 2	

UNION PACIFIC
SAFETY QUALITY PRODUCTIVITY
SIGNAL DESIGN

Date: 03/07/08
Des: SSC
Chk: CJB
AFE: 87049

UNION PACIFIC RAILROAD
HARVARD, ILLINOIS
WHITE OAKS ROAD
HARVARD SUBDIVISION
Office of Sr AVP Engineering - Signal/TCO Omaha, Nebraska

Sh.: 4
DOT 177018B
MP: 68.85
ID: HAR6885.4X

Minimum Program Steps Report

Location and SIN

DOT Number: 177018B
Milepost Number: 68.85
Site Name: HARVARD, IL

SIN: 762010010016 *

* Parameter is part of office check number calculation.

MCF and Template Selection

MCF Name: GCP-T6X-02-1.mcf
MCF Revision: 021
MCFCRC: 6076E435

Template = 1A:6 Trk Bi *

* Parameter is part of office check number calculation.

Minimum Program Steps

TEMPLATE: track 1-Bi, Island
Track 1 : GCP Frequency = 348 Hz
Track 1 : Approach Distance = 2817 ft
Track 1 : Prime Warning Time = 27 sec
Track 1 : GCP Transmit Level = Medium (Set in Field)
Track 1 : Isl Frequency = 10.0 kHz

TEMPLATE: AND 1 XR
AND 1 Enable Used = Yes *

TEMPLATE: SSCC
SSCC 1 : Lamp Neutral Test = Off (Set in Field)
SSCC 2 : Lamp Neutral Test = Off (Set in Field)

TEMPLATE: OOS
OOS Control = OOS IPs *

TEMPLATE: IP assignment 1
IN 1.2 = Out Of Service IP 1 *

TEMPLATE: IP assignment SSCC
IN 7.1 = AND 1 XR Enable *

GCP: track 1
Track 1 : Island Distance = 132 ft *

* Parameter is part of office check number calculation.

Check Numbers

Office Check No. (DT 4.6.0): 5D190508
Office Check Number: 5D190508
Config. Check Number: 507945AC
(Based on MCF Revision 021)

Parameters not part of office check number calculation:

Track 1 : GCP Frequency = 348 Hz
Track 1 : Approach Distance = 2817 ft
Track 1 : Prime Warning Time = 27 sec
Track 1 : GCP Transmit Level = Medium (Set in Field)
Track 1 : Isl Frequency = 10.0 kHz
SSCC 1 : Lamp Neutral Test = Off (Set in Field)
SSCC 2 : Lamp Neutral Test = Off (Set in Field)

Comments

<none>

Configuration Package File

Filename: HAR6885_177018B.pac
Path: C:\Cad_File\UPRR\jxxd00519\documents\gcp program\
Date/Time: 7/22/2009 16:11:13
DT Version: 4.8.5

NEW SHEET

Designed 3/7/08
INSTALL FLASHERS AND GATE WITH CNT AT RP 68.85 WHITE OAKS ROAD
Rev'd: 104,87049
By: CJB
/SSC/CJB

NOTE: Actual OFFSET and ISLAND distances must be verified by field personnel.

UNION PACIFIC
QUALITY PRODUCTIVITY SAFETY
SIGNAL DESIGN

Date:	03/07/08
Dsn:	SSC
Chk:	CJB
AFE:	87049

UNION PACIFIC RAILROAD
HARVARD, ILLINOIS
WHITE OAKS ROAD
HARVARD SUBDIVISION
Office of Sr. AVP Engineering - Signal/TCO Omaha, Nebraska

Sh.:	4A
DOT	177018B
MP:	68.85
ID:	HAR6885.4AX

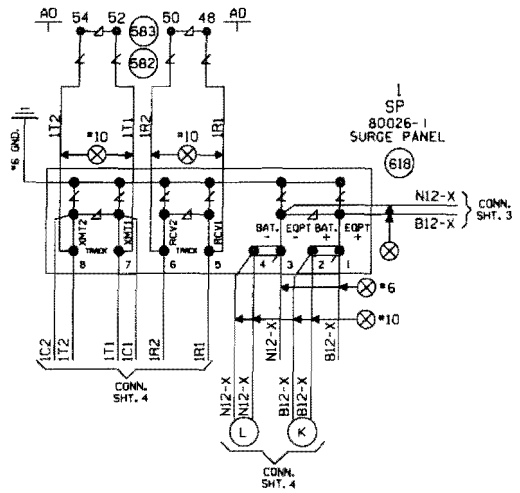

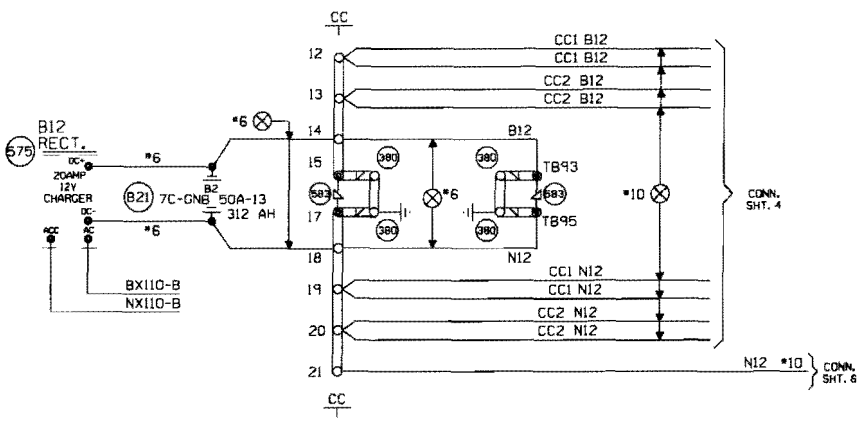

NEW SHEET

Designed: 3/7/08 INSTALL FLASHERS AND GATE WITH CWT AT MP 68.85 WHITE OAKS ROAD Rev#: WO#: 87049 ID: CJB SSC/JJF	MODIFICATION LEVEL		UNION PACIFIC SIGNAL DESIGN	Date: 03/07/08	UNION PACIFIC RAILROAD	Sh.: 5
	Q. A. LAST LEVEL CHECKED	DR		Des: SSC	HARVARD, ILLINOIS	DOT 177018B
	LAST LEVEL MOD THIS TYPICAL	DR		Chk: CJB	WHITE OAKS ROAD	MP: 68.85
	LAST LEVEL BY DESIGNER	DR		AFE: 87049	HARVARD SUBDIVISION	ID: HAR6885.5X
	CHANGED FROM TYPICAL 7	Y			Office of Sr AVP Engineering - Signal/TCO Omaha, Nebraska	

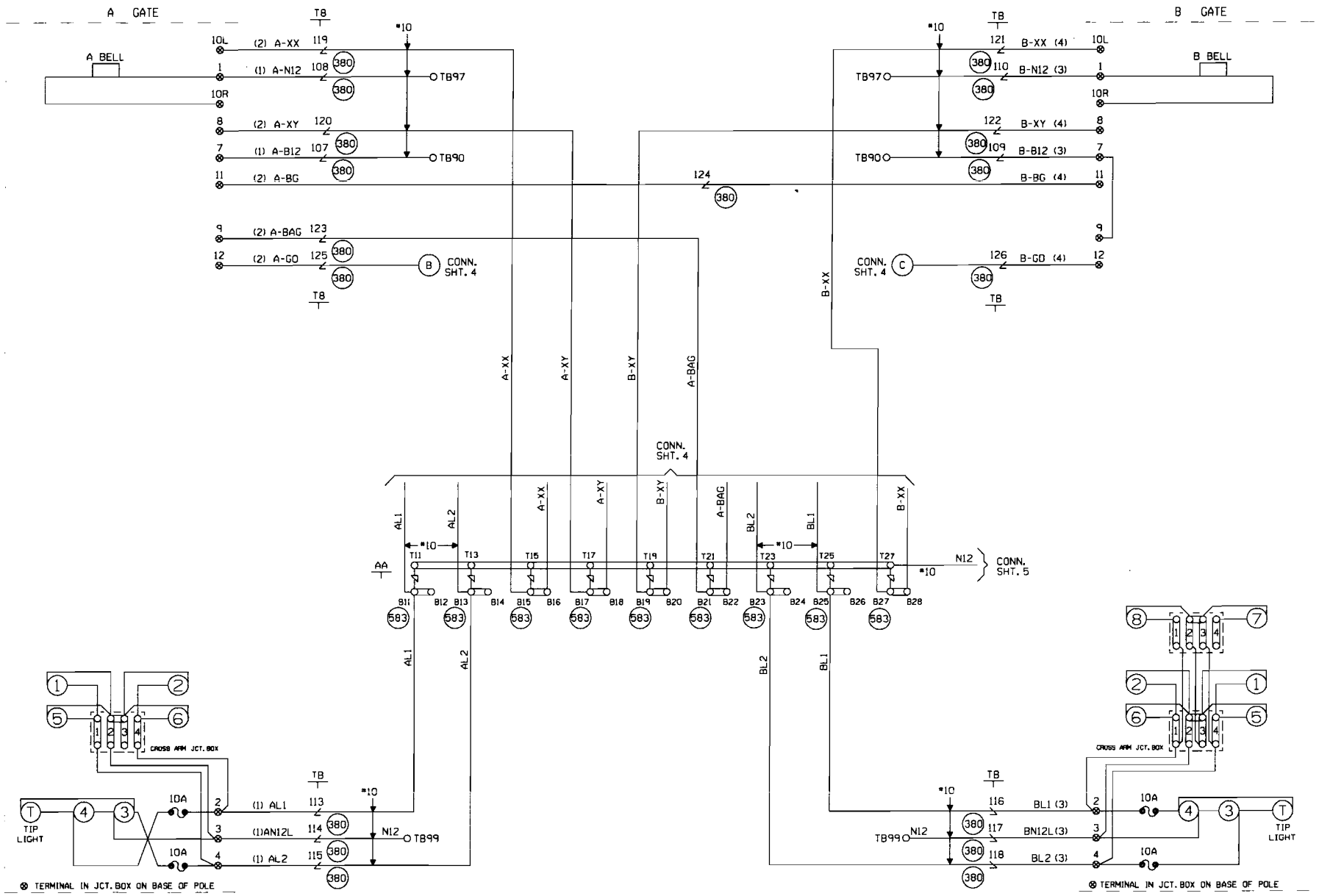

CABLE TABULATION

CABLE NO. 1 5C. NO.6 U.G.B.T.
CABLE NO. 2 7C. NO.14 U.G.B.T.
CABLE NO. 3 5C. NO.6 U.G.B.T.
CABLE NO. 4 7C. NO.14 U.G.B.T.

NEW SHEET

Designed: 3/7/08
INSTALL FLASHERS AND GATE WITH CWT AT N.F.S.S.85 WHITE OAKS ROAD
Rev: WO#:87049
Ck: CJB
/ SSC/JJF

MODIFICATION LEVEL	
D. A. LAST LEVEL CHECKED	DR
LAST LEVEL MOD THIS TYPICAL	DR
LAST LEVEL BY DESIGNER	DR
CHANGED FROM TYPICAL?	Y

UNION PACIFIC
QUALITY PRODUCTIVITY SAFETY
SIGNAL DESIGN

Date:	03/07/08
Des:	SSC
Chk:	CJB
AFE:	87049

UNION PACIFIC RAILROAD

HARVARD, ILLINOIS
WHITE OAKS ROAD
HARVARD SUBDIVISION

Office of Sr AVP Engineering - Signal/TCO Omaha, Nebraska

Sh.:	6
DOT	177018B
MP:	68.85
ID:	HAR6885.6X

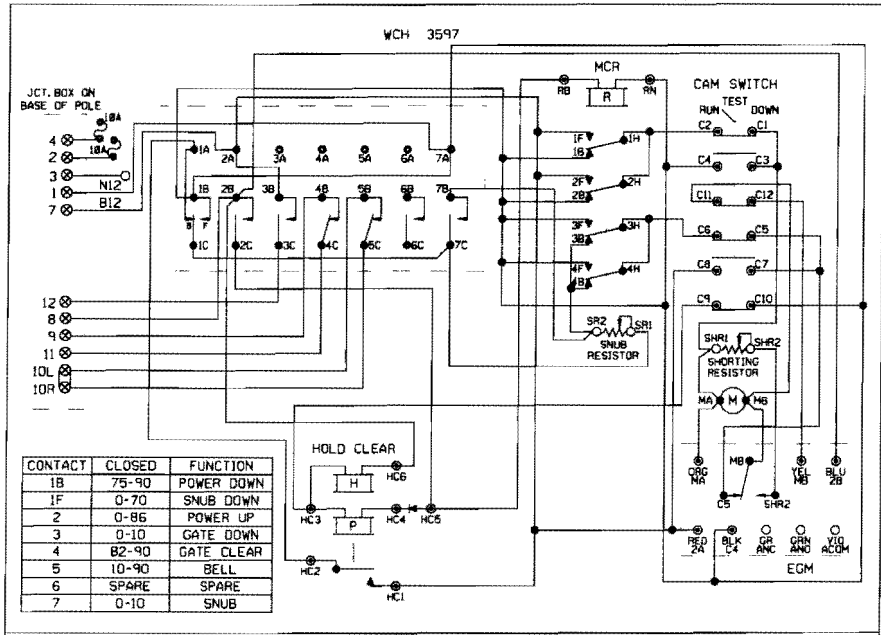

CONTACT	CLOSED	FUNCTION
1B	75-90	POWER DOWN
1F	0-70	SNUB DOWN
2	0-86	POWER UP
3	0-10	GATE DOWN
4	82-90	GATE CLEAR
5	10-90	BELL
6	SPARE	SPARE
7	0-10	SNUB

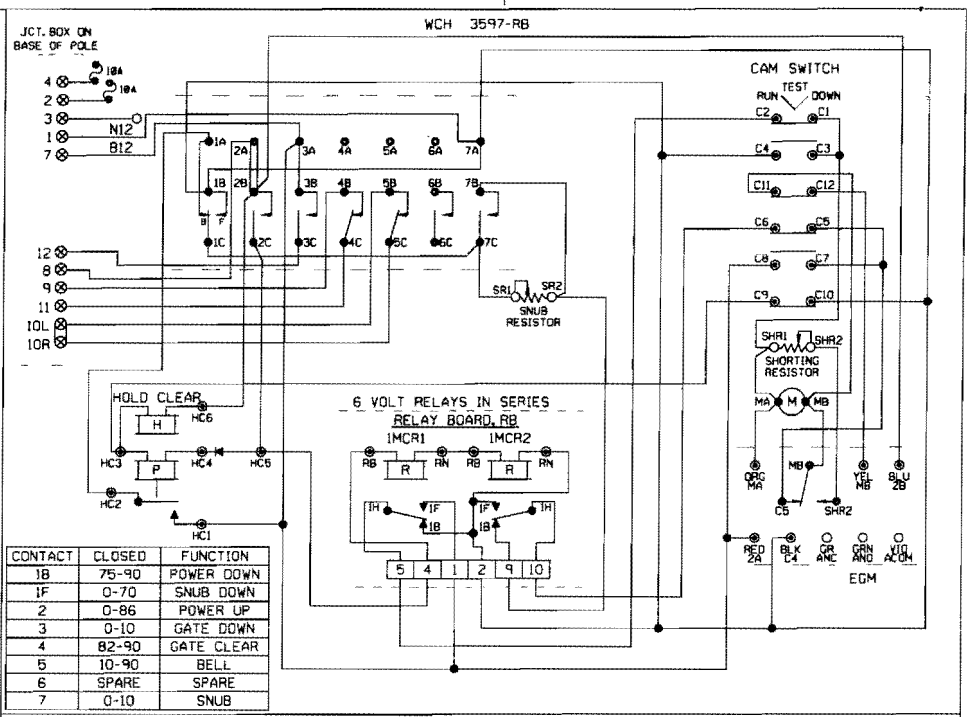

CONTACT	CLOSED	FUNCTION
1B	75-90	POWER DOWN
1F	0-70	SNUB DOWN
2	0-86	POWER UP
3	0-10	GATE DOWN
4	82-90	GATE CLEAR
5	10-90	BELL
6	SPARE	SPARE
7	0-10	SNUB

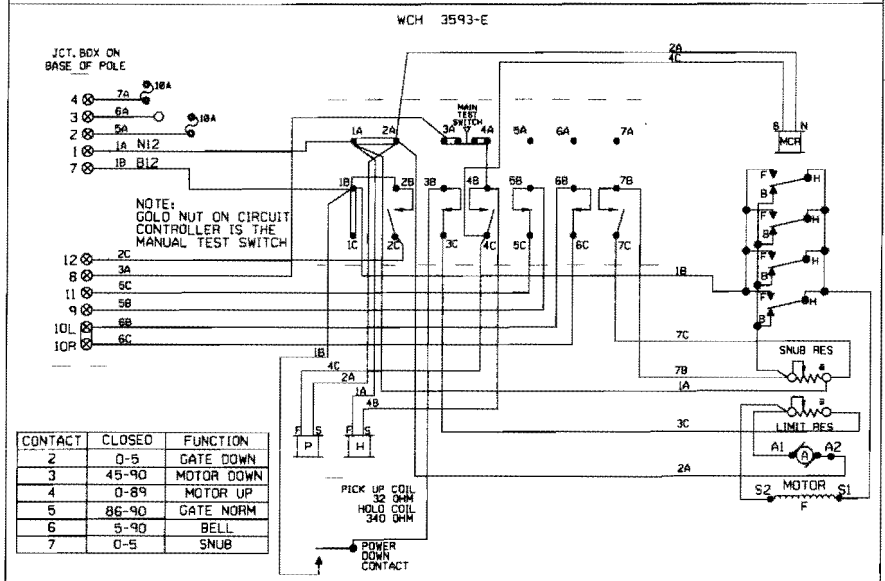

CONTACT	CLOSED	FUNCTION
2	0-5	GATE DOWN
3	45-90	MOTOR DOWN
4	0-89	MOTOR UP
5	86-90	GATE NORM
6	5-90	BELL
7	0-5	SNUB

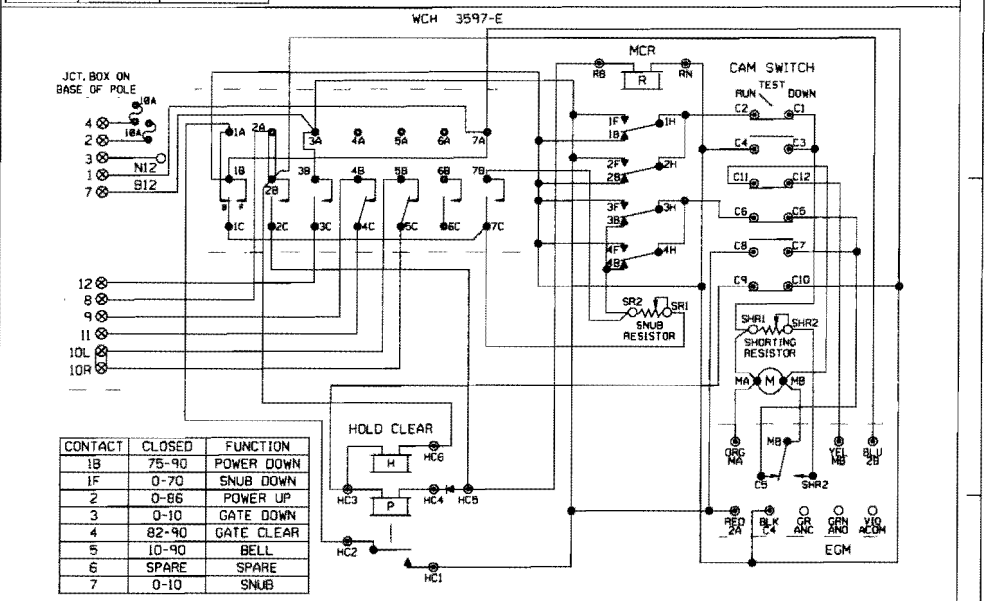

CONTACT	CLOSED	FUNCTION
1B	75-90	POWER DOWN
1F	0-70	SNUB DOWN
2	0-86	POWER UP
3	0-10	GATE DOWN
4	82-90	GATE CLEAR
5	10-90	BELL
6	SPARE	SPARE
7	0-10	SNUB

SHOW TYPE MECH. INSTALLED

ALL MECHANISMS SHOWN IN THE CLEAR POSITION

JCT. BOX ON BASE POLE

L	R	L	R
1	1	7	7
2	2	8	8
3	3	9	9
4	4	10	10
5	5	11	11
6	6	12	12

NEW SHEET

Designed: 3/7/08

INSTALL FLASHERS AND GATE WITH CWT AT MP 68.85 WHITE OAKS ROAD

Rev. No. 87049 CJB SSC/JJB

MODIFICATION LEVEL	
Q.A. LAST LEVEL CHECKED	DR
LAST LEVEL MOD THIS TYPICAL	DR
LAST LEVEL BY DESIGNER	DR
CHANGED FROM TYPICAL?	N

UNION PACIFIC — QUALITY PRODUCTIVITY SAFETY — SIGNAL DESIGN

Date: 03/07/08
Dwn: SSC
Chk: CJB
AFE: 87049

UNION PACIFIC RAILROAD

HARVARD, ILLINOIS
WHITE OAKS ROAD
HARVARD SUBDIVISION

Office of Sr. AVP, Engineering - Signal/TCO — Omaha, Nebraska

Sh.: 7
DOT 177018B
MP: 68.85
ID: HAR6885.7X

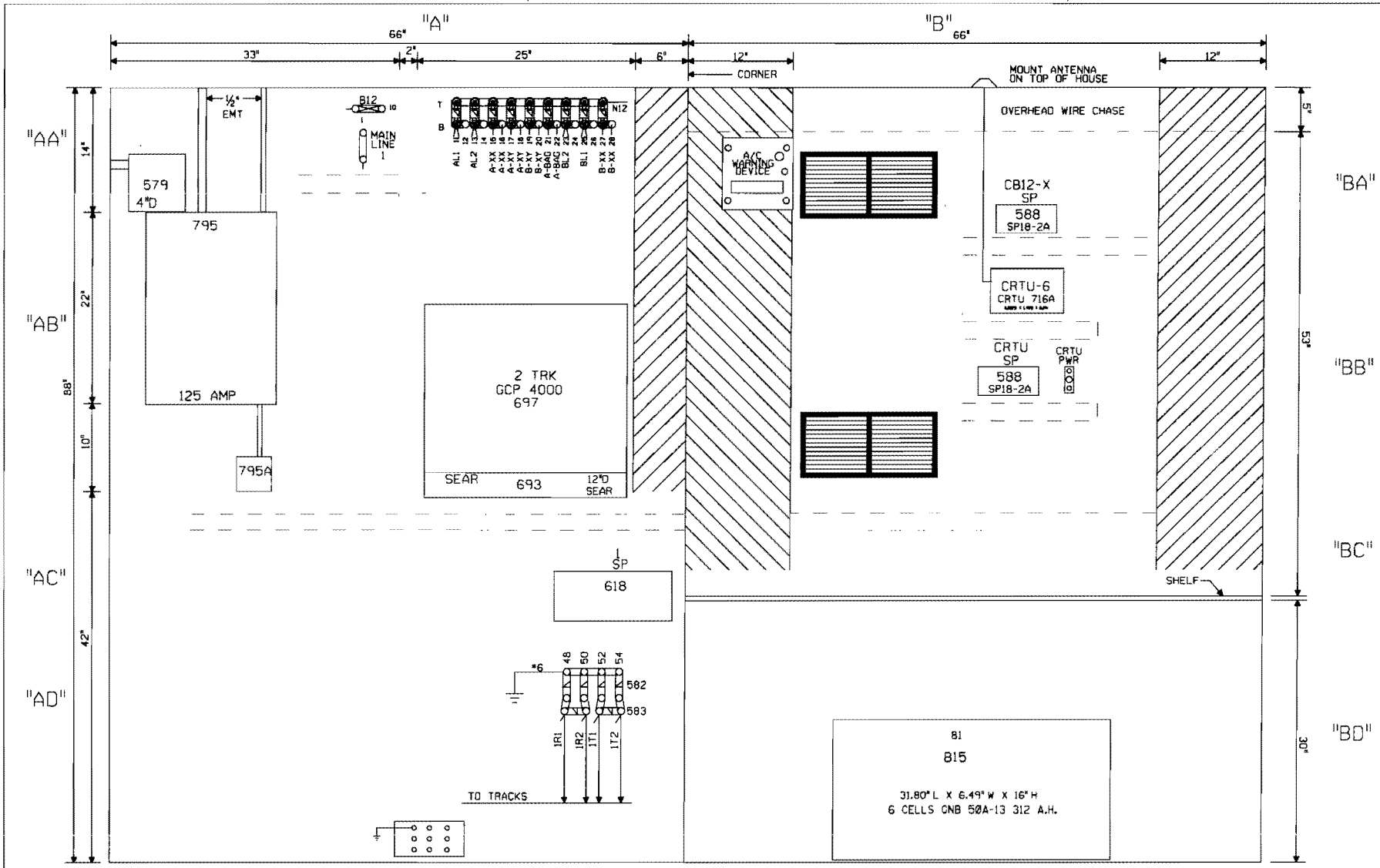

NOTE: ALL DIMENSIONS SHOWN ARE APPROXIMATE.

0 1 2 3 4 FEET

SCALE: 1.5 INCHES = 1 FOOT

NEW SHEET

Designed: 3/7/08 INSTALL FLASHERS AND GATE WITH CWT AT MP 68.85 WHITE OAKS ROAD Rec'd: WO: 87049 Tb: /CJB /SSC/JJF	MODIFICATION LEVEL		UNION PACIFIC SIGNAL DESIGN	Date: 03/07/08	UNION PACIFIC RAILROAD	Sh.: 8
	Q.A. LAST LEVEL CHECKED	DR		Des: SSC	HARVARD, ILLINOIS	DOT 1770188
	LAST LEVEL MOD THIS TYPICAL	DR		Chk: CJB	WHITE OAKS ROAD	MP: 68.85
	LAST LEVEL BY DESIGNER	DR		AFE: 87049	HARVARD SUBDIVISION	ID: HAR6885.8X
	CHANGED FROM TYPICAL?	Y			Office of Sr AVP Engineering - Signal/TCO Omaha, Nebraska	

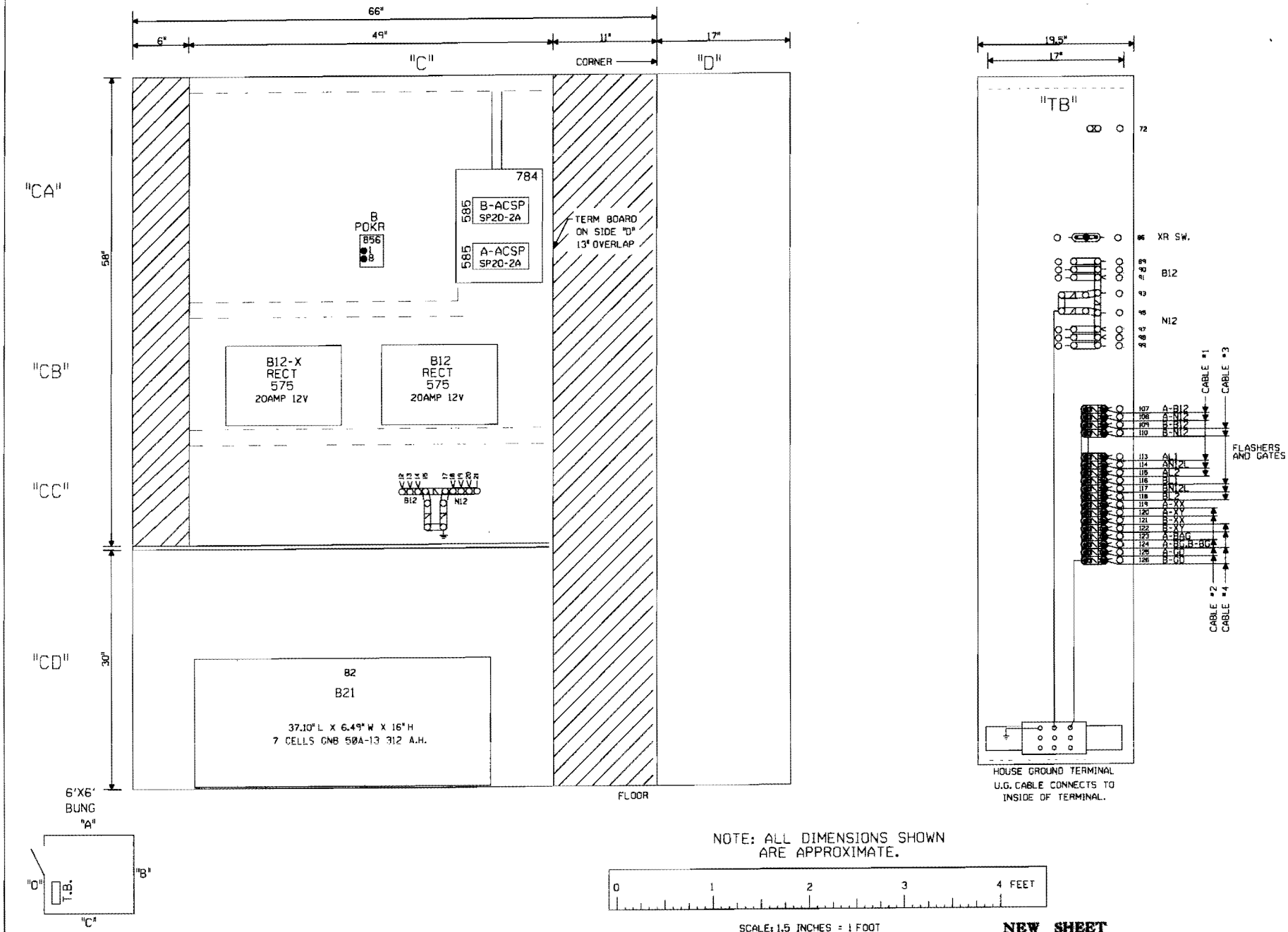

NEW SHEET

MODIFICATION LEVEL	
Q.A. LAST LEVEL CHECKED	DR
LAST LEVEL MOD THIS TYPICAL	DR
LAST LEVEL BY DESIGNER	DR
CHANGED FROM TYPICAL?	Y

INSTALL FLASHERS AND GATE WITH CUT AT MP.68.85 WHITE OAKS ROAD

UNION PACIFIC SIGNAL DESIGN

Date:	03/07/08
Des:	SSC
Chk:	CJB
AFE:	87049

UNION PACIFIC RAILROAD

HARVARD, ILLINOIS
WHITE OAKS ROAD
HARVARD SUBDIVISION

Office of Sr AVP Engineering - Signal/TCO Omaha, Nebraska

Sh.:	9
DOT	1770188
MP:	68.85
ID:	HAR6885.9X