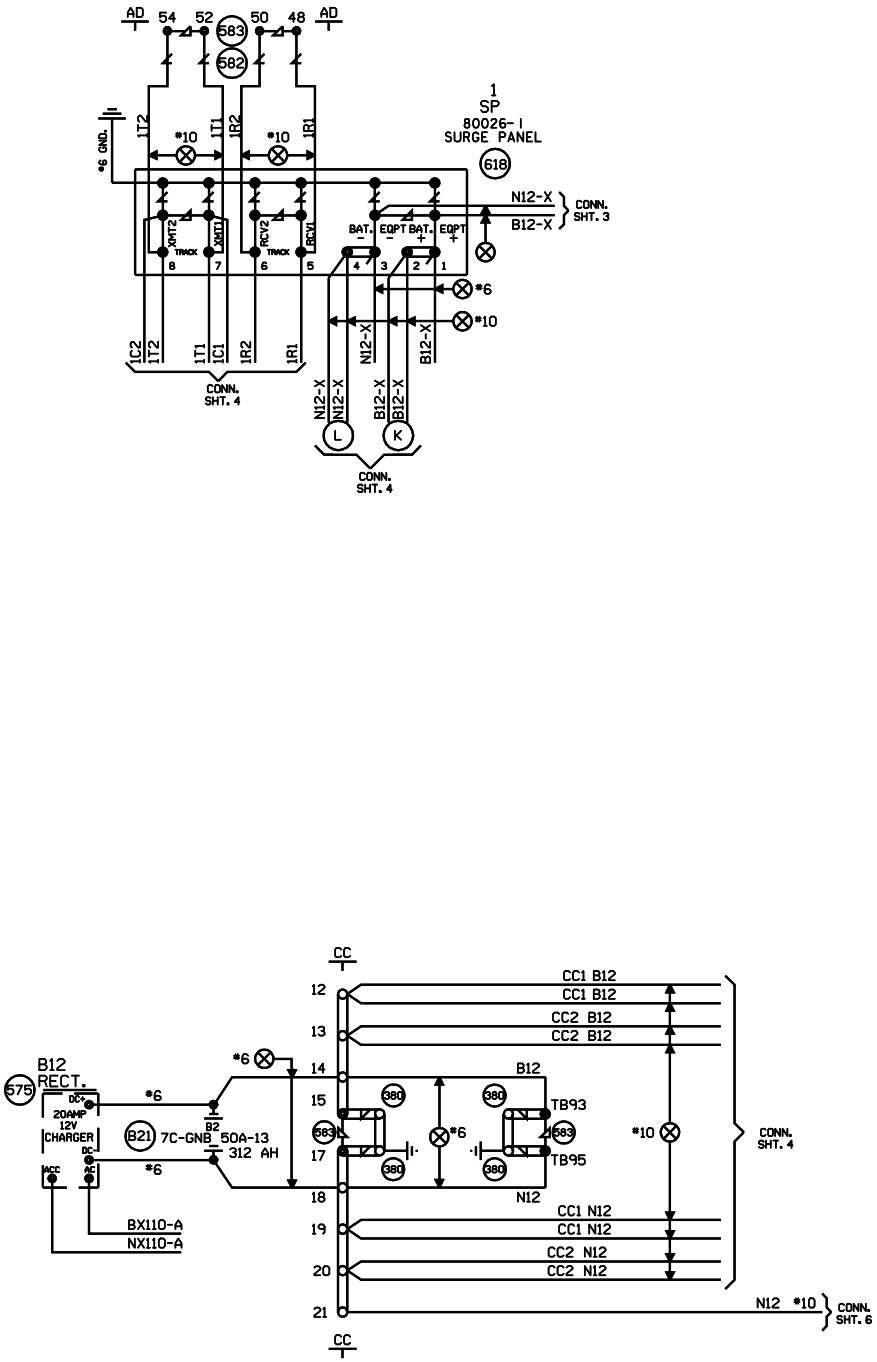

NEW SHEET

					Designed: 3/7/08 INSTALL FLASHERS AND GATE WITH CWT AT M.P.244.93 TR 60 Rec#: WO#: 87294 IS: /CJB /SSC/JJF	MODIFICATION LEVEL		UNION PACIFIC QUALITY PRODUCTIVITY SAFETY SIGNAL DESIGN	Date: 03/07/08 Des: SSC Chk: CJB AFE: 87294	UNION PACIFIC RAILROAD MT. OLIVE, ILLINOIS TR 60 PANA SUBDIVISION Office of Sr AVP Engineering - Signal/TCO Omaha, Nebraska	Sh.: 5 DOT 542181D MP: 244.93 ID: 030224493.5X
						Q.A. LAST LEVEL CHECKED	DR				
						LAST LEVEL MOD THIS TYPICAL	DR				
						LAST LEVEL BY DESIGNER	DR				
						CHANGED FROM TYPICAL?	Y				
						REV 02.01.09 4K 4TKSPGFC.4					

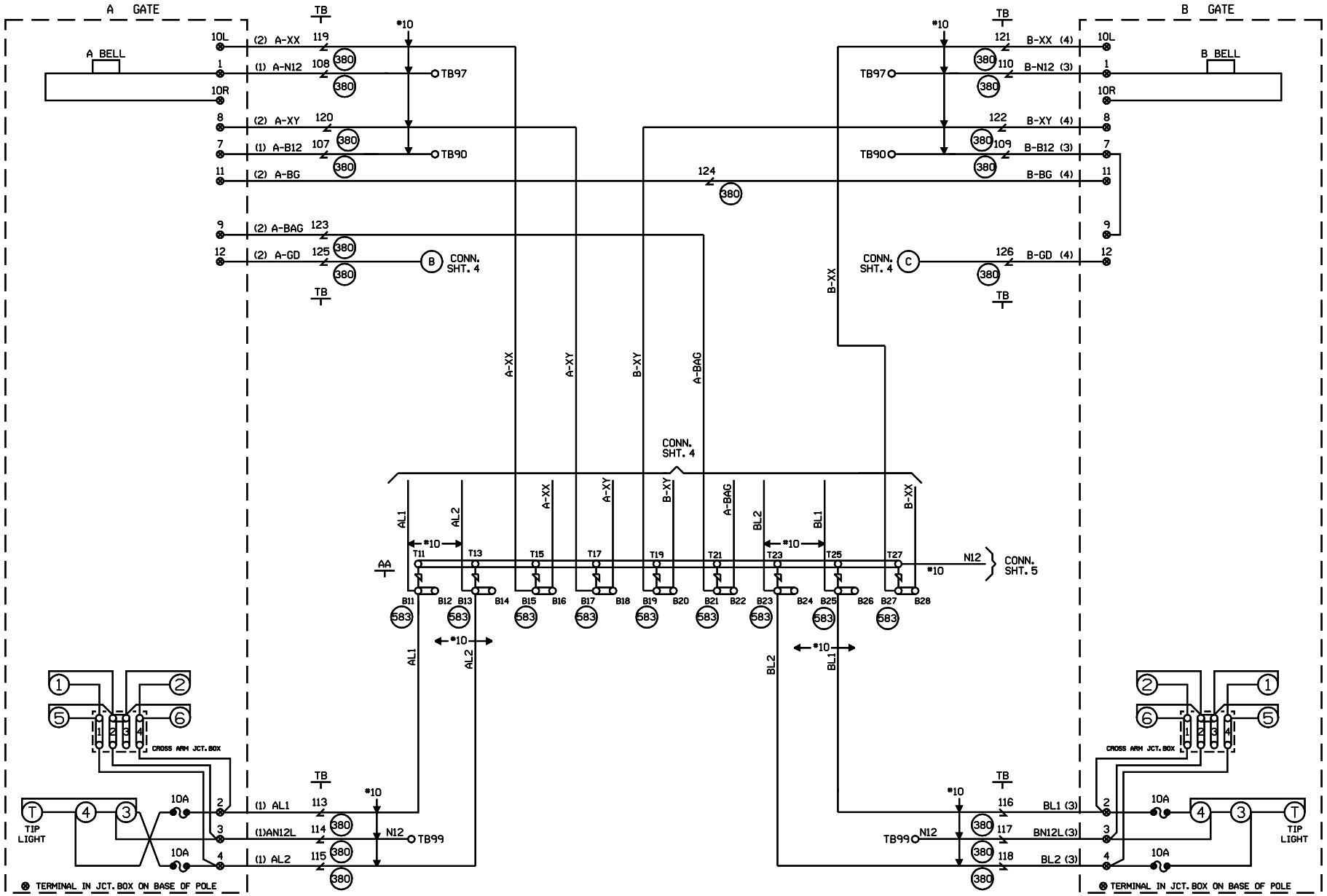

CABLE TABULATION

CABLE NO. 1 5C. NO.6 U.G.B.T.
CABLE NO. 2 7C. NO.14 U.G.B.T.
CABLE NO. 3 5C. NO.6 U.G.B.T.
CABLE NO. 4 7C. NO.14 U.G.B.T.

NEW SHEET

Designed: 3/7/08
INSTALL FLASHERS AND GATE WITH CWT AT M.P.244.93 TR 60
Rec#: WO#: 87294
IS: /CJB /SSC/JJF

MODIFICATION LEVEL	
Q. A. LAST LEVEL CHECKED	DR
LAST LEVEL MOD THIS TYPICAL	DR
LAST LEVEL BY DESIGNER	DR
CHANGED FROM TYPICAL?	Y

REV 02.01.09 4K QFCTYP.5

UNION PACIFIC
QUALITY PRODUCTIVITY SAFETY
SIGNAL DESIGN

Date: 03/07/08
Des: SSC
Chk: CJB
AFE: 87294

UNION PACIFIC RAILROAD

MT. OLIVE, ILLINOIS
TR 60
PANA SUBDIVISION

Office of Sr AVP Engineering - Signal/TCO Omaha, Nebraska

Sh.: 6
DOT 542181D
MP: 244.93
ID: 030224493.6X

WCH 3597

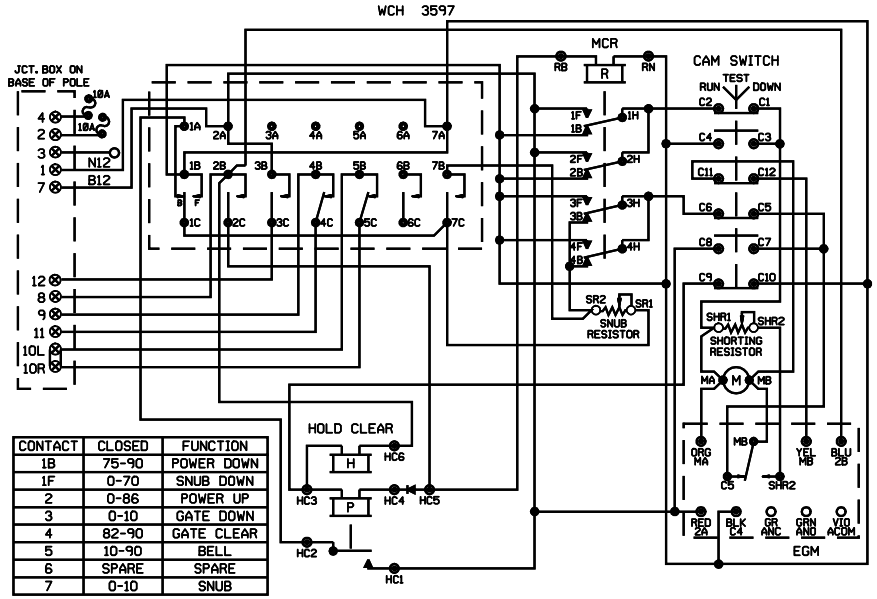

CONTACT	CLOSED	FUNCTION
1B	75-90	POWER DOWN
1F	0-70	SNUB DOWN
2	0-86	POWER UP
3	0-10	GATE DOWN
4	82-90	GATE CLEAR
5	10-90	BELL
6	SPARE	SPARE
7	0-10	SNUB

WCH 3597-RB

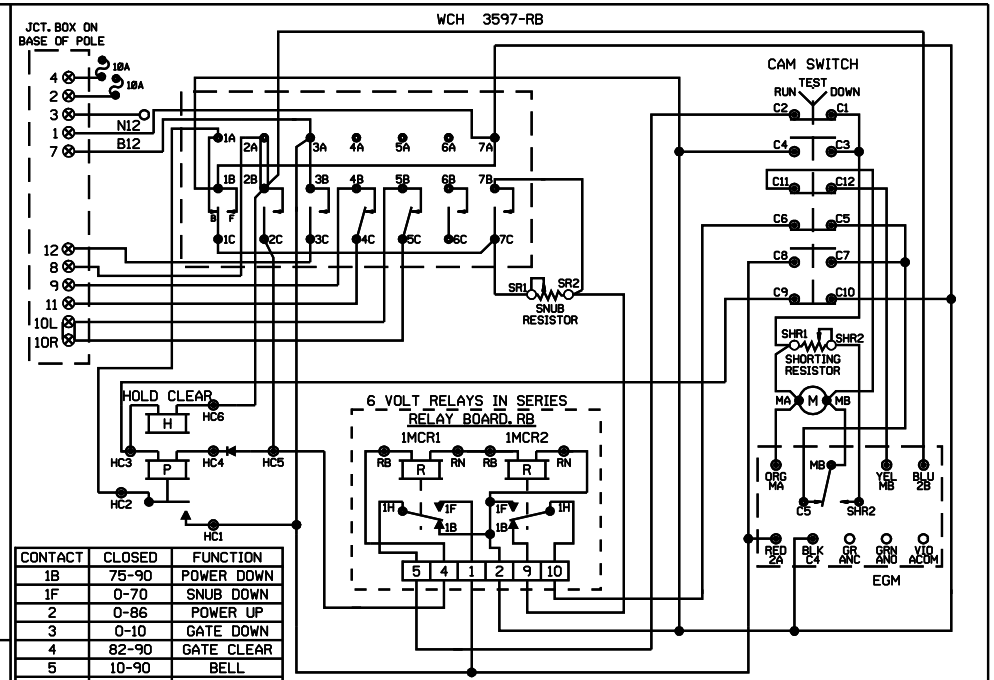

CONTACT	CLOSED	FUNCTION
1B	75-90	POWER DOWN
1F	0-70	SNUB DOWN
2	0-86	POWER UP
3	0-10	GATE DOWN
4	82-90	GATE CLEAR
5	10-90	BELL
6	SPARE	SPARE
7	0-10	SNUB

WCH 3593-E

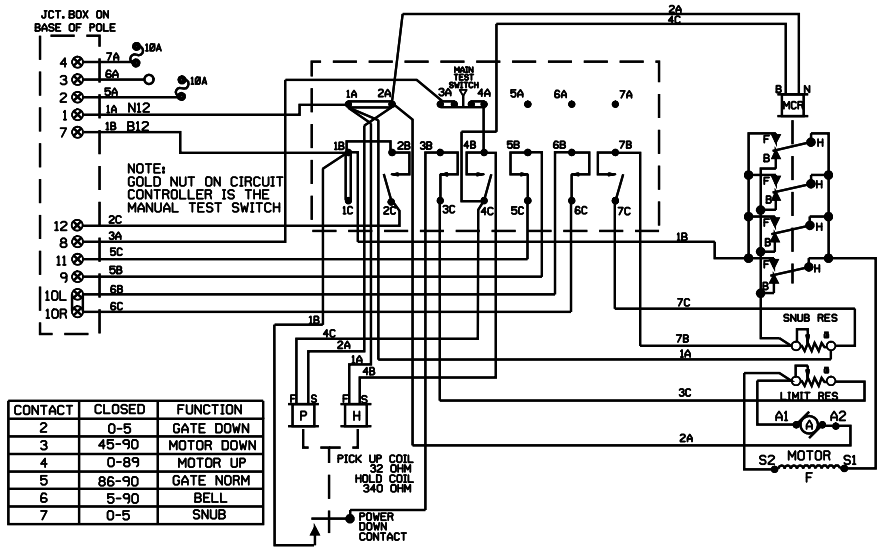

CONTACT	CLOSED	FUNCTION
2	0-5	GATE DOWN
3	45-90	MOTOR DOWN
4	0-89	MOTOR UP
5	86-90	GATE NORM
6	5-90	BELL
7	0-5	SNUB

WCH 3597-E

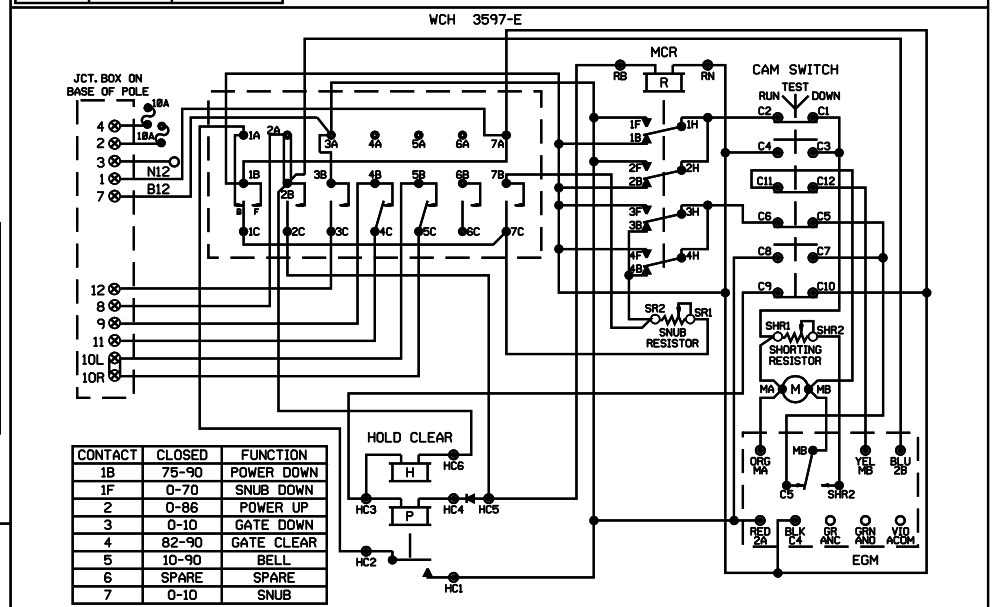

CONTACT	CLOSED	FUNCTION
1B	75-90	POWER DOWN
1F	0-70	SNUB DOWN
2	0-86	POWER UP
3	0-10	GATE DOWN
4	82-90	GATE CLEAR
5	10-90	BELL
6	SPARE	SPARE
7	0-10	SNUB

SHOW TYPE MECH. INSTALLED

ALL MECHANISMS SHOWN IN THE CLEAR POSITION

JCT. BOX ON BASE POLE

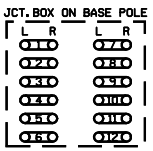

NEW SHEET

Designed: 3/7/08

INSTALL FLASHERS AND GATE WITH CWT AT M.P.244.93 TR 60

Rec#: WO#: 87294
IS: /CJB /SSC/JJF

MODIFICATION LEVEL	
Q.A. LAST LEVEL CHECKED	DR
LAST LEVEL MOD THIS TYPICAL	DR
LAST LEVEL BY DESIGNER	DR
CHANGED FROM TYPICAL?	N

REV 02.01.09 4K GWIRING.7

UNION PACIFIC
QUALITY PRODUCTIVITY SAFETY
SIGNAL DESIGN

Date: 03/07/08
Des: SSC
Chk: CJB
AFE: 87294

UNION PACIFIC RAILROAD

MT. OLIVE, ILLINOIS
TR 60
PANA SUBDIVISION

Office of Sr AVP Engineering - Signal/TCO Omaha, Nebraska

Sh.: 7
DOT 542181D
MP: 244.93
ID: 030224493.7X

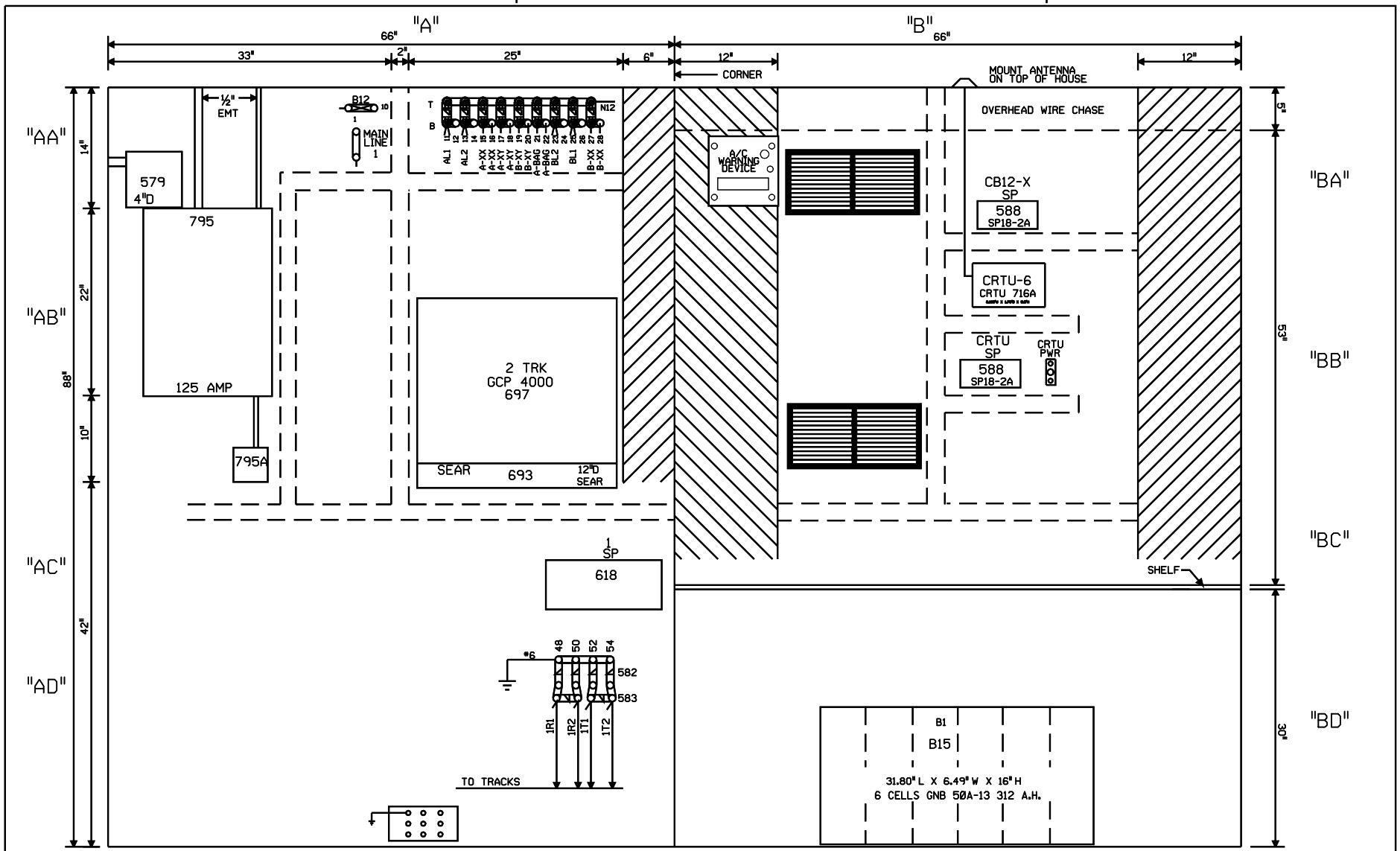

NOTE: ALL DIMENSIONS SHOWN ARE APPROXIMATE.

0 1 2 3 4 FEET

SCALE: 1.5 INCHES = 1 FOOT

NEW SHEET

Designed: 3/7/08 INSTALL FLASHERS AND GATE WITH CWT AT M.P.244.93 TR 60 Rec#: WO#: 87294 IS: /CJB /SSC/JJF	MODIFICATION LEVEL		UNION PACIFIC QUALITY PRODUCTIVITY SAFETY SIGNAL DESIGN	Date: 03/07/08 Des: SSC Chk: CJB AFE: 87294	UNION PACIFIC RAILROAD MT. OLIVE, ILLINOIS TR 60 PANA SUBDIVISION Office of Sr AVP Engineering - Signal/TCO Omaha, Nebraska	Sh.: 8 DOT 542181D MP: 244.93 ID: 030224493.8X
	Q. A. LAST LEVEL CHECKED	DR				
	LAST LEVEL MOD THIS TYPICAL	DR				
	LAST LEVEL BY DESIGNER	DR				
	CHANGED FROM TYPICAL?	Y				
	mv 02.01.09 4K 4TKGFC.8					

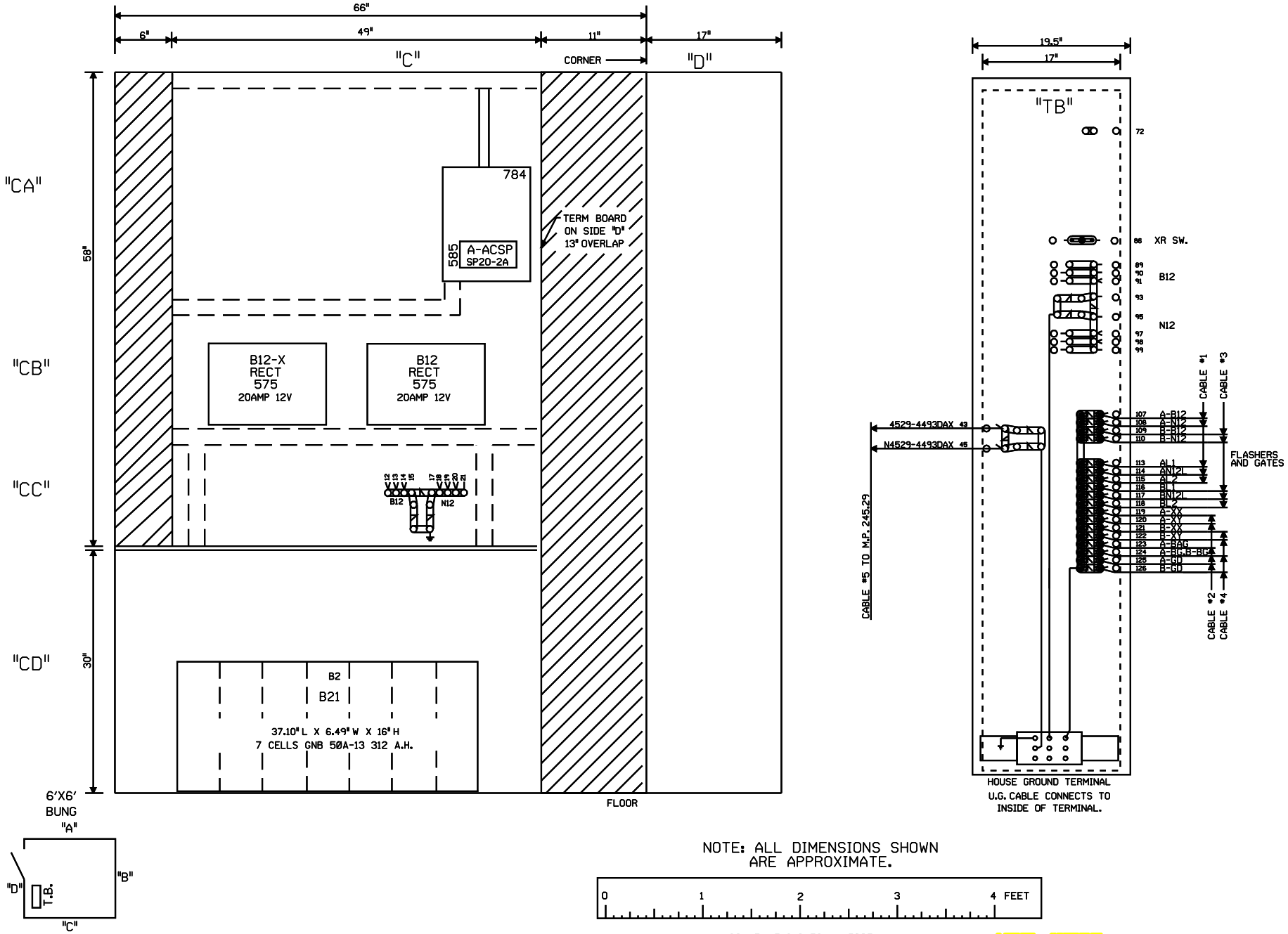

NEW SHEET

Designed: 3/7/08 INSTALL FLASHERS AND GATE WITH CWT AT M.P.244.93 TR 60 Rec#: WO#: 87294 IS: /CJB /SSC/JJF	MODIFICATION LEVEL Q. A. LAST LEVEL CHECKED DR LAST LEVEL MOD THIS TYPICAL DR LAST LEVEL BY DESIGNER DR CHANGED FROM TYPICAL? Y mv 02.01.09 4K GFC.9	UNION PACIFIC QUALITY PRODUCTIVITY SAFETY SIGNAL DESIGN	Date: 03/07/08 Des: SSC Chk: CJB AFE: 87294	UNION PACIFIC RAILROAD MT. OLIVE, ILLINOIS TR 60 PANA SUBDIVISION Office of Sr AVP Engineering - Signal/TCO Omaha, Nebraska	Sh.: 9 DOT 542181D MP: 244.93 ID: 030224493.9X			

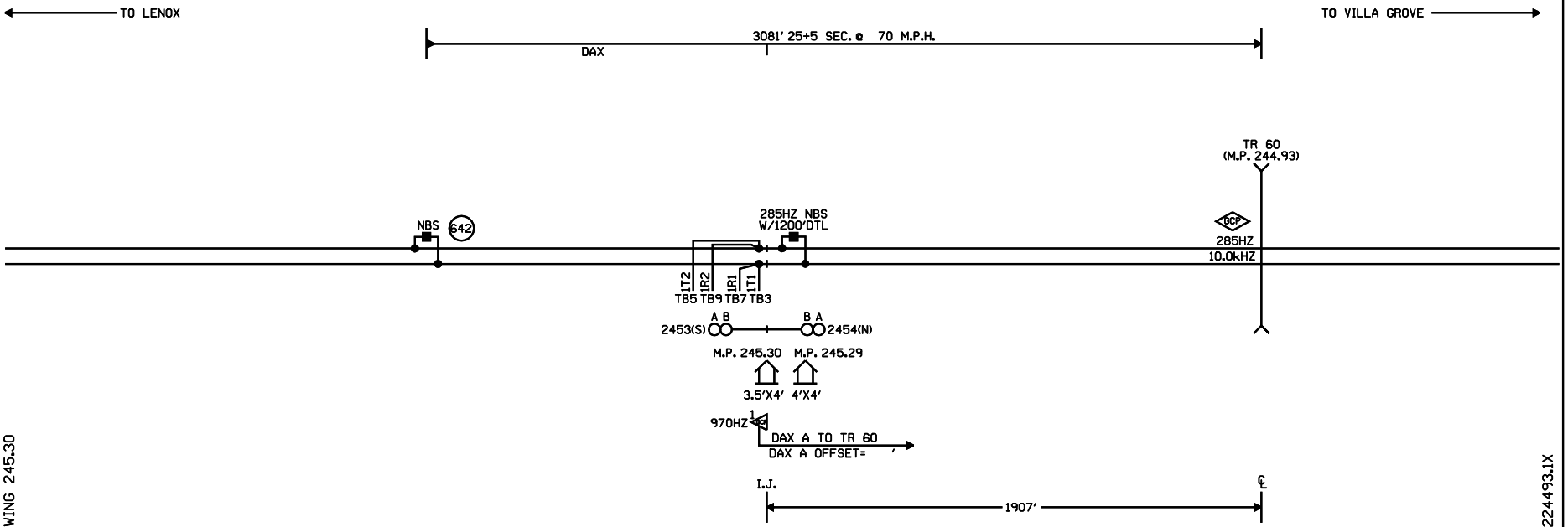

CONSTRUCTION NOTE:

1. THIS WORK TO BE DONE IN CONJUNCTION WITH CROSSING WORK AT M.P. 244.93

NOTES:

⊗ = TWISTED WIRES
ALL TRACK WIRES 2C. #6
INSULATED 1 TWIST PER FT.

TRANSMITTER AND RECEIVER LEADS
TO BE SEPARATED BY AT LEAST 12" IN TRENCH,
LENGTHS SHOULD NOT EXCEED MANUFACTURES
RECOMMENDATION.

ALL BUNGALOW WIRING TO BE #16 AWG FLEX
UNLESS OTHERWISE SPECIFIED EXCEPT ALL GROUND
WIRE TO BE #6 AWG FLEX OR LARGER.

REFER TO UP STANDARD DWG. FOR BUNGALOW
GROUNDING.

PORTABLE GENERATOR EXTENSION CORD
FOR 240V TO 240V IS PROVIDED AS WELL
AS A 120V TO 240V ADAPTER.

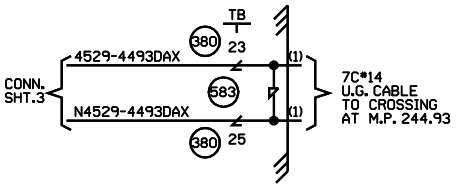

W(S) ← → E(N)

CABLE TABULATION

CABLE #1 7C*14 U.G.B.T. HOUSE TO MP. 244.93

NEW SHEET

					Designed: 3/7/08 INSTALL FLASHERS AND GATE WITH CWT AT M.P.244.93 TR 60 Rec#: WO#: 87294 IS: /CJB /SSC/JJF	MODIFICATION LEVEL		UNION PACIFIC QUALITY PRODUCTIVITY SAFETY SIGNAL DESIGN	Date: 03/07/08 Des: SSC Chk: GRK AFE: 87294	UNION PACIFIC RAILROAD MT. OLIVE, ILLINOIS REMOTE LOCATION PANA SUBDIVISION Office of Sr AVP Engineering - Signal/TCO Omaha, Nebraska	Sh.: 1 DOT 000000R MP: 245.29 ID: 030224529.1X
						Q.A. LAST LEVEL CHECKED	DR			
						LAST LEVEL MOD THIS TYPICAL	DR			
						LAST LEVEL BY DESIGNER	DR			
						CHANGED FROM TYPICAL?	Y			
						REV 02.01.09 4K REMOTE.1				

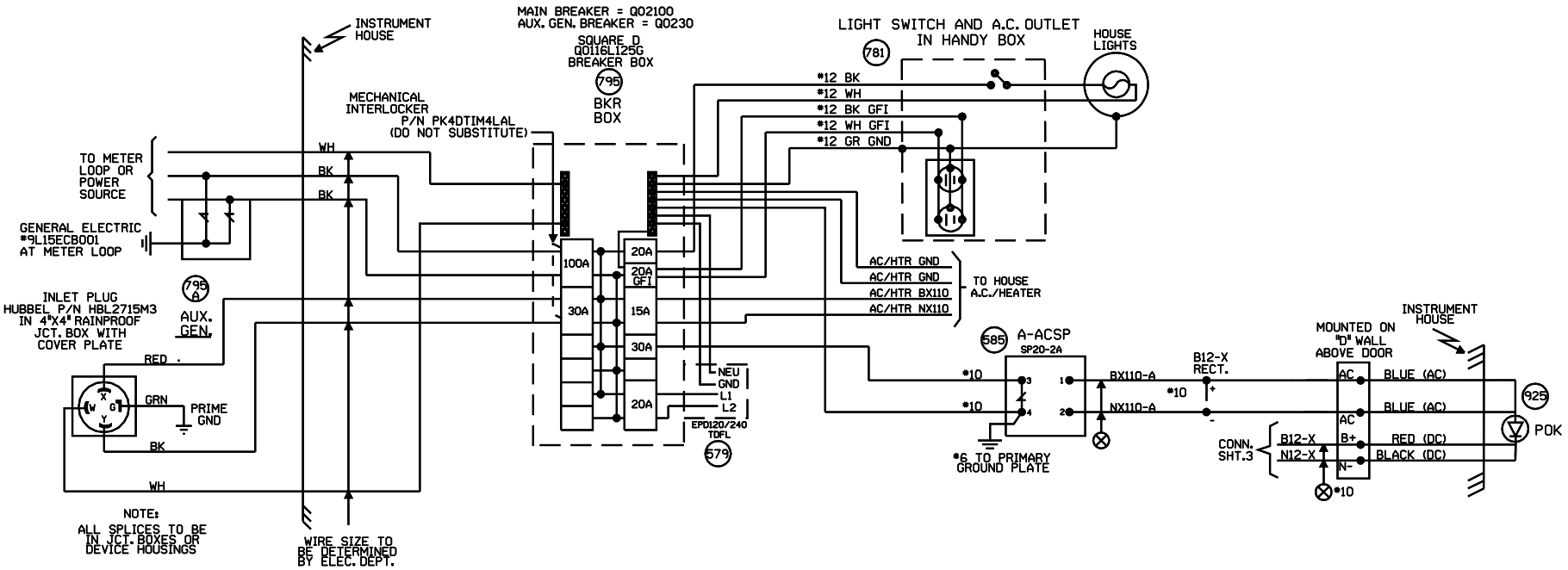

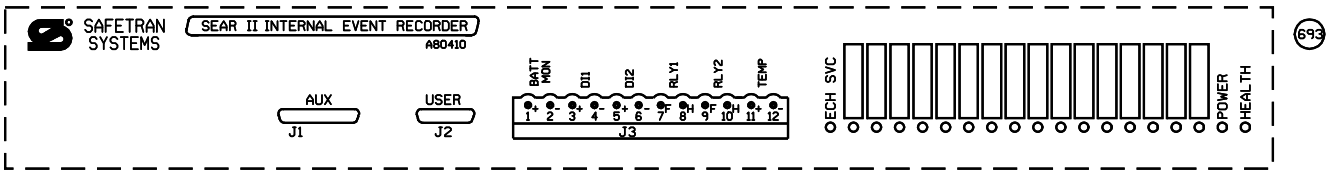

NEW SHEET

					Designed: 3/7/08 INSTALL FLASHERS AND GATE WITH CWT AT M.P.244.93 TR 60 Rec#: WO#: 87294 IS: /CJB /SSC/JJF	MODIFICATION LEVEL Q.A. LAST LEVEL CHECKED DR LAST LEVEL MOD THIS TYPICAL DR LAST LEVEL BY DESIGNER DR CHANGED FROM TYPICAL? Y REV 02.01.09 4K SEARAC.2	UNION PACIFIC QUALITY PRODUCTIVITY SAFETY SIGNAL DESIGN	Date: 03/07/08 Des: SSC Chk: CJB AFE: 87294	UNION PACIFIC RAILROAD MT. OLIVE, ILLINOIS REMOTE LOCATION PANA SUBDIVISION Office of Sr AVP Engineering - Signal/TCO Omaha, Nebraska	Sh.: 2 DOT 000000R MP: 245.29 ID: 030224529.2X

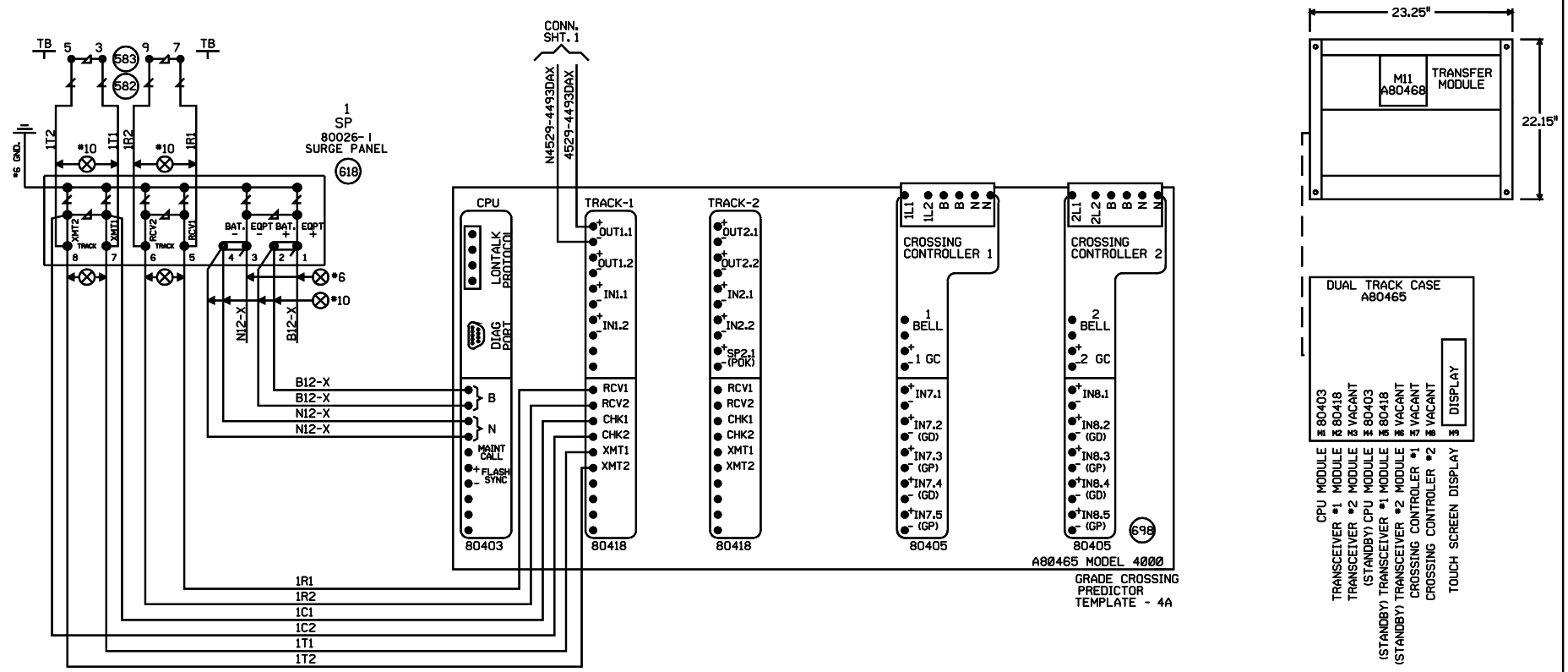

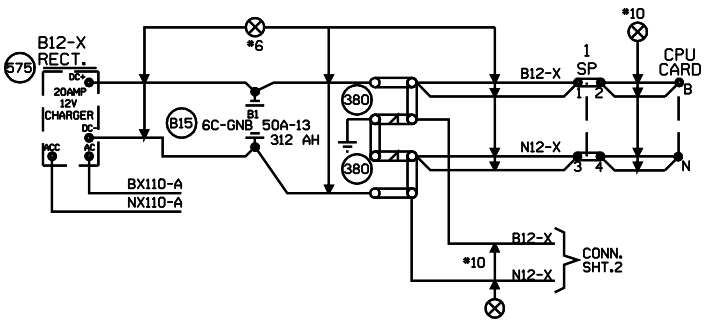

"Mf" FREQUENCY (HZ)	MAXIMUM TRANSMIT WIRE LENGTH (FEET)
86	100
114	125
156	150
211	200
285-970	250

NOTE:
EACH TRANSMITTER TO RAIL WIRE FROM XMT1 AND XMT2 MUST NOT EXCEED THE MAXIMUM LENGTH SPECIFIED IN THE TABLE SHOWN. THE RECEIVER WIRE

NEW SHEET

Designed: 3/7/08
INSTALL FLASHERS AND GATE WITH CWT AT M.P.244.93 TR 60
Rec#: WO#: 87294
IS: /CJB /SSC/JJF

MODIFICATION LEVEL	
Q.A. LAST LEVEL CHECKED	DR
LAST LEVEL MOD THIS TYPICAL	DR
LAST LEVEL BY DESIGNER	DR
CHANGED FROM TYPICAL?	Y

REV 02.01.09 4K 2TKGF.3

UNION PACIFIC
QUALITY PRODUCTIVITY SAFETY
SIGNAL DESIGN

Date: 03/07/08
Des: SSC
Chk: CJB
AFE: 87294

UNION PACIFIC RAILROAD

MT. OLIVE, ILLINOIS
REMOTE LOCATION
PANA SUBDIVISION

Office of Sr AVP Engineering - Signal/TCO Omaha, Nebraska

Sh.: 3
DOT 000000R
MP: 245.29
ID: 030224529.3X

Minimum Program Steps Report

Location and SIN

DOT Number: 000000R
Milepost Number: 245.29
Site Name: OLIVE, IL

SIN: 762010010016 *

* Parameter is part of office check number calculation.

MCF and Template Selection

MCF Name: GCP-T6X-02-1.mcf
MCF Revision: 021
MCFCRC: 6076E435

Template = 4A:6 Remotes *

* Parameter is part of office check number calculation.

Minimum Program Steps

TEMPLATE: track 1-Remote Dax
Track 1 : GCP Frequency = 970 Hz
Track 1 : Approach Distance = 1236 ft
Track 1 : Dax A Warning Time = 25 sec
Track 1 : Dax A Offset Distance = 1845 ft
Track 1 : GCP Transmit Level = Medium (Set in Field)

TEMPLATE: track Anding
AND 1 XR Used = No *

TEMPLATE: OP assignment 1
OUT 1.1 = T1 Dax A *

* Parameter is part of office check number calculation.

Check Numbers

Office Check No. (DT 4.6.0): 04A42209
Office Check Number: 04A42209
Config. Check Number: 0A4EF062
(Based on MCF Revision 021)

Parameters not part of office check number calculation:

Track 1 : GCP Frequency = 970 Hz
Track 1 : Approach Distance = 1236 ft
Track 1 : Dax A Warning Time = 25 sec
Track 1 : Dax A Offset Distance = 1845 ft
Track 1 : GCP Transmit Level = Medium (Set in Field)

Comments

<none>

Configuration Package File

Filename: 030224529 000000R.pac
Path: C:\Cad File\UPRR\jxxd00522\documents\gcp program\
Date/Time: 7/22/2009 7:20:00
DT Version: 4.8.5

NEW SHEET

				Designed: 3/7/08 INSTALL FLASHERS AND GATE WITH CWT AT M.P.244.93 TR 60 Rec#: WO#: 87294 IS: /CJB / /SSC/JJF	NOTE: Actual OFFSET and ISLAND distances must be verified by field personnel.	UNION PACIFIC QUALITY PRODUCTIVITY SAFETY SIGNAL DESIGN	Date: 03/07/08 Des: SSC Chk: CJB AFE: 87294	UNION PACIFIC RAILROAD MT. OLIVE, ILLINOIS REMOTE LOCATION PANA SUBDIVISION Office of Sr AVP Engineering - Signal/TCO Omaha, Nebraska	Sh.: 3A DOT 000000R MP: 245.29 ID: 030224529.3AX

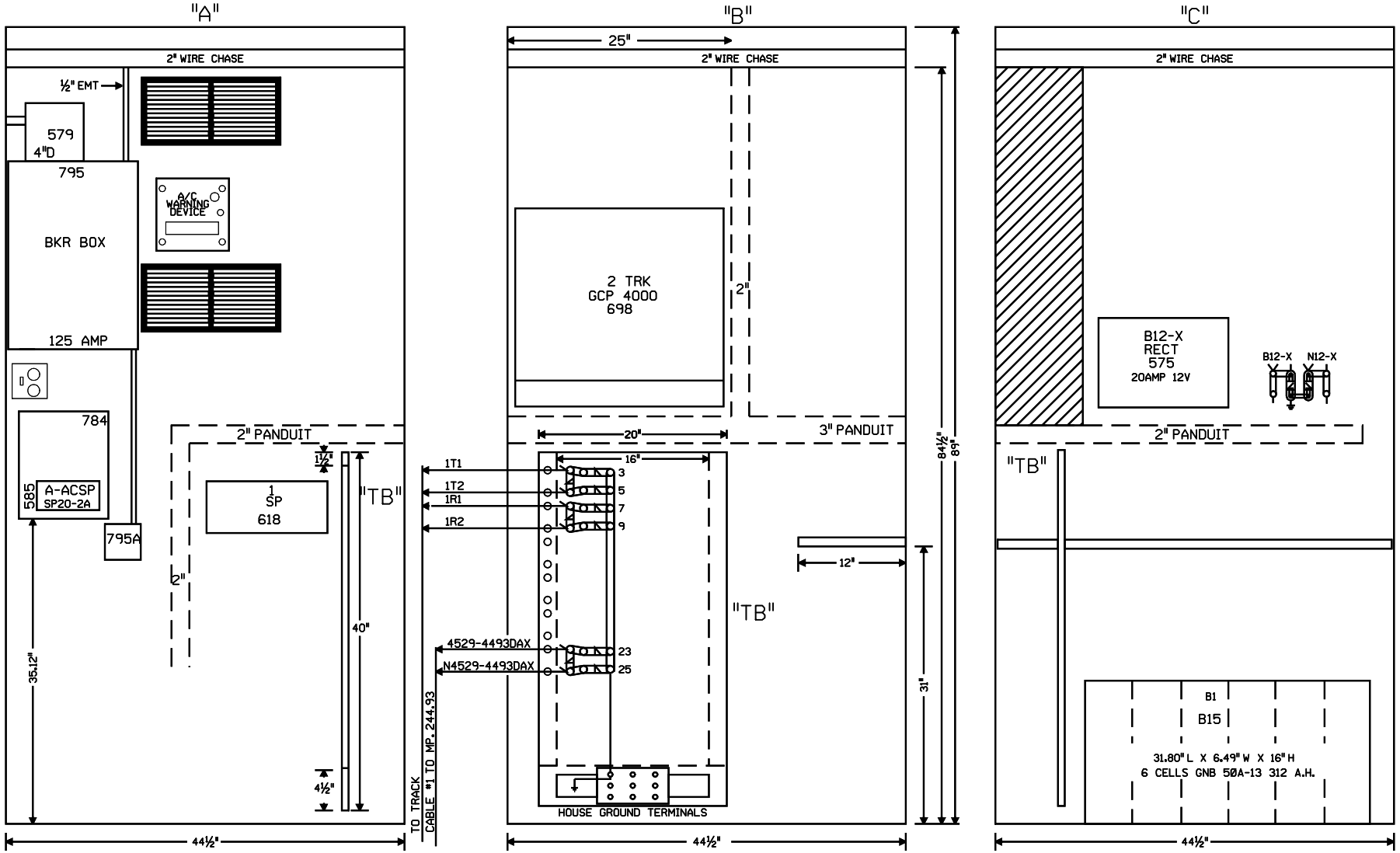

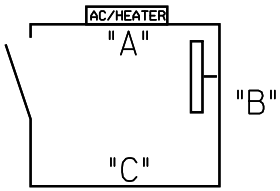

NOTE: ALL DIMENSIONS SHOWN ARE APPROXIMATE.

0 1 2 3 4 FEET

SCALE: 1.5 INCHES = 1 FOOT

NEW SHEET

Designed: 3/7/08

INSTALL FLASHERS AND GATE WITH CWT AT M.P.244.93 TR 60

Rec#: WO#: 87294
IS: /CJB /SSC/JJF

MODIFICATION LEVEL	
Q. A. LAST LEVEL CHECKED	DR
LAST LEVEL MOD THIS TYPICAL	DR
LAST LEVEL BY DESIGNER	DR
CHANGED FROM TYPICAL?	Y

mv 02.01.09 4K REMOTE.5

UNION PACIFIC
QUALITY PRODUCTIVITY SAFETY
SIGNAL DESIGN

Date: 03/07/08
Des: SSC
Chk: CJB
AFE: 87294

UNION PACIFIC RAILROAD

MT. OLIVE, ILLINOIS
REMOTE LOCATION
PANA SUBDIVISION

Office of Sr AVP Engineering - Signal/TCO Omaha, Nebraska

Sh.: 4
DOT 000000R
MP: 245.29
ID: 030224529.4X