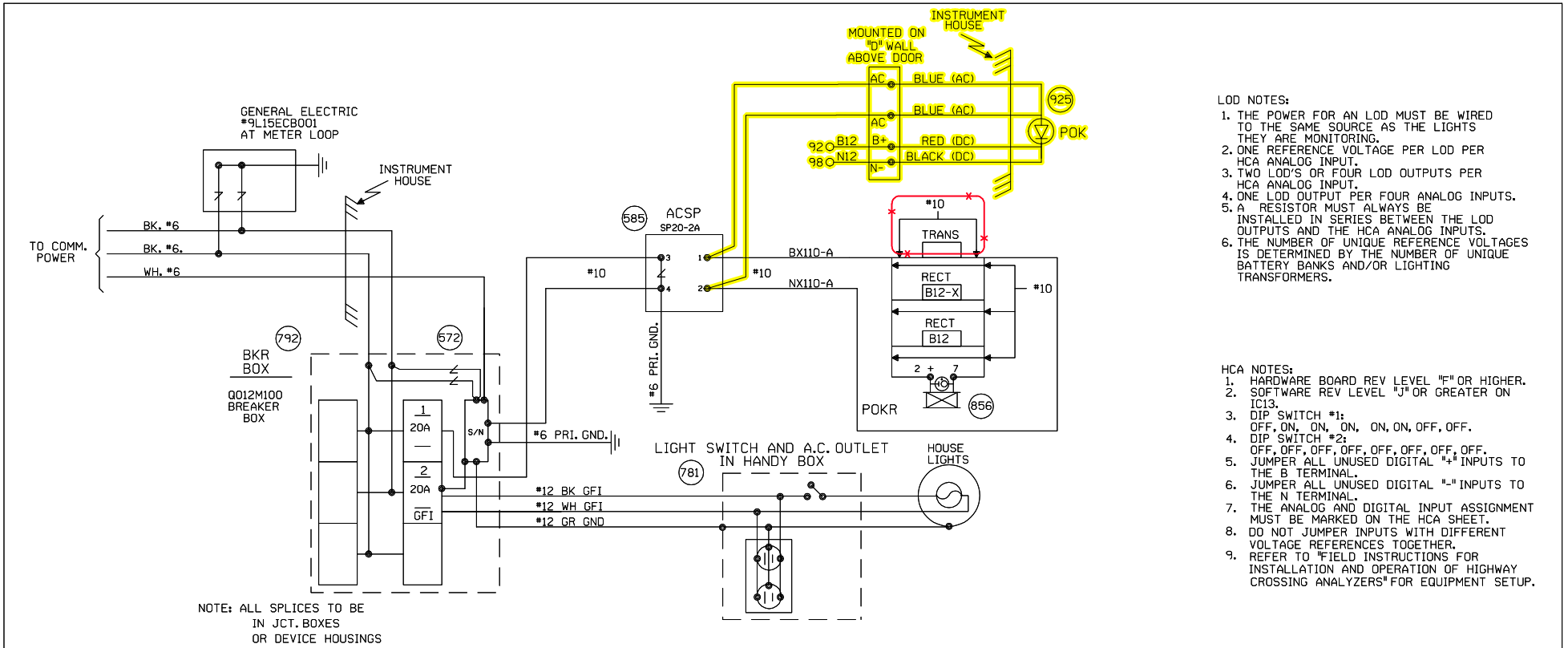

LOD NOTES:

1. THE POWER FOR AN LOD MUST BE WIRED TO THE SAME SOURCE AS THE LIGHTS THEY ARE MONITORING.
2. ONE REFERENCE VOLTAGE PER LOD PER HCA ANALOG INPUT.
3. TWO LOD'S OR FOUR LOD OUTPUTS PER HCA ANALOG INPUT.
4. ONE LOD OUTPUT PER FOUR ANALOG INPUTS.
5. A RESISTOR MUST ALWAYS BE INSTALLED IN SERIES BETWEEN THE LOD OUTPUTS AND THE HCA ANALOG INPUTS.
6. THE NUMBER OF UNIQUE REFERENCE VOLTAGES IS DETERMINED BY THE NUMBER OF UNIQUE BATTERY BANKS AND/OR LIGHTING TRANSFORMERS.

HCA NOTES:

1. HARDWARE BOARD REV LEVEL "F" OR HIGHER.
2. SOFTWARE REV LEVEL "J" OR GREATER ON IC13.
3. DIP SWITCH #1: OFF, ON, ON, ON, ON, ON, OFF, OFF.
4. DIP SWITCH #2: OFF, OFF, OFF, OFF, OFF, OFF, OFF, OFF.
5. JUMPER ALL UNUSED DIGITAL "+" INPUTS TO THE B TERMINAL.
6. JUMPER ALL UNUSED DIGITAL "-" INPUTS TO THE N TERMINAL.
7. THE ANALOG AND DIGITAL INPUT ASSIGNMENT MUST BE MARKED ON THE HCA SHEET.
8. DO NOT JUMPER INPUTS WITH DIFFERENT VOLTAGE REFERENCES TOGETHER.
9. REFER TO "FIELD INSTRUCTIONS FOR INSTALLATION AND OPERATION OF HIGHWAY CROSSING ANALYZERS" FOR EQUIPMENT SETUP.

MODEM NOTES

1. GAS ARRESTOR, RELIABLE ELECTRIC # 392 SVSR2.
2. STATION WIRE, 4 COND. #PVC-4C-22B-POP STOCK #078-8040
3. MODULAR BLOCK, #SE-625A2-4-50 STOCK #078-1000

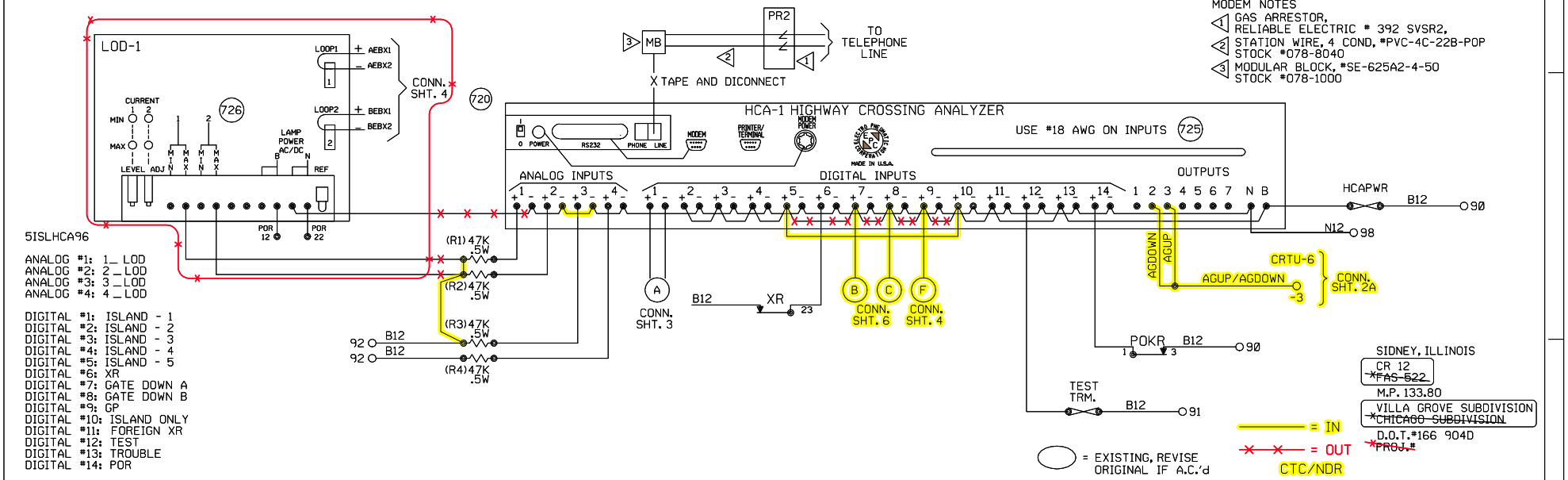

SIDNEY, ILLINOIS
CR 12
~~FAS-522~~
M.P. 133.80
VILLA GROVE SUBDIVISION
~~CHICAGO SUBDIVISION~~
D.O.T.#166 904D
~~PROJ.#~~

			Designed: 12/12/08 INSTALL GATES AND EXTERNAL CROSSING CONTROLLER AT CR 12 M.P. 133.80 Rec#: 15: WO#: 89231 /WSD /CTC/JJF	REV. 2-01-02 INSTALL CRTU W.O. 3327 8-12-01 JEC/WITT/WITT/EML	1 REV. 6-25-96 REVISED PER FIELD A.C. AFE #13053 3-24-96 WPB BRC/SAB/JM	MODIFICATION LEVEL		UNION PACIFIC QUALITY PRODUCTIVITY SAFETY SIGNAL DESIGN	DES: JM DIG: JM CHK: WPB A.F.E. 13053 ID= ~~030113380.2~~ 030113380.2X	UNION PACIFIC RAILROAD 81ST ST., ILLINOIS TO VILLA GROVE, ILLINOIS C. T. C. CIRCUITS OFFICE OF CHIEF ENG'R OMAHA NEBR.	DATE 2-13-96 SHEET 2 DWG 133.80 S-301
						Q.A. LAST LEVEL CHK'D.	AU				
						LAST LEVEL MOD. THIS TYP.	AU				
						LAST LEVEL BY DESIGNER.	00				
						CHANGED FROM TYP.? Y/N	N				

(REV. 6-1-94) (HCAFC.2)

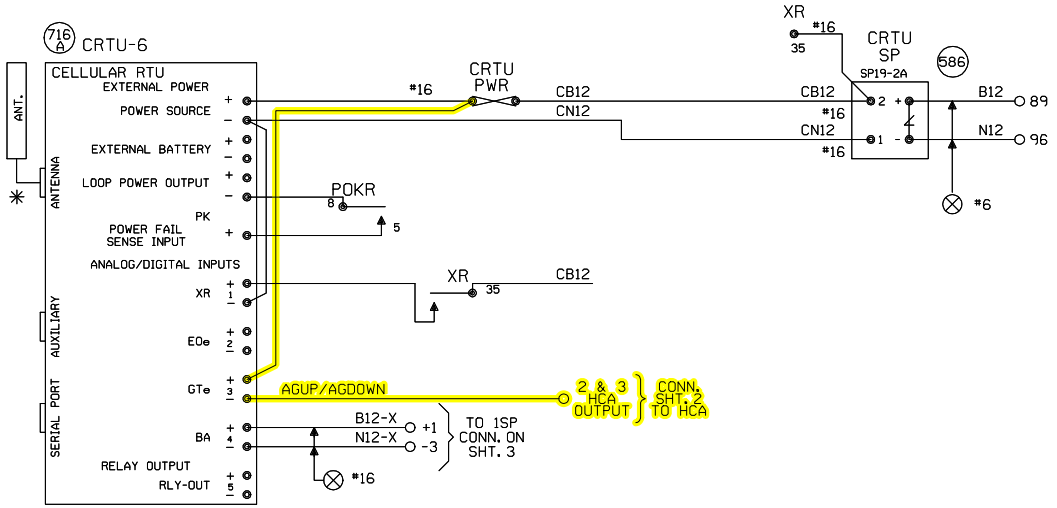

MOUNT CRTU AT LEAST 18" AWAY FROM HIGH VOLTAGE POWER SOURCES

NOTES:

ALL DIODES 1N5060 OR 1N4004 UNLESS OTHERWISE NOTED.
✳ MOUNT ANTENNA ON TOP OF HOUSE.
ALL WIRES #18 UNLESS OTHERWISE NOTED.
ALL UNUSED 'NC' INPUTS MUST BE TIED HIGH TO BATTERY
ALL UNUSED ANALOG INPUTS MUST BE TIED HIGH TO BATTERY
ALL UNUSED 'NO' INPUTS MUST BE DISCONNECTED
NORMAL STATE FOR ANALOG CHANNELS IS EQUAL TO THE STORED NOMINAL VOLTAGE +120% OR -81%
CRTU FRONT PANEL DISPLAY CHART INDICATES NORMAL STATE

■ DIGITAL INPUT HIGH, OR POWER FAIL INPUT CLOSED
□ DIGITAL INPUT LOW, OR POWER FAIL INPUT OPEN

□ L ← LATCH IS SET BECAUSE CRTU DETECTED AN ALARM CONDITION
■ 12.06V L ←

'sRUN MODE' 'sRUN MODE-SILENT'
CRTU RADIO IS DISABLED. REPROGRAM CRTU WITH LAPTOP.

ANALOG AND AC INPUT MODULES MUST BE MOUNTED LESS THAN 12" FROM CRTU

UNIT INSTALLATION AND SETUP

R.R. SITE ID WHERE; SSSS = 4 CHARACTER SUBDIVISION ID. FILL WITH PRECEDING ZEROS AS REQUIRED. THE MAIN TRACK SUBDIVISION ID* IS IN THE CURRENT TIMETABLE. INDUSTRIAL LEADS, LEASED, AND LEAD TRACKS LISTED WITHIN THE SUBDIVISION MAY HAVE THEIR OWN UNIQUE SUBDIVISION ID*. DO NOT AUTOMATICALLY USE THE MAIN TRACK SUBDIVISION ID* FOR THESE OTHER TRACKS. ALWAYS DOUBLE CHECK WITH THE MOST CURRENT PRINTED COPY OF THE TIMETABLE.
LLLLLLLL = 8 CHARACTERS USE DOT* AT CROSSINGS, AND USE MP* AT WAYSIDE AND HBD SITES. FILL WITH PRECEDING DASHES AS REQUIRED.
THE MP* MUST USE A DECIMAL POINT TO SEPARATE NUMBERS.
AA = 2 CHARACTER STATE NAME FOR CROSSINGS.
AA = 'WD' FOR WAYSIDE LOCATIONS, AA = 'HB' FOR HBD SITES.
MUST BE 14 CHARACTERS LONG, NO SPACES ALLOWED.

SITE IDENTIFIER: SSSSLLLLLLLLAA	0040-166904DIL
SIGNAL STRENGTH dBm	
CARRIER ID	
FIRMWARE VERSION	2.3.06
SERIAL NUMBER	03-02886-2401
CONFIGURATION NET	DIGITAL ~~MICROBURST~~
SIGNAL STATUS	
SCADANET STATUS	
SILENCE INTERVAL	60 MINUTES
HEALTHCHECK INTERVAL	EVERY 2 DAYS
ALARM DEFER DELAY	240 MINUTES (4 HOURS)
OPERATION TO RESUME:	RUN
CALIBRATION CONSTANT	
CH4	
POWER SOURCE	

FIELD PROVIDES: SAMPLED NOMINAL VOLTAGES, SCADANET STATUS CALIBRATION CONSTANTS, SERIAL NUMBER, AND SIGNAL STATUS.

CHANNEL SETUP - STANDARD CONFIGURATION 12:XR,EOe,GTe,BA

CHANNEL NORMAL STATE	SENSE (NO/NC)	NAME FUNCTION	RECOGNITION DELAY SECONDS ACTIVE	RECOGNITION DELAY SECONDS NORMAL	RETURN TO NORMAL	REPORTING MODE	ALARM LINKED CHANNEL	ALARM LINKED CRITERIA	EVENT LOGGING ENABLED OPTIONS
POWER FAIL (CH5) ■	POWER FAIL DETECT NO	PFin-PK AC POWER FAIL	7,200 ALARM	300 NORMAL	ENABLED	ALERT	DISABLED	N/A	
CH1 □	DIGITAL INPUT NO	CH1-XR XR DOWN TO LONG	1,800 ALARM	1 NORMAL	ENABLED	ALERT	DISABLED	N/A	ANALOG VALUE SENT
CH2 □	DIGITAL INPUT NO	CH2-EOe LIGHT OUT	120 ALARM	10 NORMAL	ENABLED	ALERT	DISABLED	N/A	
CH3 □	DIGITAL INPUT NO	CH3-GTe GATES NOT UP/DOWN	120 ALARM	10 NORMAL	ENABLED	ALERT	DISABLED	N/A	DIGITAL EVENTS
CH4 STORED NOMINAL VOLTAGE	ANALOG INPUT N/A	CH4-BA/V BATTERY MONITOR BATTERY LOW	300 ALARM	300 NORMAL	DISABLED	ALERT W/UPDATE	DISABLED	N/A	PFin-PK CH1-XR CH2-EOe CH3-GTe
POWER SOURCE (CH6)	ANALOG INPUT N/A	PS-BA/V BATTERY MONITOR BATTERY LOW	300 ALARM	300 NORMAL	DISABLED	ALERT W/UPDATE	DISABLED	N/A	

ANALOG CHANNEL	USEFUL RANGE VOLTS LOW	USEFUL RANGE VOLTS HIGH	DISPLAYED RANGE VOLTS LOW	DISPLAYED RANGE VOLTS HIGH	RELATIVE ALARM POINT LOW	RELATIVE ALARM POINT HIGH	ABSOLUTE ALARM POINT LOW	ABSOLUTE ALARM POINT HIGH	AUTOMATIC UPDATE INTERVAL	STORED NOMINAL VOLTAGE	SAMPLED NOMINAL VOLTAGE
CH4	0.0	30.00	0.0	30.00	81%	120%	10.0	28.0	10 DAYS	12.69	
POWER SOURCE	0.0	30.00	0.0	30.00	81%	120%	10.0	28.0	10 DAYS	12.69	
RELAY OUTPUT	NAME RLY-OUT		ACTIVE SET-UP-OPEN		NORMAL CLR-DN-CLOSE		PULSE DURATION		15 SECONDS	CHARTS REV'D 3-2-01	

MAINTENANCE OPERATIONS

TO START OR ABORT ANY PROCEDURE

1. PRESS THE 'CANCEL' BUTTON FIRST

WHEN RESPONDING TO A CALL, PUT THE CRTU IN THE 'SILENCE ALARMS' MODE

1. PRESS 'SELECT' AND THEN '+ ARROW' BUTTON UNTIL
   DISPLAY: ACTION? SILENCE ALARMS
2. PRESS THE 'SELECT' BUTTON TWICE
3. CORRECT PROBLEM AND SIMULATE NORMAL TRAIN MOVEMENT THROUGH THE LOCATION
4. EXAMINE EACH CHANNEL ON THE CRTU
5. PRESS THE '+/- ARROW' BUTTON VERIFY ALL CHANNELS INDICATE A NORMAL STATE NORMAL STATES ARE ON THE CHANNEL SETUP CHART

CLEAR TIMERS, LATCHES AND SEND ALL NORMAL

1. DO STEPS #1 - #5 ABOVE, AND PRESS 'CANCEL'.
2. PRESS 'SELECT' AND THEN '- ARROW' BUTTON UNTIL
   DISPLAY: ACTION? SERVICE MODE
3. PRESS 'SELECT' AGAIN TO RESET TIMERS, AND IF
   DISPLAY: SERVICE MODE ALL NORMAL
4. PRESS 'SELECT' AGAIN TO CLEAR LATCHES, AND SEND ALL NORMAL. SKIP STEPS #5-#6.
5. HOWEVER, IF ALARMS ARE NOT CLEARED;
   DISPLAY: SERVICE MODE ALARMS PENDING/PRESENT
6. PRESS 'CANCEL', CORRECT PROBLEM AND REPEAT STEPS #2 THRU #5 UNTIL ALL NORMAL SENT.

TO CANCEL THE 'SILENCE ALARMS' MODE

1. PRESS 'SELECT' AND THEN '+ ARROW' BUTTON UNTIL
   DISPLAY: ACTION? CANCEL SILENCE
2. PRESS THE 'SELECT' BUTTON AGAIN

EXAMINE & SET BATTERY VOLTAGE NOMINAL VALUE

1. PRESS THE '+ ARROW' OR '- ARROW' BUTTON UNTIL THE DESIRED CHANNEL IS DISPLAYED.
   DISPLAY: PS-BA: 13.83V NORMAL
2. VERIFY THE DISPLAYED READING WITH A DIGITAL VOLTMETER
3. PRESS THE 'SELECT' BUTTON, AND THE CRTU DISPLAY WILL SWITCH BETWEEN CURRENT/SAVED NOMINAL VOLTAGE VALUES.
   DISPLAY: NOMINAL ON #6? (CURRENT) 13.83
   DISPLAY: SAVED NOMINAL 6 (STORED) 12.69
4. PRESS THE 'SELECT' BUTTON AND THE CURRENT OR 'NOMINAL ON' VALUE WILL BE SAMPLED AND STORED AS THE 'SAVED NOMINAL' VALUE
5. VERIFY THE 'NOMINAL ON' AND 'SAVED NOMINAL' VALUES ARE EQUIVALENT, REPEAT STEPS #1 THRU #3 & PRESS THE 'CANCEL' BUTTON.

= IN
~~= OUT~~
CTC/NDR
= EXISTING, REVISE ORIGINAL IF A.C.'d

SIDNEY, ILLINOIS
CR 12
~~FAS 522~~
M.P. 133.80
VILLA GROVE SUBDIVISION
~~CHICAGO SUBDIVISION~~
D.O.T.#166 904D
~~PROJ.#~~

Designed: 12/12/08
INSTALL GATES AND EXTERNAL CROSSING CONTROLLER AT CR 12 M.P. 133.80
Req#: 15: WO#: 89231 /WSD /CTC/JJF

REV. 2-01-02
INSTALL CRTU
W.O. 3327
8-12-01
JEC/WITT/WITT/EML

MODIFICATION LEVEL	
Q.A. LAST LEVEL CHK'D.	
LAST LEVEL MOD. THIS TYP.	
LAST LEVEL BY DESIGNER.	
CHANGED FROM TYP.? Y/N	

UNION PACIFIC
QUALITY PRODUCTIVITY SAFETY
SIGNAL DESIGN

DES:	WITT IND
DIG:	WITT IND
CHK:	EML
A.F.E.	3327
ID:	~~030113380.2A~~ 030113380.2AX

UNION PACIFIC RAILROAD
81ST ST., ILLINOIS
TO VILLA GROVE, ILLINOIS
C.T.C CIRCUITS
OFFICE OF CHIEF ENG'R OMAHA NEBR.

DATE	07-01-01
SHEET	2A
DWG	133.80
	S-301

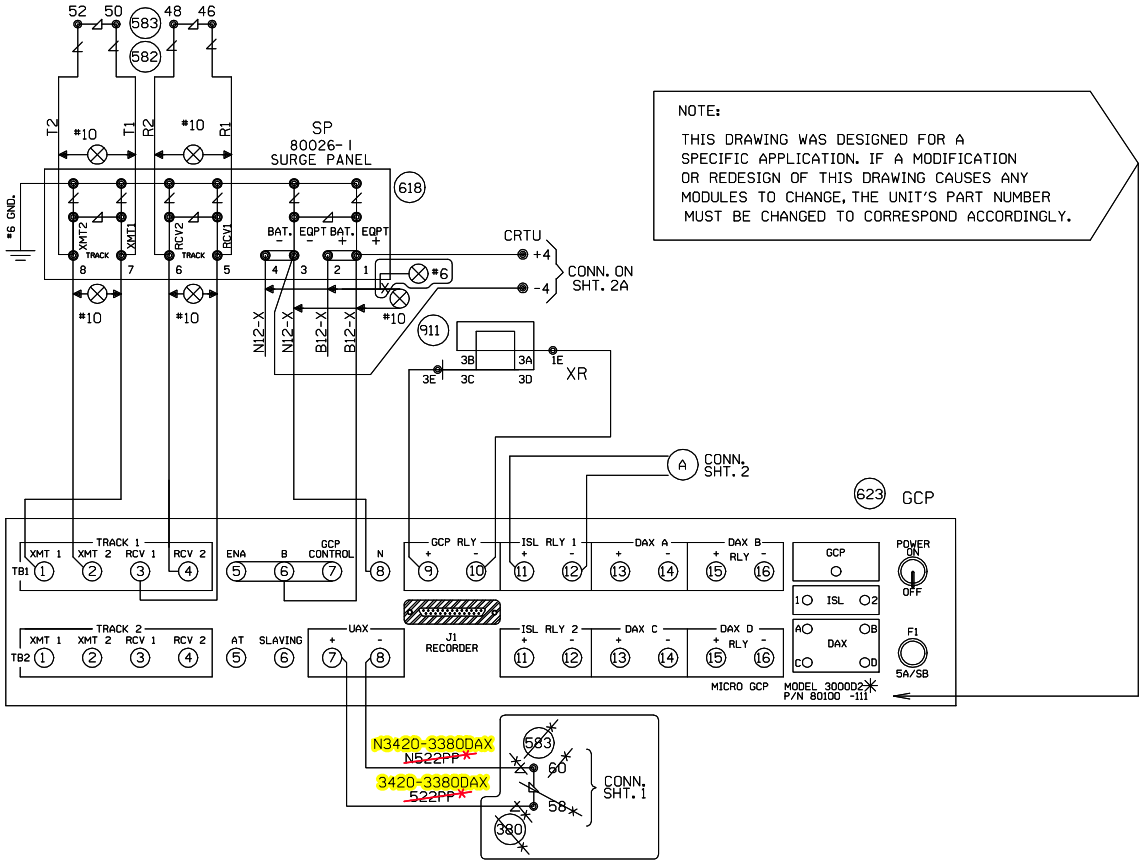

NOTE:

THIS DRAWING WAS DESIGNED FOR A SPECIFIC APPLICATION. IF A MODIFICATION OR REDESIGN OF THIS DRAWING CAUSES ANY MODULES TO CHANGE, THE UNIT'S PART NUMBER MUST BE CHANGED TO CORRESPOND ACCORDINGLY.

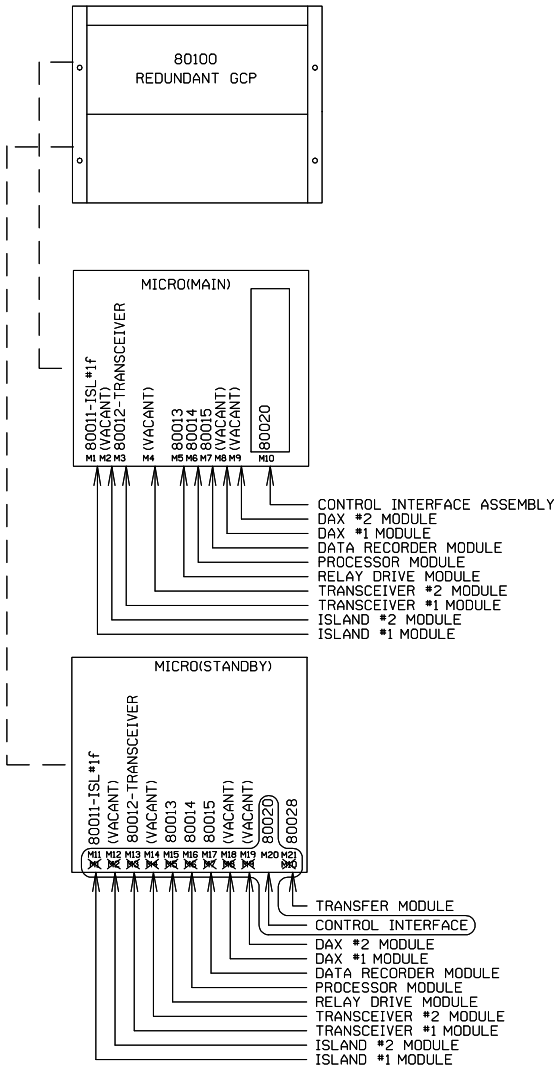

✳ = RECORDER INTERFACE UNIT, 80025, IS REQUIRED TO RECORD EXTERNAL RELAY FUNCTIONS

NOTE: EACH TRANSMITTER TO RAIL WIRE FROM TB1-1 AND TB1-2 MUST NOT EXCEED THE MAXIMUM LENGTH SPECIFIED IN THE TABLE SHOWN BELOW. THE RECEIVER WIRE LENGTH IS NOT CRITICAL. DOES NOT APPLY TO 6 TRACK WIRE APPLICATION.

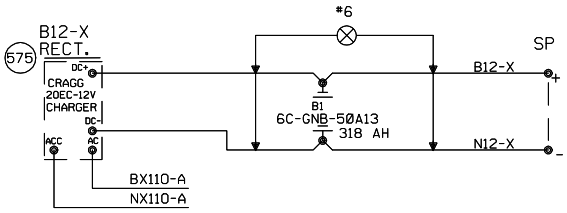

"Mf" FREQUENCY (HZ)	MAXIMUM TRANSMIT WIRE LENGTH (FEET)
86	100
114	125
156	150
211	200
285-~~790~~ 970	250

= IN

= OUT

CTC/NDR

= EXISTING, REVISE ORIGINAL IF A.C.'d

SIDNEY, ILLINOIS

CR 12

~~FAS 522~~

M.P. 133.80

VILLA GROVE SUBDIVISION

~~CHICAGO SUBDIVISION~~

D.O.T.#166 904D

~~PROJ.#~~

SAFETRAN DWG. NO. AD87032

Designed: 12/12/08 INSTALL GATES AND EXTERNAL CROSSING CONTROLLER AT CR 12 M.P. 133.80 Rec#: IS: WO#: 89231 /WSD /CTC/JJF	REV. 2-01-02 INSTALL CRTU W.O. 3327 8-12-01 JEC/WITT/WITT/EML	1 REV. 6-25-96 REVISED PER FIELD A.C. AFE #13053 3-24-96 WPB BRC/SAB/JM	MODIFICATION LEVEL Q.A. LAST LEVEL CHK'D. AU LAST LEVEL MOD. THIS TYP. AU LAST LEVEL BY DESIGNER. 00 CHANGED FROM TYP.? Y/N Y	UNION PACIFIC QUALITY PRODUCTIVITY SAFETY SIGNAL DESIGN	DES: JM DIG: JM CHK: WPB A.F.E. 13053 ID= ~~030113380.3;1~~ 030113380.3X	UNION PACIFIC RAILROAD 81ST ST., ILLINOIS TO VILLA GROVE, ILLINOIS C. T. C. CIRCUITS OFFICE OF CHIEF ENG'R OMAHA NEBR.	DATE 2-13-96 SHEET 3 DWG 133.80 S-301

(REV. 6-1-94) (3K1TKBFC.3)

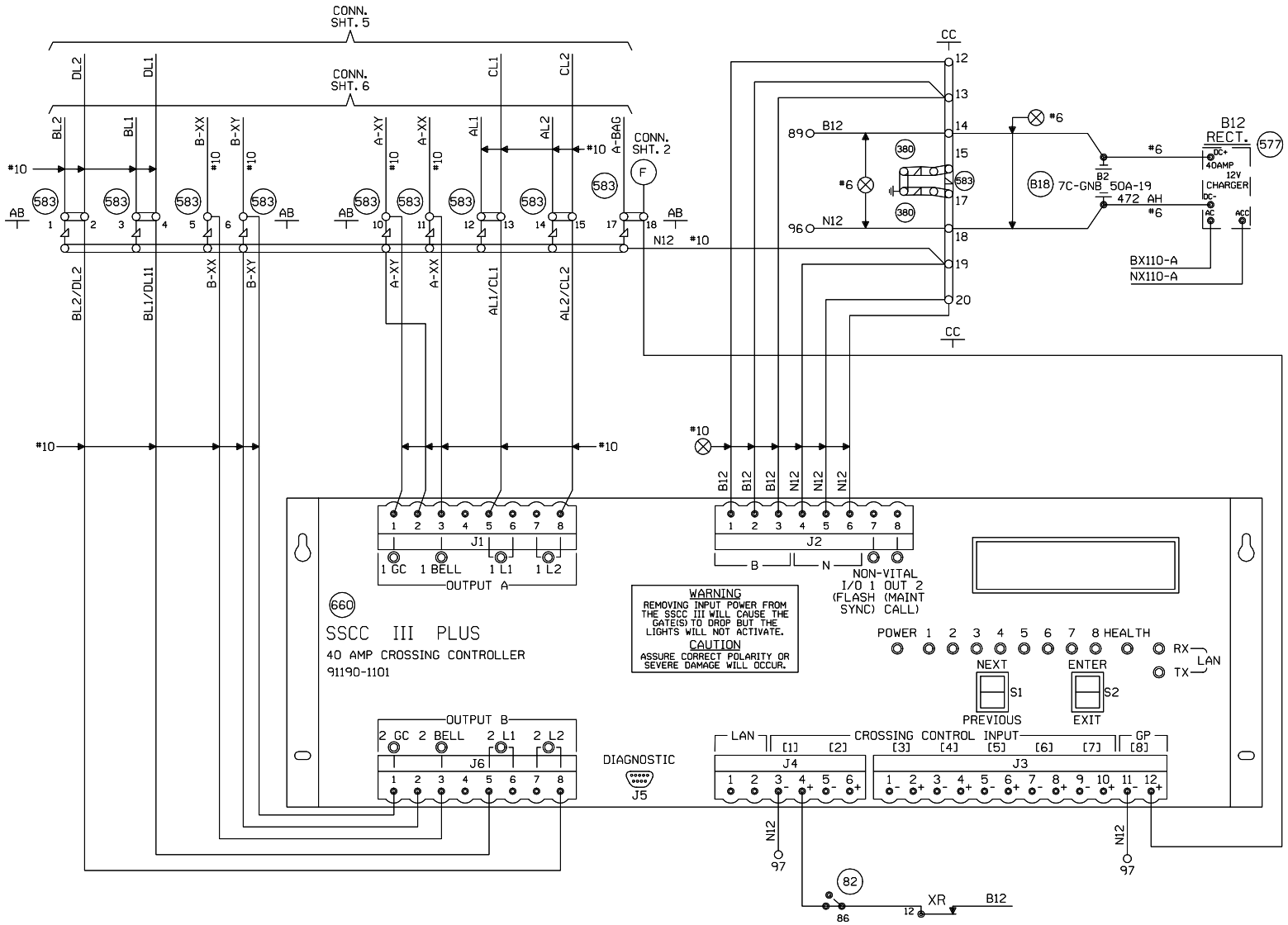

IMPORTANT
THE PROGRAM MCF AND ID LISTED BELOW MUST BE ENTERED IN THE PROGRAM SETUP ROUTINE FOR THIS SOLID STATE CROSSING CONTROLLER TO FUNCTION PROPERLY.
PROGRAM MCF: BASICPLS PROGRAM ID: 087

EXTERNAL CROSSING CONTROLLER PROGRAM NOTE:

*1) PROGRAM INPUT 2-7 TO DISABLED

NEW SHEET

Designed: 12/12/08

INSTALL GATES AND EXTERNAL CROSSING CONTROLLER AT CR 12 M.P. 133.80

Rec#: 151 WO#: 89231 WSD /CTC/JJF

MODIFICATION LEVEL	
Q. A. LAST LEVEL CHECKED	DR
LAST LEVEL MOD THIS TYPICAL	DR
LAST LEVEL BY DESIGNER	DR
CHANGED FROM TYPICAL?	Y

REV 02.01.09 4K ACDCSSCC.5

UNION PACIFIC SIGNAL DESIGN

Date:	12-12-08
Des:	CTC
Chk:	WSD
AFE:	89231

UNION PACIFIC RAILROAD

SIDNEY, ILLINOIS
CR 12
VILLA GROVE SUBDIVISION

Office of Sr AVP Engineering - Signal/TCO Omaha, Nebraska

Sh.:	4
DOT	166904D
MP:	133.80
ID:	030113380.4X

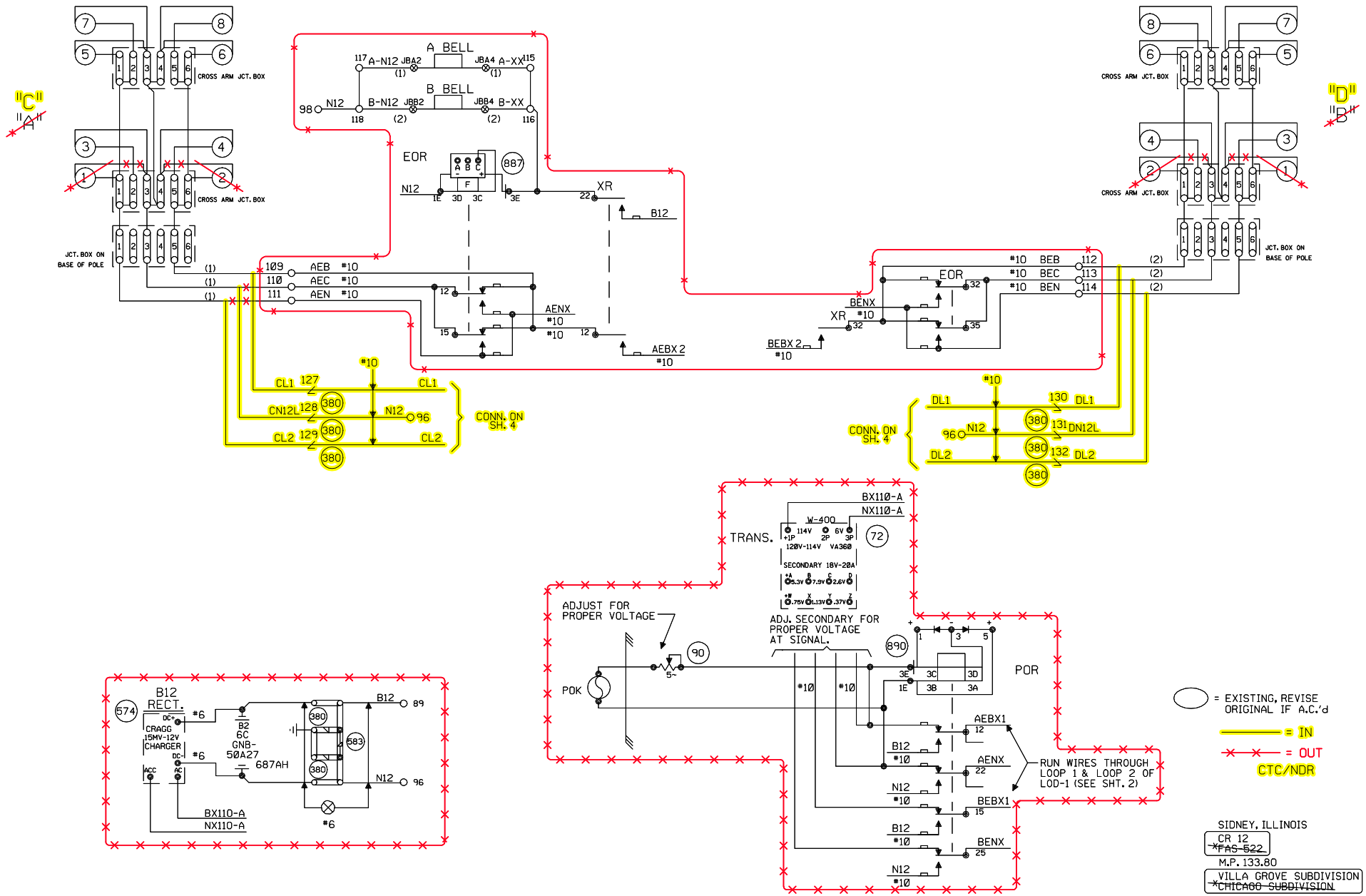

SIDNEY, ILLINOIS
CR 12
~~FAS 522~~
M.P. 133.80
VILLA GROVE SUBDIVISION
~~CHICAGO SUBDIVISION~~
D.O.T.#166 904D
~~PROJ.#~~

CABLE NO. 1 5C. NO. 6 B.T. TO SIGNAL ~~A~~ "C"
CABLE NO. 2 5C. NO. 6 B.T. TO SIGNAL ~~B~~ "D"

Designed: 12/12/08 INSTALL GATES AND EXTERNAL CROSSING CONTROLLER AT CR 12 M.P. 133.80 Rec#: IS: WO#: 89231 /WSD /CTC/JJF	1 REV. 6-25-96 REVISED PER FIELD A.C. AFE #13053 3-24-96 WPB BRC/SAB/JM	MODIFICATION LEVEL		UNION PACIFIC QUALITY PRODUCTIVITY SAFETY SIGNAL DESIGN	DES: JM DIG: JM CHK: WPB A.F.E. 13053 ID: ~~030113380.4;1~~ 030113380.5X	UNION PACIFIC RAILROAD 81ST ST., ILLINOIS TO VILLA GROVE, ILLINOIS C. T. C. CIRCUITS OFFICE OF CHIEF ENG'R OMAHA NEBR.	DATE 2-13-96 SHEET ~~4~~ 5 DWG 133.80 S-301
		Q.A. LAST LEVEL CHK'D.	AU				
		LAST LEVEL MOD. THIS TYP.	AU				
		LAST LEVEL BY DESIGNER.	00				
		CHANGED FROM TYP.? Y/N	N				

(REV. 6-1-94) (CTYP.4)

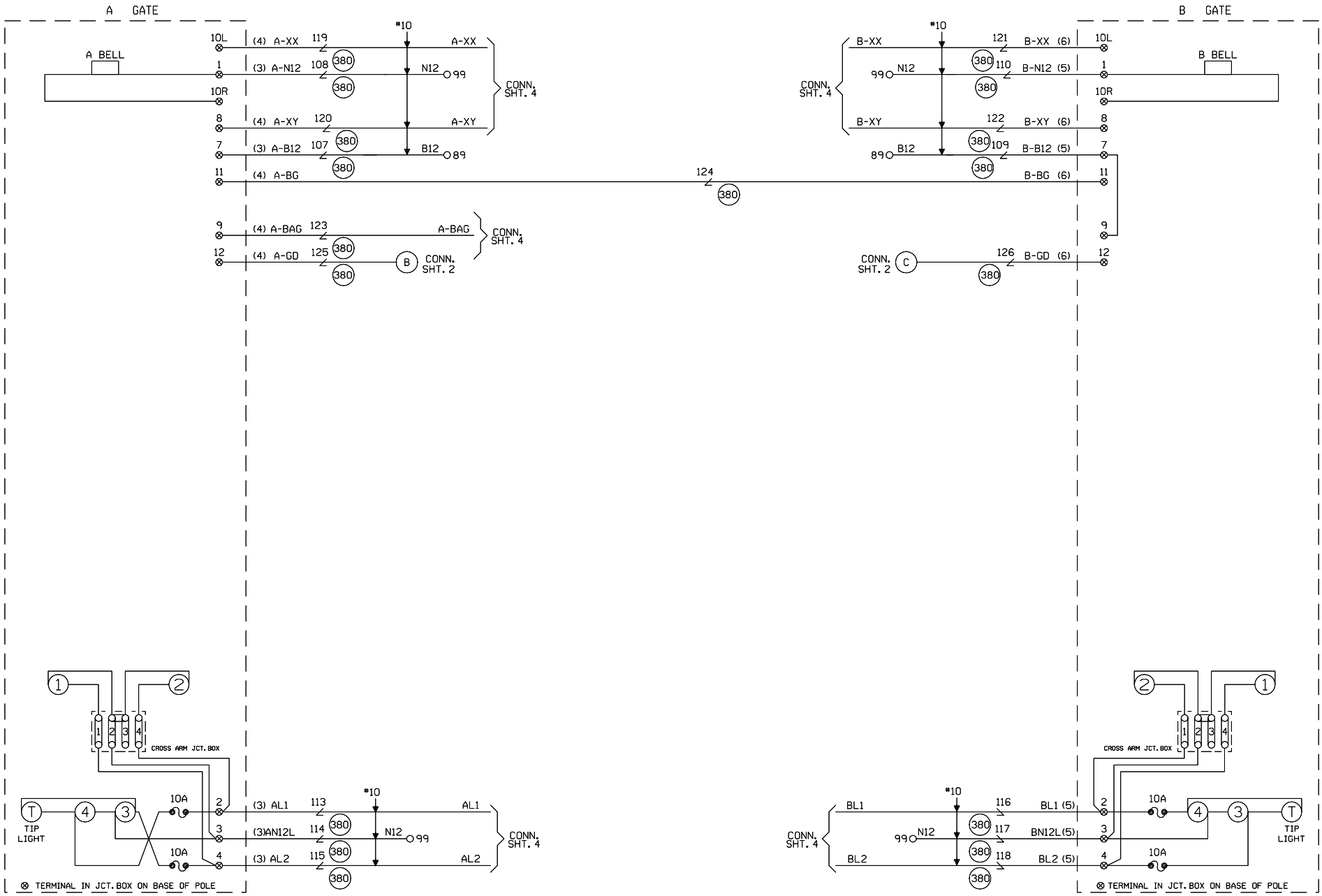

CABLE TABULATION

CABLE NO. 3 5C. NO.6 U.G.B.T.
CABLE NO. 4 7C. NO.14 U.G.B.T.
CABLE NO. 5 5C. NO.6 U.G.B.T.
CABLE NO. 6 7C. NO.14 U.G.B.T.

NEW SHEET

Designed: 12/12/08

INSTALL GATES AND EXTERNAL CROSSING CONTROLLER AT CR 12 M.P. 133.80

Rec#: 15: WO#: 89231 WSD / CTC/JJF

MODIFICATION LEVEL	
O. A. LAST LEVEL CHECKED	DR
LAST LEVEL MOD THIS TYPICAL	DR
LAST LEVEL BY DESIGNER	DR
CHANGED FROM TYPICAL?	Y

REV 02.01.09 4K GFCTYP.5

UNION PACIFIC
QUALITY PRODUCTIVITY SAFETY
SIGNAL DESIGN

Date:	12-12-08
Des:	CTC
Chk:	WSD
AFE:	89231

UNION PACIFIC RAILROAD

SIDNEY, ILLINOIS
CR 12
VILLA GROVE SUBDIVISION

Office of Sr AVP Engineering - Signal/TCO Omaha, Nebraska

Sh.:	6
DOT	166904D
MP:	133.80
ID:	030113380.6X

WCH 3597

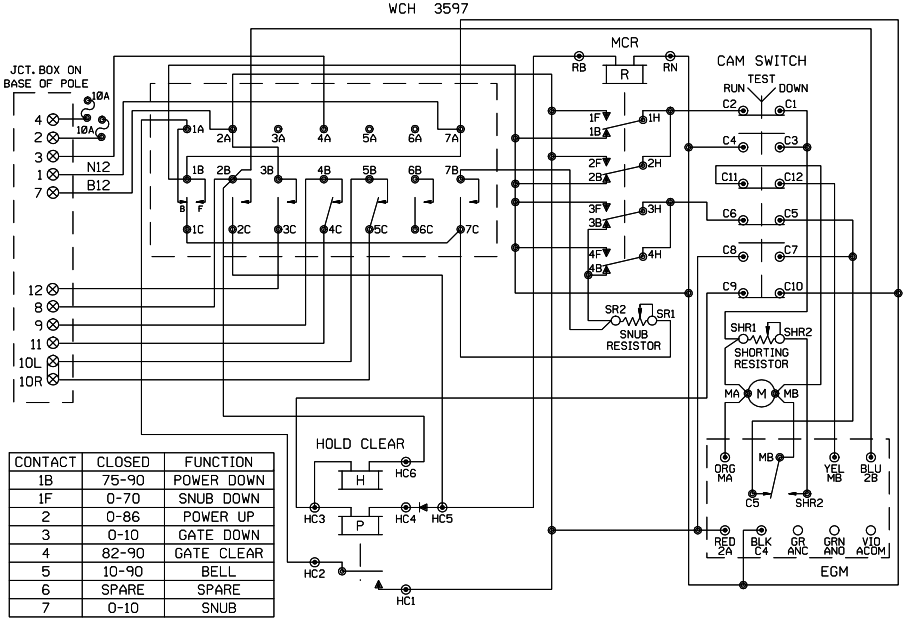

CONTACT	CLOSED	FUNCTION
1B	75-90	POWER DOWN
1F	0-70	SNUB DOWN
2	0-86	POWER UP
3	0-10	GATE DOWN
4	82-90	GATE CLEAR
5	10-90	BELL
6	SPARE	SPARE
7	0-10	SNUB

WCH 3597-RB

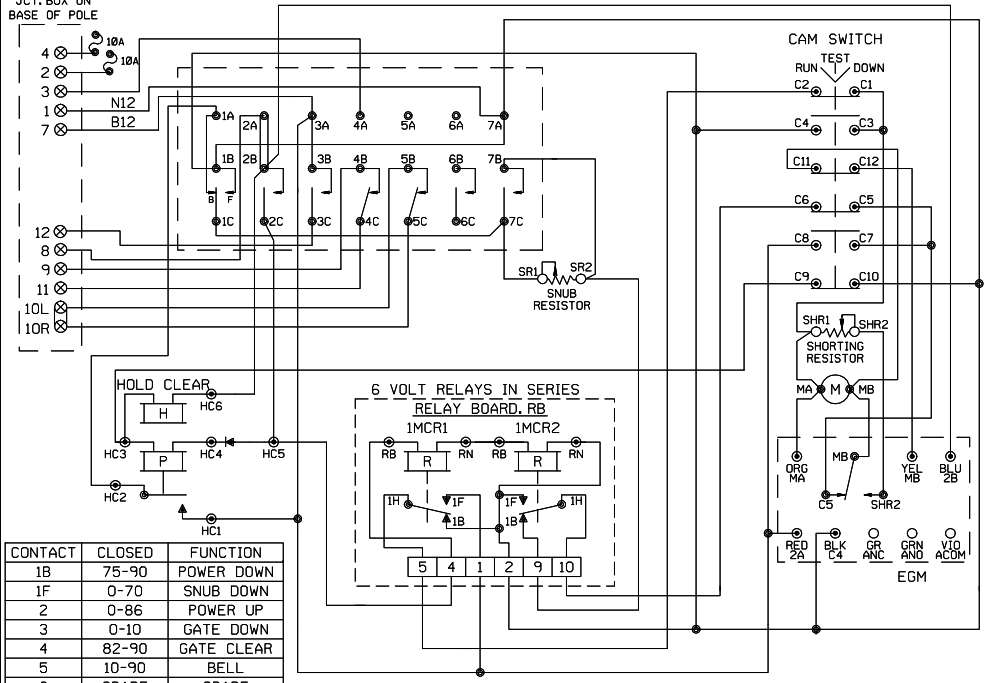

CONTACT	CLOSED	FUNCTION
1B	75-90	POWER DOWN
1F	0-70	SNUB DOWN
2	0-86	POWER UP
3	0-10	GATE DOWN
4	82-90	GATE CLEAR
5	10-90	BELL
6	SPARE	SPARE
7	0-10	SNUB

WCH 3593-E

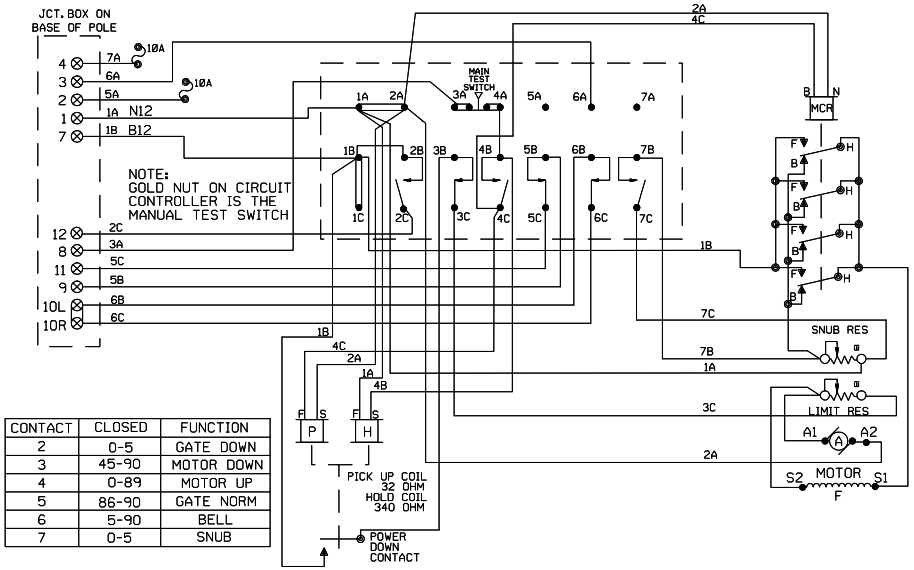

CONTACT	CLOSED	FUNCTION
2	0-5	GATE DOWN
3	45-90	MOTOR DOWN
4	0-89	MOTOR UP
5	86-90	GATE NORM
6	5-90	BELL
7	0-5	SNUB

WCH 3597-E

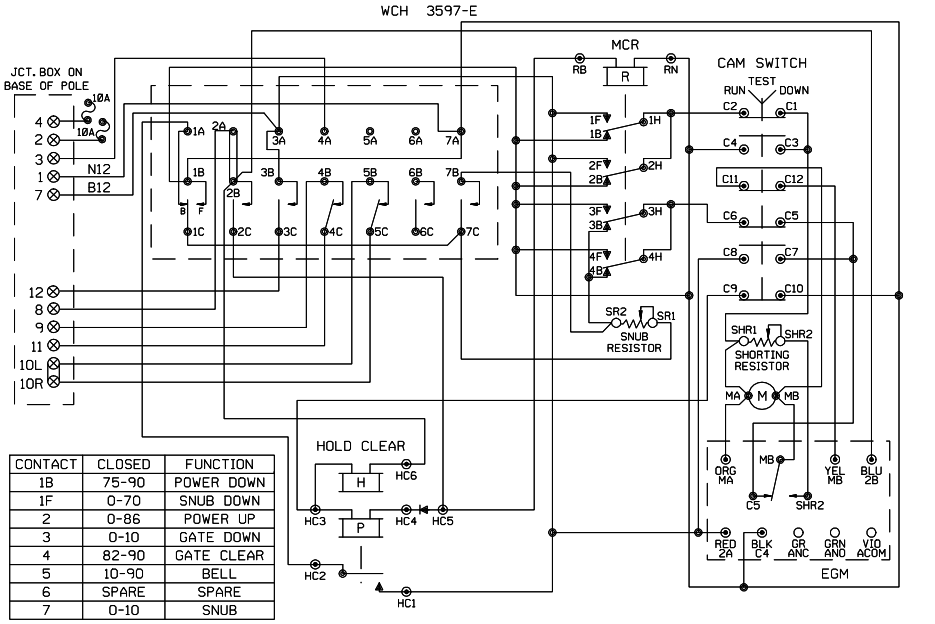

CONTACT	CLOSED	FUNCTION
1B	75-90	POWER DOWN
1F	0-70	SNUB DOWN
2	0-86	POWER UP
3	0-10	GATE DOWN
4	82-90	GATE CLEAR
5	10-90	BELL
6	SPARE	SPARE
7	0-10	SNUB

SHOW TYPE MECH. INSTALLED

ALL MECHANISMS SHOWN IN THE CLEAR POSITION

JCT. BOX ON BASE POLE

L	R	L	R
1		7	
2		8	
3		9	
4		10	
5		11	
6		12	

NEW SHEET

Designed: 12/12/08

INSTALL GATES AND EXTERNAL CROSSING CONTROLLER AT CR 12 M.P. 133.80

Rec#: 151 WO#: 89231 WSD /CTC/JJF

MODIFICATION LEVEL	
D. A. LAST LEVEL CHECKED	DR
LAST LEVEL MOD THIS TYPICAL	DR
LAST LEVEL BY DESIGNER	DR
CHANGED FROM TYPICAL?	N

REV 02.01.09 4K GWIRING.7

UNION PACIFIC — QUALITY PRODUCTIVITY SAFETY — SIGNAL DESIGN

Date: 12-12-08
Des: CTC
Chk: WSD
AFE: 89231

UNION PACIFIC RAILROAD

SIDNEY, ILLINOIS
CR 12
VILLA GROVE SUBDIVISION

Office of Sr AVP Engineering - Signal/TCO Omaha, Nebraska

Sh.: 7
DOT 166904D
MP: 133.80
ID: 030113380.7X

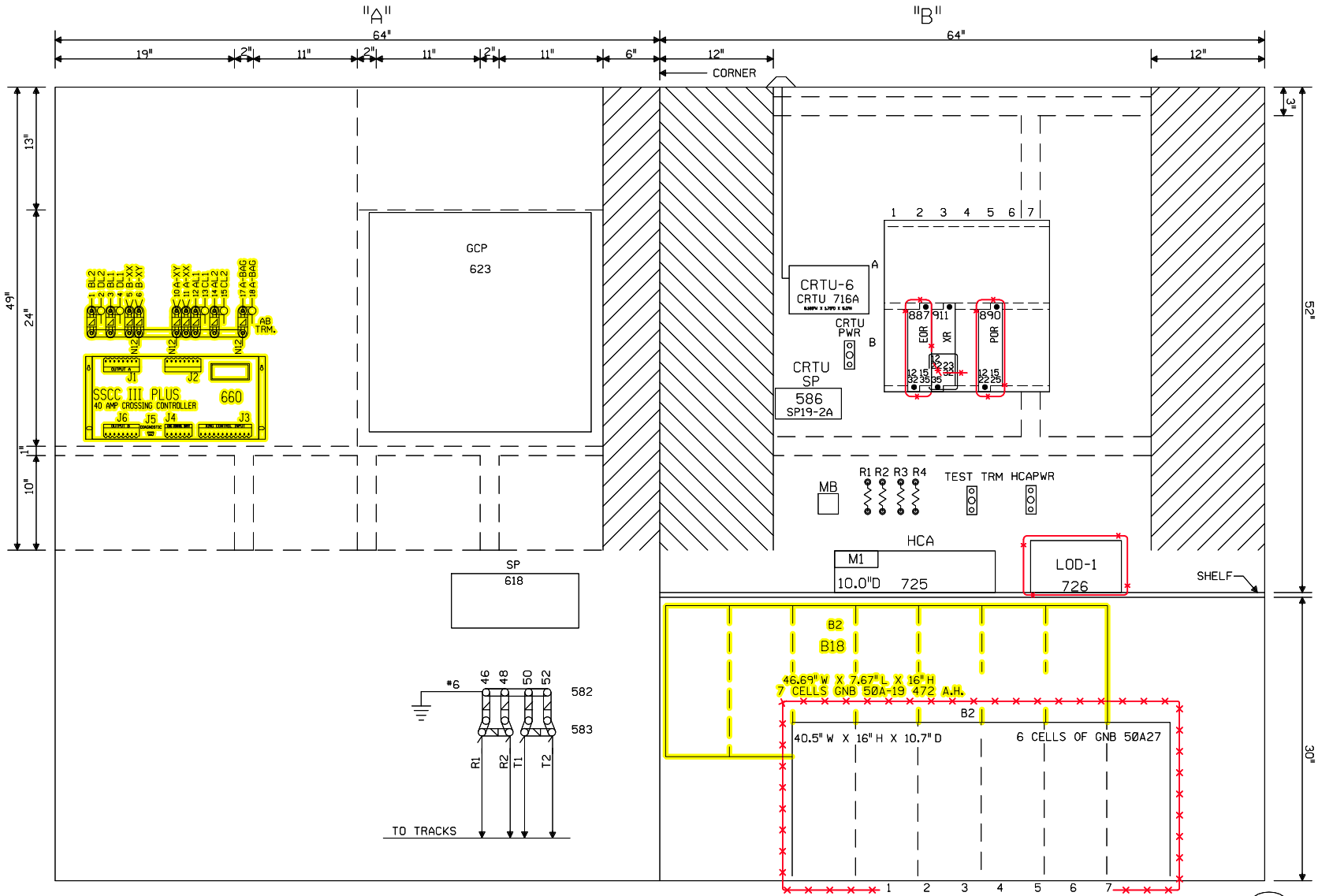

NOTE: ALL DIMENSIONS SHOWN ARE APPROXIMATE.

0 1 2 3 4 FEET

SCALE: 1.5 INCHES = 1 FOOT

= EXISTING, REVISE ORIGINAL IF A.C.'d

= IN

= OUT

CTC/NDR

SIDNEY, ILLINOIS
CR 12
~~*FAS 522~~
M.P. 133.80
VILLA GROVE SUBDIVISION
~~*CHICAGO SUBDIVISION~~
D.O.T.#166 904D
~~*PROJ.#~~

			Designed: 12/12/08 INSTALL GATES AND EXTERNAL CROSSING CONTROLLER AT CR 12 M.P. 133.80 Rec#: 15: WO#: 89231 /WSD /CTC/JJF	REV. 2-01-02 INSTALL CRTU W.O. 3327 8-12-01 JEC/WITT/WITT/EML	1 REV. 6-25-96 REVISED PER FIELD A.C. AFE #13053 3-24-96 WPB BRC/SAB/JM	MODIFICATION LEVEL Q.A. LAST LEVEL CHK'D. AU LAST LEVEL MOD. THIS TYP. AU LAST LEVEL BY DESIGNER. 00 CHANGED FROM TYP.? Y/N N	UNION PACIFIC SIGNAL DESIGN	DES: JM DIG: JM CHK: WPB A.F.E. 13053 ID= 030113380.8X ~~030113380.5R~~	UNION PACIFIC RAILROAD 81ST ST., ILLINOIS TO VILLA GROVE, ILLINOIS C. T. C. CIRCUITS OFFICE OF CHIEF ENG'R OMAHA NEBR.	DATE 2-13-96 SHEET ~~5~~ 8 DWG 133.80 S-301

(REV. 6-1-94) (3K1TKBFC.5)

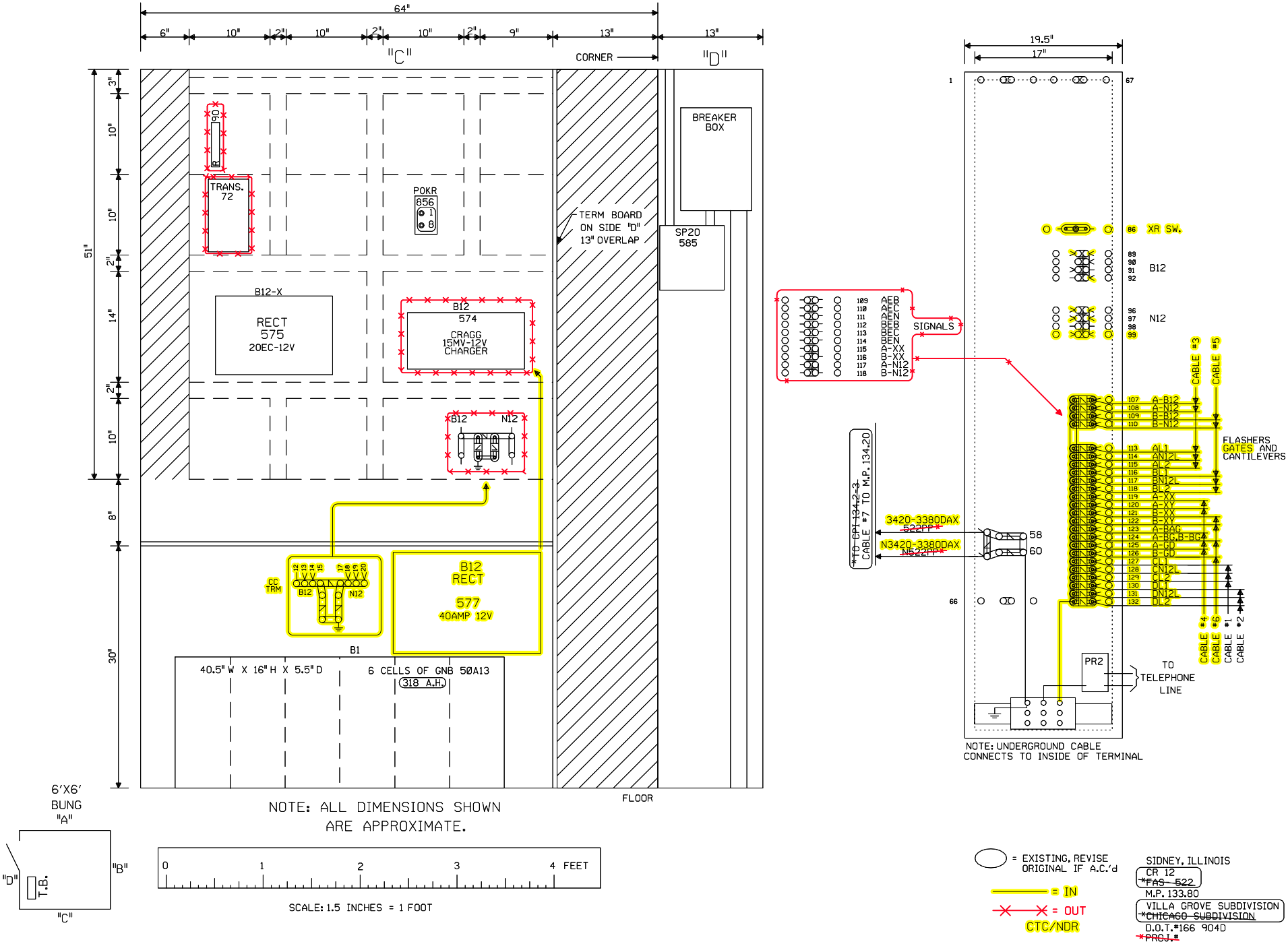

NOTE: ALL DIMENSIONS SHOWN ARE APPROXIMATE.

Designed: 12/12/08 INSTALL GATES AND EXTERNAL CROSSING CONTROLLER AT CR 12 M.P. 133.80 Rec#: IS: WO#: 89231 /WSD /CTC/JJF	REV. 2-01-02 INSTALL CRTU W.O. 3327 8-12-01 JEC/WITT/WITT/EML	1 REV. 6-25-96 REVISED PER FIELD A.C. AFE #13053 3-24-96 WPB BRC/SAB/JM	MODIFICATION LEVEL Q.A. LAST LEVEL CHK'D. AU LAST LEVEL MOD. THIS TYP. AU LAST LEVEL BY DESIGNER. 00 CHANGED FROM TYP.? Y/N N	UNION PACIFIC QUALITY PRODUCTIVITY SAFETY SIGNAL DESIGN	DES: JM DIG: JM CHK: WPB A.F.E. 13053 ID= 030113380.9X ~~030113380.6;1X~~	UNION PACIFIC RAILROAD 81ST ST., ILLINOIS TO VILLA GROVE, ILLINOIS C. T. C. CIRCUITS OFFICE OF CHIEF ENG'R OMAHA NEBR.	DATE 2-13-96 SHEET ~~6~~ 9 DWG 133.80 S-301

(REV. 6-1-94) (FCTYP6.*)