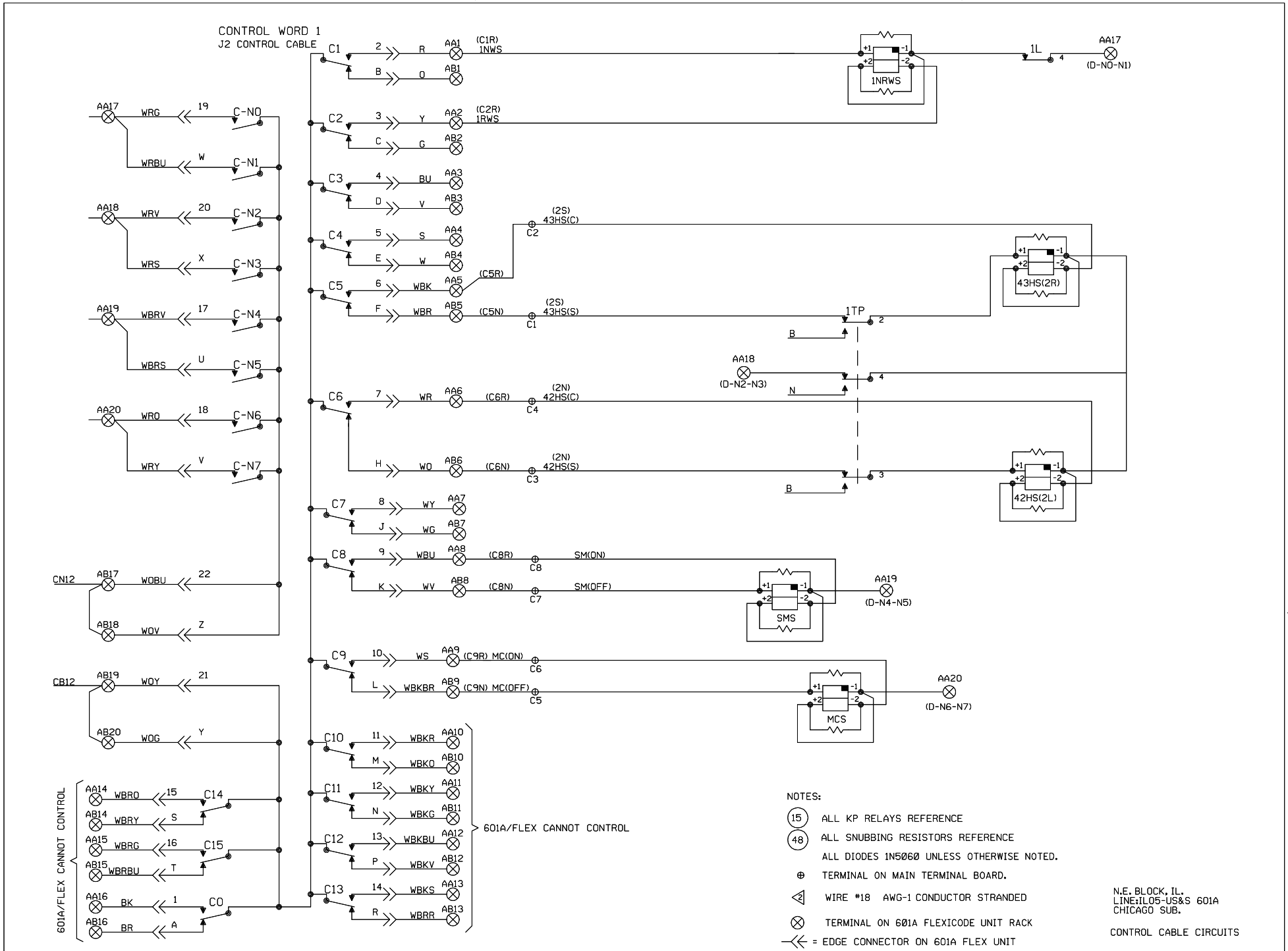
CONTROL WORD 1
J2 CONTROL CABLE
C1
2
R
AA1
(C1R)
1NWS
B
O
AB1
1NRWS
1L
4
AA17
(D-NO-N1)
AA17
WRG
19
C-NO
WRBU
W
C-N1
C2
3
Y
AA2
(C2R)
1RWS
C
G
AB2
C3
4
BU
AA3
D
V
AB3
AA18
WRV
20
C-N2
WRS
X
C-N3
C4
5
S
AA4
E
W
AB4
(2S)
43HS(C)
C2
C5
6
WBK
AA5
(C5R)
F
WBR
AB5
(C5N)
(2S)
43HS(S)
C1
43HS(2R)
AA19
WBRV
17
C-N4
WBRS
U
C-N5
1TP
2
B
AA18
(D-N2-N3)
4
N
AA20
WRO
18
C-N6
WRY
V
C-N7
C6
7
WR
AA6
(C6R)
(2N)
42HS(C)
C4
H
WO
AB6
(C6N)
(2N)
42HS(S)
C3
3
B
42HS(2L)
C7
8
WY
AA7
J
WG
AB7
C8
9
WBU
AA8
(C8R)
C8
SM(ON)
CN12
AB17
WOBU
22
K
WV
AB8
(C8N)
C7
SM(OFF)
SMS
AA19
(D-N4-N5)
AB18
WOV
Z
C9
10
WS
AA9
(C9R) MC(ON)
C6
CB12
AB19
WOY
21
L
WBKBR
AB9
(C9N) MC(OFF)
C5
MCS
AA20
(D-N6-N7)
AB20
WOG
Y
C10
11
WBKR
AA10
M
WBKO
AB10
C11
12
WBKY
AA11
N
WBKG
AB11
C12
13
WBKBU
AA12
P
WBKV
AB12
C13
14
WBKS
AA13
R
WBRR
AB13
601A/FLEX CANNOT CONTROL
601A/FLEX CANNOT CONTROL
AA14
WBRO
15
C14
AB14
WBRY
S
AA15
WBRG
16
C15
AB15
WBRBU
T
AA16
BK
1
CO
AB16
BR
A
NOTES:
15 ALL KP RELAYS REFERENCE
48 ALL SNUBBING RESISTORS REFERENCE
ALL DIODES 1N5060 UNLESS OTHERWISE NOTED.
⊕ TERMINAL ON MAIN TERMINAL BOARD.
WIRE #18 AWG-1 CONDUCTOR STRANDED
TERMINAL ON 601A FLEXICODE UNIT RACK
= EDGE CONNECTOR ON 601A FLEX UNIT
N.E. BLOCK, IL.
LINE:IL05-US&S 601A
CHICAGO SUB.
CONTROL CABLE CIRCUITS
Designed: 12/12/08
M.P. 133.80
Rec'd: WO#: 89231
IS: / /CTC/JJF
3
11-15-06
M.P. 135.60
A.F.E. 59237
/ /CTC/RDD
REV. 2-1-99
NEW CONNECTION
TRACK TO NS
M.P. 132.9
PER FIELD AC
12-15-98 CDL
CAC/CDL/NST/RCB
REV. 2-25-94
ADD 601A CODE
PER EMAC
CDL
UNION PACIFIC
QUALITY PRODUCTIVITY SAFETY
SIGNAL DESIGN
DES: EMAC
DIG: CDR
CHK: EMAC
A.F.E. 4205
ID= 030113424.7
UNION PACIFIC RAILROAD
81ST ST., ILLINOIS
TO VILLA GROVE, ILLINOIS
C.T.C. CIRCUITS
OFFICE OF GEN'L SIGNAL ENG'R
OMAHA NEBR.
DATE 11-13-91
SHEET 7
DWG 1342-43
S-301-M
I.S. 11-13-91

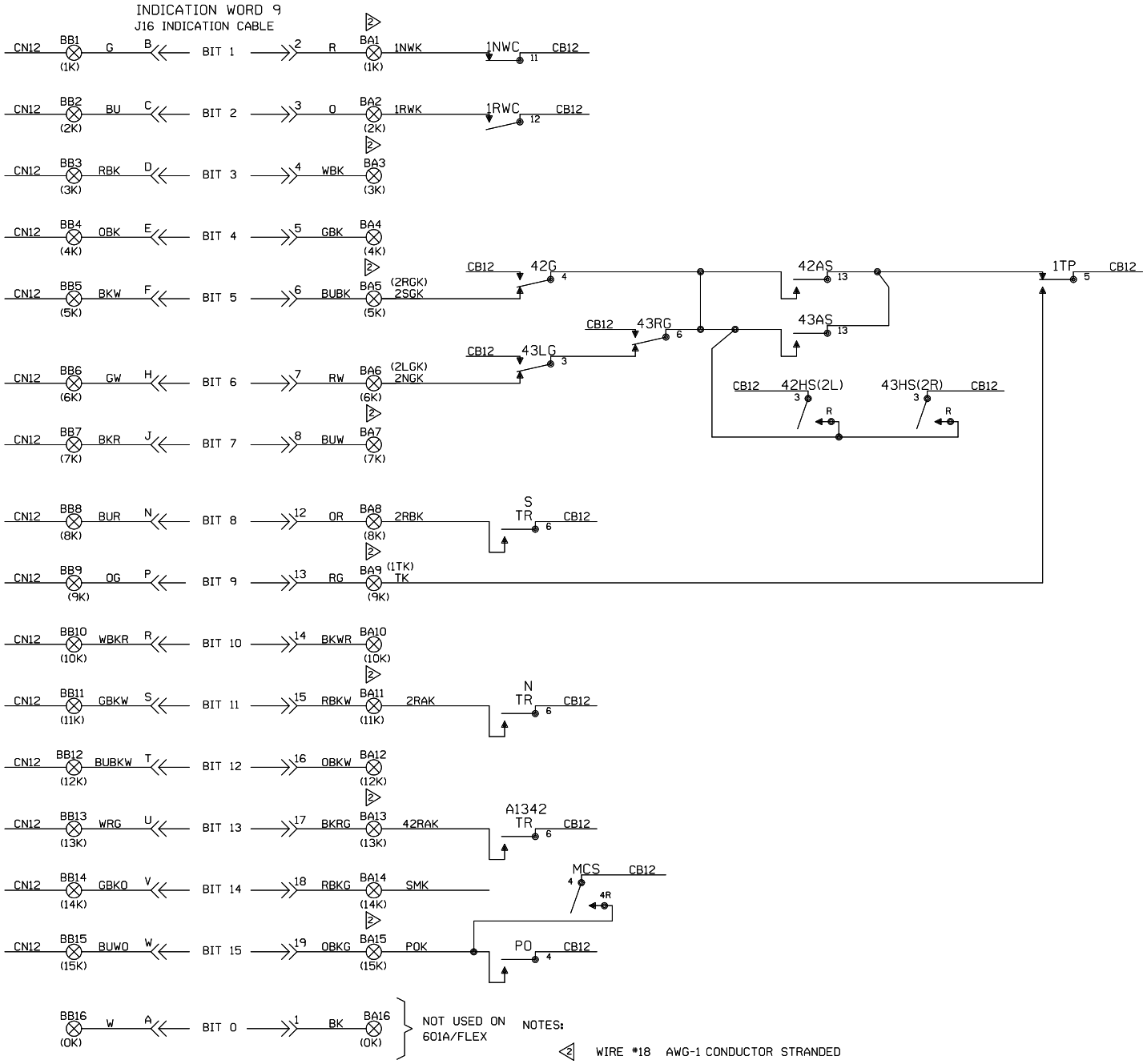

N.E. BLOCK, IL.L
LINE:IL05-US&S 601A
CHICAGO SUB.

INDICATION CABLE CIRCUITS

				Designed: 12/12/08	3	11-15-06	REV. 2-1-99	REV. 2-25-94	UNION PACIFIC	DES: EMAC	UNION PACIFIC RAILROAD	DATE 11-13-91
							NEW CONNECTION TRACK TO NS M.P. 132.9 PER FIELD AC 12-15-98 CDL	ADD 601A CODE PER EMAC CDL		DIG: CDR	81ST ST., ILLINOIS	SHEET 8
				M.P. 133.80	M.P. 135.60 A.F.E. 59237					CHK: EMAC	TO VILLA GROVE, ILLINOIS	DWG 1342-43
				Rec'd: 15: WO#: 89231 / /CTC/JJF	/ /CTC/RDD	CAC/CDL/NST/RCB			SIGNAL DESIGN	A.F.E. 4205	C.T.C. CIRCUITS	
										ID= 030113424.8	OFFICE OF GEN'L SIGNAL ENG'R OMAHA NEBR.	S-301-M

I.S. 11-13-91

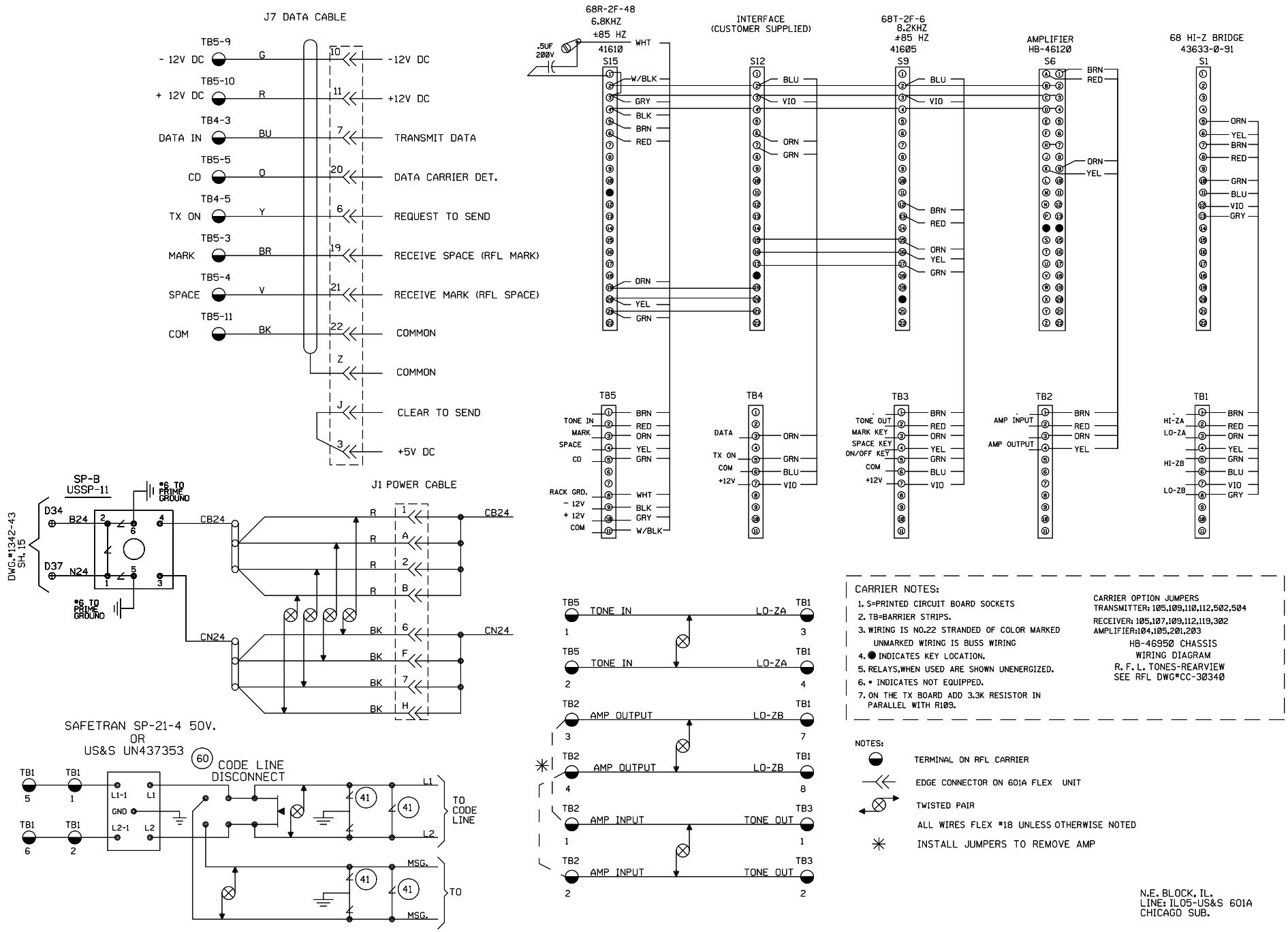
J7 DATA CABLE
TB5-9
- 12V DC
G
10
-12V DC
TB5-10
+ 12V DC
R
11
+12V DC
TB4-3
DATA IN
BU
7
TRANSMIT DATA
TB5-5
CD
O
20
DATA CARRIER DET.
TB4-5
TX ON
Y
6
REQUEST TO SEND
TB5-3
MARK
BR
19
RECEIVE SPACE (RFL MARK)
TB5-4
SPACE
V
21
RECEIVE MARK (RFL SPACE)
TB5-11
COM
BK
22
COMMON
Z
COMMON
J
CLEAR TO SEND
3
+5V DC
68R-2F-48
6.8KHZ
±85 HZ
41610
.5UF
200V
S15
INTERFACE
(CUSTOMER SUPPLIED)
S12
68T-2F-6
8.2KHZ
±85 HZ
41605
S9
AMPLIFIER
HB-46120
S6
68 HI-Z BRIDGE
43633-0-91
S1
TB5
TONE IN
MARK
SPACE
CD
RACK GRD.
- 12V
+ 12V
COM
TB4
DATA
TX ON
COM
+12V
TB3
TONE OUT
MARK KEY
SPACE KEY
ON/OFF KEY
COM
+12V
TB2
AMP INPUT
AMP OUTPUT
TB1
HI-ZA
LO-ZA
HI-ZB
LO-ZB
SP-B
USSP-11
D34
B24
D37
N24
DWG.#1342-43
SH.15
*6 TO
PRIME
GROUND
J1 POWER CABLE
CB24
CN24
SAFETRAN SP-21-4 50V.
OR
US&S UN437353
60
CODE LINE
DISCONNECT
L1-1
L1
GND
L2-1
L2
41
TO
CODE
LINE
MSG.
TO
TB5
TONE IN
LO-ZA
TB1
TB2
AMP OUTPUT
LO-ZB
AMP INPUT
TONE OUT
CARRIER NOTES:
1. S=PRINTED CIRCUIT BOARD SOCKETS
2. TB=BARRIER STRIPS.
3. WIRING IS NO.22 STRANDED OF COLOR MARKED
UNMARKED WIRING IS BUSS WIRING
4. ● INDICATES KEY LOCATION.
5. RELAYS,WHEN USED ARE SHOWN UNENERGIZED.
6. * INDICATES NOT EQUIPPED.
7. ON THE TX BOARD ADD 3.3K RESISTOR IN
PARALLEL WITH R109.
CARRIER OPTION JUMPERS
TRANSMITTER: 105,109,110,112,502,504
RECEIVER: 105,107,109,112,119,302
AMPLIFIER:104,105,201,203
HB-46950 CHASSIS
WIRING DIAGRAM
R. F. L. TONES-REARVIEW
SEE RFL DWG#CC-30340
NOTES:
TERMINAL ON RFL CARRIER
EDGE CONNECTOR ON 601A FLEX UNIT
TWISTED PAIR
ALL WIRES FLEX #18 UNLESS OTHERWISE NOTED
INSTALL JUMPERS TO REMOVE AMP
N.E. BLOCK, IL.
LINE: ILO5-US&S 601A
CHICAGO SUB.
RFL
Designed: 12/12/08
M.P. 133.80
Rec#: 151
WO#: 89231
/CTC/JJF
2
11-15-06
M.P. 135.60
A.F.E. 59237
/CTC/RDD
REV. 2-25-94
ADD 601A CODE
PER EMAC
CDL
UNION PACIFIC
QUALITY PRODUCTIVITY SAFETY
SIGNAL DESIGN
DES: EMAC
DIG: CDR
CHK: EMAC
A.F.E. 4205
ID= 030113424.9
UNION PACIFIC RAILROAD
81ST ST., ILLINOIS
TO VILLA GROVE, ILLINOIS
C.T.C. CIRCUITS
OFFICE OF GEN'L SIGNAL ENG'R
OMAHA NEBR.
DATE 11-13-91
SHEET 9
DWG 1342-43
S-301-M
I.S. 11-13-91

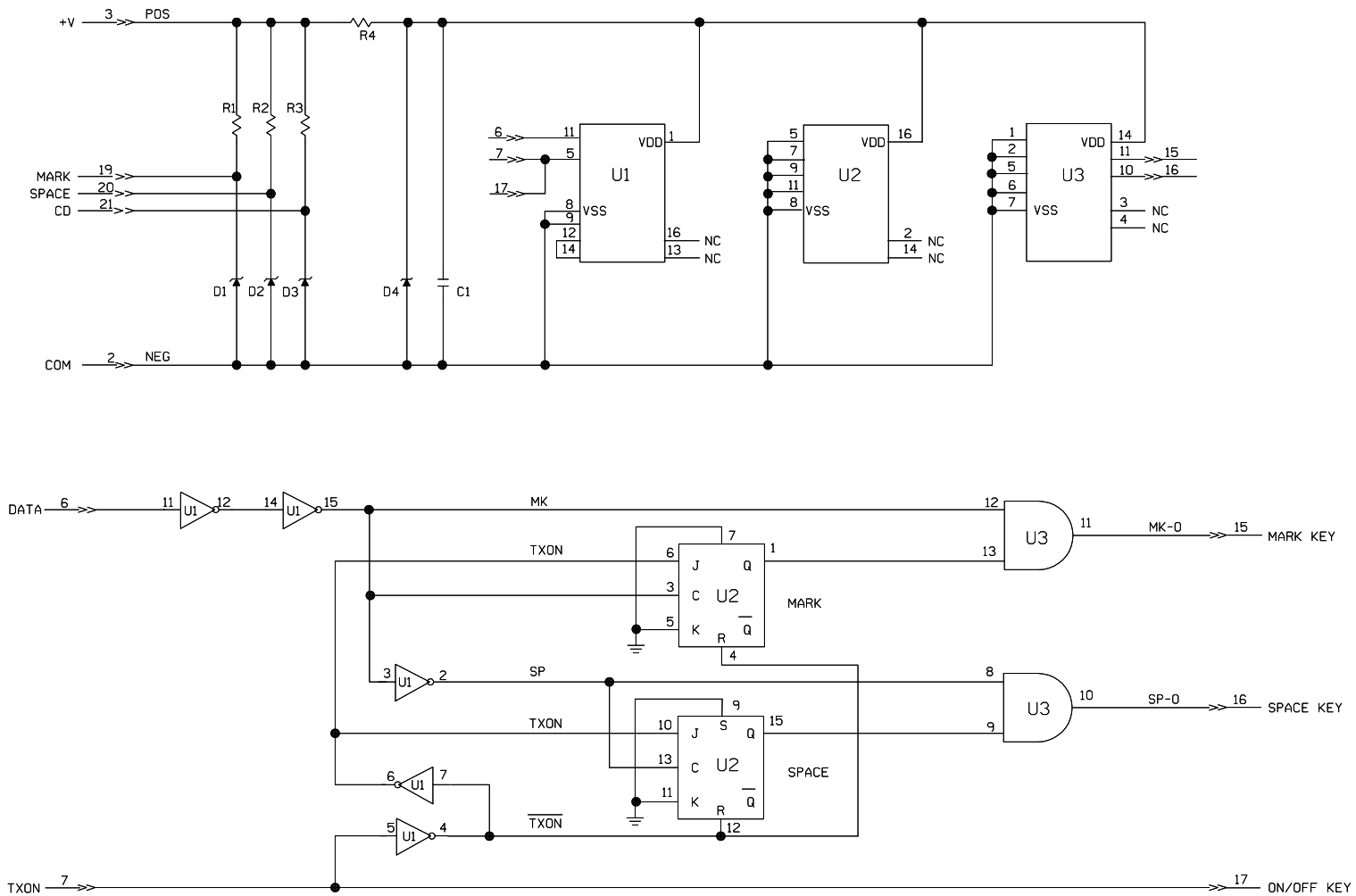

NOTES:
MATERIAL LIST FOR CARRIER INTERFACE

U1	1	HEX BUFFER/INVERTER, MOTOROLA MC14049BALD
U2	1	DUAL J-K FLIP-FLOP, MOTOROLA MC14027BALD
U3	1	QUAD 2-INPUT "AND" GATE, MOTOROLA MC14081BALD
D1-D4	4	5.1 VOLT 1 WATT ZENER DIODE, MOTOROLA 1N4733A
R1-R3	4	4700 OHM ½ WATT RESISTOR
R4	1	150 OHM ½ WATT RESISTOR
C1	1	.0047 MFD. 100 VOLT CAPACITOR, SPRAQUE 225
	1	CIRCUIT BOARD (CUSTOM)
>>		EDGE CONNECTOR OF CIRCUIT BOARD

N.E. BLOCK, IL.
LINE: ILO5-US&S 601A
CHICAGO SUB.

FLEXICORE CARRIER INTERFACE

Designed: 12/12/08	2 11-15-06	REV. 2-25-94	UNION PACIFIC	DES: WBB	UNION PACIFIC RAILROAD
M.P. 133.80	M.P. 135.60	ADD 601A CODE	QUALITY PRODUCTIVITY SAFETY	DIG: SJW	81ST ST., ILLINOIS
Rec#: WO#: 89231	A.F.E. 59237	PER EMAC	SIGNAL DESIGN	CHK: EMAC	TO VILLA GROVE, ILLINOIS
ISs / /CTC/JJF	/ /CTC/RDD	CDL		A.F.E. 4205	C.T.C. CIRCUITS
				ID= 030113424.10	OFFICE OF CHIEF ENG'R OMAHA NEBR.

DATE	6-21-91
SHEET	10
DWG	1342-43
	S-301-M

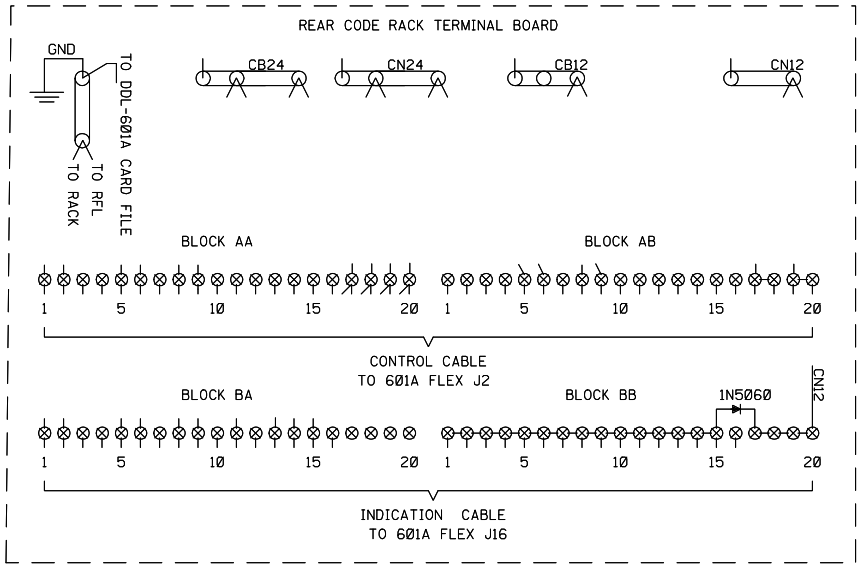

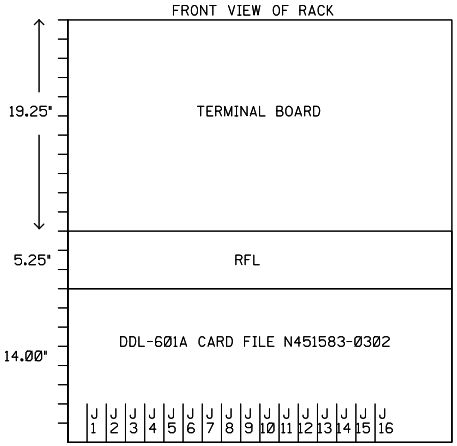

DDL-601A J1 POWER SUPPLY PCB (24V) N451441-7601
DDL-601A J2 CONTROL BIT AND DELIVERY BIT PCB N451441-4201
DDL-601A J7 CONTROLLER PCB (CPU) N451441-3501
DDL-601A J16 INDICATION OPTO PCB N451441-3201, REPLACEMENT CAN BE N451441-7202

CABLE	FROM	TO	TYPE
POWER	601 FLEX J1	CB24, CN24, GND	USS N451458-3305
DATA	601 FLEX J7	RFL CHASSIS	SEE BELOW (1)
CONTROL DELIVERY-1	601 FLEX J2	TERM. BLOCK AA-AB	USS N451458-3205
INDICATION INPUT-1	601 FLEX J16	TERM. BLOCK BA-BB	USS N451458-3105

(1) ALPHA 5509 WITH CONNECTOR KIT USS #N451170-1001

NOTES:

ALL DIODES 1N5060 UNLESS OTHERWISE NOTED.

⊕ TERMINAL ON MAIN TERMINAL BOARD.

⊗ TERMINAL ON 601A FLEXICODE UNIT RACK

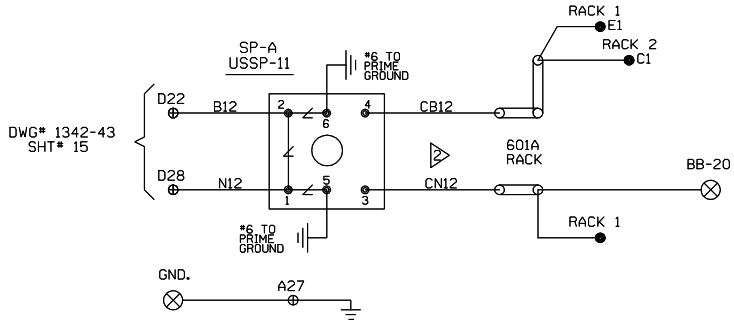

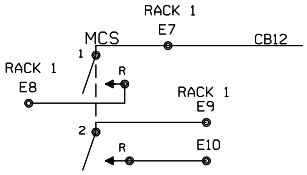

N.E. BLOCK, IL.
LINE: ILO5-US&S 601A
CHICAGO SUB.

TERMINAL BOARD & RACK

				Designed: 12/12/08	3	11-15-06	REV. 2-1-99	REV. 2-25-94	UNION PACIFIC	DES: EMAC	UNION PACIFIC RAILROAD	DATE 11-13-91
				M.P. 133.80		M.P. 135.60	NEW CONNECTION TRACK TO NS	ADD 601A CODE	QUALITY PRODUCTIVITY SAFETY	DIG: CDR	81ST ST., ILLINOIS	SHEET 11
				Rec#:		A.F.E. 59237	M.P. 132.9	PER EMAC		CHK: EMAC	TO VILLA GROVE, ILLINOIS	DWG 1342-43
				WO#: 89231			PER FIELD AC			A.F.E. 4205	C.T.C. CIRCUITS	
				ISt / /CTC/JJF	/ /CTC/RDD		12-15-98 CDL	CDL	SIGNAL DESIGN	ID= 030113424.11	OFFICE OF GEN'L SIGNAL ENG'R OMAHA NEBR.	S-301-M
							CAC/CDL/NST/RCB					

I.S. 11-13-91

SIGNAL & COMMUNICATIONS DIVISION, SWISSVALE, PA. T1116 SH. 929-8 PAGE

REV. 2-1-99 NEW CONNECTION TRACK TO NS M.P. 132.9 PER FIELD OK 12-15-98 CDL CAC/CDL/JJF/RCD	REV. 10-3-91 ADD TWO TRACK RESTORATION REV. PER AC CDR/FAP	REV. 10-3-91 REPLACE CODE UNITS AFE 840423 WBB WDH	ST. LOUIS 12-15-78. DRAWN BY JAL CHECKED AFE 770329 7-11-78	U.P.R.R. CO. DW 1342-43 PLACED IN SERVICE INSPECTED BY	S-301M SH. 12

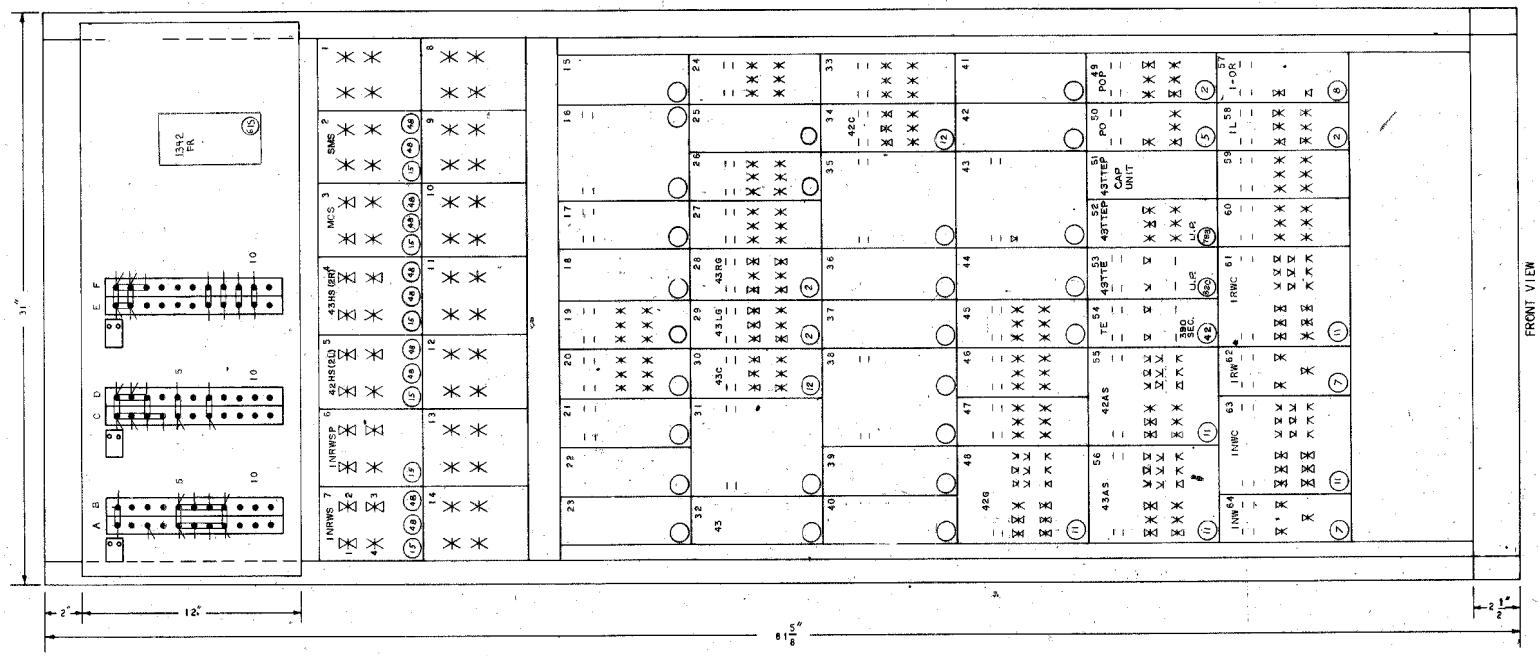

BLOCK, ILLINOIS
END OF SIDING
SIGNALS 1342L/R & 1343
M.P. 134.24
VILLA GROVE SUBDIVISION

						Designed: 12/12/08	5	11-15-06	UNION PACIFIC
						M.P. 133.80	M.P. 135.60 A.F.E. 59237		QUALITY PRODUCTIVITY SAFETY
						Rec'd: WO#: 89231 IS: / /CTC/JJF	/ /CTC/RDD		SIGNAL DESIGN

DES:	CTC
DIG:	CTC
CHK:	
A.F.E.	59237
ID=	030113424.12S

UNION PACIFIC RAILROAD

81ST STREET, ILLINOIS TO
VILLA GROVE, ILLINOIS
C.T.C. CIRCUITS

Office of AVP Engineering - Design Omaha, Nebraska

DATE	11-15-06
SHEET	12
DWG	134.24
	S-301

TIF ID= 030113424.12S.TIF

UNION SWITCH & SIGNAL, SWISSVALE, PA. T1116 SH. 929-9 PAGE

REV. 2-1-99 NEW CONNECTION TRACK TO NS M.P. 132.9 PER FIELD NL 11-15-99 CAC/CGL/WSF/MOB	REV. 10-3-91 ADD TWO TRACK RESTORATION. WJB CDR/FAP 7-11-78	ST LOUIS 12-15-76 DRAWN BY JAL CHECKED AFE 770329	U.P.R.R. CO. DW 1342-43 PLACED IN SERVICE INSPECTED BY

S-301-M SH. 13

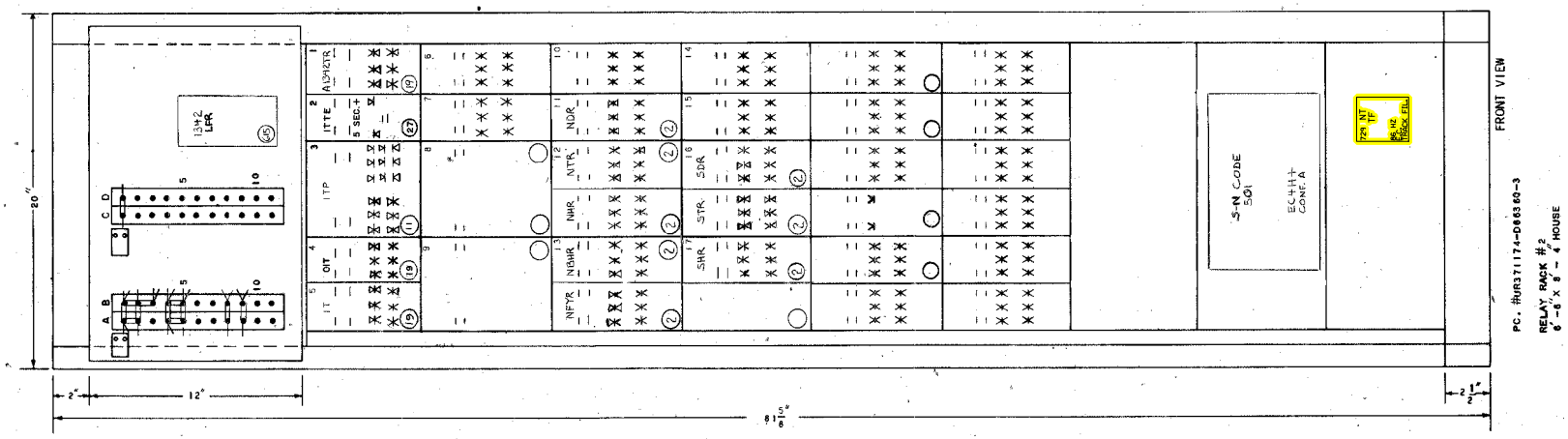

= IN CTC/NDR

BLOCK, ILLINOIS
END OF SIDING
SIGNALS 1342L/R & 1343
M.P. 134.24
VILLA GROVE SUBDIVISION

						Designed: 12/12/08 INSTALL GATES AND EXTERNAL CROSSING CONTROLLER AT CR 12 M.P. 133.80 Rec*: WO*: 89231 IS: /WSD / /CTC/JJF	4 11-15-06 M.P. 135.60 A.F.E. 59237 / /CTC/RDD	UNION PACIFIC QUALITY PRODUCTIVITY SAFETY SIGNAL DESIGN	DES: CTC DIG: CTC CHK: A.F.E. 59237 ID= 030113424.13S	UNION PACIFIC RAILROAD 81ST STREET, ILLINOIS TO VILLA GROVE, ILLINOIS C.T.C. CIRCUITS Office of AVP Engineering - Design Omaha, Nebraska	DATE 11-15-06 SHEET 13 DWG 134.24 S-301

TIF ID= 030113424.13S.TIF

UNION SWITCH & SIGNAL, SWISSVALE, PA. T1116 SH. 929-10 PAGE

REV. 2-1-99 NEW CONNECTION TRACK TO NS M.P. 135.9 PER FIELD A.L. 12-15-98 CAC/CEL/INSTRUCT	REV. 9-13-96 UPGRADE FAS-522 3-24-96 AFE 13053 BRC/SAB WPB JM	REV 10-3-91 REPLACE CODE UNITS AFE 840423 WJBB CDR/WDR	ST. LOUIS 12-15-76 DRAWN BY JAL CHECKED AFE 770329 7-11-78	U.P. R.R. CO. DW 1342-43 PLACED IN SERVICE INSPECTED BY

S-301-M SH. 14

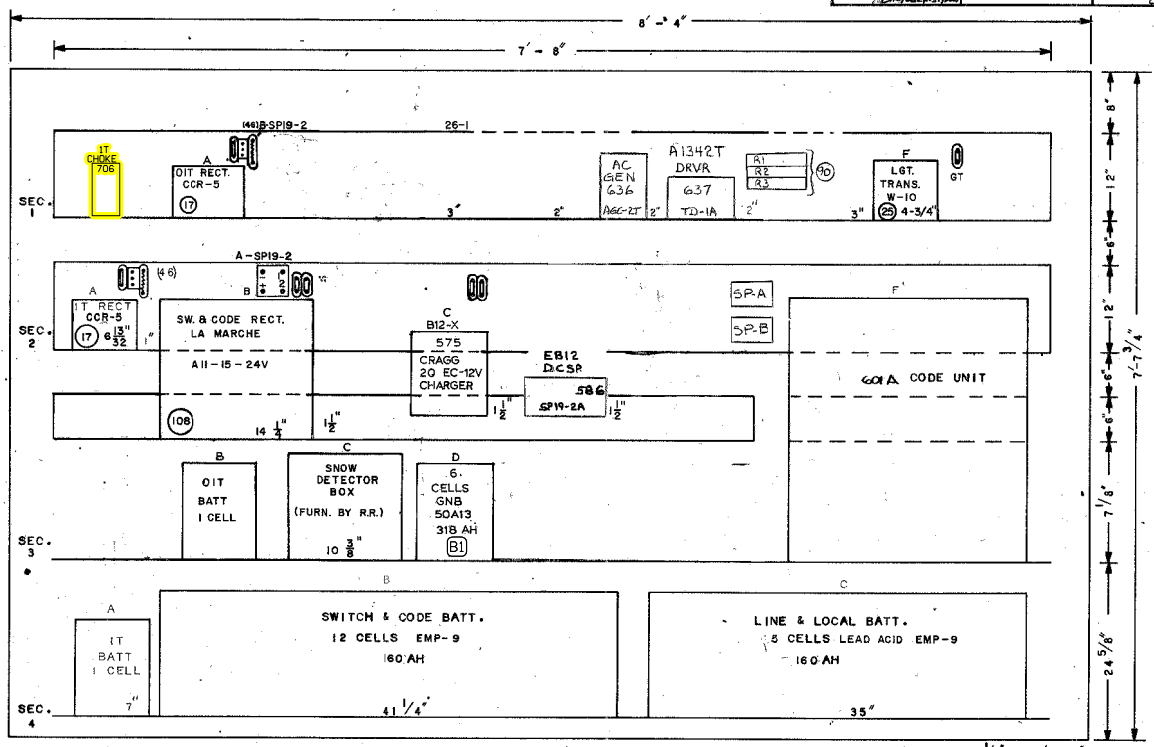

FRONT VIEW
LEFT SIDE 6'-6"X8'-4" HOUSE

APPROX SCALE: WIDTH 1 1/2" = 1'-0"
HEIGHT 1" = 1'-0"

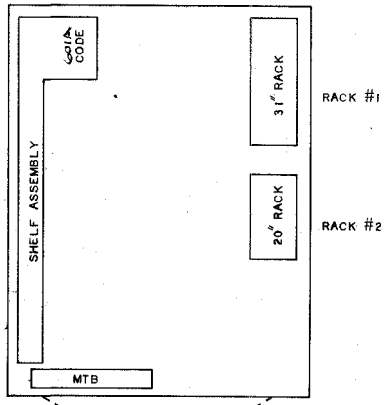

PLAN VIEW
6'-6"X8'-4" HOUSE

0040
155144

= IN CTC/NDR

= EXISTING, REVISE ORIGINAL IF A.C.'d

BLOCK, ILLINOIS
END OF SIDING
SIGNALS 1342L/R & 1343
M.P. 134.24
VILLA GROVE SUBDIVISION

						Designed: 12/12/08 INSTALL GATES AND EXTERNAL CROSSING CONTROLLER AT CR 12 M.P. 133.80 Rec'd: 1St: WO#: 89231 /WSD /CTC/JJF	5 11-15-06 M.P. 135.60 A.F.E. 59237 / /CTC/RDD	UNION PACIFIC QUALITY PRODUCTIVITY SAFETY SIGNAL DESIGN	DES: CTC DIG: CTC CHK: A.F.E. 59237 ID= 030113424.14S	UNION PACIFIC RAILROAD 81ST STREET, ILLINOIS TO VILLA GROVE, ILLINOIS C.T.C. CIRCUITS Office of AVP Engineering - Design Omaha, Nebraska	DATE 11-15-06 SHEET 14 DWG 134.24 S-301

TIF ID= 030113424.14S.TIF

UNION SWITCH & SIGNAL, SWISSVALE, PA. T1116 SH. 929-11 PAGE

REV. 2-7-99 NEW CONNECTION TABLE TO AVS. M.P. 132.4 PER FIELD AC 12-15-98 CAC/CBL/NOTEBOOK	REV. 9-13-96 UPGRADE FAS-522 3-24-96 AFE 13053 BRC/SAB WPB JM	REV. 10-3-91 REPLACE CODE UNITS AFE 840423 WBB CDR/WDR	ST. LOUIS 12-15-76 DRAWN BY JAL CHECKED CORRECT WO 70329	U.P.R.R. DW 1342-43 PLACED IN SERVICE INSPECTED BY

S-301-M SH. 15

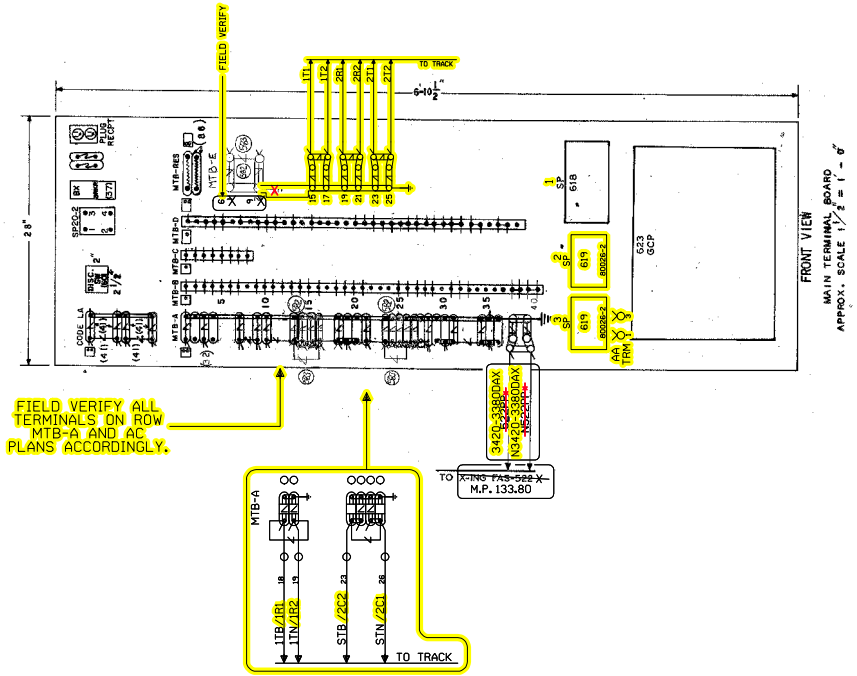

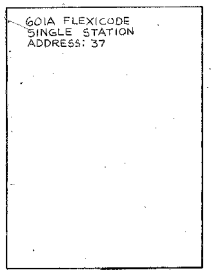

= EXISTING, REVISE ORIGINAL IF A.C.'d

= IN

= OUT

CTC/NDR

BLOCK, ILLINOIS
END OF SIDING
SIGNALS 1342L/R & 1343
M.P. 134.24
VILLA GROVE SUBDIVISION

						Designed: 12/12/08 INSTALL GATES AND EXTERNAL CROSSING CONTROLLER AT CR 12 M.P. 133.80 Rec*: WO*: 89231 IS: /WSD /CTC/JJF	5 11-15-06 M.P. 135.60 A.F.E. 59237 / /CTC/RDD	UNION PACIFIC SAFETY QUALITY PRODUCTIVITY SIGNAL DESIGN	DES: CTC DIG: CTC CHK: A.F.E. 59237 ID= 030113424.15S	UNION PACIFIC RAILROAD 81ST STREET, ILLINOIS TO VILLA GROVE, ILLINOIS C.T.C. CIRCUITS Office of AVP Engineering - Design Omaha, Nebraska	DATE 11-15-06 SHEET 15 DWG 134.24 S-301

TIF ID= 030113424.15S.TIF

UNION SWITCH & SIGNAL, SWISSVALE, PA. TIIIG SH. 929-12 PAGE

REV. 2-1-99 NEW CONNECTION TRACK TO N.S. M.P. 131.9 PER FIELD AC 12-15-98 CDR/CDL/JJW/RDD	REV. 10-3-91 ADD TWO TRACK RESTORATION REV. PER AC CDR/FAP	REV. 10-3-91 REPLACE CODE UNITS AFE 840423 CDR/WBB	ST. LOUIS 12-15-76 DRAWN BY JAL CHECKED AFE 770329 7-11-78	U.P.R.R.CO. DW 1342-43 PLACED IN SERVICE INSPECTED BY

S-301-M
SH. 16

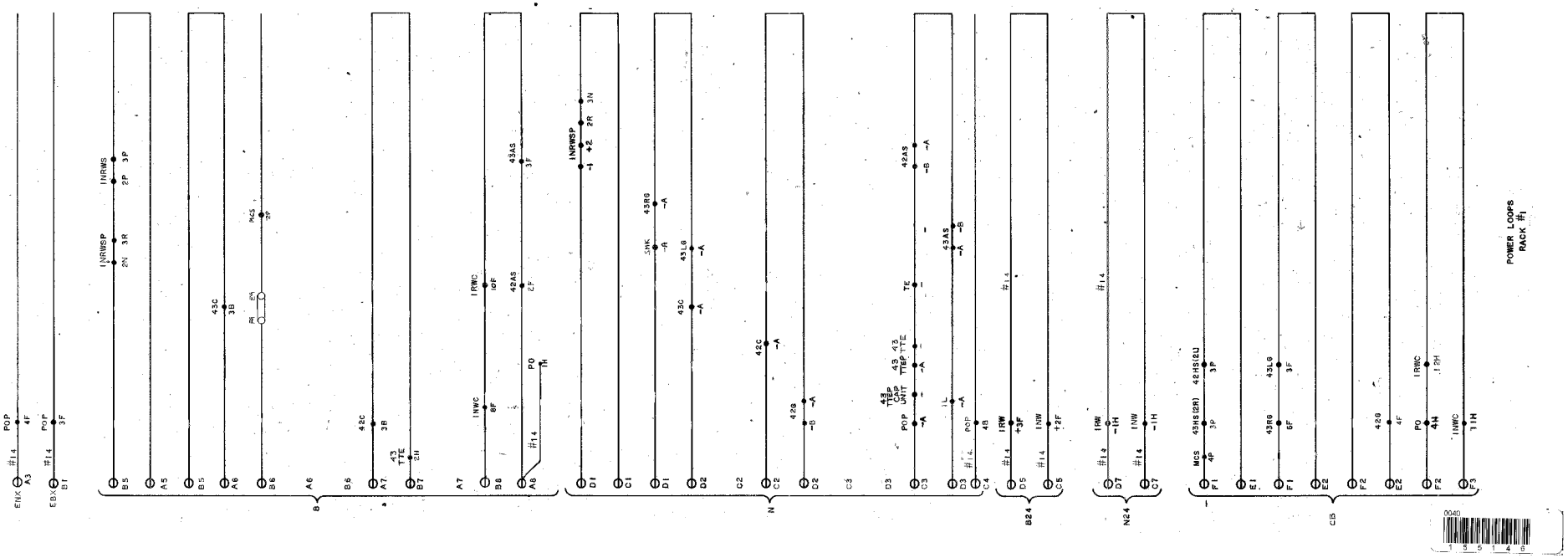

BLOCK, ILLINOIS
END OF SIDING
SIGNALS 1342L/R & 1343
M.P. 134.24
VILLA GROVE SUBDIVISION

Designed: 12/12/08	5	11-15-06	UNION PACIFIC	DES: CTC	UNION PACIFIC RAILROAD
M.P. 133.80	M.P. 135.60 A.F.E. 59237		QUALITY PRODUCTIVITY SAFETY	DIG: CTC	81ST STREET, ILLINOIS TO VILLA GROVE, ILLINOIS C.T.C. CIRCUITS
Rec#: WO#: 89231				CHK:	
IS: / /CTC/JJF	/ /CTC/RDD		SIGNAL DESIGN	A.F.E. 59237	
				ID= 030113424.16S	Office of AVP Engineering - Design Omaha, Nebraska

DATE 11-15-06
SHEET 16
DWG 134.24
S-301

TIF ID= 030113424.16S.TIF

REV. 2-1-99 MEW CONNECTION TRACK TO NS M.P. 132.9 PER FIELD NC 12-15-99 CAC/RDD/JJF/RDD	REV. 10-3-91 ADD TWO TRACK RESTORATION WJS CDR/	REV. 12-3-91 REPLACE CODE UNITS AFE 840423 WSB CDR/WJM	ST. LOUIS 12-15-76 DRAWN BY JAL CHECKED AFE 770329 7-11-76	U.P.R.R. C.O. DW 1342-43 PLACED IN SERVICE INSPECTED BY	PAGE S-301-M SH. 17

UNION SWITCH & SIGNAL, SWISSVALE, PA. T1116 SH. 929-13

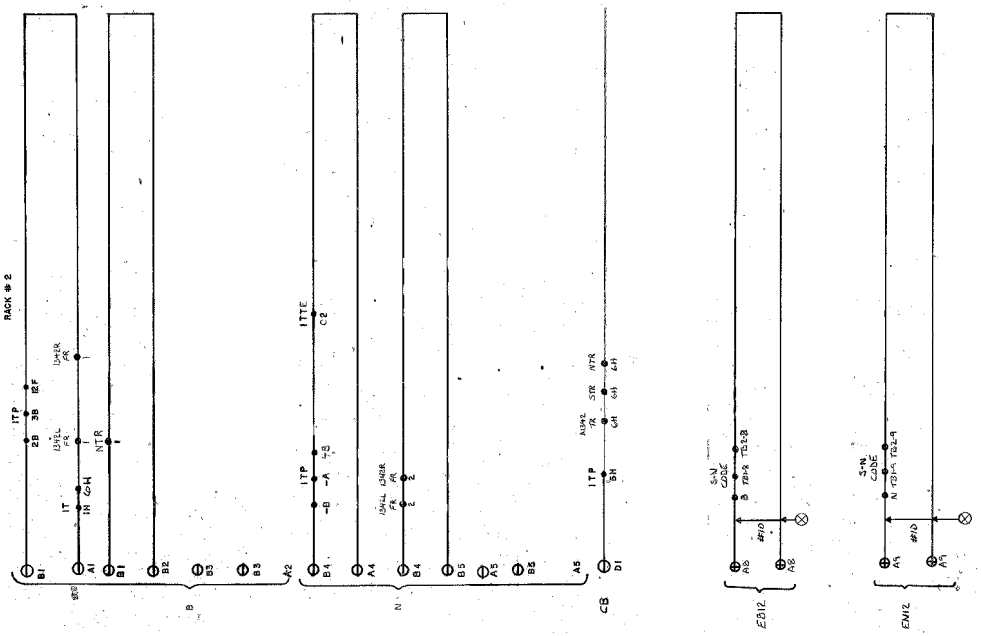

POWER LOOPS
RACK #2 & MAIN TERMINAL BRD.

BLOCK, ILLINOIS
END OF SIDING
SIGNALS 1342L/R & 1343
M.P. 134.24
VILLA GROVE SUBDIVISION

Designed: 12/12/08	5 11-15-06	UNION PACIFIC	DES: CTC	UNION PACIFIC RAILROAD	DATE 11-15-06
M.P. 133.80	M.P. 135.60 A.F.E. 59237	QUALITY PRODUCTIVITY SAFETY	DIG: CTC	81ST STREET, ILLINOIS TO VILLA GROVE, ILLINOIS C.T.C. CIRCUITS	SHEET 17
Rec#: WO#: 89231			CHK:		DWG 134.24
IS: / /CTC/JJF	/ /CTC/RDD	SIGNAL DESIGN	A.F.E. 59237	Office of AVP Engineering - Design Omaha, Nebraska	S-301
			ID= 030113424.17S		

TIF ID= 030113424.17S.TIF

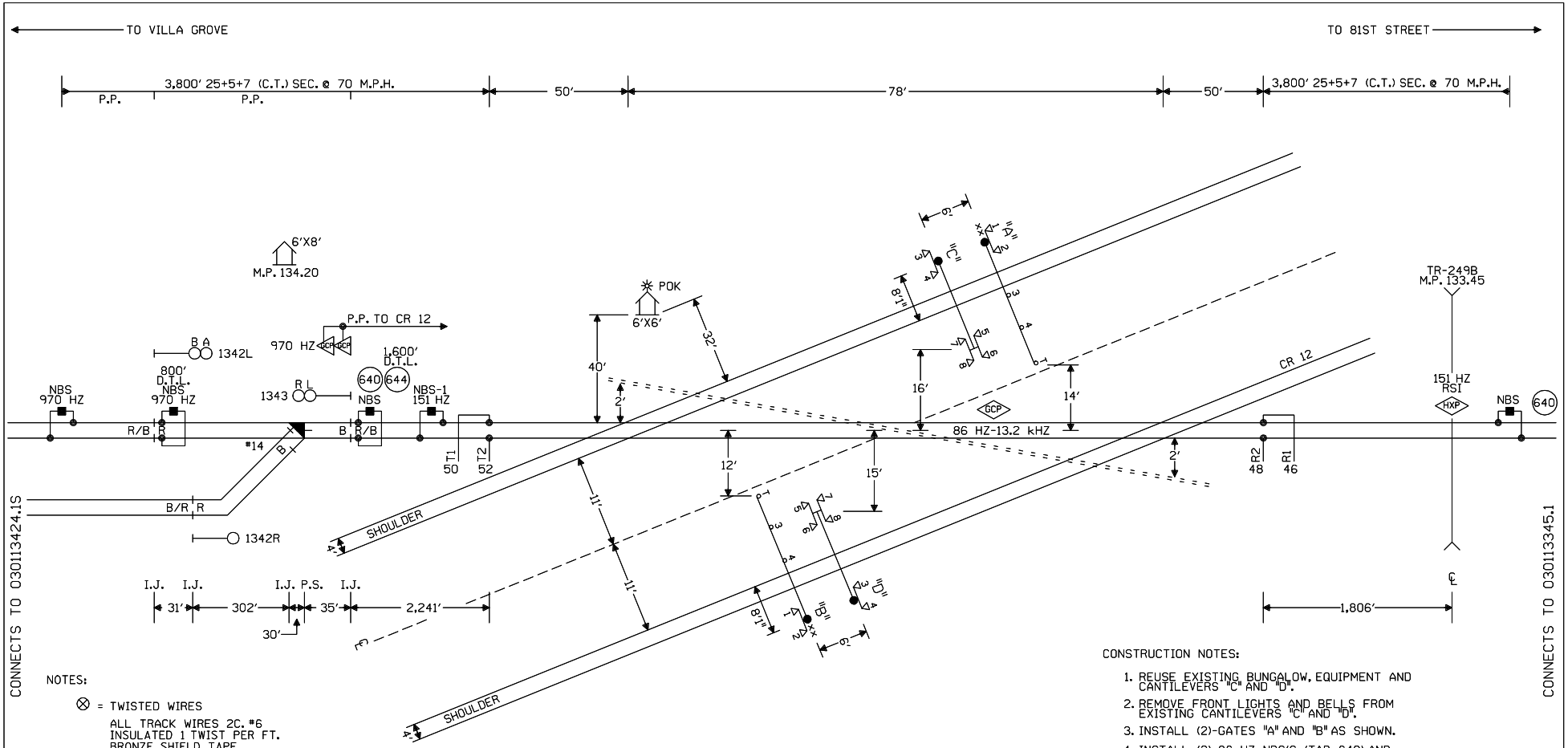

NOTES:

⊗ = TWISTED WIRES

ALL TRACK WIRES 2C. #6
INSULATED 1 TWIST PER FT.
BRONZE SHIELD TAPE
POLYETHYLENE JACKET
UNLESS OTHERWISE SPECIFIED

TRANSMITTER AND RECEIVER LEADS
TO BE SEPARATED BY AT LEAST 12" IN TRENCH,
LENGTHS SHOULD NOT EXCEED MANUFACTURER'S
RECOMMENDATION.

TOP OF FOUNDATION TO BE AT SAME ELEVATION
AS THE SURFACE OF THE TRAVELED WAY & NO
MORE THAN 4" ABOVE THE SURFACE OF THE GROUND.

ALL BUNGALOW WIRING TO BE #16 AWG FLEX
UNLESS OTHERWISE SPECIFIED EXCEPT ALL GROUND
WIRE TO BE #6 AWG FLEX OR LARGER

ALL WIRING IN GATE MECHANISM TO BE #10 "AWG FLEX".

REFER TO UP STANDARD DWG FOR BUNGALOW GROUNDING.

ALL LIGHTS TO BE 12" ROUNDELS.

= = = = = = 4" X 70' CONDUIT ← EXISTING

LIGHTS: LED LIGHTS

GATE A: 19'
GATE B: 19'
CANT C: 14'
CANT D: 14' ← EXISTING

xx = BELL

CRTU DIGITAL ← FIELD VERIFY

CONSTRUCTION NOTES:

1. REUSE EXISTING BUNGALOW, EQUIPMENT AND CANTILEVERS "C" AND "D".
2. REMOVE FRONT LIGHTS AND BELLS FROM EXISTING CANTILEVERS "C" AND "D".
3. INSTALL (2)-GATES "A" AND "B" AS SHOWN.
4. INSTALL (2)-86 HZ NBS'S (TAB 640) AND (1)-1,600' DTL (TAB 644).
5. INSTALL THE FOLLOWING EQUIPMENT:

   (1)-SSCC III PLUS EXTERNAL CROSSING CONTROLLER (TAB 660)
   (1)-40 AMP RECTIFIER (TAB 577)
   (1)-LAMP BATTERY (TAB B18)
   (1)-POK LIGHT (TAB 925)

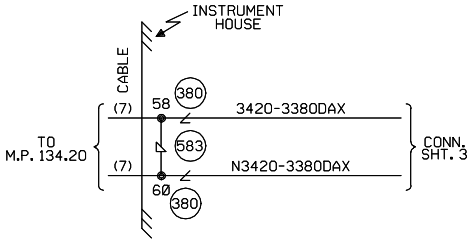

W(S) ← → E(N)

CABLE TABULATION

CABLE NO.7 7C.NO.14 U.G.B.T. HOUSE TO M.P. 134.20 ← EXISTING

NEW SHEET

					Designed: 12/12/08	MODIFICATION LEVEL		UNION PACIFIC	Date: 12-12-08	UNION PACIFIC RAILROAD	Sh.: 1
					INSTALL GATES AND EXTERNAL CROSSING CONTROLLER AT CR 12 M.P. 133.80	Q. A. LAST LEVEL CHECKED	DR	QUALITY PRODUCTIVITY SAFETY	Des: CTC	SIDNEY, ILLINOIS	DOT 166904D
						LAST LEVEL MOD THIS TYPICAL	DR		Chk: JTB	CR 12	MP: 133.80
						LAST LEVEL BY DESIGNER	DR	SIGNAL DESIGN	AFE: 89231	VILLA GROVE SUBDIVISION	ID: 030113380.1X
					Rec#: 15: WO#: 89231 WSD /CTC/JJF	CHANGED FROM TYPICAL?	Y			Office of Sr AVP Engineering - Signal/TCO Omaha, Nebraska	
						REV 02.01.09 4K 1TKBGC.1					

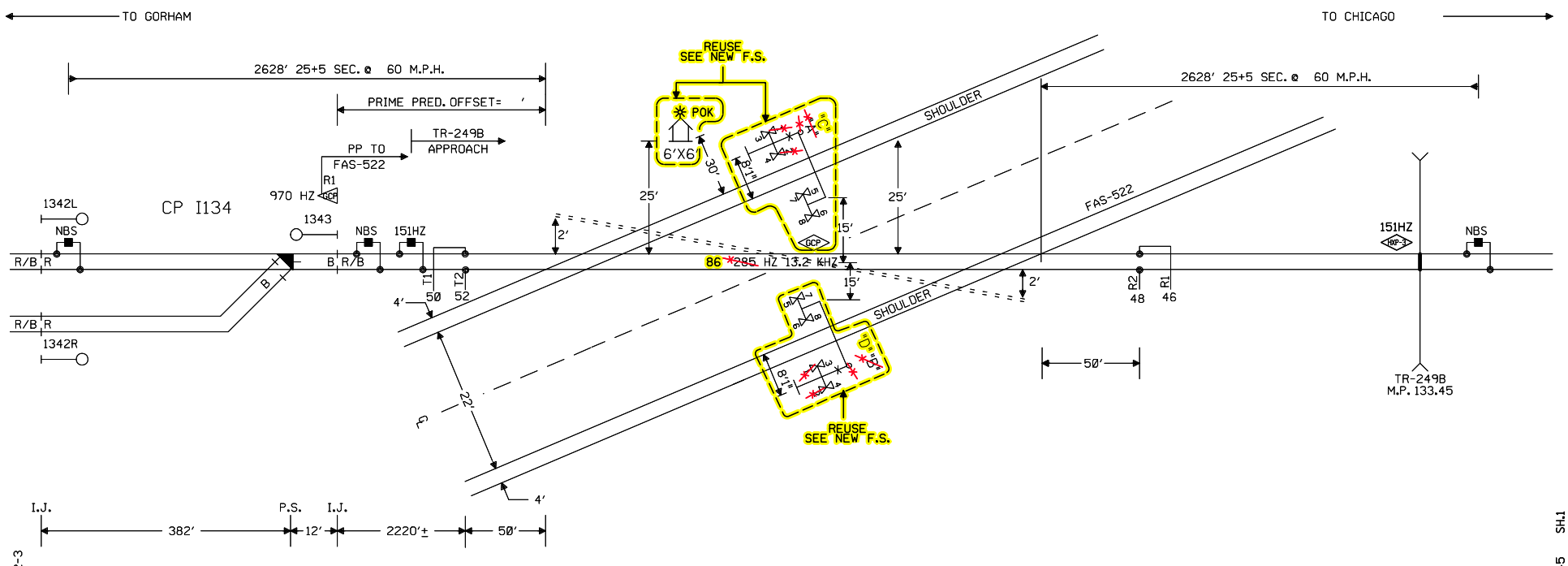

CONNECTS TO DRAWING 134.2-3

CONNECTS TO DRAWING 133.45 SH.1

NOTES:

⊗ = TWISTED WIRES

ALL TRACK WIRES 2C. #6
INSULATED 1 TWIST PER FT.
BRONZE SHIELD TAPE
POLYETHYLENE JACKET
UNLESS OTHERWISE SPECIFIED

TRANSMITTER AND RECEIVER LEADS
TO BE SEPARATED BY AT LEAST 12" IN TRENCH,
LENGTHS SHOULD NOT EXCEED MANUFACTURES
RECOMMENDATION.

TOP OF FOUNDATION TO BE AT SAME ELEVATION
AS THE SURFACE OF THE TRAVELED WAY & NO
MORE THAN 4" ABOVE THE SURFACE OF THE GROUND.

ALL BUNGALOW WIRING TO BE #16 AWG FLEX
UNLESS OTHERWISE SPECIFIED EXCEPT ALL GROUND
WIRE TO BE #6 AWG FLEX OR LARGER

REFER TO UP STANDARD DWG FOR BUNGALOW GROUNDING.

ALL LIGHTS TO BE 12" ROUNDELS.

==== 4" X 70' CONDUIT

LIGHTS: A & B 1,2 30°/15°
3,4 70°
5,6,7,8 20°/32°

CANT "A": 14'
CANT "B": 14'

S ←—○—→ N

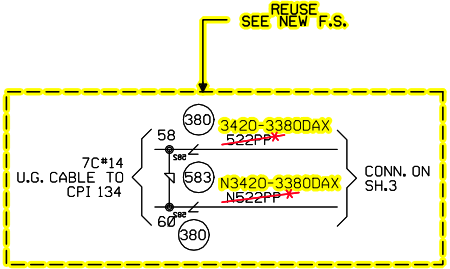

ALL OUT
EXCEPT AS SHOWN
"TO BE VOIDED"

= IN
= OUT
CTC/NDR

SIDNEY, ILLINOIS
FAS-522
M.P. 133.80
CHICAGO SUBDIVISION
D.O.T.#166 904D
PROJ.#

		Designed: 12/12/08 INSTALL GATES AND EXTERNAL CROSSING CONTROLLER AT CR 12 M.P. 133.80 Rec: WO: 89231 IS: /WSD /CTC/JJF	REV. 2-01-02 INSTALL CRTU W.O. 3327 8-12-01 JEC/WITT/WITT/EML	2 REV. 5-16-00 ADDED GATES AND CONSTANT WARNING DEVICE M.P. 133.45 W.O. #30982 3-22-00 JJF EB/WITT/HMM/JNM	1 REV. 6-25-96 REVISED PER FIELD A.C. AFE #13053 3-24-96 WPB BRC/SAB/JM	MODIFICATION LEVEL Q.A. LAST LEVEL CHK'D. AP LAST LEVEL MOD. THIS TYP. AP LAST LEVEL BY DESIGNER. 00 CHANGED FROM TYP.? Y/N	UNION PACIFIC QUALITY PRODUCTIVITY SAFETY SIGNAL DESIGN	DES: SAB ENG DIG: SAB ENG CHK: WPB A.F.E. 13053 ID= 030113380.1:1	UNION PACIFIC RAILROAD 81ST ST., CHICAGO, ILLINOIS TO CHAP, ILLINOIS C.T.C. CIRCUITS OFFICE OF CHIEF ENG'R OMAHA NEBR.	DATE 2-13-96 SHEET 1 DWG 133.80 S-301

(REV. 2-24-94) (1TKBC.1)