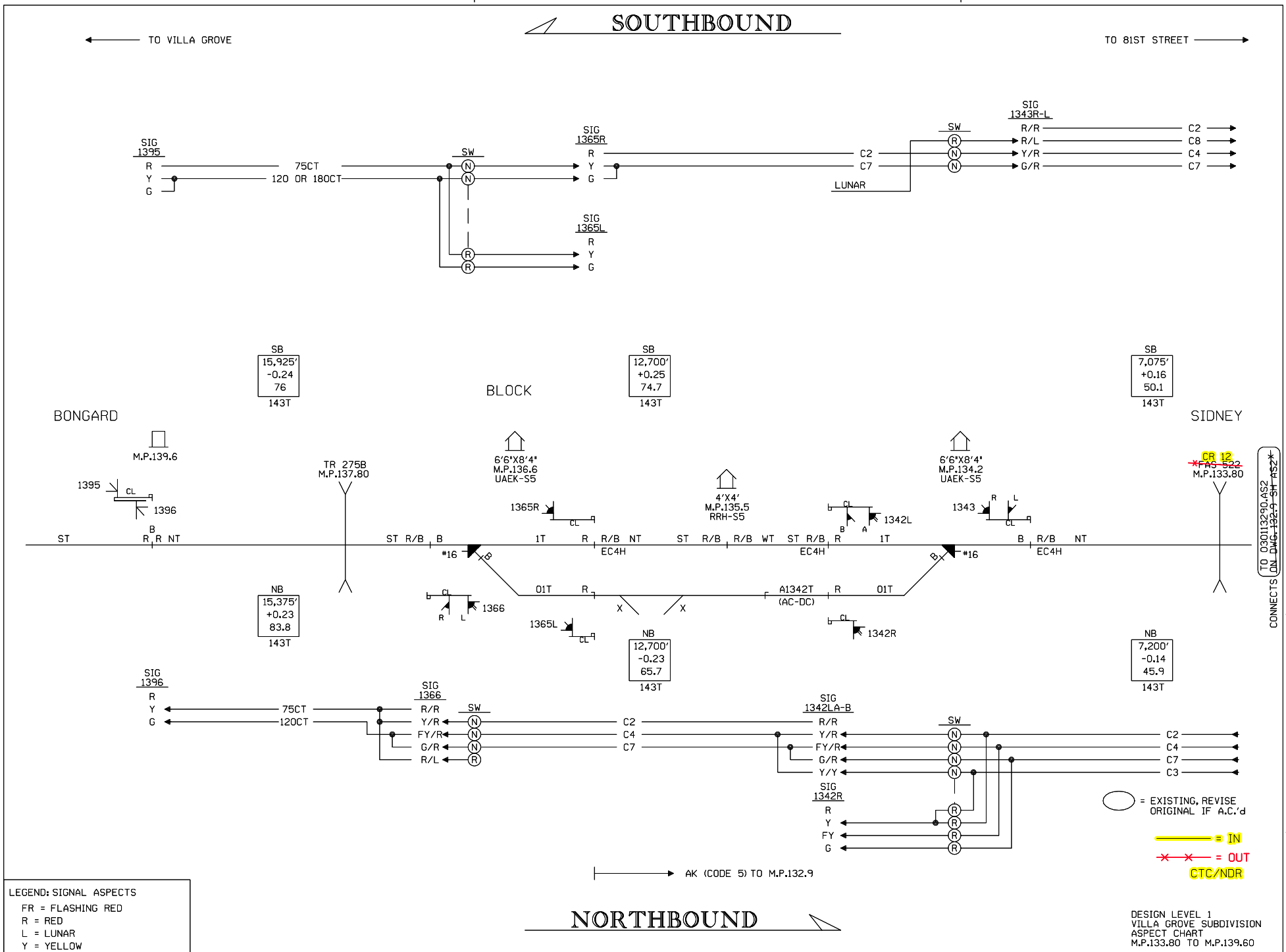

LEGEND: SIGNAL ASPECTS
FR = FLASHING RED
R = RED
L = LUNAR
Y = YELLOW
FY = FLASHING YELLOW
G = GREEN
R/R = DENOTES 2 UNIT SIGNAL
(N) = DENOTES NORMAL SWITCH
(R) = DENOTES REVERSE SWITCH

DESIGN LEVEL 1
VILLA GROVE SUBDIVISION
ASPECT CHART
M.P.133.80 TO M.P.139.60

Designed: 12/12/08
INSTALL GATES AND EXTERNAL CROSSING CONTROLLER AT CR 12 M.P. 133.80
Rec#: WO#: 89231
IS: /WSD /CTC/JJF

REV. 8-7-08
INSTALLED FLASHERS, GATES, & CWT AT TR-275B (MP 137.80).
W.O. #57015
REC. #15222
5-11-08 RLT
TLB/WITT/CTC/RDD

REV. 2-1-99
CONNECTION TRACK TO NS AT M.P.132.9 PER FIELD AC 12-15-98
CAC/CDL/NST/RCB

UNION PACIFIC
QUALITY PRODUCTIVITY SAFETY
SIGNAL DESIGN

DES:	NST
DIG:	NST
CHK:	CDL
A.F.E.	29530
ID:	030113290.AS1

UNION PACIFIC RAILROAD
81ST STREET, ILLINOIS
TO VILLA GROVE, ILLINOIS
C.T.C. CIRCUITS
Office of Sr.AVP Engineering - Signal/TCO OMAHA NEBR.

DATE	1-28-98
SHEET	AS1
DWG	132.90

S-301-M

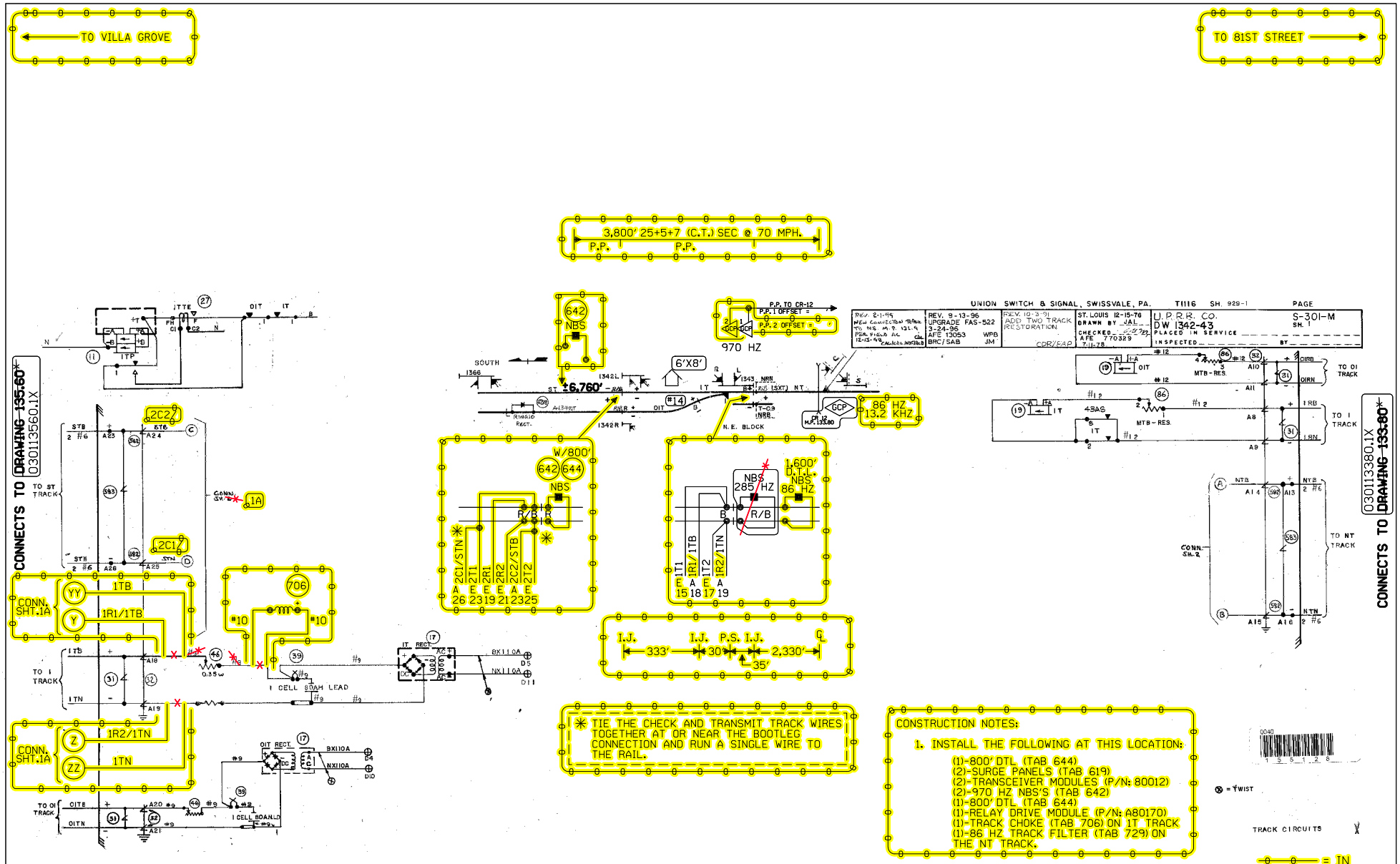

CONSTRUCTION NOTES:

1. INSTALL THE FOLLOWING AT THIS LOCATION:
   (1)-800' DTL (TAB 644)
   (2)-SURGE PANELS (TAB 619)
   (2)-TRANSCEIVER MODULES (P/N: 80012)
   (2)-970 HZ NBS'S (TAB 642)
   (1)-800' DTL (TAB 644)
   (1)-RELAY DRIVE MODULE (P/N: A80170)
   (1)-TRACK CHOKE (TAB 706) ON 1T TRACK
   (1)-86 HZ TRACK FILTER (TAB 729) ON THE NT TRACK.

* TIE THE CHECK AND TRANSMIT TRACK WIRES TOGETHER AT OR NEAR THE BOOTLEG CONNECTION AND RUN A SINGLE WIRE TO THE RAIL.

NOTES:

⊗ = TWISTED WIRES
ALL TRACK WIRES 2C. #6
INSULATED 1 TWIST PER FT.

TRANSMITTER AND RECEIVER LEADS TO BE SEPARATED BY AT LEAST 12" IN TRENCH, LENGTHS SHOULD NOT EXCEED MANUFACTURER'S RECOMMENDATION.

BLOCK, ILLINOIS
END OF SIDING
SIGNALS 1342L/R & 1343
M.P. 134.24
VILLA GROVE SUBDIVISION

Designed: 12/12/08
INSTALL GATES AND EXTERNAL CROSSING CONTROLLER AT CR 12 M.P. 133.80
Rec#: WO#: 89231
IS: /WSD /CTC/JJF

5 11-15-06
INSTALL FLS/GATES & CONSTANT WARNING AT TR 265B M.P. 135.60 A.F.E. 59237
/ /CTC/RDD

UNION PACIFIC
QUALITY PRODUCTIVITY SAFETY
SIGNAL DESIGN

DES:	CTC
DIG:	CTC
CHK:	
A.F.E.	59237
ID= 030113424.1S	

UNION PACIFIC RAILROAD

81ST STREET, ILLINOIS TO
VILLA GROVE, ILLINOIS
C.T.C. CIRCUITS

Office of AVP Engineering - Design Omaha, Nebraska

DATE	11-15-06
SHEET	1
DWG	134.24
	S-301

TIF ID= 030113424.1S.TIF

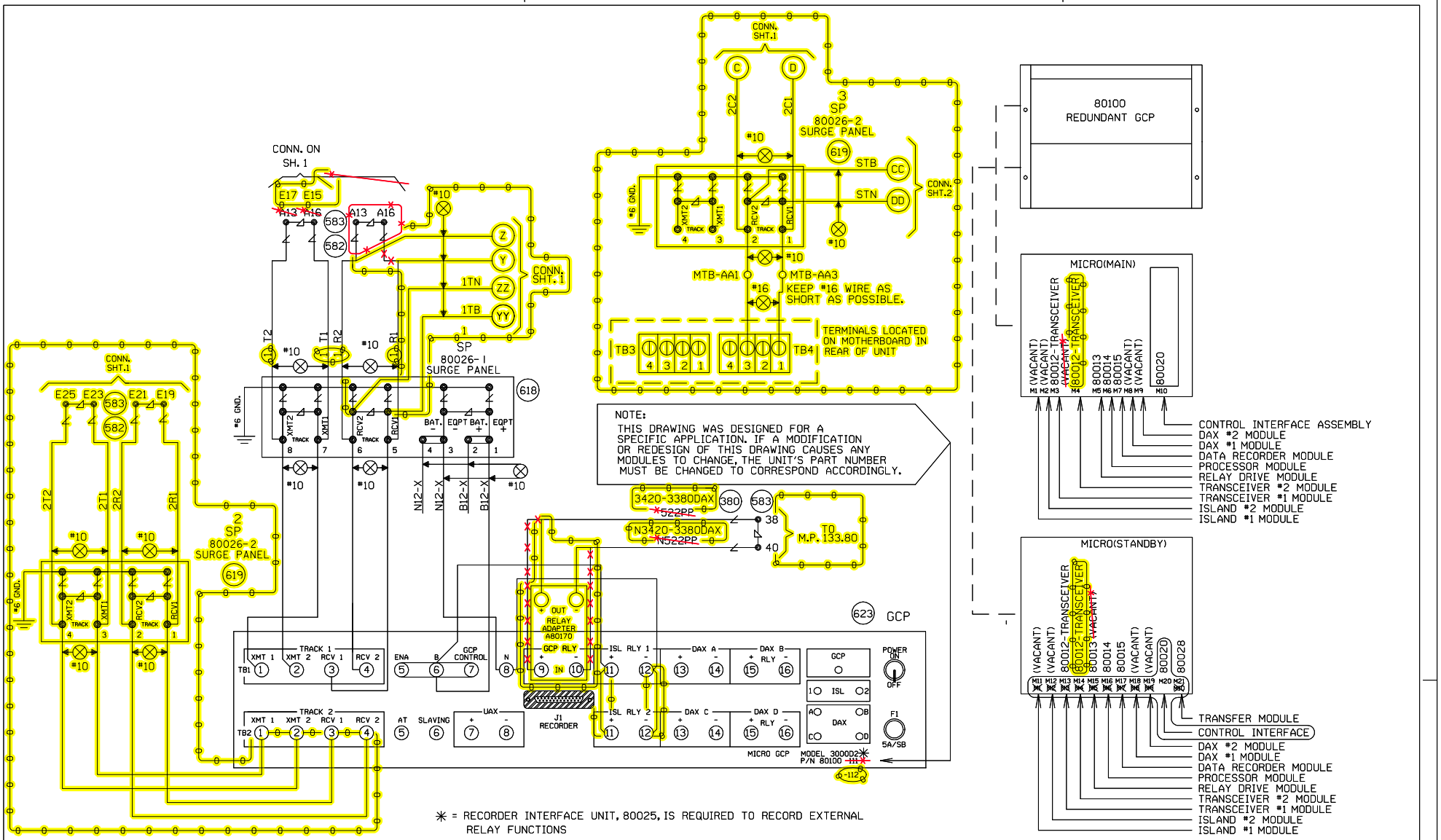

NOTE:
THIS DRAWING WAS DESIGNED FOR A SPECIFIC APPLICATION. IF A MODIFICATION OR REDESIGN OF THIS DRAWING CAUSES ANY MODULES TO CHANGE, THE UNIT'S PART NUMBER MUST BE CHANGED TO CORRESPOND ACCORDINGLY.

✳ = RECORDER INTERFACE UNIT, 80025, IS REQUIRED TO RECORD EXTERNAL RELAY FUNCTIONS

NOTE: EACH TRANSMITTER TO RAIL WIRE FROM TB1-1 AND TB1-2 MUST NOT EXCEED THE MAXIMUM LENGTH SPECIFIED IN THE TABLE SHOWN BELOW. THE RECEIVER WIRE LENGTH IS NOT CRITICAL. DOES NOT APPLY TO 6 TRACK WIRE APPLICATION.

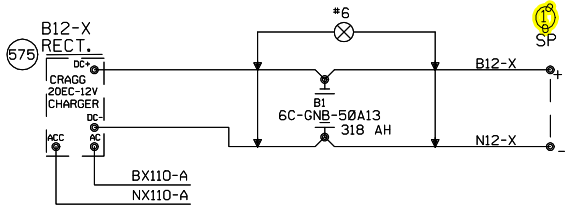

"Mf" FREQUENCY (HZ)	MAXIMUM TRANSMIT WIRE LENGTH (FEET)
86	100
114	125
156	150
211	200
285-~~790~~ 970	250

= EXISTING, REVISE ORIGINAL IF A.C.'d

= IN
CTC/JMW

= IN
= OUT
CTC/NDR

N.E. BLOCK, ILLINOIS
SIGNAL 1342-43
M.P. 134.2-3
CHICAGO SUBDIVISION
D.O.T.#
PROJ.#

SAFETRAN DWG. NO. AD87032

Designed 12/12/08
INSTALL GATES AND EXTERNAL CROSSING CONTROLLER AT CR 12 M.P. 133.80
Rec#: WO#: 89231
IS: WSD
/CTC/JJF

11-15-06
INSTALL FLS/GATES & CONSTANT WARNING AT TR 265B M.P. 133.80 A.F.E. 59237
/CTC/RDD

MODIFICATION LEVEL	
Q.A. LAST LEVEL CHK'D.	AU
LAST LEVEL MOD. THIS TYP.	AU
LAST LEVEL BY DESIGNER.	00
CHANGED FROM TYP.? Y/N	Y

UNION PACIFIC
QUALITY PRODUCTIVITY SAFETY
SIGNAL DESIGN

DES: JM
DIG: JM
CHK: WPB
A.F.E. 13053
ID=030113420.1A;1

UNION PACIFIC RAILROAD
81ST ST., ILLINOIS
TO VILLA GROVE, ILLINOIS
C. T. C. CIRCUITS
OFFICE OF CHIEF ENG'R OMAHA NEBR.

DATE 2-13-96
SHEET 1A
DWG 134.2-3
S-301-M

(REV. 6-1-94) (3K1TKBFC.3)

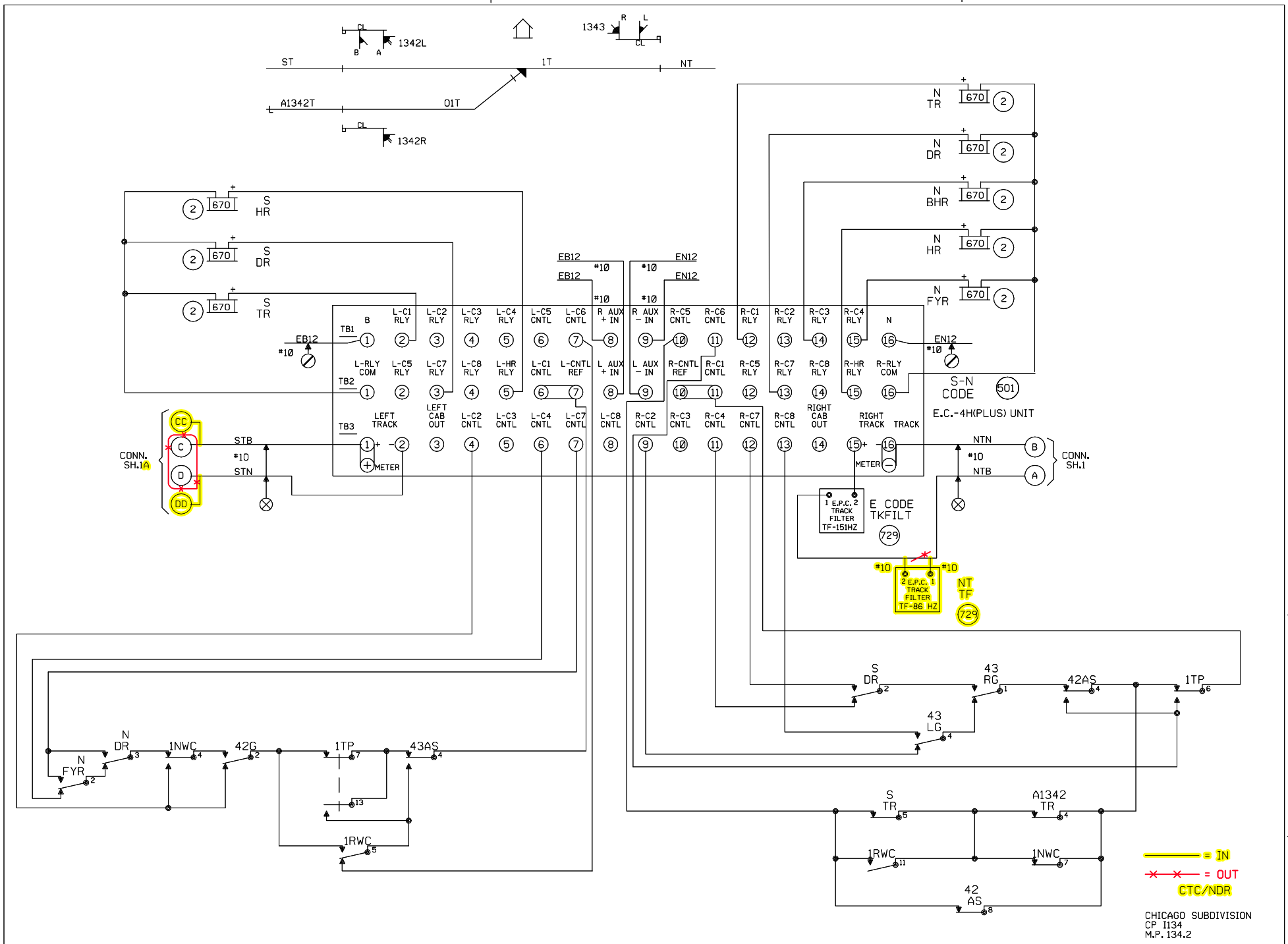

CHICAGO SUBDIVISION
CP I134
M.P. 134.2

Designed: 12/12/08 INSTALL GATES AND EXTERNAL CROSSING CONTROLLER AT CR 12 M.P. 133.80 Rec#: WO#: 89231 IS: /WSD / /CTC/JJF	3 11-15-06 M.P. 135.60 A.F.E. 59237 / /CTC/RDD	2 REV. 5-16-00 ADDED GATES AND CONSTANT WARNING DEVICE M.P. 133.45 W.O. #30982 3-22-00 JJF EB/WITT/HMM/JNM	REV. 2-1-99 NEW CONNECTION TRACK TO NS M.P. 132.9 PER FIELD AC 12-15-98 CAC/CDL/NST/RCB	MODIFICATION LEVEL Q.A. LAST LEVEL CHK'D. CF LAST LEVEL MOD. THIS TYP. CF LAST LEVEL BY DESIGNER. CH CHANGED FROM TYP.? Y/N Y	UNION PACIFIC QUALITY PRODUCTIVITY SAFETY SIGNAL DESIGN	DES: NST DIG: NST CHK: CDL A.F.E. 29530 ID= 030113424.2	UNION PACIFIC RAILROAD 81ST ST., ILLINOIS TO VILLA GROVE, ILLINOIS C.T.C. CIRCUITS OFFICE OF CHIEF ENG'R SIGNALS OMAHA NEBR.	DATE 3-6-98 SHEET 2 DWG 1342-43 S-301-M

(REV. 11/15/97) (RHE4CGP.3)

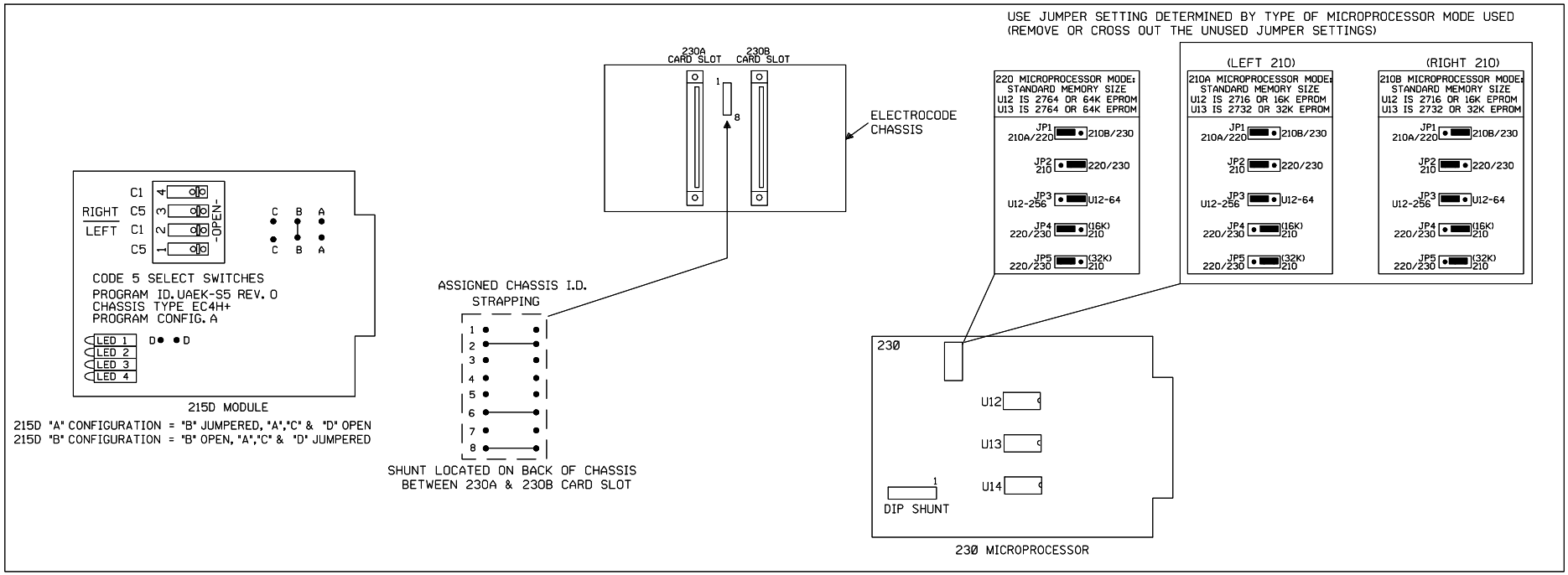

CHICAGO SUBDIVISION
CP I134
M.P. 134.2

Designed: 12/12/08	2	11-15-06	REV. 2-1-99 NEW CONNECTION TRACK TO NS M.P. 132.9 PER FIELD AC 12-15-98 CAC/CDL/NST/RCB	MODIFICATION LEVEL		UNION PACIFIC QUALITY PRODUCTIVITY SAFETY SIGNAL DESIGN	DES: NST	UNION PACIFIC RAILROAD 81ST STREET, ILLINOIS TO VILLA GROVE, ILLINOIS C.T.C. CIRCUITS	DATE 3-6-98
M.P. 133.80	M.P. 135.60 A.F.E. 59237			Q.A. LAST LEVEL CHK'D.	CF		DIG: NST		SHEET 2A
Rec#: WO#: 89231				LAST LEVEL MOD. THIS TYP.	CF		CHK: CDL		DWG 1342-43
IS: / /CTC/JJF	/ /CTC/RDD			LAST LEVEL BY DESIGNER.	CG		A.F.E. 29530		S-301-M
				CHANGED FROM TYP.? Y/N	Y		ID= 030113424.2A	OFFICE OF CHIEF ENG'R SIGNALS OMAHA NEBR.	

(REV. 11/15/97) (RHE4CGP.4A)

UNION SWITCH & SIGNAL, SWISSVALE, PA. T1116 SH. 929-3 PAGE

REV. 2-1-77 NEW CONNECTING TRACK TO NS M.P. 132.9 PER F.E.A. NC CDL 12-16-75 CK/KDA/MJT/RLS	ST. LOUIS 12-15-76 DRAWN BY J.A.L. CHECKED C.O.T.92 A.F.E. T.70329 7-11-78	U.P.R.R. CO. DW 1342-43 PLACED IN SERVICE INSPECTED BY	S-301-M SH. 3

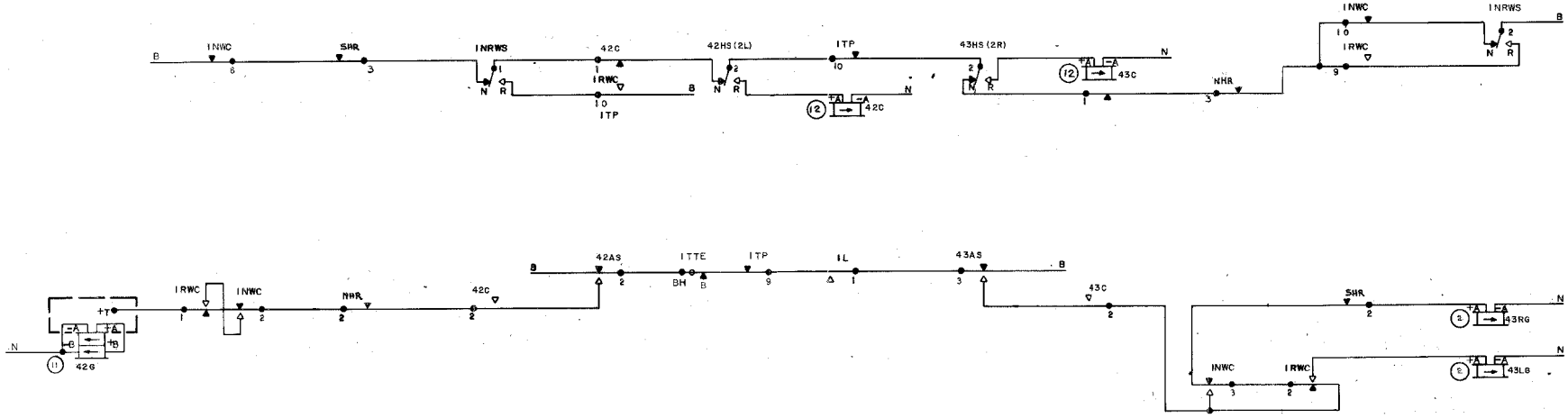

BLOCK, ILLINOIS
END OF SIDING
SIGNALS 1342L/R & 1343
M.P. 134.24
VILLA GROVE SUBDIVISION

						Designed: 12/12/08	3	11-15-06	UNION PACIFIC	DES: CTC	UNION PACIFIC RAILROAD
						M.P. 133.80	M.P. 135.60		QUALITY PRODUCTIVITY SAFETY	DIG: CTC	81ST STREET, ILLINOIS TO
						Rec#: WO#: 89231	A.F.E. 59237			CHK:	VILLA GROVE, ILLINOIS
						IS: / /CTC/JJF	/ /CTC/RDD		SIGNAL DESIGN	A.F.E. 59237	C.T.C. CIRCUITS
										ID= 030113424.3S	Office of AVP Engineering - Design Omaha, Nebraska

DATE	11-15-06
SHEET	3
DWG	134.24
	S-301

TIF ID= 030113424.3S.TIF

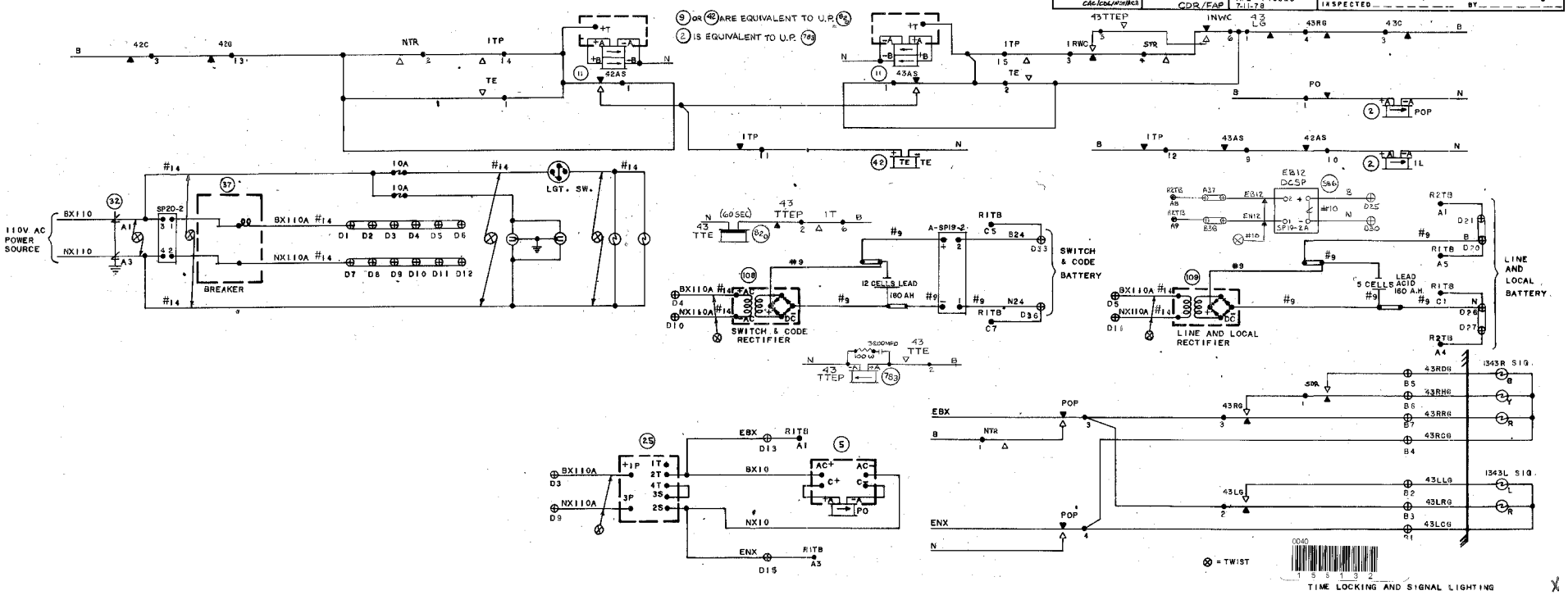

BLOCK, ILLINOIS
END OF SIDING
SIGNALS 1342L/R & 1343
M.P. 134.24
VILLA GROVE SUBDIVISION

						Designed: 12/12/08 M.P. 133.80 Rec#: WO#: 89231 IS: / /CTC/JJF	4 11-15-06 M.P. 135.60 A.F.E. 59237 / /CTC/RDD	UNION PACIFIC QUALITY PRODUCTIVITY SAFETY SIGNAL DESIGN	DES: CTC DIG: CTC CHK: A.F.E. 59237 ID= 030113424.4S

UNION PACIFIC RAILROAD

81ST STREET, ILLINOIS TO
VILLA GROVE, ILLINOIS
C.T.C. CIRCUITS

Office of AVP Engineering - Design Omaha, Nebraska

DATE 11-15-06
SHEET 4
DWG 134.24
S-301

TIF ID= 030113424.4S.TIF

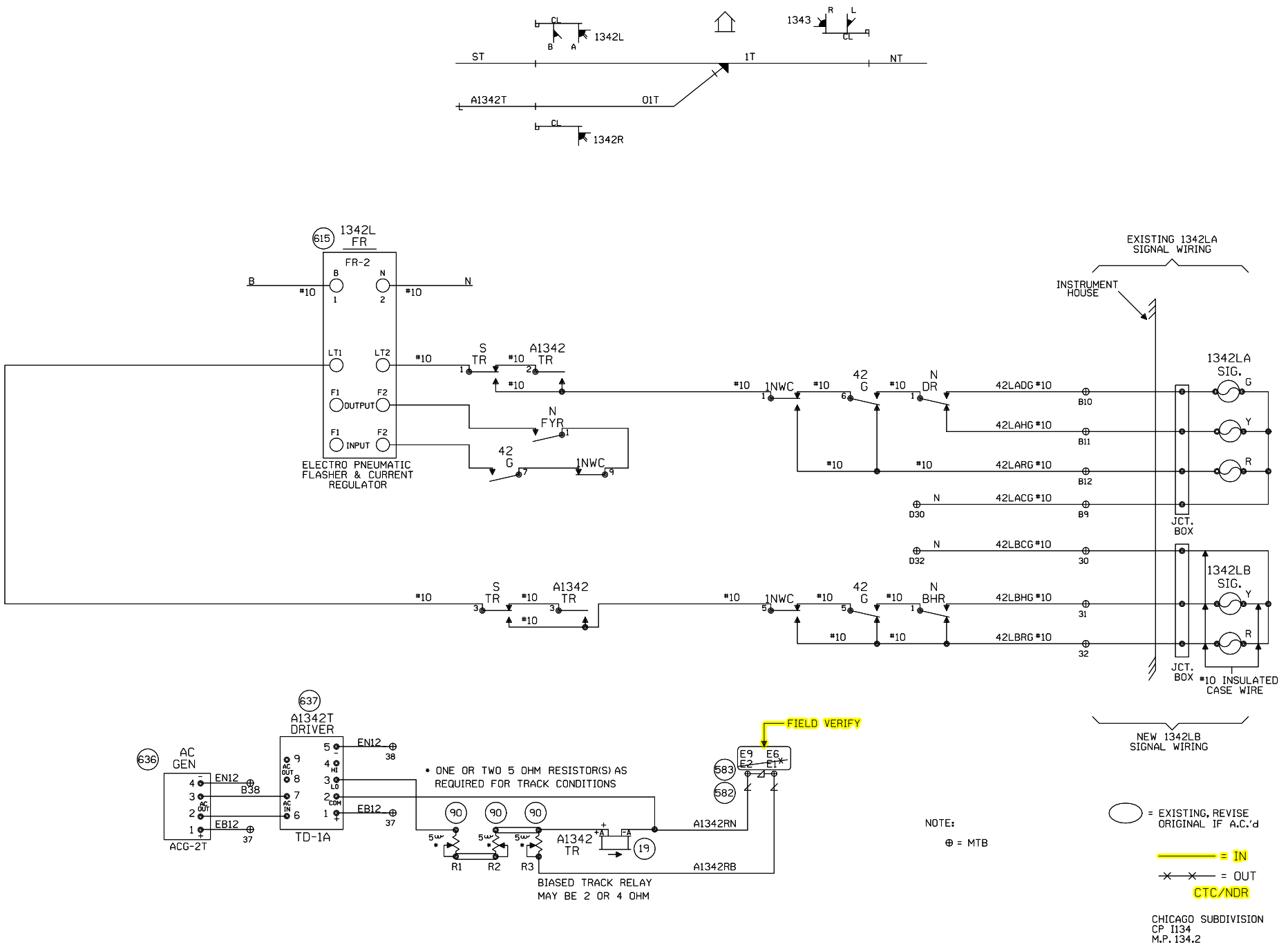

Designed: 12/12/08
INSTALL GATES AND EXTERNAL CROSSING CONTROLLER AT CR 12 M.P. 133.80
Rec*: 15: WO*: 89231 /WSD /CTC/JJF

2 11-15-06
M.P. 135.60
A.F.E. 59237
/ /CTC/RDD

REV. 2-1-99
NEW CONNECTION TRACK TO NS M.P. 132.9 PER FIELD AC 12-15-98
CAC/CDL/NST/RCB

MODIFICATION LEVEL	
Q.A. LAST LEVEL CHK'D.	CF
LAST LEVEL MOD. THIS TYP.	CF
LAST LEVEL BY DESIGNER.	CG
CHANGED FROM TYP.? Y/N	Y

UNION PACIFIC
QUALITY PRODUCTIVITY SAFETY
SIGNAL DESIGN

DES: NST
DIG: NST
CHK: CDL
A.F.E. 29530
ID= 030113424.4A

UNION PACIFIC RAILROAD
81ST STREET, ILLINOIS
TO VILLA GROVE, ILLINOIS
C.T.C. CIRCUITS
OFFICE OF CHIEF ENG'R SIGNALS OMAHA NEBR.

DATE 3-6-98
SHEET 4A
DWG 1342-43
S-301-M

(REV. 11/15/97) (RHE4CGP.8)

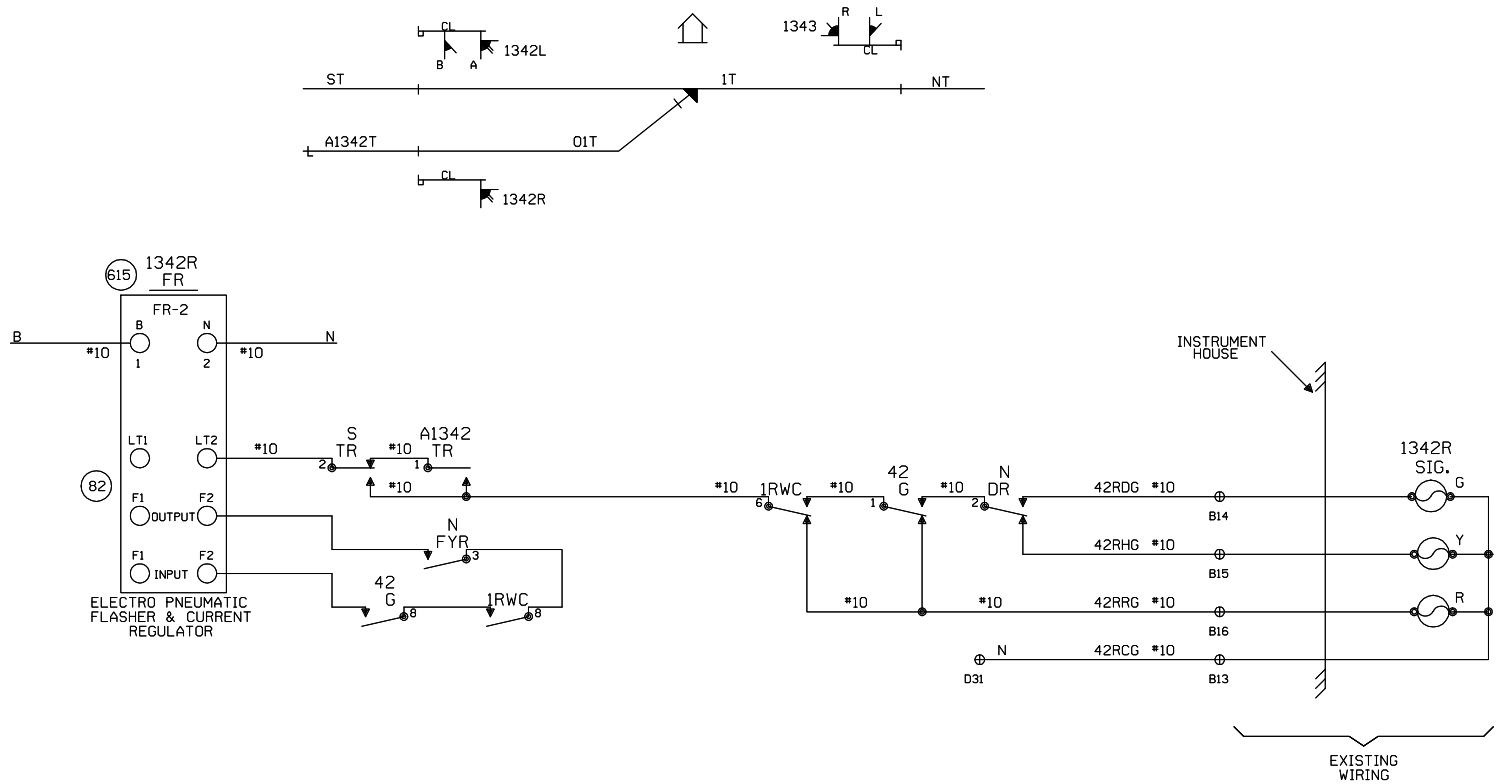

NOTE:

⊕ = MTB

CHICAGO SUBDIVISION
CP I134
M.P. 134.2

			Designed: 12/12/08 M.P. 133.80 Rec#: WO#: 89231 IS: / /CTC/JJF	2 11-15-06 M.P. 135.60 A.F.E. 59237 / /CTC/RDD	REV. 2-1-99 NEW CONNECTION TRACK TO NS M.P. 132.9 PER FIELD AC 12-15-98 CAC/CDL/NST/RCB	MODIFICATION LEVEL Q.A. LAST LEVEL CHK'D. CF LAST LEVEL MOD. THIS TYP. CF LAST LEVEL BY DESIGNER. CG CHANGED FROM TYP.? Y/N Y	UNION PACIFIC QUALITY PRODUCTIVITY SAFETY SIGNAL DESIGN	DES: NST DIG: NST CHK: CDL A.F.E. 29530 ID= 030113424.4B	UNION PACIFIC RAILROAD 81ST STREET, ILLINOIS TO VILLA GROVE, ILLINOIS C.T.C. CIRCUITS OFFICE OF CHIEF ENG'R SIGNALS OMAHA NEBR.	DATE 3-6-98 SHEET 4B DWG 1342-43 S-301-M

(REV. 11/15/97) (RHE4CGP.8)

UNION SWITCH & SIGNAL, SWISSVALE, PA. T1116 SH. 929-5 PAGE

REV 10-3-91 REPLACE CODE UNITS AFE 840423 WBB CDR/WDA	ST. LOUIS 12-15-76 DRAWN BY JAL CHECKED AFE 770329 7-11-78	U.P.R.R. CO. DW 1342-43 PLACED IN SERVICE INSPECTED BY	S-301-M SH. 5

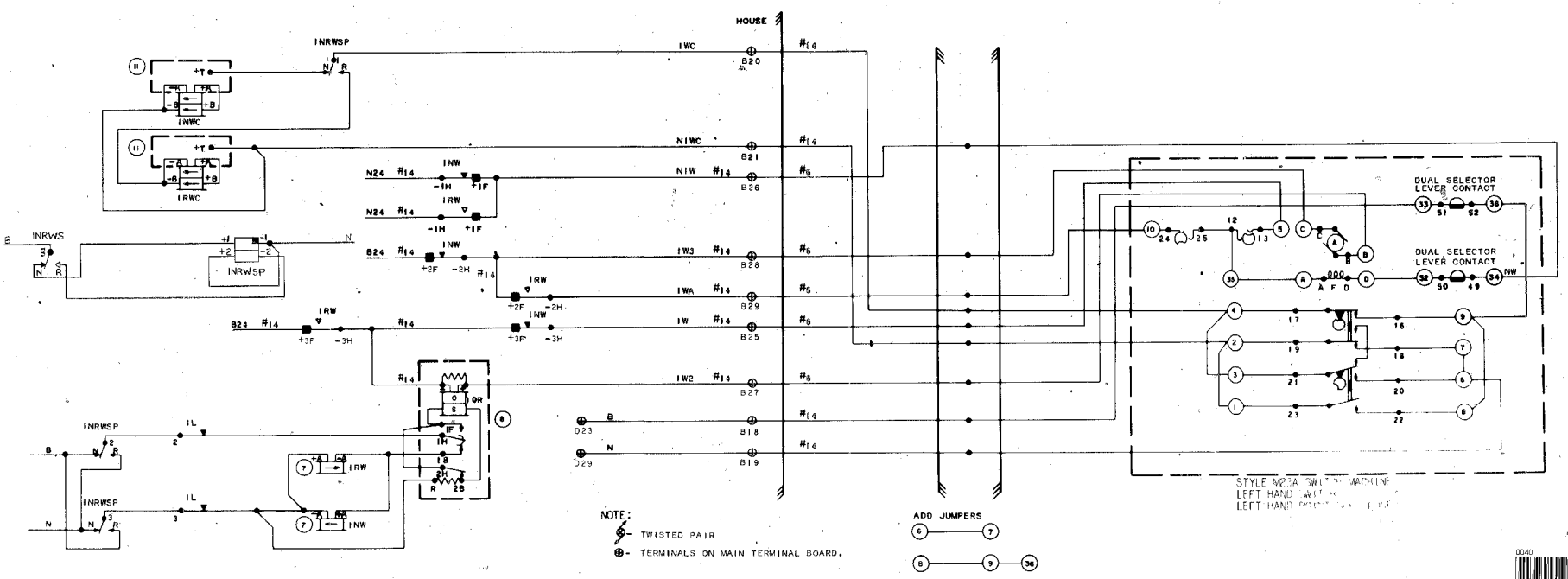

NOTE:
- TWISTED PAIR
- TERMINALS ON MAIN TERMINAL BOARD.

SWITCH CONTROL AND INDICATION

BLOCK, ILLINOIS
END OF SIDING
SIGNALS 1342L/R & 1343
M.P. 134.24
VILLA GROVE SUBDIVISION

						Designed: 12/12/08 M.P. 133.80 Rec#: WO#: 89231 IS: / /CTC/JJF	3 11-15-06 M.P. 135.60 A.F.E. 59237 / /CTC/RDD	UNION PACIFIC QUALITY PRODUCTIVITY SAFETY SIGNAL DESIGN	DES: CTC DIG: CTC CHK: A.F.E. 59237 ID= 030113424.5S	UNION PACIFIC RAILROAD 81ST STREET, ILLINOIS TO VILLA GROVE, ILLINOIS C.T.C. CIRCUITS Office of AVP Engineering - Design Omaha, Nebraska	DATE 11-15-06 SHEET 5 DWG 134.24 S-301

TIF ID= 030113424.5S.TIF

I134

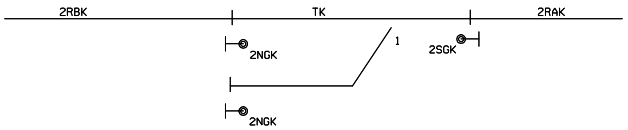

LOCATION	STA. NO.	ADDRESS						CONTROL CODE BIT								
		1	2	4	8	16	32	1	2	3	4	5	6	7	8	9
N.E. BLOCK	37	1	0	1	0	0	1	1NWS 1	1RWS 1			2RHS CLEAR1 STOP 0	2N CLEAR1 STOP 0		SM ON 1 OFF 0	MC ON 1 OFF 0
		INDICATION CODE BIT														
		1	2	3	4	5	6	7	8	9	10	11	12	13	14	15
		1NWK	1RWK			2SGK	2NGK		2RBK	TK		2RAK		42RAK	SMK	POK

OFFICE TO FIELD FUNCTION ASSIGNMENT

N.E. BLOCK, IL.
LINE: IL05-US&S 601A
CHICAGO SUB.

FUNCTION ASSIGNMENT

Designed: 12/12/08
M.P. 133.80
Rec'd: 1st / /CTC/JJF
WO#: 89231

3 11-15-06
M.P. 135.60
A.F.E. 59237
/ /CTC/RDD

REV. 2-1-99
NEW CONNECTION
TO NS TRACK
M.P. 132.9
PER FIELD AC
12-15-98 CDL
CAC/CDL/NST/RCB

REV. 2-25-94
ADD 601A CODE
PER EMAC
CDL

UNION PACIFIC
QUALITY PRODUCTIVITY SAFETY
SIGNAL DESIGN

DES: EMAC
DIG: CDR
CHK: EMAC
A.F.E. 4205
ID=030113424.6

UNION PACIFIC RAILROAD
81ST ST., ILLINOIS
TO VILLA GROVE, ILLINOIS
C.T.C. CIRCUITS
OFFICE OF GEN'L SIGNAL ENG'R OMAHA NEBR.

DATE 11-13-91
SHEET 6
DWG 1342-43
S-301-M

I.S. 11-13-91