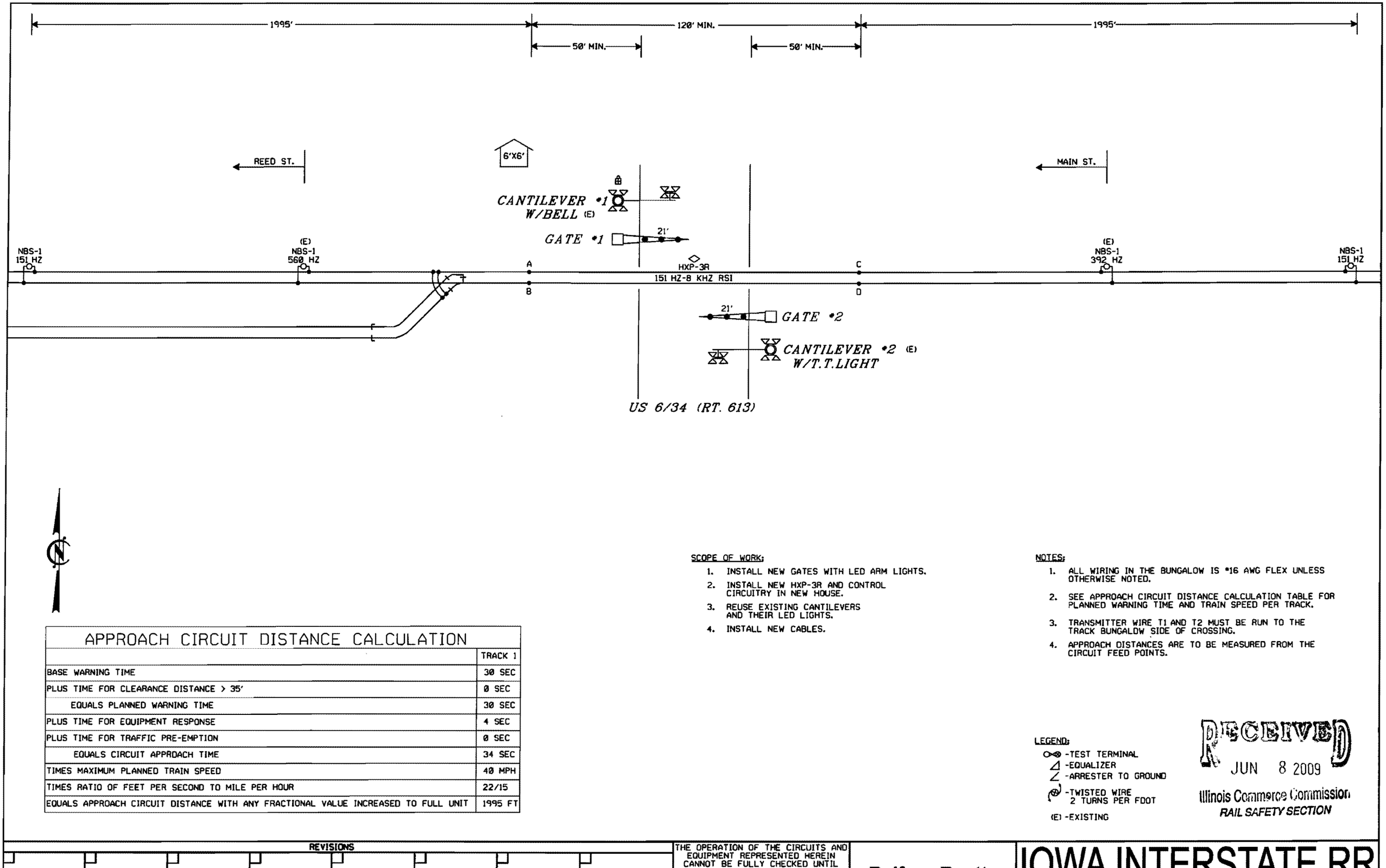

APPROACH CIRCUIT DISTANCE CALCULATION	
	TRACK 1
BASE WARNING TIME	30 SEC
PLUS TIME FOR CLEARANCE DISTANCE > 35'	0 SEC
EQUALS PLANNED WARNING TIME	30 SEC
PLUS TIME FOR EQUIPMENT RESPONSE	4 SEC
PLUS TIME FOR TRAFFIC PRE-EMPTION	0 SEC
EQUALS CIRCUIT APPROACH TIME	34 SEC
TIMES MAXIMUM PLANNED TRAIN SPEED	40 MPH
TIMES RATIO OF FEET PER SECOND TO MILE PER HOUR	22/15
EQUALS APPROACH CIRCUIT DISTANCE WITH ANY FRACTIONAL VALUE INCREASED TO FULL UNIT	1995 FT

SCOPE OF WORK:

1. INSTALL NEW GATES WITH LED ARM LIGHTS.
2. INSTALL NEW HXP-3R AND CONTROL CIRCUITRY IN NEW HOUSE.
3. REUSE EXISTING CANTILEVERS AND THEIR LED LIGHTS.
4. INSTALL NEW CABLES.

NOTES:

1. ALL WIRING IN THE BUNGALOW IS #16 AWG FLEX UNLESS OTHERWISE NOTED.
2. SEE APPROACH CIRCUIT DISTANCE CALCULATION TABLE FOR PLANNED WARNING TIME AND TRAIN SPEED PER TRACK.
3. TRANSMITTER WIRE T1 AND T2 MUST BE RUN TO THE TRACK BUNGALOW SIDE OF CROSSING.
4. APPROACH DISTANCES ARE TO BE MEASURED FROM THE CIRCUIT FEED POINTS.

LEGEND:

-TEST TERMINAL
-EQUALIZER
-ARRESTER TO GROUND
-TWISTED WIRE 2 TURNS PER FDOT
(E) -EXISTING

RECEIVED
JUN 8 2009
Illinois Commerce Commission
RAIL SAFETY SECTION

REVISIONS

THE OPERATION OF THE CIRCUITS AND EQUIPMENT REPRESENTED HEREIN CANNOT BE FULLY CHECKED UNTIL ALL CIRCUITS AND DEVICES ARE CONNECTED TO FORM A COMPLETE SYSTEM, OR AN EFFECTIVE SUBSYSTEM. SUCH SYSTEM OR SUBSYSTEM MUST BE GIVEN COMPLETE CIRCUIT AND OPERATIONAL TESTS BEFORE BEING PLACED IN REGULAR OPERATION.

Balfour Beatty Rail, Inc.

IOWA INTERSTATE RR

DRAWN: NAG
DESIGNED: D.M.R.
CHECKED: A.P.D.
DATE: 04-30-09

CROSSING TRACK PLAN
US 6/34 (RT. 613)
SHEFFIELD, ILLINOIS
DOT# 863 568U MILEPOST #136.34

DRAWING NO.
812326-100
SHEET 1 OF 13

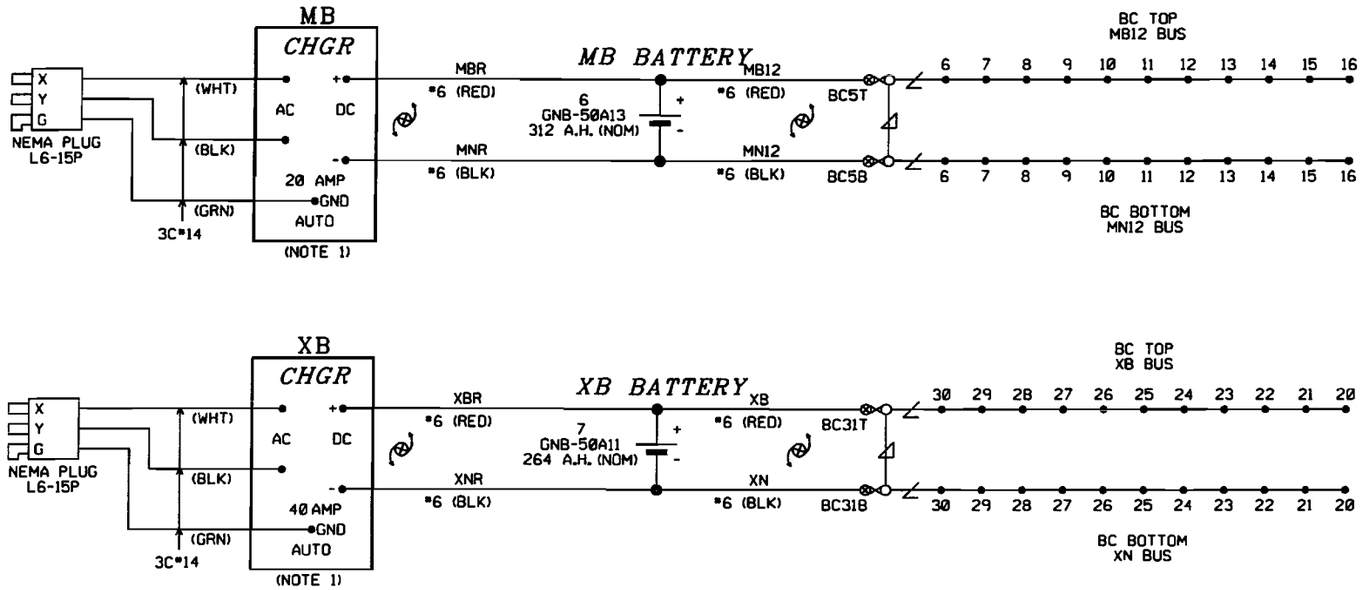

NOTES:
1. USE 240 VOLT SETTING.

REVISIONS

THE OPERATION OF THE CIRCUITS AND EQUIPMENT REPRESENTED HEREIN CANNOT BE FULLY CHECKED UNTIL ALL CIRCUITS AND DEVICES ARE CONNECTED TO FORM A COMPLETE SYSTEM, OR AN EFFECTIVE SUBSYSTEM. SUCH SYSTEM OR SUBSYSTEM MUST BE GIVEN COMPLETE CIRCUIT AND OPERATIONAL TESTS BEFORE BEING PLACED IN REGULAR OPERATION.

Balfour Beatty
Rail, Inc.

IOWA INTERSTATE RR

DRAWN: NAG
DESIGNED: D.M.R.
CHECKED: A.P.D.
DATE: 04-30-09

BATTERY CIRCUITS
US 6/34 (RT. 613)
SHEFFIELD, ILLINOIS
DOT# 863 568U MILEPOST #136.34

DRAWING NO.
812326-100
SHEET 2 OF 13

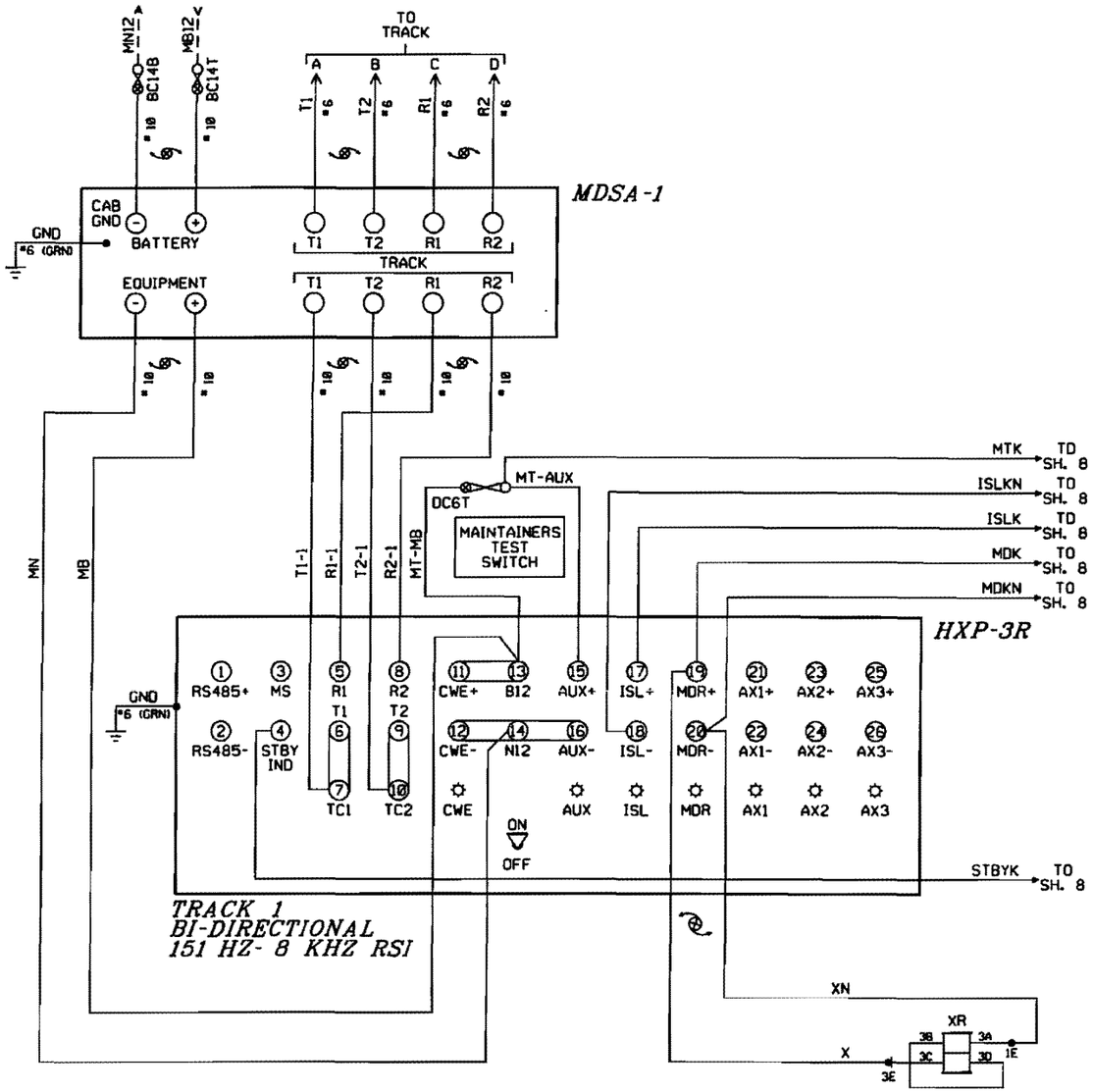

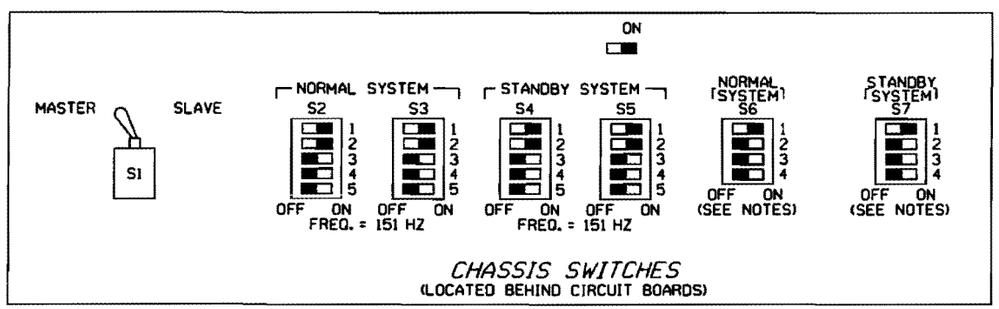

CHASSIS SWITCHES
(LOCATED BEHIND CIRCUIT BOARDS)

NOTES FOR S6 AND S7:

1) ACTUATOR 1 SELECTS NORMAL APPROACH WHEN SET TO ON POSITION.
2) WITH ACTUATOR 1 IN OFF POSITION ACTUATOR 2 SELECTS SHORT APPROACH WHEN OFF AND SELECTS VERY SHORT WHEN ON.
3) ACTUATOR 3 AND 4 RESERVED FOR FUTURE USE.

PROGRAM INFORMATION

PROGRAM VERSION 41.0 OR LATER

• = FIELD ADJUSTMENT TO BE MADE ACCORDING TO THE HXP-3 INSTRUCTION MANUAL.

HXP-3R ADJUSTMENTS

NO.	ADJUSTMENT NAME	TRACK 1
1	APP. LENGTH	1995'
2	WARNING TIME	30 SEC.
3	LIA	•
4	TC	•
5	MD RESTART	0

OPTION ADJUSTMENTS

NO.	ABBREVIATION	TRACK 1
1	TK-ENA	UP
2	TK FD	151 HZ
3	CW/MD	C
4	UNI-BI	b (BI)
5	NBS-C	•
6	CWEWT	DL (80 SEC.)
7	LOS	DL (16 SEC.)
8	IJ-LOS	DL (5 SEC.)
9	BC	129 •
10	P-COMP	•
11	AX1	NA
12	AX2	NA
13	AX3	NA
17	MDR-AX	"dn"
	OF-TK 1 OR 2	DL (0)
	CJ-LOS	DL (0)
	PJ-DET	DL (15)
	PJ-RX	DL (15)
18	MD-TMR	DL (10)
19	MIN-WT	DL (0)
20	FS-DET	"dn"
	FS-RX	DL (0)
	FS-TM	DL (10)
21	POS-ST	"dn"
	POS-RX	DL (0)
	POS-TM	DL (0)
22	AR-TMR	"dn"
	AR-RX	DL (0)
	AR-TM	DL (10)
47	ATO-RX	UP
48	PF-ENA	UP

AX ADJUSTMENTS

NO.	ABBREVIATION	AX 1	AX 2	AX 3
1	TK-ASN			
2	OF-TK1			
3	WT			
4	MD-RST			
5	CW/MD			
6	CJ-LOS			
7	PJ-DET			
8	PJ-RX			
9	POS-ST			

CIRCUIT BOARD INFORMATION

SWITCH OR JUMPER	TRACK 1
RSI FAULT JUMPER	0
RSI-LOS JUMPER	1
TLM W1 JUMPER	PINS 1-2
TLM W2 JUMPER	PINS 1-2
TLM W3 JUMPER	PINS 2-3
TLM MINUTE TIMEOUT	5 MIN
RYD CW/MD	CW
TLM STANDBY/AUTO/NORMAL	AUTO

NOTE: DL= DEFAULT LEVEL
NA= NON APPLICABLE

REVISIONS

THE OPERATION OF THE CIRCUITS AND EQUIPMENT REPRESENTED HEREIN CANNOT BE FULLY CHECKED UNTIL ALL CIRCUITS AND DEVICES ARE CONNECTED TO FORM A COMPLETE SYSTEM, OR AN EFFECTIVE SUBSYSTEM. SUCH SYSTEM OR SUBSYSTEM MUST BE GIVEN COMPLETE CIRCUIT AND OPERATIONAL TESTS BEFORE BEING PLACED IN REGULAR OPERATION.

Balfour Beatty Rail, Inc.

IOWA INTERSTATE RR

DRAWN: NAG
DESIGNED: D.M.R.
CHECKED: A.P.D.
DATE: 04-30-09

HXP-3R CIRCUITS
US 6/34 (RT. 613)
SHEFFIELD, ILLINOIS
DOT# 863 568U MILEPOST #136.34

DRAWING NO. 812326-100
SHEET 3 OF 13

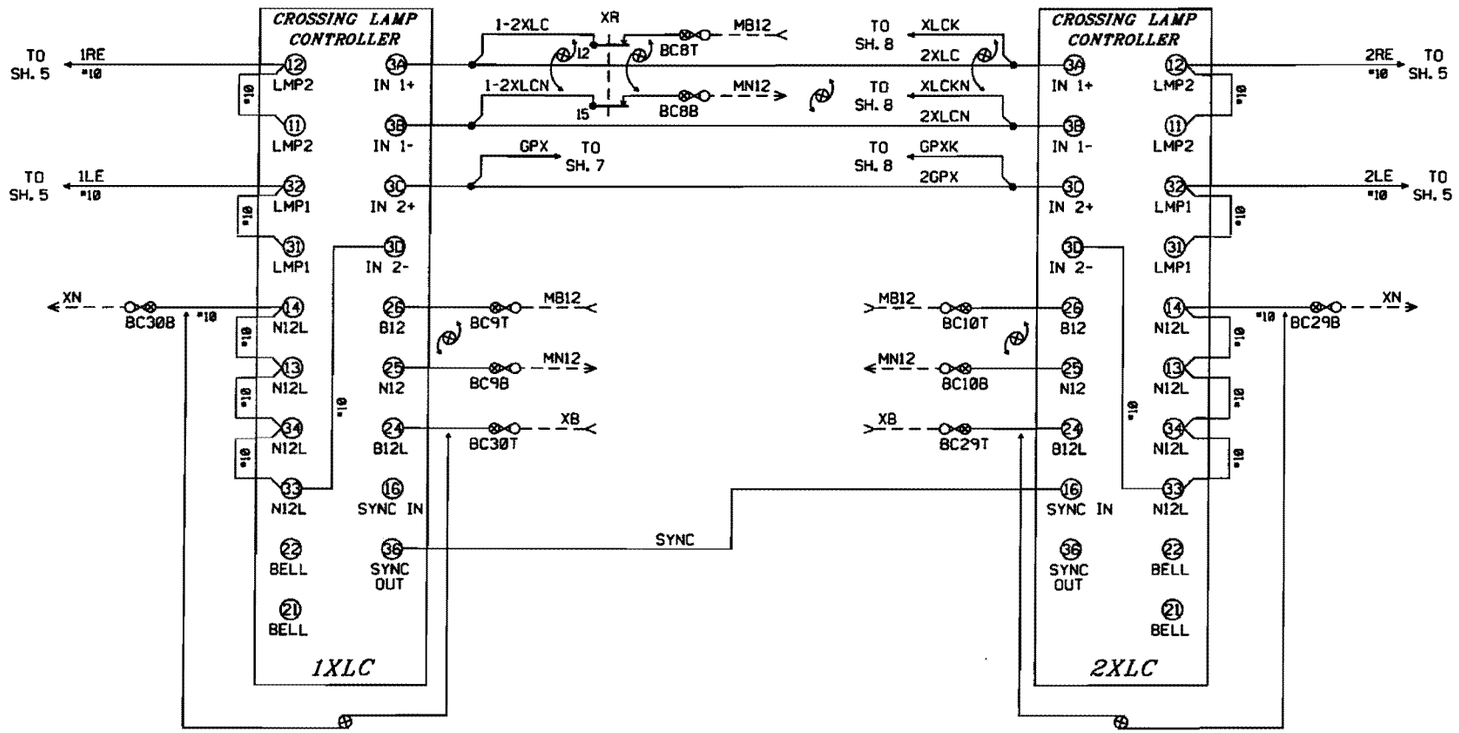

REVISIONS

THE OPERATION OF THE CIRCUITS AND EQUIPMENT REPRESENTED HEREIN CANNOT BE FULLY CHECKED UNTIL ALL CIRCUITS AND DEVICES ARE CONNECTED TO FORM A COMPLETE SYSTEM, OR AN EFFECTIVE SUBSYSTEM. SUCH SYSTEM OR SUBSYSTEM MUST BE GIVEN COMPLETE CIRCUIT AND OPERATIONAL TESTS BEFORE BEING PLACED IN REGULAR OPERATION.

Balfour Beatty
Rail, Inc.

IOWA INTERSTATE RR

DRAWN: NAG
DESIGNED: D.M.R.
CHECKED: A.P.D.
DATE: 04-30-09

FLASHING CONTROL
US 6/34 (RT. 613)
SHEFFIELD, ILLINOIS
DOT# 863 568U MILEPOST #136.34

DRAWING NO.
812326-100
SHEET 4 OF 13

NOTES:

1. GETS-GS P/N 076045-300 FOR USE WITH RECO EZLED LAMPS AND PLUG CABLES.
2. = LED SIGNAL LAMP WITH 8.5 TO 16 VOLT WORKING VOLTAGE.

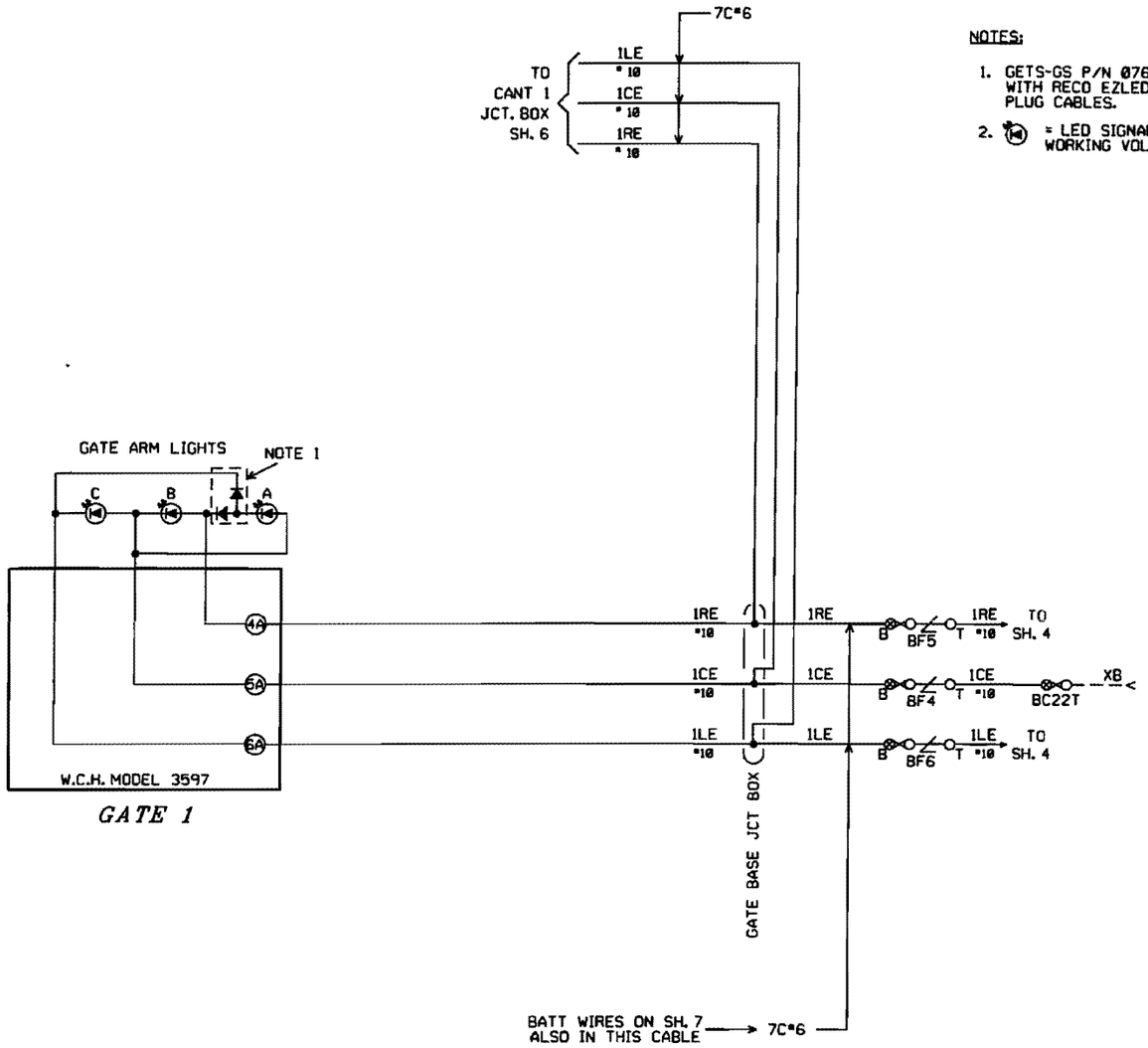

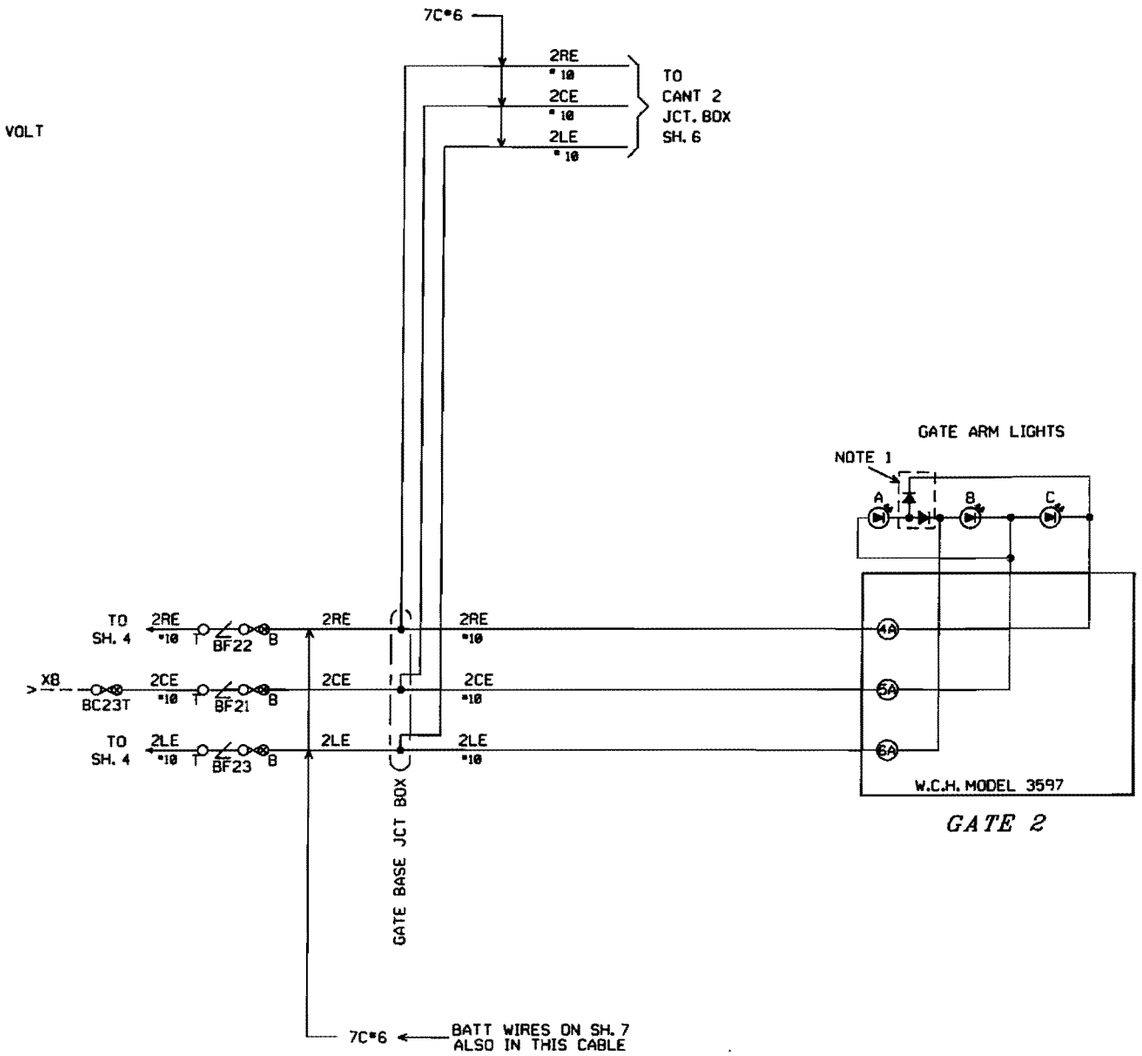

GATE *1 C B A

A B C GATE *2

REVISIONS

THE OPERATION OF THE CIRCUITS AND EQUIPMENT REPRESENTED HEREIN CANNOT BE FULLY CHECKED UNTIL ALL CIRCUITS AND DEVICES ARE CONNECTED TO FORM A COMPLETE SYSTEM, OR AN EFFECTIVE SUBSYSTEM. SUCH SYSTEM OR SUBSYSTEM MUST BE GIVEN COMPLETE CIRCUIT AND OPERATIONAL TESTS BEFORE BEING PLACED IN REGULAR OPERATION.

Balfour Beatty
Rail, Inc.

IOWA INTERSTATE RR

DRAWN: NAG DESIGNED: D.M.R. CHECKED: A.P.D. DATE: 04-30-09	CROSSING LAMP CIRCUITS US 6/34 (RT. 613) SHEFFIELD, ILLINOIS DOT# 863 568U MILEPOST #136.34	DRAWING NO. 812326-100 SHEET 5 OF 13

NOTE:

1. = LED SIGNAL LAMP WITH 8.5 TO 16 VOLT WORKING VOLTAGE.

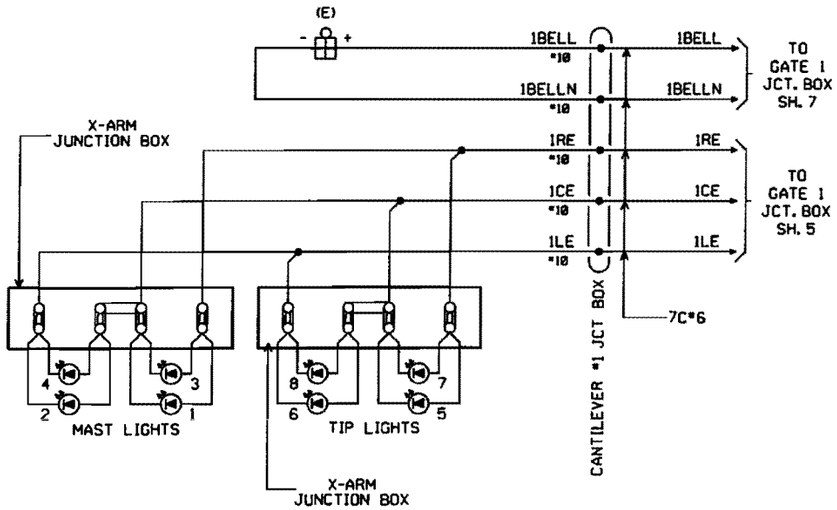

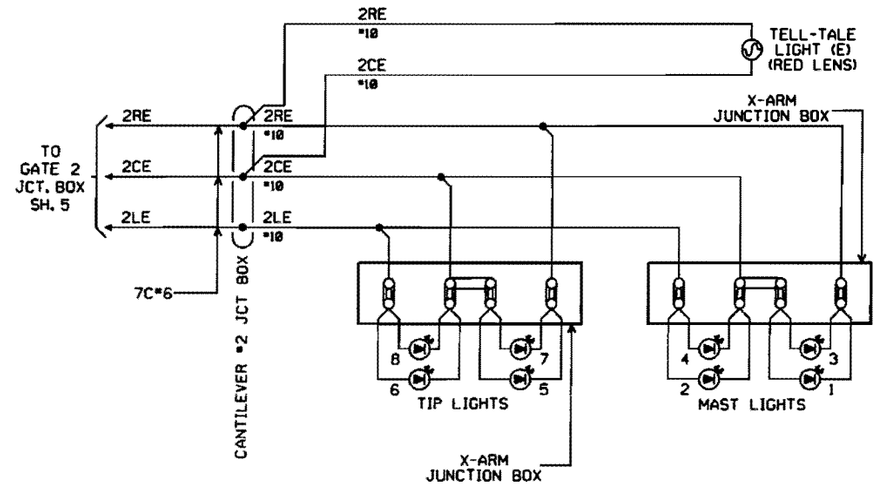

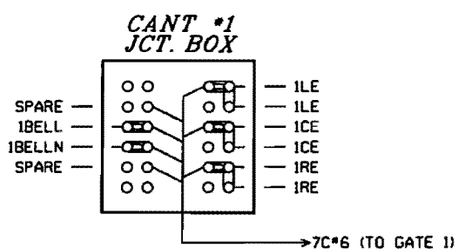

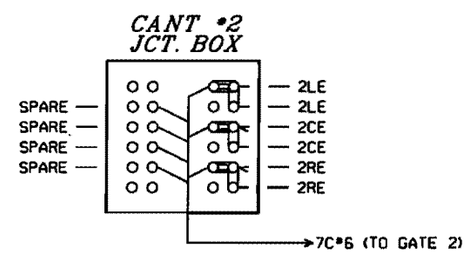

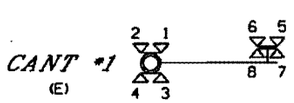

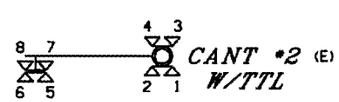

REVISIONS

THE OPERATION OF THE CIRCUITS AND EQUIPMENT REPRESENTED HEREIN CANNOT BE FULLY CHECKED UNTIL ALL CIRCUITS AND DEVICES ARE CONNECTED TO FORM A COMPLETE SYSTEM, OR AN EFFECTIVE SUBSYSTEM. SUCH SYSTEM OR SUBSYSTEM MUST BE GIVEN COMPLETE CIRCUIT AND OPERATIONAL TESTS BEFORE BEING PLACED IN REGULAR OPERATION.

Balfour Beatty Rail, Inc.

IOWA INTERSTATE RR

DRAWN: NAG
DESIGNED: D.M.R.
CHECKED: A.P.D.
DATE: 04-30-09

CROSSING LAMP CIRCUITS
US 6/34 (RT. 613)
SHEFFIELD, ILLINOIS
DOT# 863 568U MILEPOST #136.34

DRAWING NO. 812326-100
SHEET 6 OF 13

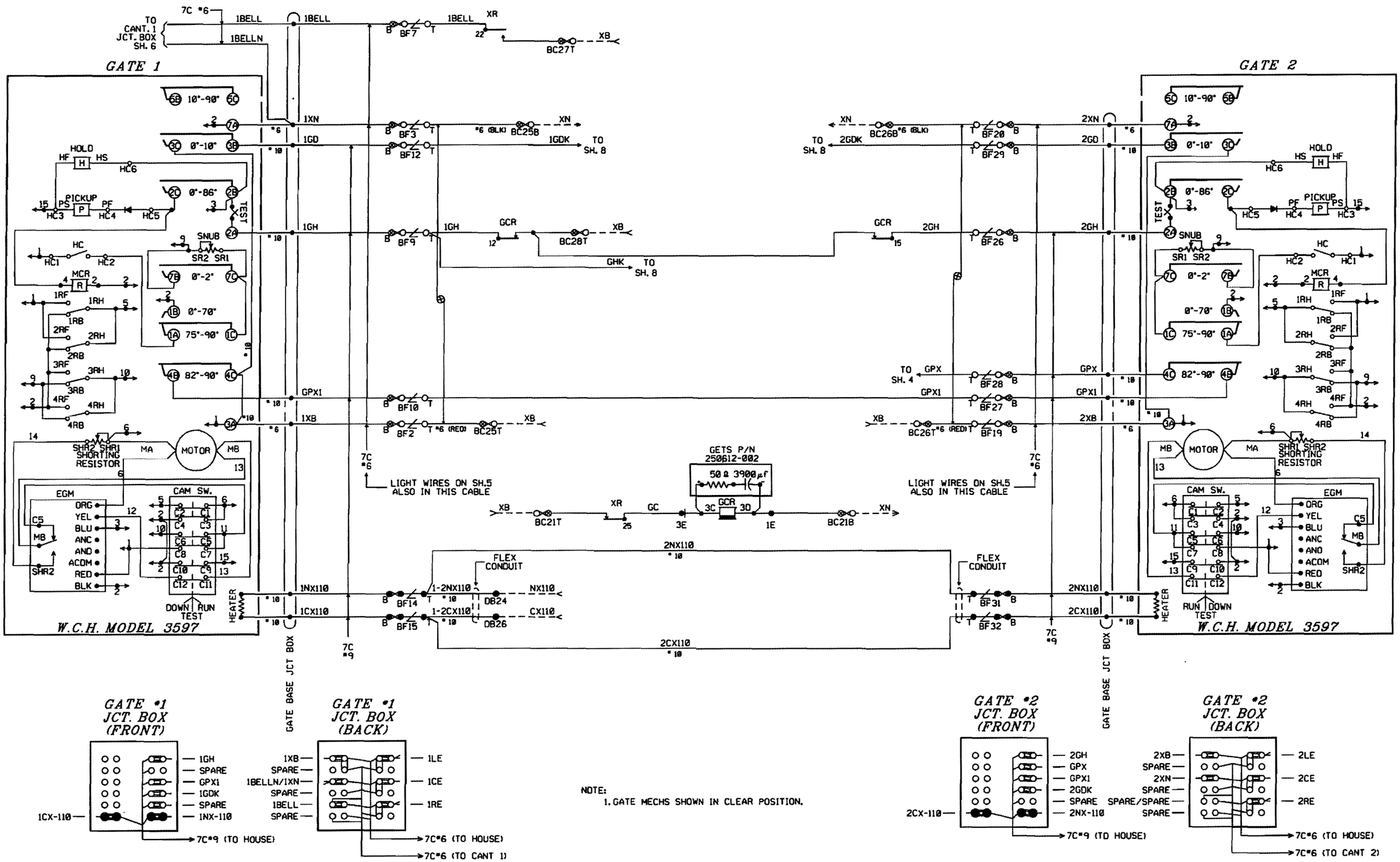

NOTE:
1. GATE MECHS SHOWN IN CLEAR POSITION.

REVISIONS

THE OPERATION OF THE CIRCUITS AND EQUIPMENT REPRESENTED HEREIN CANNOT BE FULLY CHECKED UNTIL ALL CIRCUITS AND DEVICES ARE CONNECTED TO FORM A COMPLETE SYSTEM, OR AN EFFECTIVE SUBSYSTEM. SUCH SYSTEM OR SUBSYSTEM MUST BE GIVEN COMPLETE CIRCUIT AND OPERATIONAL TESTS BEFORE BEING PLACED IN REGULAR OPERATION.

Balfour Beatty Rail, Inc.

IOWA INTERSTATE RR

DRAWN: NAG
DESIGNED: D.M.R.
CHECKED: A.P.D.
DATE: 04-30-09

GATE MECHANISMS
US 6/34 (RT. 613)
SHEFFIELD, ILLINOIS
DOT# 863 568U MILEPOST #136.34

DRAWING NO. 812326-100
SHEET 7 OF 13

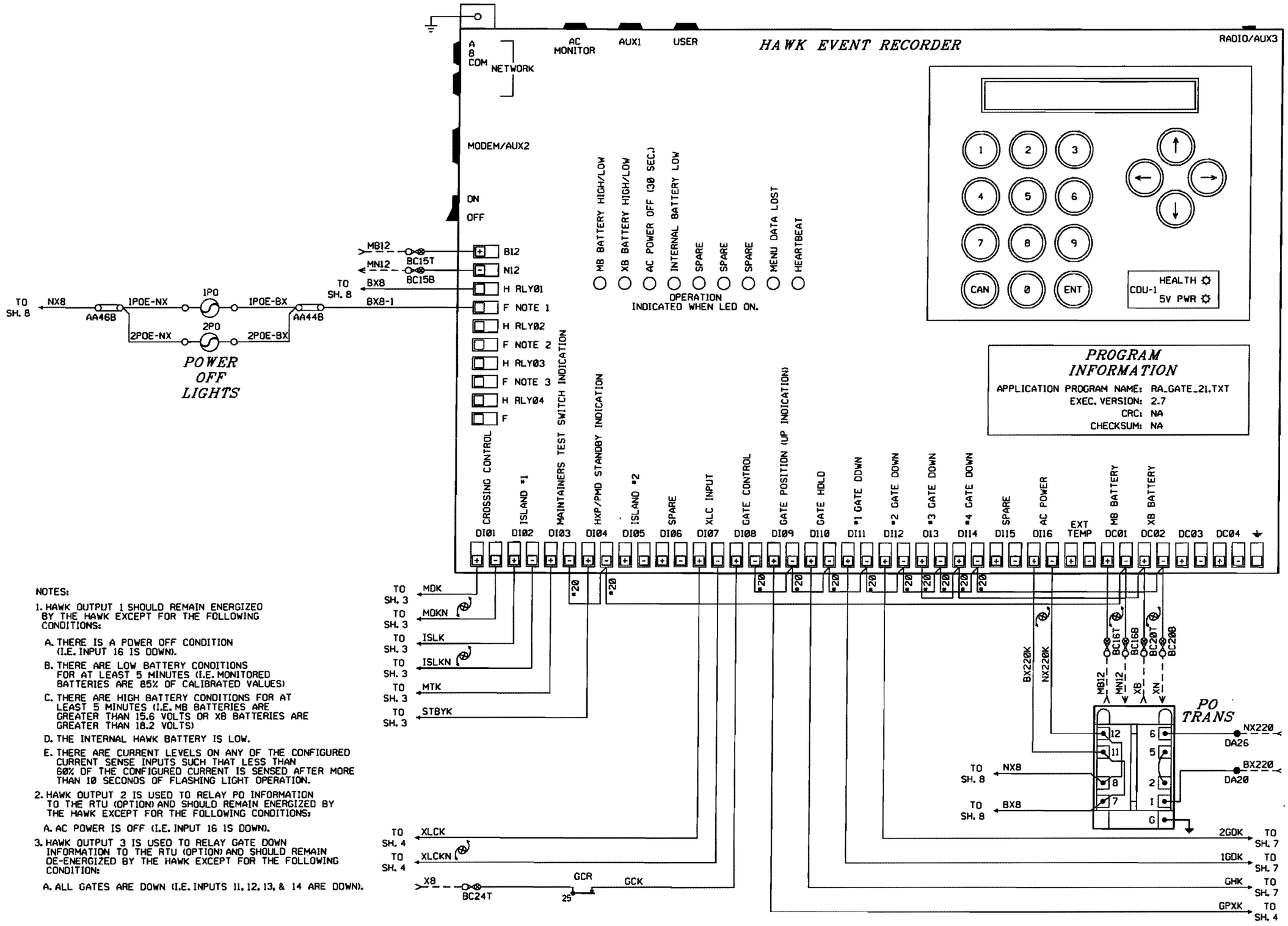

NOTES:

1. HAWK OUTPUT 1 SHOULD REMAIN ENERGIZED BY THE HAWK EXCEPT FOR THE FOLLOWING CONDITIONS:
   - A. THERE IS A POWER OFF CONDITION (I.E. INPUT 16 IS DOWN).
   - B. THERE ARE LOW BATTERY CONDITIONS FOR AT LEAST 5 MINUTES (I.E. MONITORED BATTERIES ARE 85% OF CALIBRATED VALUES)
   - C. THERE ARE HIGH BATTERY CONDITIONS FOR AT LEAST 5 MINUTES (I.E. MB BATTERIES ARE GREATER THAN 15.6 VOLTS OR XB BATTERIES ARE GREATER THAN 18.2 VOLTS)
   - D. THE INTERNAL HAWK BATTERY IS LOW.
   - E. THERE ARE CURRENT LEVELS ON ANY OF THE CONFIGURED CURRENT SENSE INPUTS SUCH THAT LESS THAN 60% OF THE CONFIGURED CURRENT IS SENSED AFTER MORE THAN 10 SECONDS OF FLASHING LIGHT OPERATION.
2. HAWK OUTPUT 2 IS USED TO RELAY PO INFORMATION TO THE RTU (OPTION) AND SHOULD REMAIN ENERGIZED BY THE HAWK EXCEPT FOR THE FOLLOWING CONDITIONS:
   - A. AC POWER IS OFF (I.E. INPUT 16 IS DOWN).
3. HAWK OUTPUT 3 IS USED TO RELAY GATE DOWN INFORMATION TO THE RTU (OPTION) AND SHOULD REMAIN DE-ENERGIZED BY THE HAWK EXCEPT FOR THE FOLLOWING CONDITION:
   - A. ALL GATES ARE DOWN (I.E. INPUTS 11, 12, 13, & 14 ARE DOWN).

REVISIONS

THE OPERATION OF THE CIRCUITS AND EQUIPMENT REPRESENTED HEREIN CANNOT BE FULLY CHECKED UNTIL ALL CIRCUITS AND DEVICES ARE CONNECTED TO FORM A COMPLETE SYSTEM, OR AN EFFECTIVE SUBSYSTEM. SUCH SYSTEM OR SUBSYSTEM MUST BE GIVEN COMPLETE CIRCUIT AND OPERATIONAL TESTS BEFORE BEING PLACED IN REGULAR OPERATION.

Balfour Beatty Rail, Inc.

IOWA INTERSTATE RR

DRAWN: NAG
DESIGNED: D.M.R.
CHECKED: A.P.D.
DATE: 04-30-09

RECORDER CIRCUITS
US 6/34 (RT. 613)
SHEFFIELD, ILLINOIS
DOT# 863 568U MILEPOST #136.34

DRAWING NO.
812326-100
SHEET 8 OF 13

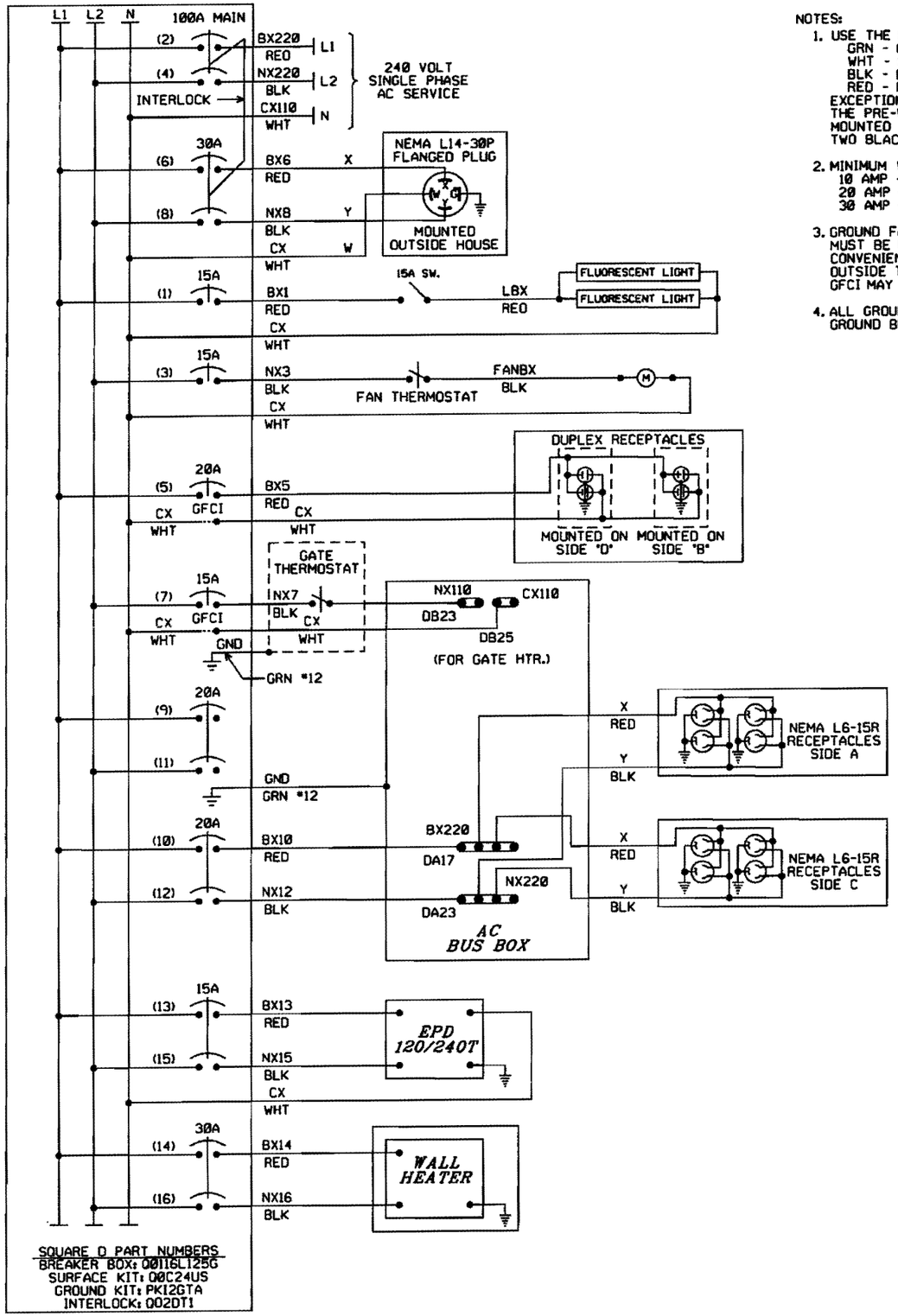

SQUARE D PART NUMBERS
BREAKER BOX: 00116L125G
SURFACE KIT: 00C24US
GROUND KIT: PKI2GTA
INTERLOCK: 002DT1

NOTES:

1. USE THE FOLLOWING COLOR CODE:
   GRN - GREEN - SAFETY EQUIPMENT GROUND
   WHT - WHITE - CX110 (NEUTRAL)
   BLK - BLACK - NX220 (L2)
   RED - RED - BX220 (L1)
   EXCEPTIONS TO THE ABOVE COLOR CODE ARE THE PRE-WIRED, SEALED ARRESTOR UNITS MOUNTED ON THE BREAKER BOX WHICH HAVE TWO BLACK AND ONE WHITE WIRE EACH.
2. MINIMUM WIRE SIZE
   10 AMP - NO. 14 AWG THHN OR THWN SOLID
   20 AMP - NO. 12 AWG THHN OR THWN SOLID
   30 AMP - NO. 10 AWG THHN OR THWN SOLID
3. GROUND FAULT INTERRUPT (GFCI) MUST BE USED ON ALL CIRCUITS SERVING CONVENIENCE OUTLETS AND ANY EQUIPMENT OUTSIDE THE BUNGALOW. RECEPTACLE MOUNTED GFCI MAY BE USED INSTEAD OF BREAKER TYPE.
4. ALL GROUND WIRES RUN TO BREAKER BOX GROUND BUS

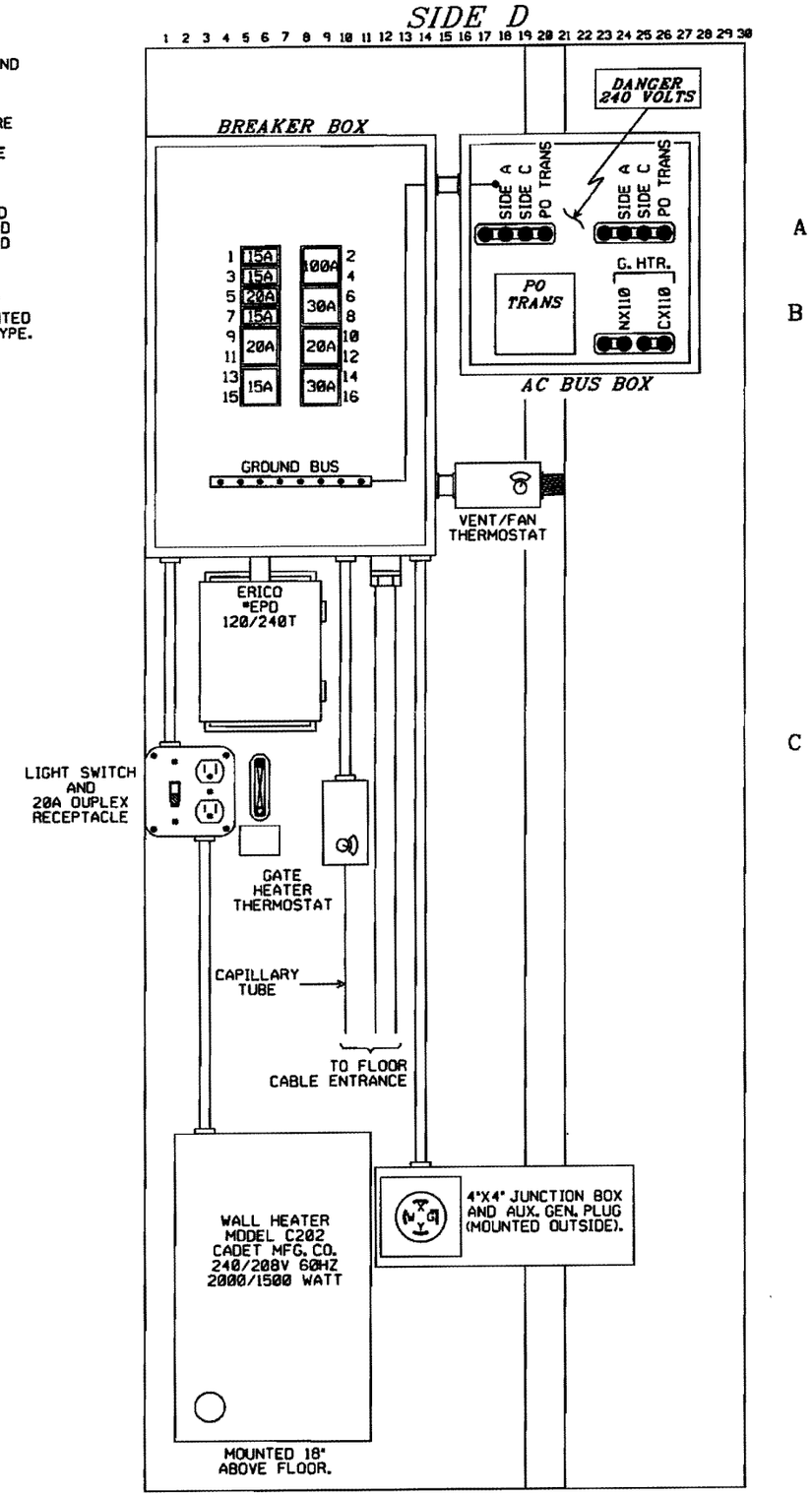

REVISIONS

THE OPERATION OF THE CIRCUITS AND EQUIPMENT REPRESENTED HEREIN CANNOT BE FULLY CHECKED UNTIL ALL CIRCUITS AND DEVICES ARE CONNECTED TO FORM A COMPLETE SYSTEM, OR AN EFFECTIVE SUBSYSTEM. SUCH SYSTEM OR SUBSYSTEM MUST BE GIVEN COMPLETE CIRCUIT AND OPERATIONAL TESTS BEFORE BEING PLACED IN REGULAR OPERATION.

Balfour Beatty Rail, Inc.

IOWA INTERSTATE RR

DRAWN: NAG DESIGNED: O.M.R. CHECKED: A.P.D. DATE: 04-30-09	AC POWER DISTRIBUTION US 6/34 (RT. 613) SHEFFIELD, ILLINOIS DOT# 863 568U MILEPOST #136.34	DRAWING NO. 812326-100 SHEET 9 OF 13

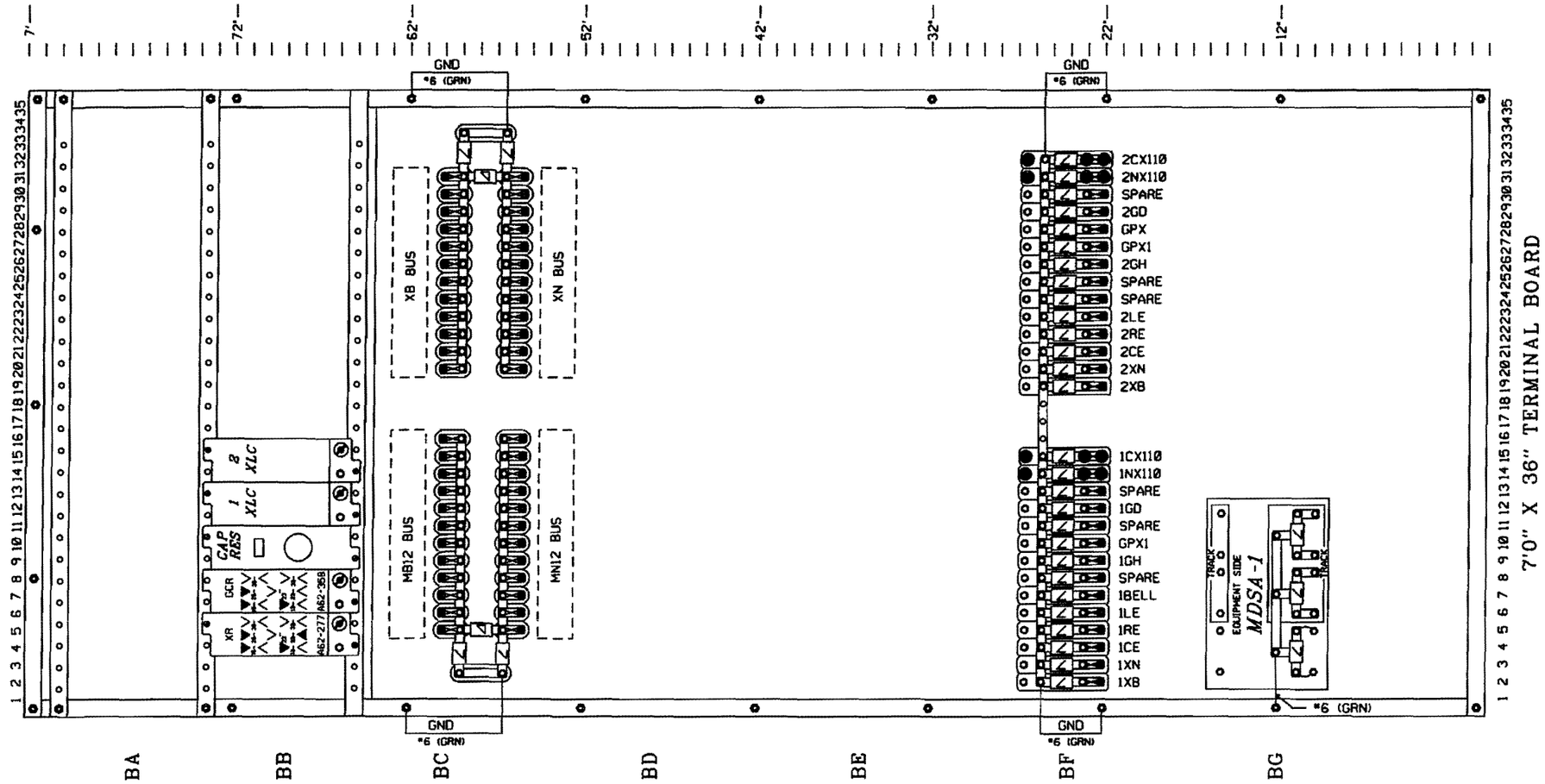

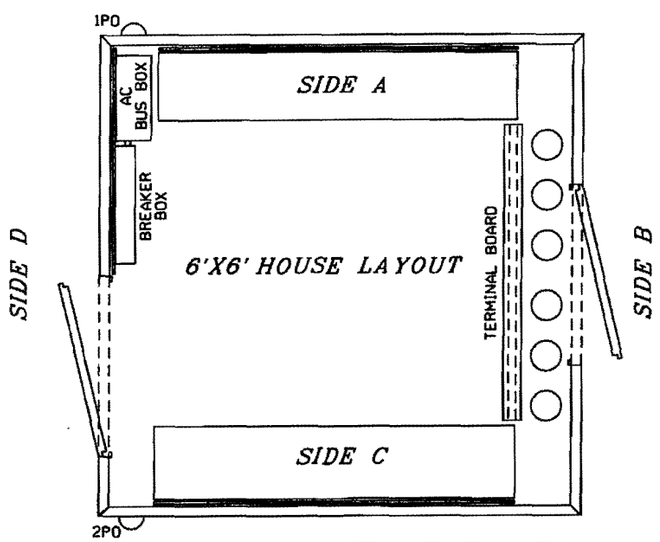

BATTERY BUS DETAILS

MB12 BUS (TOP)	BC	MN12 BUS (BOTTOM)
HAWK DC01(+)	16	HAWK DC01 (-)
HAWK B12	15	HAWK N12
MOSA-1 BATT(+)	14	MOSA-1 BATT(-)
	13	
	12	
	11	
2XLC 26	10	2XLC 25
1XLC 26	9	1XLC 25
XR 13	8	XR 16
	7	
	6	
MB BATT(+)	5	MB BATT(-)

XB BUS (TOP)	BC	XN BUS (BOTTOM)
XB BATT+	31	XB BATT-
1XLC 24	30	1XLC 14
2XLC 24	29	2XLC 14
GCR 13	28	
XR 21	27	
BF19T	26	BF20T
BF2T	25	BF3T
GCR 25	24	
BF21T	23	
BF4T	22	
XR 26	21	GCR 1E
HAWK DC02 (+)	20	HAWK DC02 (-)

REVISIONS

THE OPERATION OF THE CIRCUITS AND EQUIPMENT REPRESENTED HEREIN CANNOT BE FULLY CHECKED UNTIL ALL CIRCUITS AND DEVICES ARE CONNECTED TO FORM A COMPLETE SYSTEM, OR AN EFFECTIVE SUBSYSTEM. SUCH SYSTEM OR SUBSYSTEM MUST BE GIVEN COMPLETE CIRCUIT AND OPERATIONAL TESTS BEFORE BEING PLACED IN REGULAR OPERATION.

Balfour Beatty Rail, Inc.

IOWA INTERSTATE RR

DRAWN: NAG
DESIGNED: D.M.R.
CHECKED: A.P.D.
DATE: 04-30-09

TERMINAL BOARD
US 6/34 (RT. 613)
SHEFFIELD, ILLINOIS
DOT# 863 568U MILEPOST #136.34

DRAWING NO. 812326-100
SHEET 10 OF 13

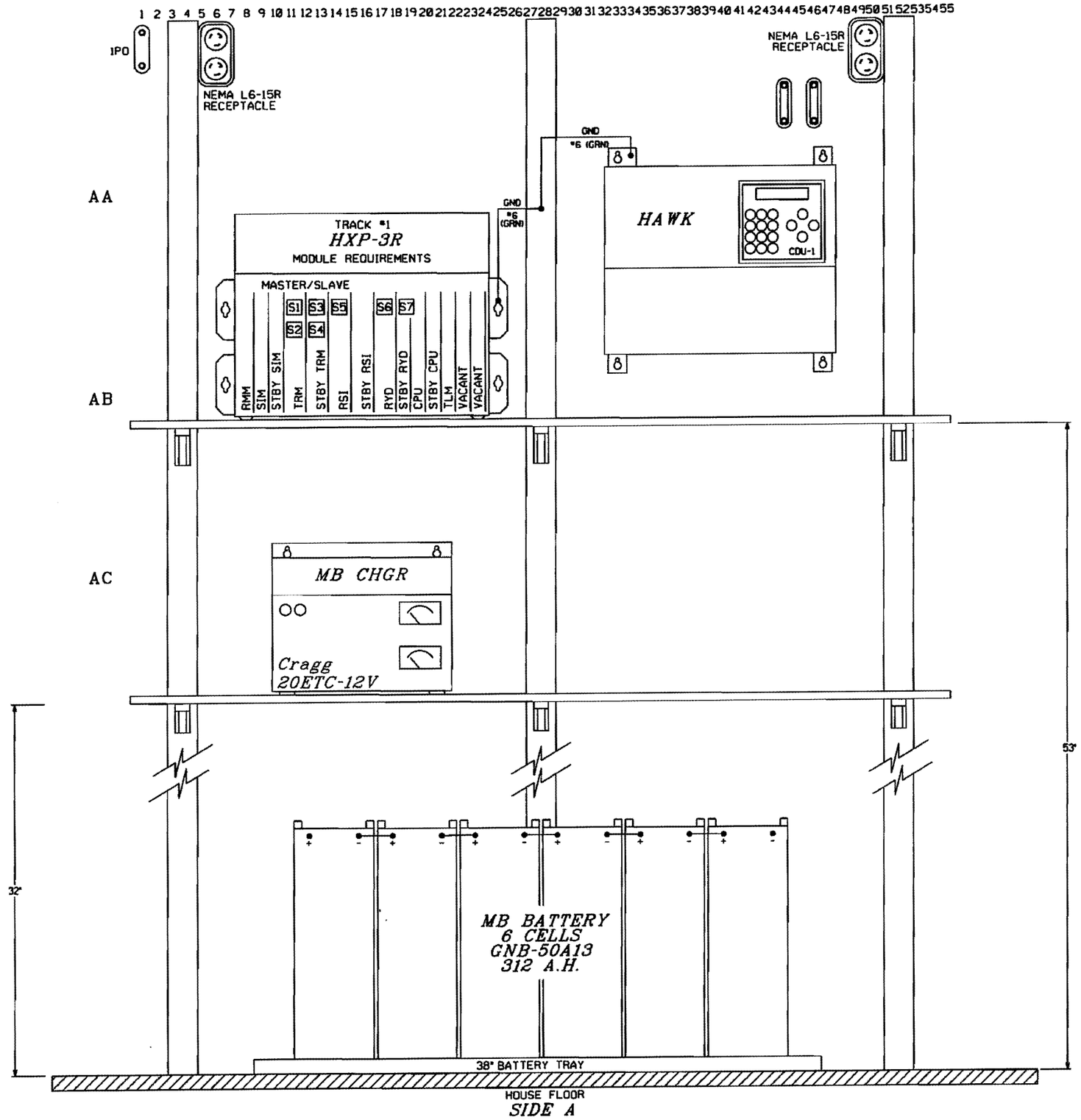

REVISIONS

THE OPERATION OF THE CIRCUITS AND EQUIPMENT REPRESENTED HEREIN CANNOT BE FULLY CHECKED UNTIL ALL CIRCUITS AND DEVICES ARE CONNECTED TO FORM A COMPLETE SYSTEM, OR AN EFFECTIVE SUBSYSTEM. SUCH SYSTEM OR SUBSYSTEM MUST BE GIVEN COMPLETE CIRCUIT AND OPERATIONAL TESTS BEFORE BEING PLACED IN REGULAR OPERATION.

Balfour Beatty Rail, Inc.

IOWA INTERSTATE RR

DRAWN: NAG DESIGNED: D.M.R. CHECKED: A.P.D. DATE: 04-30-09	SIDE A LAYOUT US 6/34 (RT. 613) SHEFFIELD, ILLINOIS DOT# 863 568U MILEPOST #136.34	DRAWING NO. 812326-100 SHEET 11 OF 13

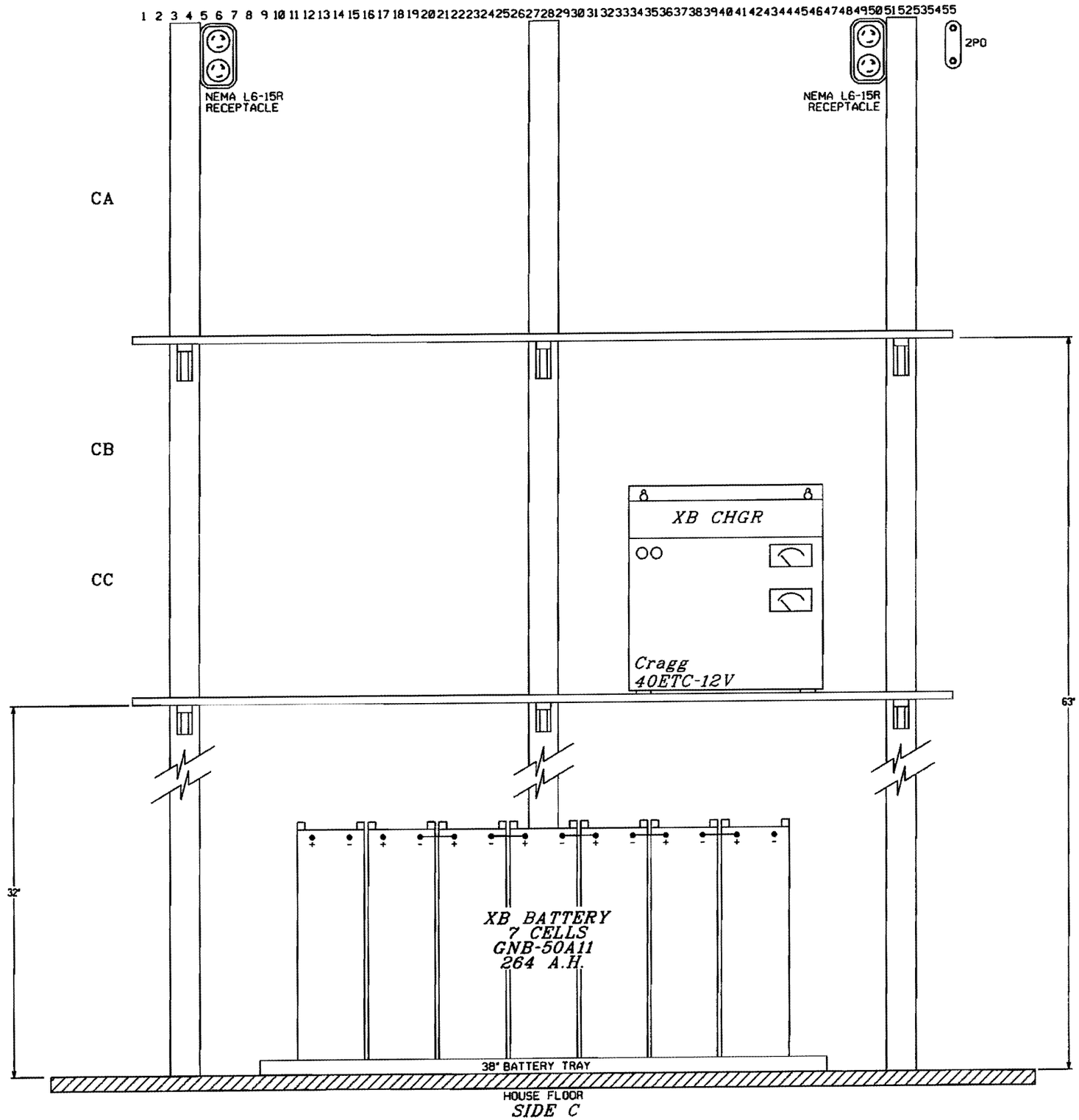

REVISIONS

THE OPERATION OF THE CIRCUITS AND EQUIPMENT REPRESENTED HEREIN CANNOT BE FULLY CHECKED UNTIL ALL CIRCUITS AND DEVICES ARE CONNECTED TO FORM A COMPLETE SYSTEM, OR AN EFFECTIVE SUBSYSTEM. SUCH SYSTEM OR SUBSYSTEM MUST BE GIVEN COMPLETE CIRCUIT AND OPERATIONAL TESTS BEFORE BEING PLACED IN REGULAR OPERATION.

Balfour Beatty Rail, Inc.

IOWA INTERSTATE RR

DRAWN: NAG
DESIGNED: D.M.R.
CHECKED: A.P.D.
DATE: 04-30-09

SIDE C LAYOUT
US 6/34 (RT. 613)
SHEFFIELD, ILLINOIS
DOT# 863 568U MILEPOST #136.34

DRAWING NO.
812326-100
SHEET 12 OF 13

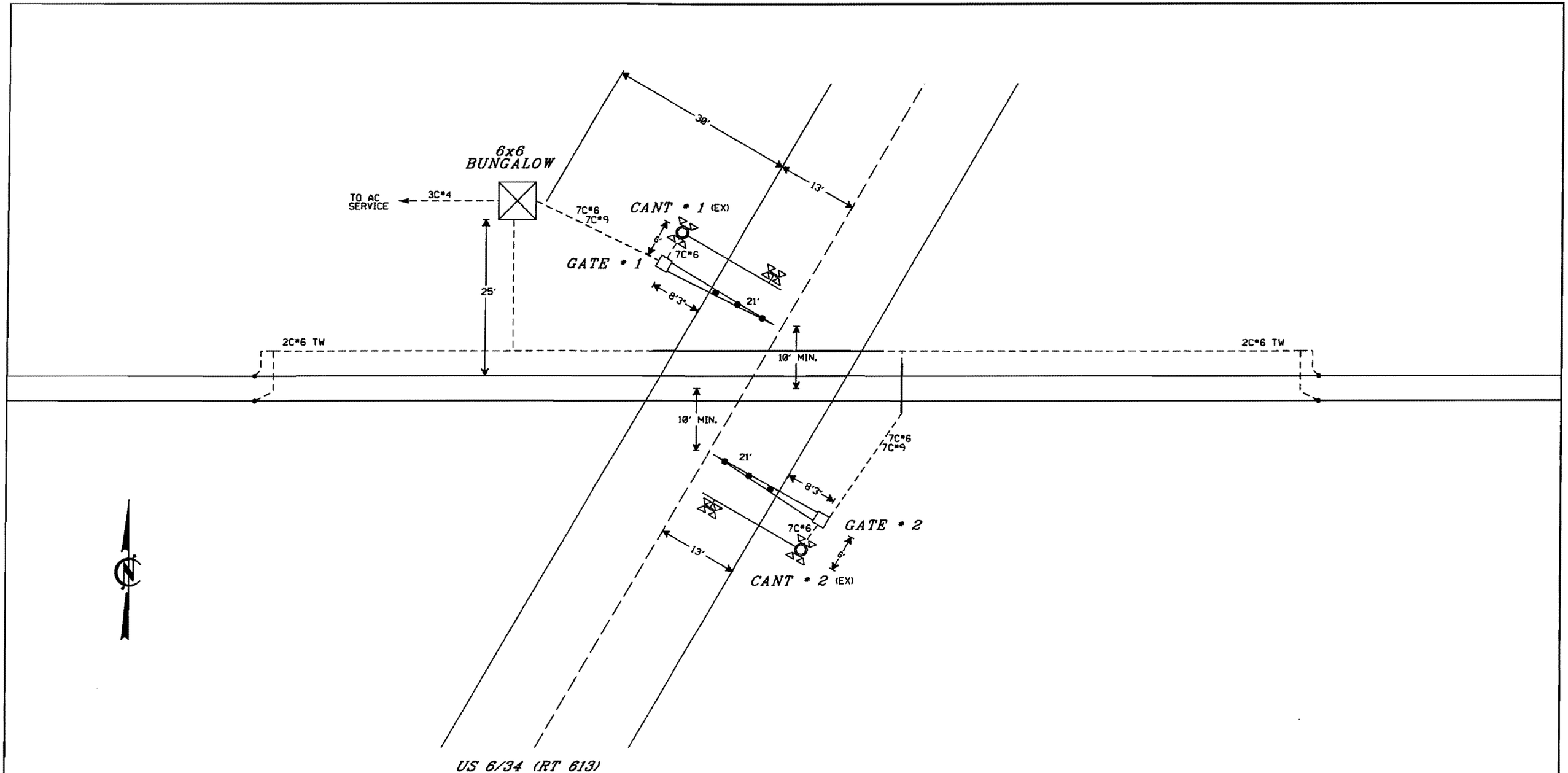

LEGEND:

——— - RIGID CONDUIT

- - - - - - - UNDERGROUND CABLE

REVISIONS

THE OPERATION OF THE CIRCUITS AND EQUIPMENT REPRESENTED HEREIN CANNOT BE FULLY CHECKED UNTIL ALL CIRCUITS AND DEVICES ARE CONNECTED TO FORM A COMPLETE SYSTEM, OR AN EFFECTIVE SUBSYSTEM. SUCH SYSTEM OR SUBSYSTEM MUST BE GIVEN COMPLETE CIRCUIT AND OPERATIONAL TESTS BEFORE BEING PLACED IN REGULAR OPERATION.

Balfour Beatty
Rail, Inc.

IOWA INTERSTATE RR

DRAWN: NAG
DESIGNED: O.M.R.
CHECKED: A.P.D.
DATE: 04-30-09

CABLE & FOUNDATION PLAN
US 6/34 (RT. 613)
SHEFFIELD, ILLINOIS
OOT# 863 568U MILEPOST #136.34

DRAWING NO.
812326-100
SHEET 13 OF 13