PLAN

1. North Arrow
2. Alignment of centerline of bridge and/or horizontal control line of project, centerline of existing track(s), centerline or future track(s), centerline of shoofly, centerline of roadway. Identify tracks as main, siding, etc.
3. Angle between centerline of roadway and centerline of bridge. Skew angle of substructure.
4. Horizontal distance between centerlines of main track(s) and adjacent existing and/or future tracks.
5. Individual span length(s) and total bridge length from face to face of backwalls.
6. Limits of Railroad right-of-way with respect to centerline of main track. Limits of Right-of-Way fencing.
7. Footprint of proposed superstructure and substructure including approach slabs and existing structure, if applicable.
8. Footprint of roadway, sidewalks, retaining walls, etc.
9. Location of access roadway(s) and turnarounds.
10. Timetable direction arrows, nearest railroad station and end station of railroad subdivision.
11. Railroad Milepost measured at the inside face of backwall, at the low milepost bridge end.
12. Point of minimum vertical clearance.
13. All existing facilities and utilities and their proposed relocation, if required.
14. Limits of shoring including minimum distance at right angle from centerline of nearest track.
15. Limits of grading, with existing and proposed contours.
16. Minimum structure separation for adjacent structures.
17. Direction of flow for all drainage systems within project limits.
18. Location of geotech borings.

ELEVATION

1. Individual span length(s) and total bridge length from inside face to face of backwalls.
2. Distance from nearest Railroad Milemarker to inside face of backwall at the low milepost bridge end.
3. Profile grade of bridge.
4. Profile grade and top of rail elevations for main track.
5. Roadway section.
6. Minimum vertical clearance from roadway to bridge.
7. Limits of handrail/fence on bridge.
8. Location of fixed and expansion bearings.
9. Location and type of substructure with elevations.
10. Numbering of spans, abutments and piers.
11. Existing and proposed groundline, including slope paving.
12. Existing and proposed utilities.
13. Depth of foundation below roadway.

TYPICAL SECTION

1. Centerline of bridge and/or horizontal control line of project, centerline of existing track(s), centerline of future track(s). Identify tracks as main, siding, etc.
2. AREMA clearance envelope.
3. Horizontal distance between centerline of tracks, distance from centerline of track to face of ballast retainer and handrail/fence.
4. Total width of superstructure.
5. Width of walkway.
6. Height and type of ballast retainer, handrail/fence.
7. Depth of superstructure.
8. Rail, tie and ballast system with vertical distance from top of rail to top of deck and minimum depth of ballast under the tie (12").
9. Cross slope of deck, if applicable, and waterproofing system.
10. Girder spacing.
11. Diaphragms: Steel - end and intermediate
    Concrete - tie rods.

TITLE BLOCK

1. The name & logo of engineering firm or project owner.
2. Drawing title.
3. RR Milepost number and subdivision.
4. City, county and state.
5. Project name and location.
6. Date.
7. Latitude and Longitude.

RAILROAD PROFILE GRADE DIAGRAM

1. Show existing and proposed track profile at the bridge location and a minimum of 1,000 feet past each end of the bridge.

REVISIONS		
DATE	LTR.	DESCRIPTION
/		
/		
/		
/		
/		
/		

DESIGN BY: RAF | DRAWN BY: FJS | CHECKED BY: KHJ

APPROVED:

K.H. Jennison

BNSF - ASSISTANT DIRECTOR STRUCTURES DESIGN

George J. Meyer

UPRR - MGR SPECIAL PROJECTS STRUCTURES DESIGN

BNSF RAILWAY

UNION PACIFIC

BRIDGE STANDARDS

GRADE SEPARATION GUIDELINES (UNDERPASS)

MINIMUM LAYOUT REQUIREMENTS FOR UNDERPASS STRUCTURES

FILE OWNER: UPRR | DATE: 1/24/07

PLAN NO.: 711200 | SHEET: 1

PLOTTED: 3/30/2007 2:54:47 PM

FILE NAME: P:\ustation\dgn\std\pp_guidelines.dgn

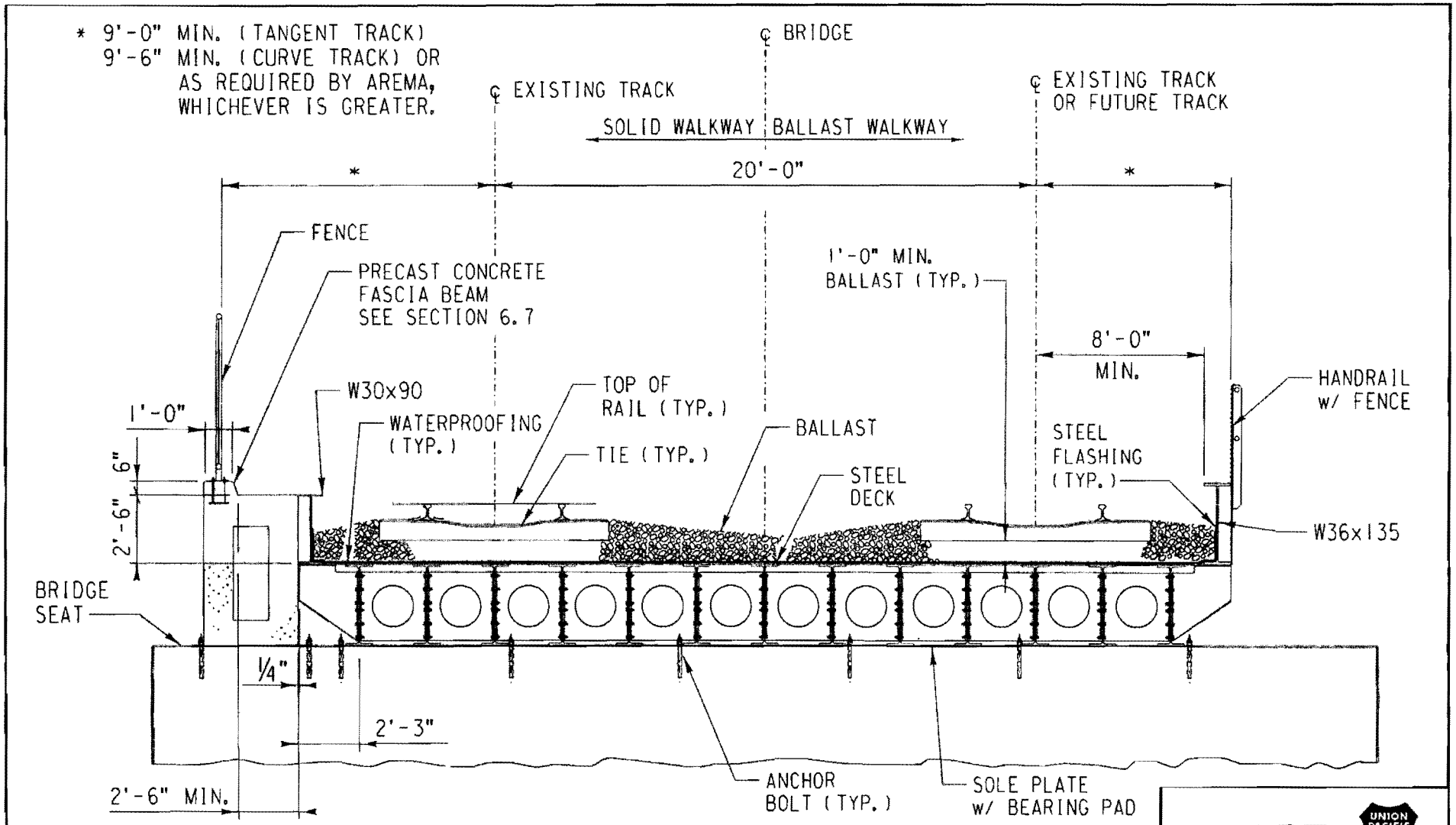

REVISIONS		
DATE	LTR.	DESCRIPTION
/		
/		
/		
/		
/		
/		

DESIGN BY: RAF | DRAWN BY: KDM | CHECKED BY: KHJ

APPROVED:

K.H. Jennison

BNSF - ASSISTANT DIRECTOR STRUCTURES DESIGN

George J. Meyer

UPRR - MGR SPECIAL PROJECTS STRUCTURES DESIGN

BNSF RAILWAY

UNION PACIFIC

BRIDGE STANDARDS

GRADE SEPARATION GUIDELINES (UNDERPASS)

ROLLED BEAMS w/ STEEL PLATE DECK

FILE OWNER: UPRR | DATE: 1/24/07

PLAN NO.: 711200 | SHEET: 2

PLOTTED: 4/11/2007 9:15:45 AM

FILE NAME: P:\ustation\dgn\std\pp_guidelines.dgn

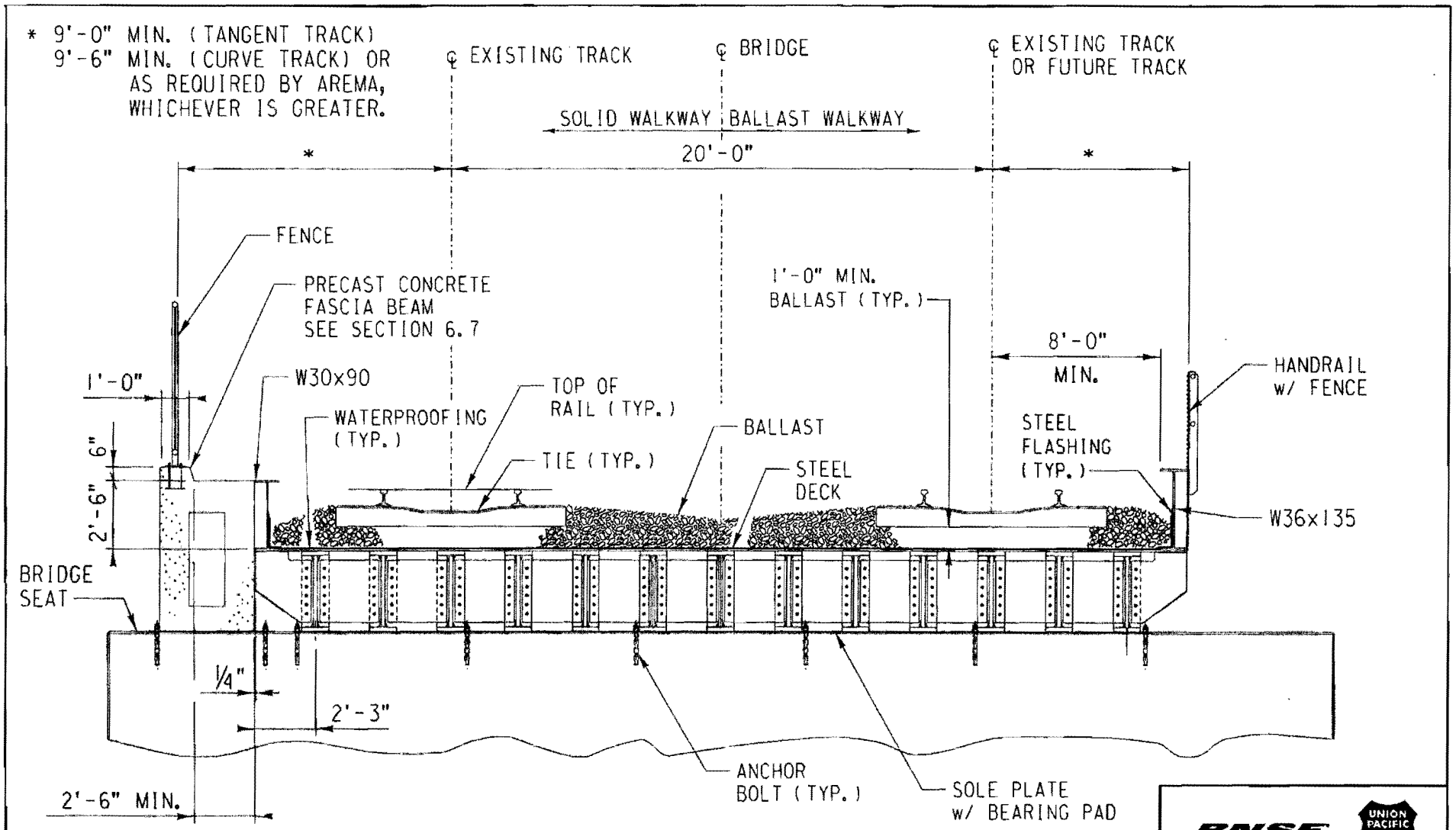

REVISIONS		
DATE	LTR.	DESCRIPTION
/		
/		
/		
/		
/		
/		

DESIGN BY: RAF | DRAWN BY: KDM | CHECKED BY: KHJ

APPROVED:

K.H. Jennison

BNSF - ASSISTANT DIRECTOR STRUCTURES DESIGN

George J. Meyn

UPRR - MGR SPECIAL PROJECTS STRUCTURES DESIGN

BNSF RAILWAY

UNION PACIFIC

BRIDGE STANDARDS

GRADE SEPARATION GUIDELINES (UNDERPASS)

STEEL PLATE GIRDERS w/ STEEL PLATE DECK

FILE OWNER: UPRR | DATE: 1/24/07

PLAN NO.: 711200 | SHEET: 3

PLOTTED: 4/11/2007 9:16:12 AM

FILE NAME: P:\ustation\dgn\std\pp_guidelines.dgn

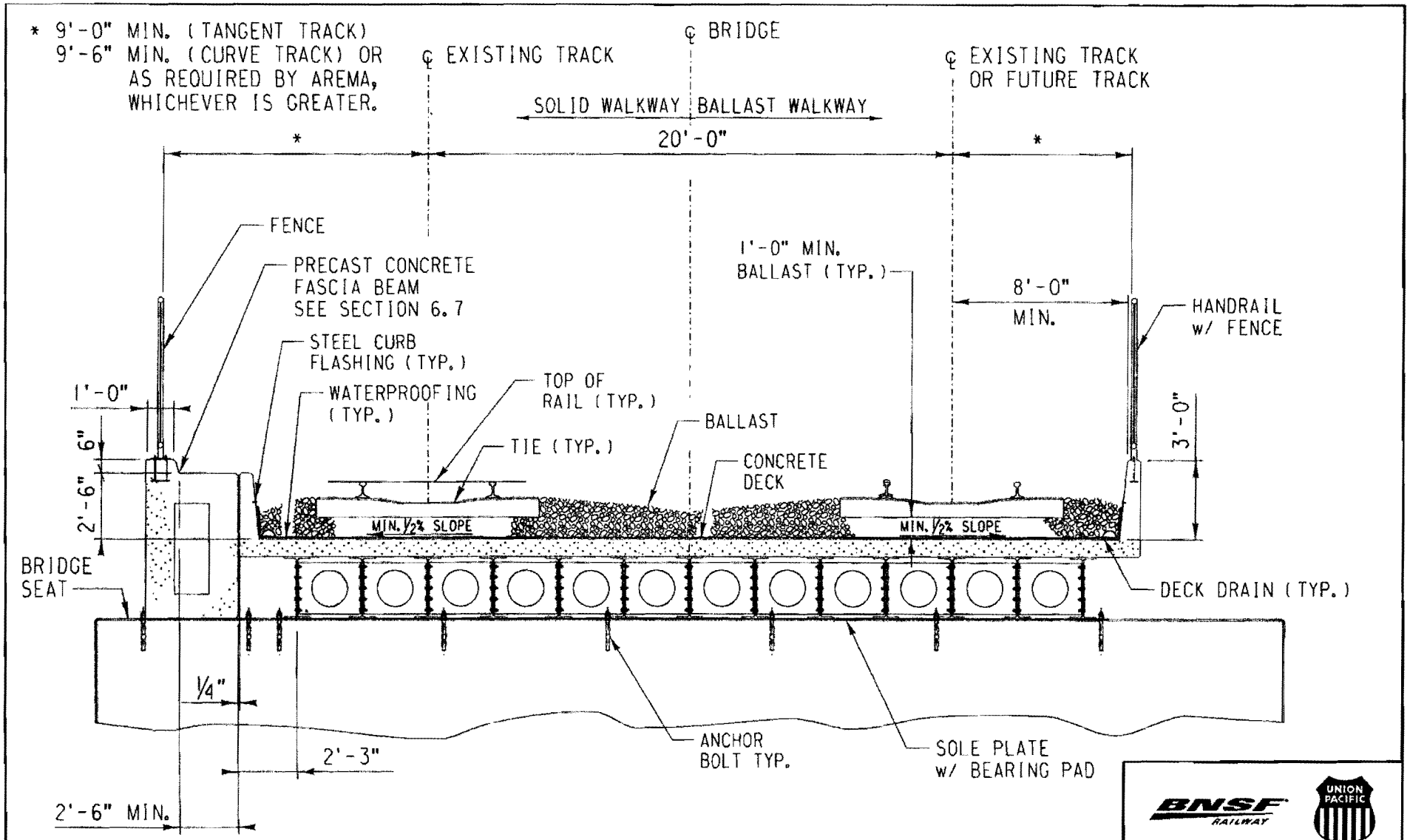

REVISIONS		
DATE	LTR.	DESCRIPTION
/		
/		
/		
/		
/		
/		

DESIGN BY: RAF | DRAWN BY: MMD | CHECKED BY: KHJ

APPROVED:

K.H. Jennison

BNSF - ASSISTANT DIRECTOR STRUCTURES DESIGN

George J. Meyn

UPRR - MGR SPECIAL PROJECTS STRUCTURES DESIGN

BNSF RAILWAY

UNION PACIFIC

BRIDGE STANDARDS

GRADE SEPARATION GUIDELINES (UNDERPASS)

ROLLED BEAMS w/ CONCRETE DECK

FILE OWNER: UPRR | DATE: 1/24/07

PLAN NO.: 711200 | SHEET: 4

PLOTTED: 4/11/2007 9:16:47 AM

FILE NAME: P:\ustation\dgn\std\pp_guidelines.dgn

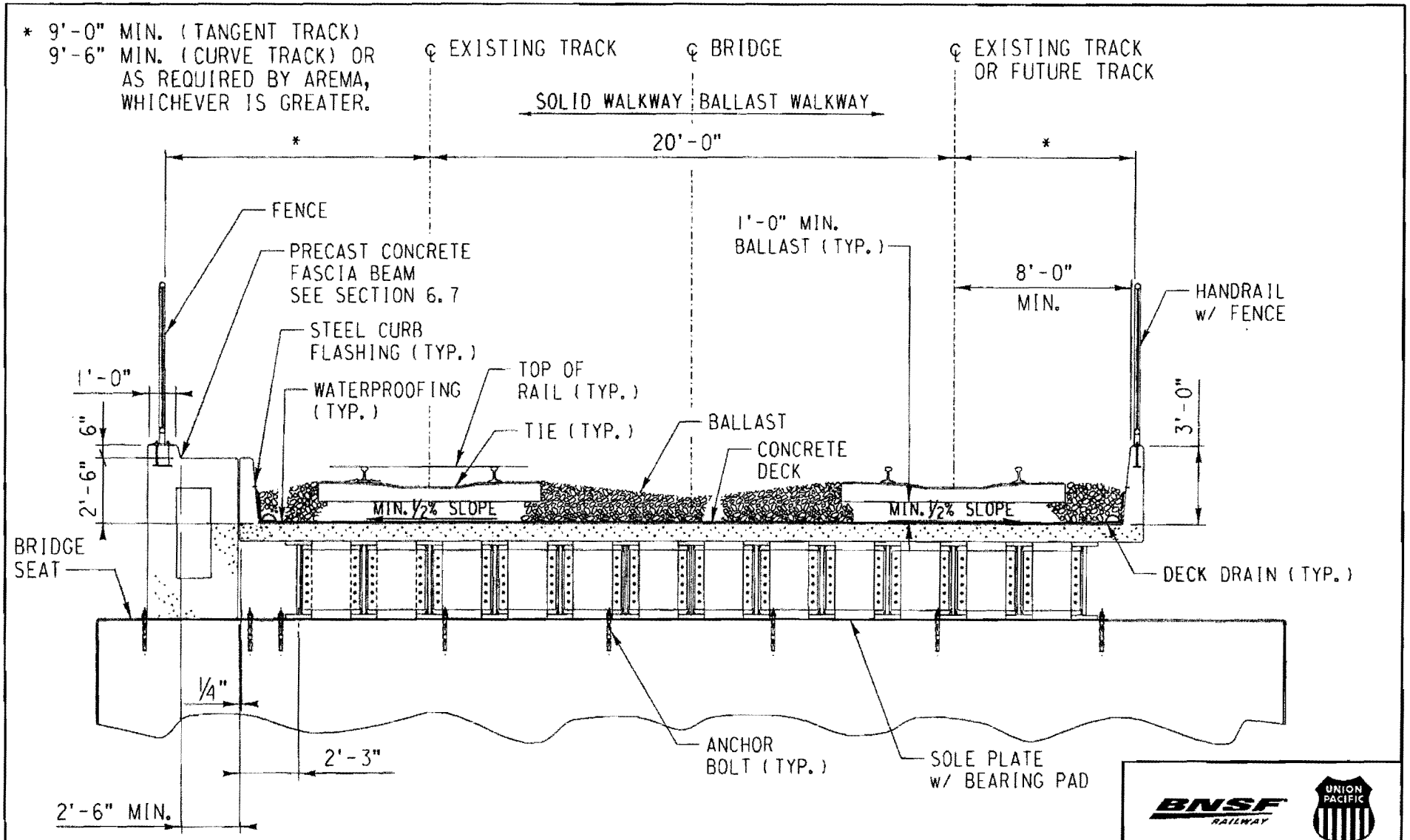

REVISIONS		
DATE	LTR.	DESCRIPTION
/		
/		
/		
/		
/		
/		

DESIGN BY: RAF | DRAWN BY: MMD | CHECKED BY: KHJ

APPROVED:

K.H. Jennison

BNSF - ASSISTANT DIRECTOR STRUCTURES DESIGN

George J. Meyer

UPRR - MGR SPECIAL PROJECTS STRUCTURES DESIGN

BNSF RAILWAY

UNION PACIFIC

BRIDGE STANDARDS

GRADE SEPARATION GUIDELINES (UNDERPASS)

STEEL PLATE GIRDERS w/ CONCRETE DECK

FILE OWNER: UPRR | DATE: 1/24/07

PLAN NO.: 711200 | SHEET: 5

PLOTTED: 4/11/2007 9:17:03 AM

FILE NAME: P:\ustation\dgn\sto\pp_guidelines.dgn

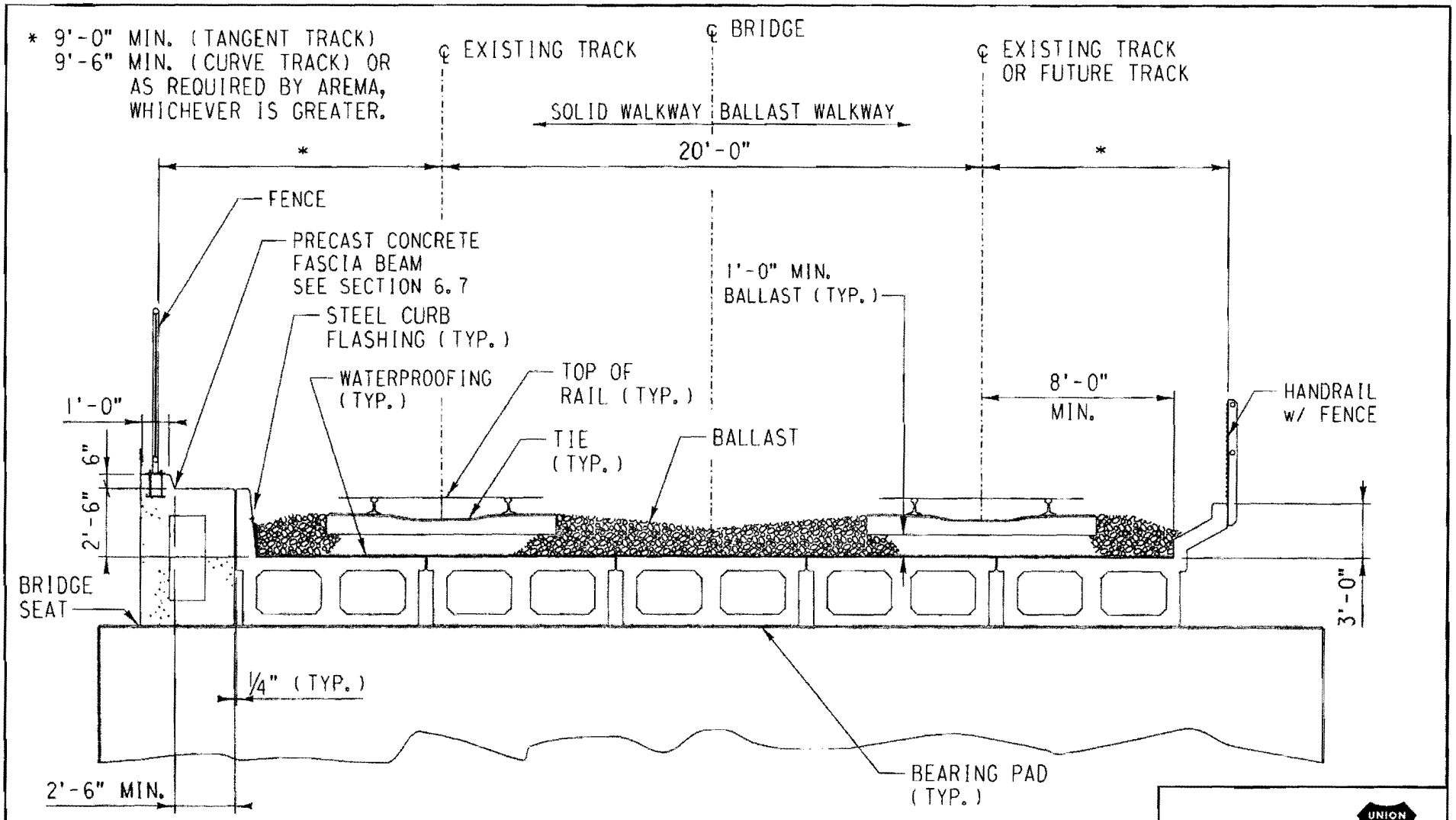

REVISIONS		
DATE	LTR.	DESCRIPTION
/		
/		
/		
/		
/		
/		

DESIGN BY: RAF | DRAWN BY: KDM | CHECKED BY: KHJ

APPROVED:

K.H. Jennison

BNSF - ASSISTANT DIRECTOR STRUCTURES DESIGN

George J. Meyn

UPRR - MGR SPECIAL PROJECTS-STRUCTURES DESIGN

BNSF RAILWAY

UNION PACIFIC

BRIDGE STANDARDS

GRADE SEPARATION GUIDELINES (UNDERPASS)

RR STANDARD PRESTRESSED PRECAST CONCRETE DOUBLE CELL BOX BEAMS

FILE OWNER: UPRR | DATE: 1/24/07

PLAN NO.: 711200 | SHEET: 6

PLOTTED: 4/11/2007 9:17:19 AM

FILE NAME: P:\ustation\dgn\std\pp_guidelines.dgn

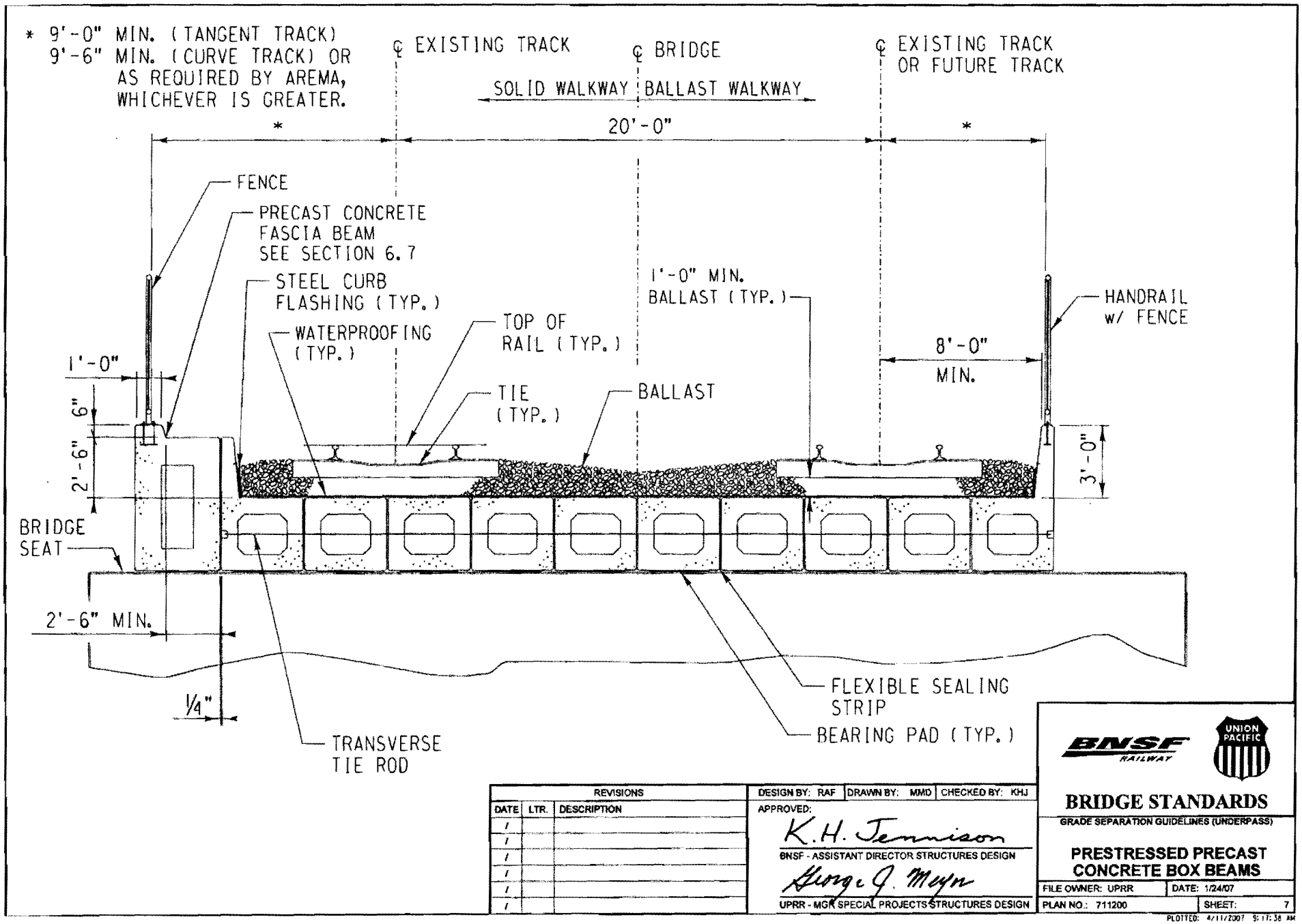

REVISIONS		
DATE	LTR.	DESCRIPTION
/		
/		
/		
/		
/		
/		

DESIGN BY: RAF | DRAWN BY: MMD | CHECKED BY: KHJ

APPROVED:

K.H. Jennison

BNSF - ASSISTANT DIRECTOR STRUCTURES DESIGN

George J. Meyer

UPRR - MGR SPECIAL PROJECTS STRUCTURES DESIGN

BNSF RAILWAY

UNION PACIFIC

BRIDGE STANDARDS

GRADE SEPARATION GUIDELINES (UNDERPASS)

PRESTRESSED PRECAST CONCRETE BOX BEAMS

FILE OWNER: UPRR | DATE: 1/24/07

PLAN NO.: 711200 | SHEET: 7

PLOTTED: 4/11/2007 9:17:38 AM

FILE NAME: P:\station\dgn\std\pp_guidelines.dgn

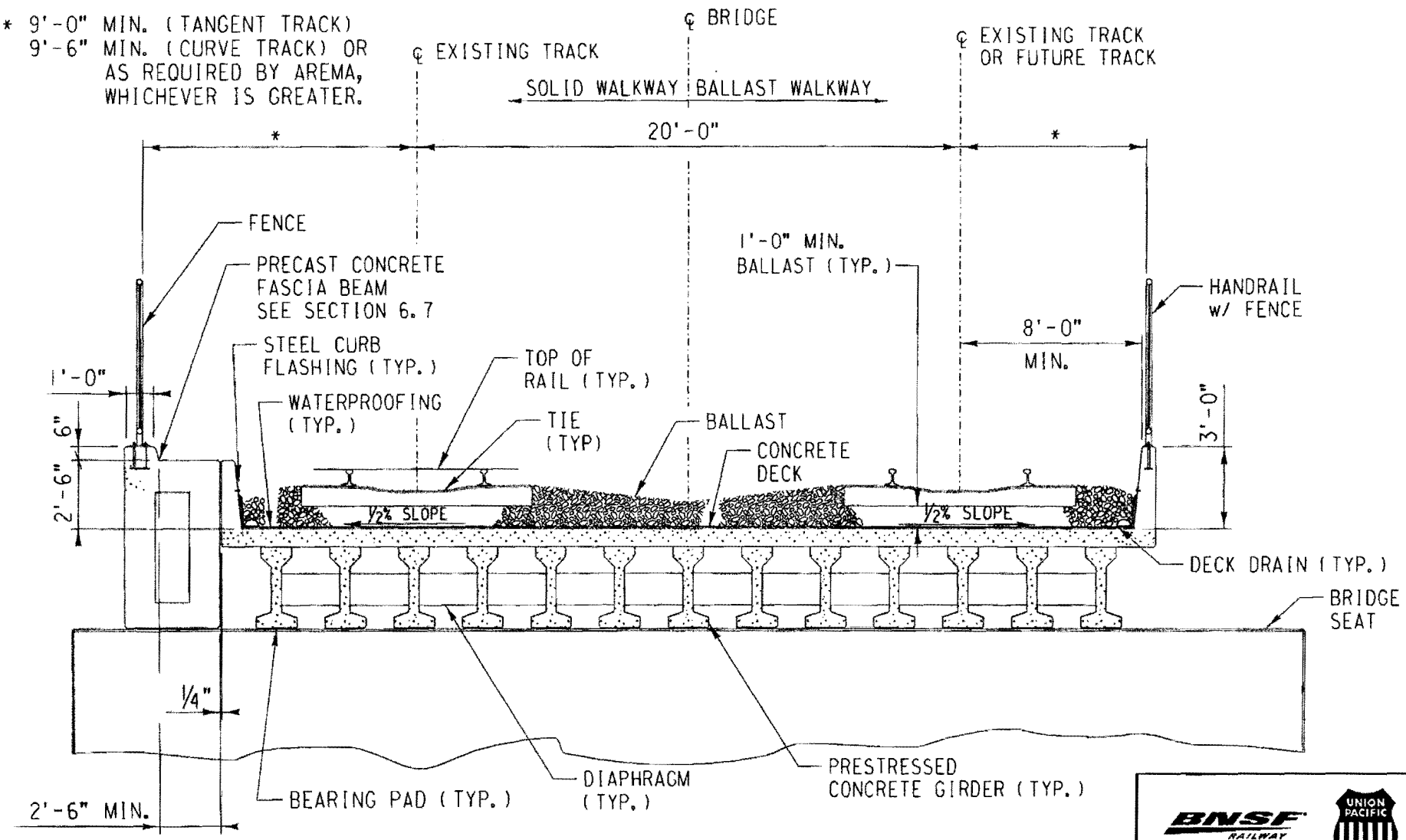

REVISIONS		
DATE	LTR.	DESCRIPTION
/		
/		
/		
/		
/		
/		

DESIGN BY: RAF | DRAWN BY: FJS | CHECKED BY: KHJ

APPROVED:

K.H. Jennison

BNSF - ASSISTANT DIRECTOR STRUCTURES DESIGN

George J. Meyer

UPRR - MGR SPECIAL PROJECTS STRUCTURES DESIGN

BNSF RAILWAY

UNION PACIFIC

BRIDGE STANDARDS

GRADE SEPARATION GUIDELINES (UNDERPASS)

PRESTRESSED PRECAST CONCRETE AASHTO TYPE GIRDER w/ CONCRETE DECK

FILE OWNER: UPRR | DATE: 1/24/07

PLAN NO.: 711200 | SHEET: 8

PLOTTED: 4/11/2007 9:17:49 AM

FILE NAME: P:\ustation\dgn\sta\pp_guidelines.dgn

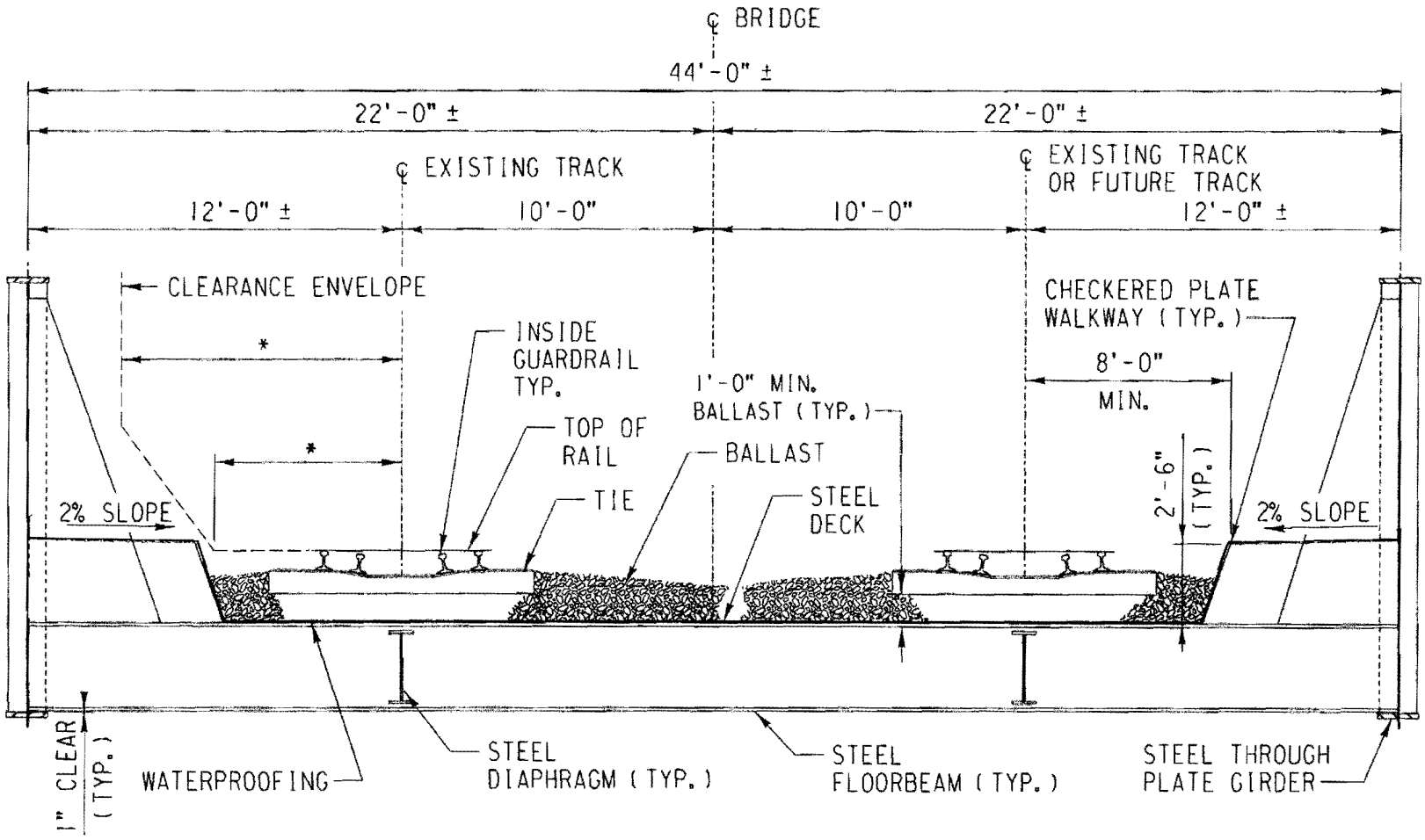

* SEE SECTION 6.6.1

REVISIONS		
DATE	LTR.	DESCRIPTION
/		
/		
/		
/		
/		
/		

DESIGN BY: RAF | DRAWN BY: KDM | CHECKED BY: KHJ

APPROVED:

K.H. Jennison

BNSF - ASSISTANT DIRECTOR STRUCTURES DESIGN

George J. Meyn

UPRR - MGR SPECIAL PROJECTS STRUCTURES DESIGN

BNSF RAILWAY

UNION PACIFIC

BRIDGE STANDARDS

GRADE SEPARATION GUIDELINES (UNDERPASS)

STEEL THROUGH PLATE GIRDERS w/ STEEL PLATE DECK

FILE OWNER: UPRR | DATE: 1/24/07

PLAN NO.: 711200 | SHEET: 9

PLOTTED: 3/30/2007 2:56:23 PM

FILE NAME: P:\station\dgn\std\pp_guidelines.dgn

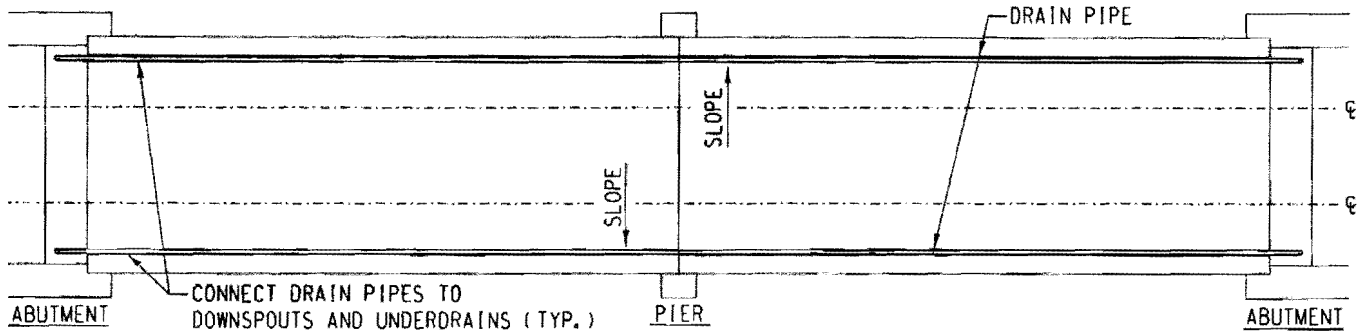

DECK PLAN

SCALE: NONE

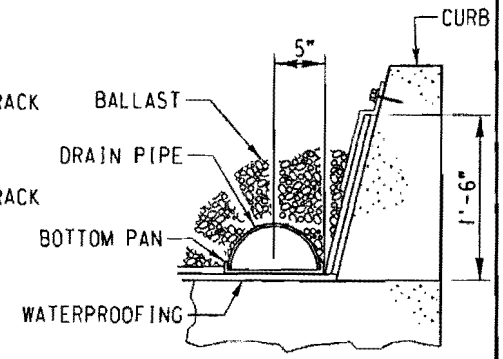

LOCATION OF DRAIN PIPE

SCALE: NONE

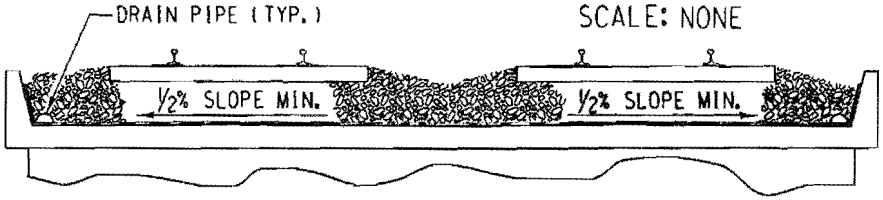

TYPICAL DECK SECTION

SCALE: NONE

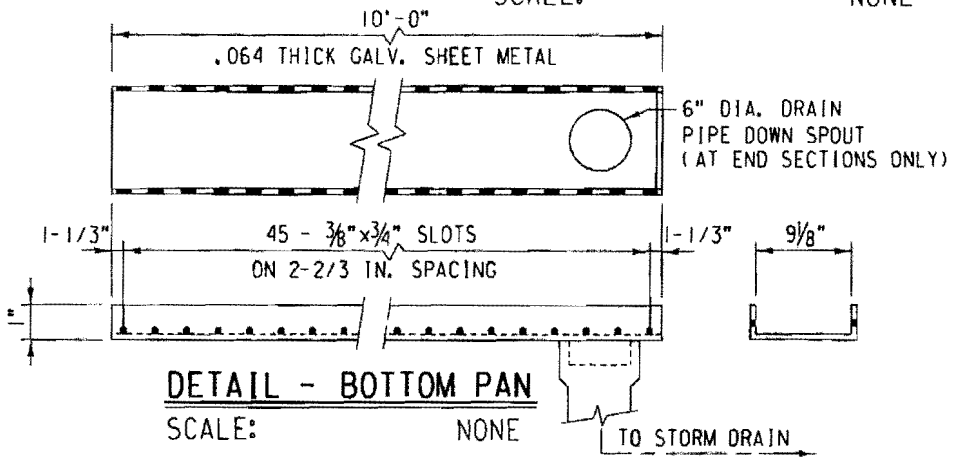

DETAIL - BOTTOM PAN

SCALE: NONE

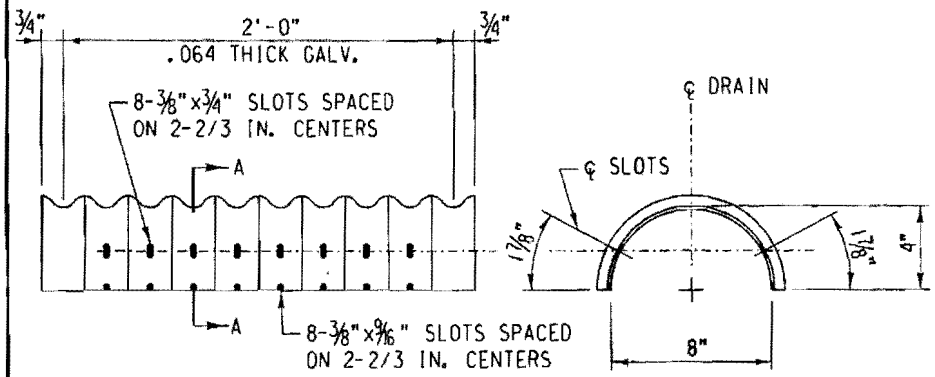

DETAIL - DRAIN PIPE

SCALE: NONE

NOTE: LAP DRAIN PIPE ONE CORRUGATION AT EACH END.

REVISIONS		
DATE	LTR.	DESCRIPTION
/		
/		
/		
/		
/		
/		

DESIGN BY: RAF | DRAWN BY: MMD | CHECKED BY: KHJ

APPROVED:

K.H. Jennison

BNSF - ASSISTANT DIRECTOR STRUCTURES DESIGN

George J. Meyn

UPRR - MGR SPECIAL PROJECTS STRUCTURES DESIGN

BNSF RAILWAY

UNION PACIFIC

BRIDGE STANDARDS

GRADE SEPARATION GUIDELINES (UNDERPASS)

CAST-IN-PLACE CONCRETE DECK DRAIN DETAILS

FILE OWNER: UPRR | DATE: 1/24/07

PLAN NO.: 711200 | SHEET: 10

PLOTTED: 3/30/2007 2:56:36 PM

FILE NAME: P:\ustation\dgn\std\pp_guidelines.dgn

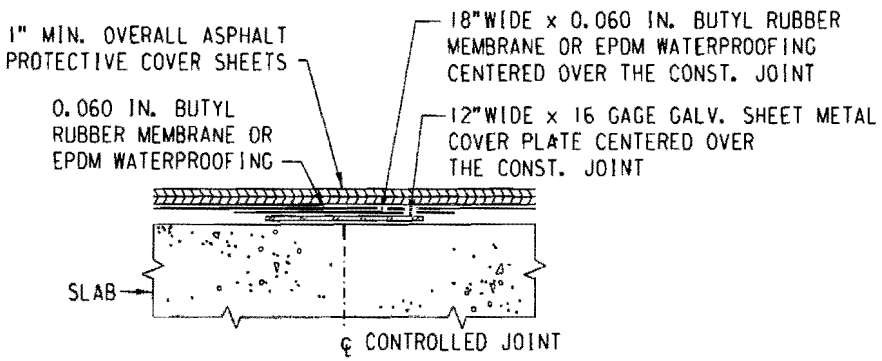

TYPICAL LONGITUDINAL SECTION AT CONTROLLED JOINT

NO SCALE

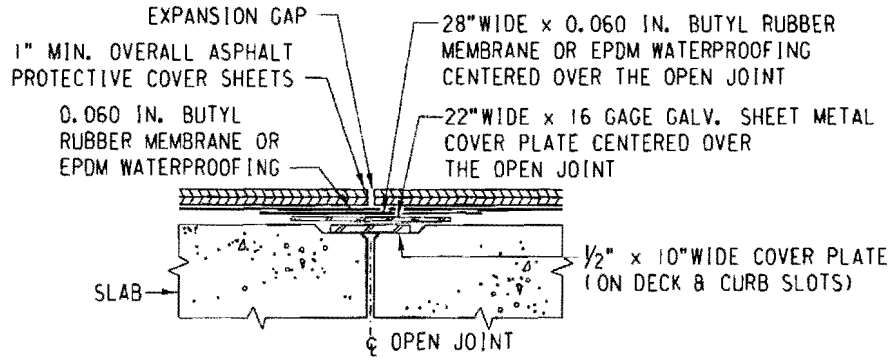

TYPICAL LONGITUDINAL SECTION AT BENTS & BACKWALL

NO SCALE

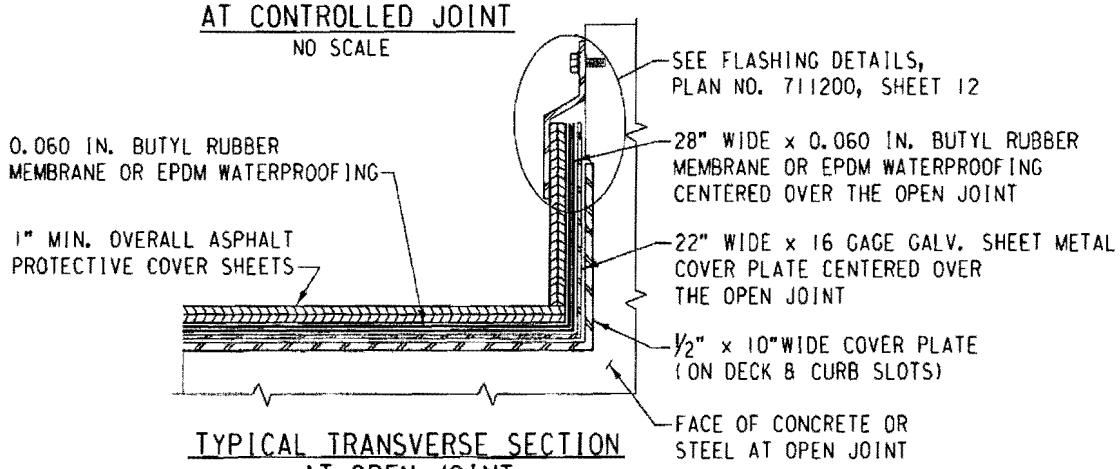

TYPICAL TRANSVERSE SECTION AT OPEN JOINT

NO SCALE

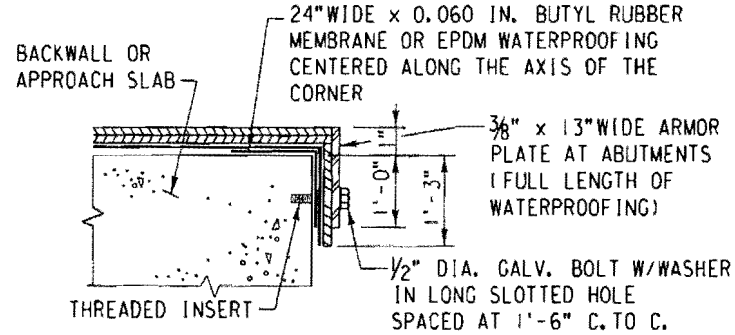

TYPICAL LONGITUDINAL SECTION AT END OF BACKWALL / APPROACH SLABS

NO SCALE

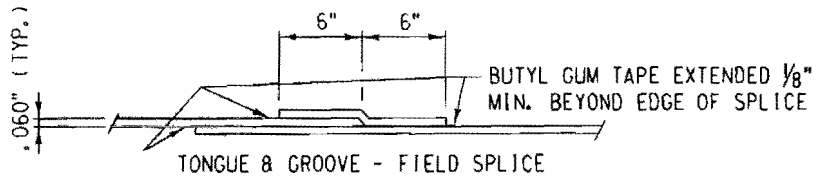

BUTYL RUBBER MEMBRANE OR EPDM WATERPROOFING SPLICE DETAIL

NO SCALE

REVISIONS		
DATE	LTR.	DESCRIPTION
/		
/		
/		
/		
/		
/		

DESIGN BY: RAF | DRAWN BY: FJS | CHECKED BY: KHJ

APPROVED:

K.H. Jennison

BNSF - ASSISTANT DIRECTOR STRUCTURES DESIGN

George J. Meyn

UPRR - MGR SPECIAL PROJECTS STRUCTURES DESIGN

BNSF RAILWAY

UNION PACIFIC

BRIDGE STANDARDS

GRADE SEPARATION GUIDELINES (UNDERPASS)

WATERPROOFING DETAILS

FILE OWNER: UPRR | DATE: 1/24/07

PLAN NO.: 711200 | SHEET: 11

PLOTTED: 3/30/2007 2:56:50 PM

FILE NAME: P:\station\dgn\std\pp_guidelines.dgn

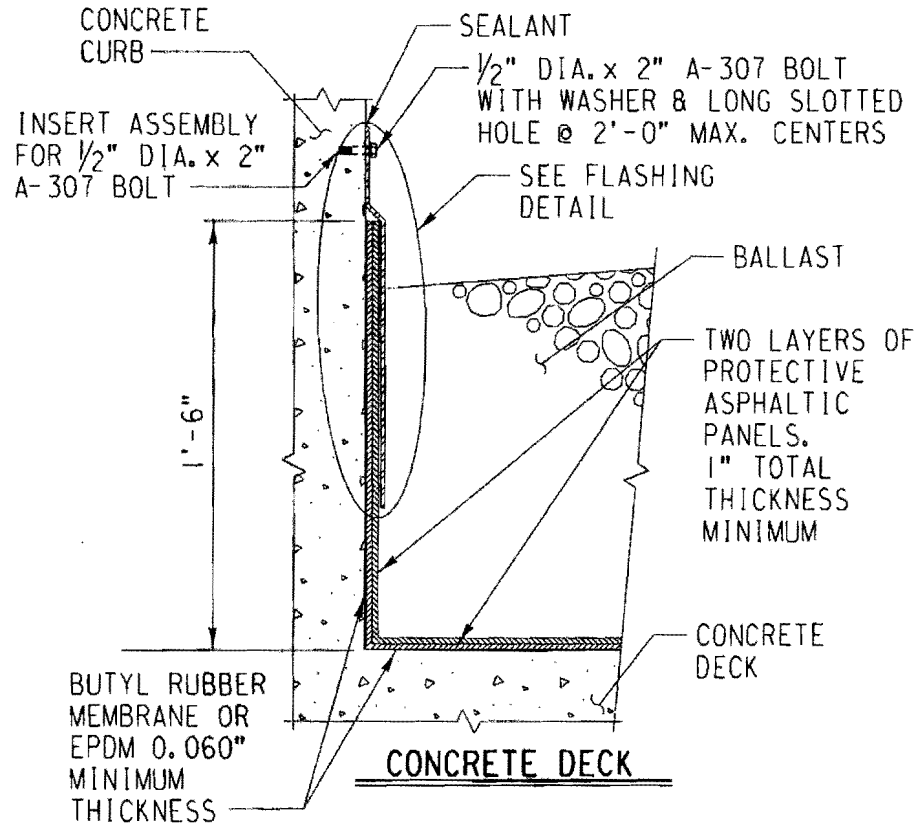

CONCRETE DECK

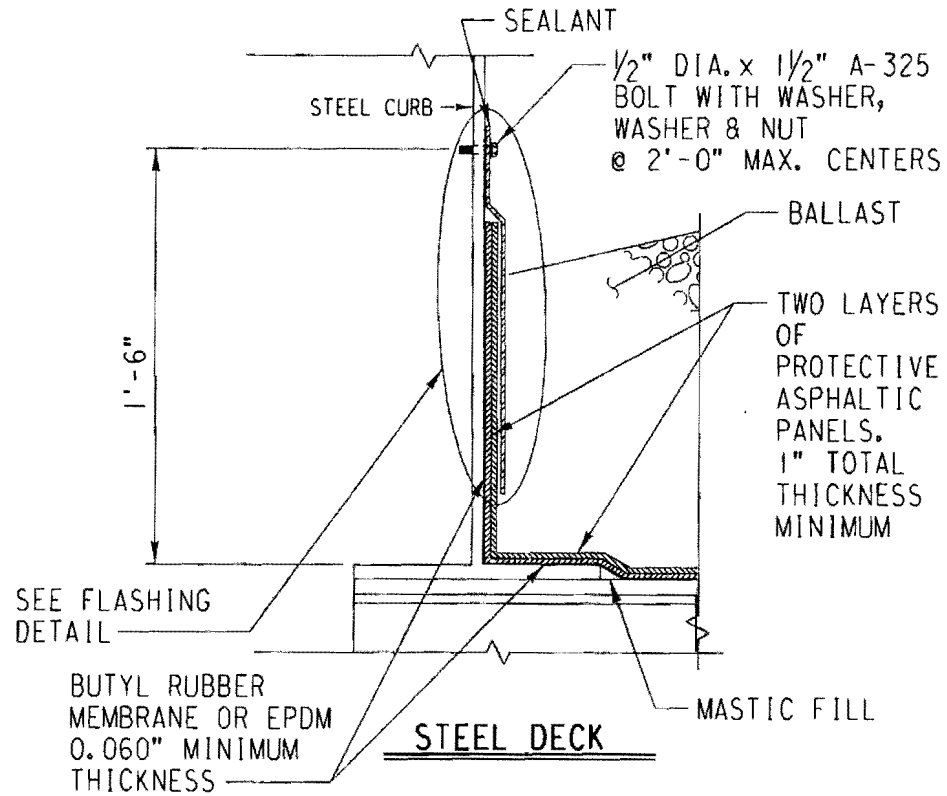

STEEL DECK

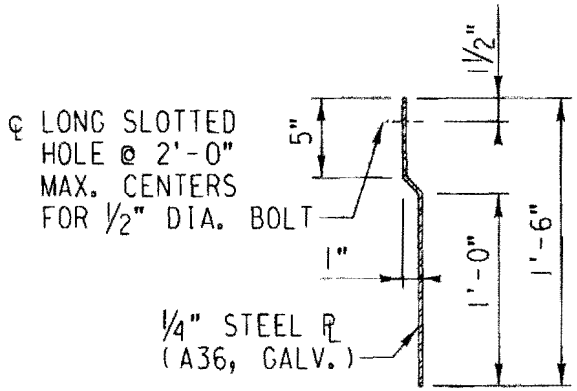

CURB FLASHING DETAIL

NOTES:

1. ALL STRUCTURAL STEEL PLATES, BOLTS AND WASHERS SHALL BE GALVANIZED.
2. DISCONTINUE FLASHING OVER PIERS AND ABUTMENTS.

REVISIONS		
DATE	LTR.	DESCRIPTION
/		
/		
/		
/		
/		
/		

DESIGN BY: RAF | DRAWN BY: MMD | CHECKED BY: KHJ

APPROVED:

K.H. Jennison

BNSF - ASSISTANT DIRECTOR STRUCTURES DESIGN

George J. Meyer

UPRR - MGR SPECIAL PROJECTS STRUCTURES DESIGN

BNSF RAILWAY

UNION PACIFIC

BRIDGE STANDARDS

GRADE SEPARATION GUIDELINES (UNDERPASS)

FLASHING DETAILS FOR WATERPROOFING

FILE OWNER: UPRR | DATE: 1/24/07

PLAN NO.: 711200 | SHEET: 12

PLOTTED: 3/30/2007 2:57:10 PM

FILE NAME: P:\ustation\dgn\std\pp_guidelines.dgn

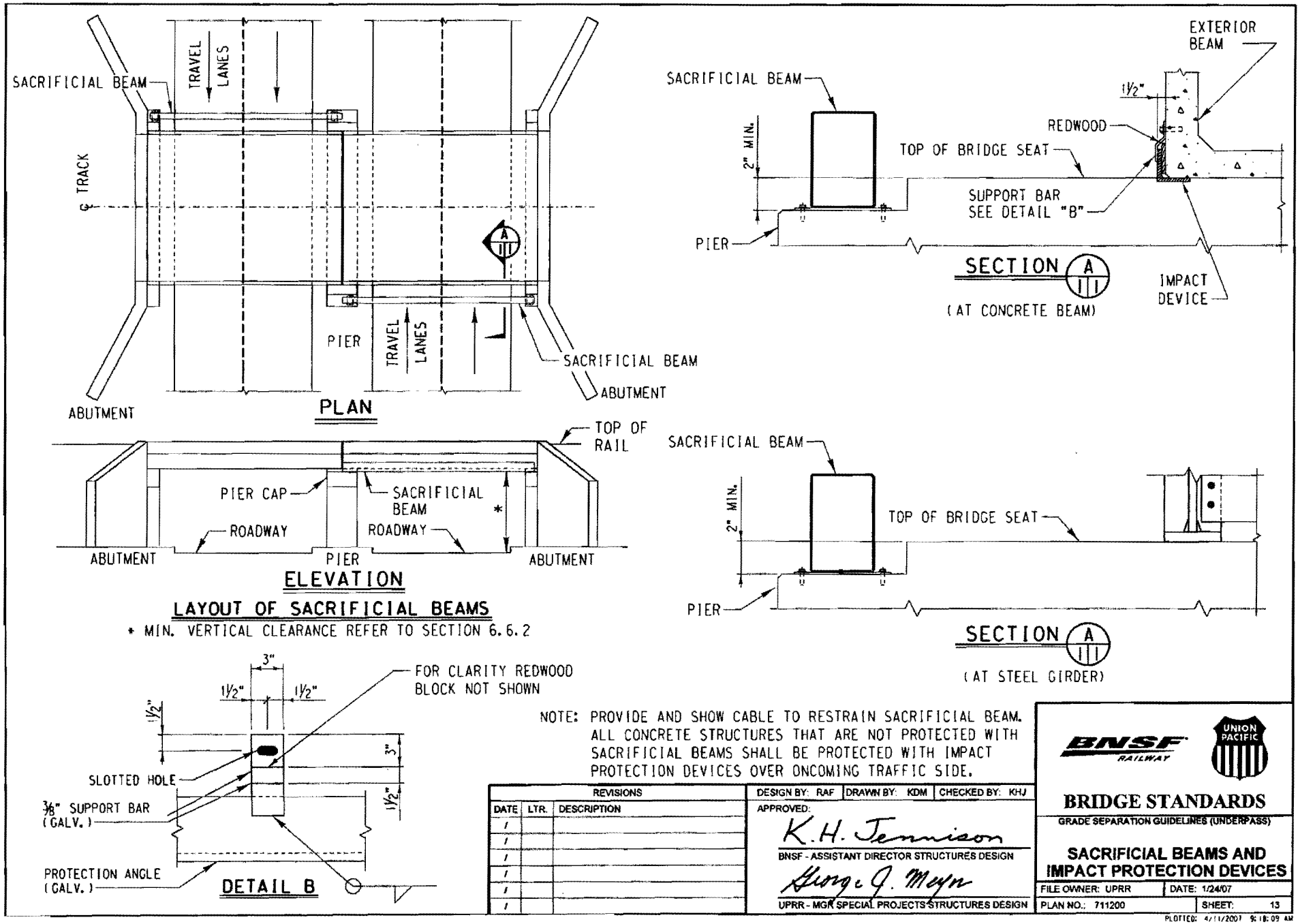

NOTE: PROVIDE AND SHOW CABLE TO RESTRAIN SACRIFICIAL BEAM. ALL CONCRETE STRUCTURES THAT ARE NOT PROTECTED WITH SACRIFICIAL BEAMS SHALL BE PROTECTED WITH IMPACT PROTECTION DEVICES OVER ONCOMING TRAFFIC SIDE.

REVISIONS		
DATE	LTR.	DESCRIPTION
/		
/		
/		
/		
/		
/		

DESIGN BY: RAF | DRAWN BY: KDM | CHECKED BY: KHJ

APPROVED:

K.H. Jennison

BNSF - ASSISTANT DIRECTOR STRUCTURES DESIGN

George J. Meyer

UPRR - MGR SPECIAL PROJECTS STRUCTURES DESIGN

BNSF RAILWAY

UNION PACIFIC

BRIDGE STANDARDS

GRADE SEPARATION GUIDELINES (UNDERPASS)

SACRIFICIAL BEAMS AND IMPACT PROTECTION DEVICES

FILE OWNER: UPRR | DATE: 1/24/07

PLAN NO.: 711200 | SHEET: 13

PLOTTED: 4/11/2007 9:18:09 AM

FILE NAME: P:\station\dgn\std\pp_guidelines.dgn