6 UNDERPASS STRUCTURES

(Railroad Structure Over Roadway)

The most desirable Grade Separation Structure from the standpoint of the Railroad is an Overhead Structure. The Applicant shall justify the use of an Underpass Structure in detail. The Underpass Structure shall be designed according to Sections 1, 2, 3, 4 and 6 of these Guidelines, the current edition of AREMA and any applicable sections of AASHTO. The Railroad strongly discourages construction of an Underpass Structure within or in the vicinity of Railroad yard limits.

6.1 Design

The proposed Underpass Structure design plans shall allow the Contractor to execute a work plan that enables the track(s) to remain in service per Railroad requirements. The proposed structure shall be designed so there is no interruption to the Railroad's operation during construction.

The Railroad discourages the use of structures that are not listed in **Section 6.8**.1 as an acceptable superstructure type. The use of Railroad standard spans where possible is encouraged. Only simple spans with ballast decks are allowed. Cast-in-place concrete superstructures are unacceptable.

6.1.1 Design Loads

The proposed Underpass Structure shall be designed for the following loads:

- Live load and Impact as specified in AREMA. For multiple track structures, live load shall be calculated based on the assumption that the track(s) can be located anywhere on the bridge with the horizontal clearance to the handrail defined in **Section** 6.6.1, and a maximum track spacing of 13 feet. For actual track spacing refer to **Sections** 4.1.2 and **4.1.3**.
- Dead load shall include up to 30 inches of ballast from top of deck to the top of tie and all other applicable dead load.
- Seismic design shall comply with the criteria of the current edition of AREMA, Chapter 9 - Seismic Design for Railway Structures.
- Additional loads shall be applied as specified in Chapters 8, 9, and 15 of AREMA, as applicable.

6.1.2 Design Plans and Calculations

Design plans and calculations shall be in accordance with these Guidelines and submitted per **Section** 3. Compliance with these Guidelines will expedite the review and approval process of submittals for the Grade Separation Project.

6.1.3 Concrete Requirements

All concrete material, placement and workmanship shall be in accordance with Chapter 8 of the current edition of AREMA and the following:

1. Minimum Compressive Strength – 4000 lb. per square inch at 28 days.
2. Exposed surfaces shall be formed in a manner that will produce a smooth and uniform appearance without rubbing or plastering. Exposed edges of 90 degrees or less are to be chamfered ¾" x ¾". Top surface to have a smooth finish, free of all float or trowel marks with the exception that a broom finish be used on all walkway surfaces.
3. Concrete shall be proportioned such that the water-cementitious material ratio (by weight) does not exceed the values in AREMA Table 8-1-9. Precast concrete must contain a minimum of 610 pounds of cementitious material per cubic yard of concrete. Cast-in-place concrete must contain a minimum of 565 pounds of

cementitious material per cubic yard of concrete. If fly ash is used with cement it shall be limited to 15% of cementitious material.

4. Cement shall be Type I, II or III Portland Cement per ASTM C150.
5. Course aggregate shall be size no. 67.
6. Fine aggregate shall be natural sand.
7. Admixtures, other than air entrainment, shall not be used without approval by the Railroad.
8. Membrane curing compound shall conform to ASTM C309 Type 2.
9. Apply ThoRoc Epoxy Adhesive 24LPL or approved alternate before placing new concrete against hardened surfaces.
10. For precast elements, the fabricator shall stencil the fabricator's name, date of fabrication, the bridge number, lifting weight and piece mark on each component.
11. The production facility must be pre-certified. Production procedures for the manufacture of precast members shall be in accordance with AREMA and the current edition of the Precast Concrete Institute's Manual MNL 116 for Quality Control.
12. Dimensional tolerances governing the manufacture of precast members shall conform to Division VI, Section 6.4.6 of the Precast Concrete Institute's Manual MNL 116 for Quality Control. Tolerance for location of lifting devices shall be ± ½".
13. The area around all lifting loops shall be recessed so that the loops can be removed to a depth of ¾" and grouted. Properly designed lift anchors are acceptable in lieu of lifting loops.
14. The fabricator will be responsible for the loading and properly securing the precast concrete members for shipment. All concrete components shall be made available, at the Railroad's discretion, for inspection by the Engineer-of-Record and the Railroad at the fabricator's plant prior to shipment.
15. Foam used to create internal voids in a precast concrete member, such as in box beams, shall be securely tied down to prevent displacement during concrete placement.

6.1.4 Reinforcing Steel Requirements

1. Reinforcing Steel shall be deformed, new billet bars per current ASTM A615 Specifications and meet Grade 60 requirements.
2. Reinforcing Steel requiring field welding or bending shall conform to ASTM A706 Specifications, Grade 60.
3. Fabrication of reinforcing steel shall be per Chapter 7 of the CRSI Manual of Standard Practice. Dimensions of bending details shall be out to out of bars.
4. Reinforcing steel is to be blocked to proper location and securely wired against displacement. Tack welding of reinforcing is prohibited. Minimum concrete cover not otherwise noted shall meet current AREMA requirements.

6.1.5 Prestressing Strand Requirements

1. Prestressing strand shall be seven wire, uncoated and low relaxation which is in accordance with the requirements specified in ASTM A416, ACI 318 and AREMA Chapter 8.
2. The strand shall have an ultimate tensile strength of 270 ksi.

6.1.6 Structural Steel Requirements

1. All major elements subjected to railroad live load shall conform to the following minimum specifications, except as otherwise noted:
   a. Painted structures: ASTM A709 Grade 50,
   b. Unpainted structures: ASTM A709 Grade 50W.
2. All bolted connections shall be made with high strength bolts.

3. Material over 4 inches in thickness that is subject to railroad live load shall conform to the following specifications:
   a. Painted structures: ASTM A572 or ASTM A588.
   b. Unpainted structures: ASTM A588.
4. Elements not subjected to direct railroad live load (intermediate stiffeners, lateral bracing, diaphragms, ballast curbs, etc.) shall conform to the following specifications:
   a. Painted structures: ASTM A572 Grade 50, ASTM A36 or ASTM A992.
   b. Unpainted structures: ASTM A588.
5. Steel bridge deck shall conform to A709 specifications, Grade 36.
6. Deck cover plates and closure plates may be per ASTM A36 specifications.
7. Anchor rods/bolts shall conform to ASTM F1554 specifications.
8. End welded studs shall be C1015, C1017 or C1020 cold drawn steel, which conforms to ASTM A108 specifications.
9. Cover plate, closure plates and anchor rods/bolts shall be galvanized after fabrication in accordance with ASTM A123, thickness Grade 100.
10. Anchor rod washers shall be zinc coated in accordance with ASTM A153 specifications.

6.2 Future Track and Access Road

It is required to verify the need and requirements for future tracks and/or Access Road for each project. Future track shall be in accordance with Section 4.1.3. Access Roads shall be in accordance with Section 4.1.4 and 6.2.1.

6.2.1 Access to Underpass Structure

For all Underpass grade separation structures, access to each end of the bridge shall be provided for Railroad off-track maintenance equipment. Access may consist of a road on the bridge, a road on a separated bridge or a roadway with turnarounds.

If the bridge maintenance Access Road is part of the main railway structure, the structure shall be designed for Cooper E-80 live load to accommodate any future track needs or modifications. A removable concrete barrier shall be provided to separate the nearest track from the Access Road by retaining the ballast. If the bridge maintenance access is a completely separate structure it shall be designed for AASHTO HS25-44 live load. The Access Road shall accommodate one 12 foot wide lane with curbs and railing.

If a bridge maintenance structure is not provided, an Access Road with a turnaround shall be designed and constructed in conjunction with the grade separation bridge structure. The turnaround pad shall start no further than 30 feet from the end of the bridge structure with the embankment shoulder a minimum of 60 feet from centerline of track. The radius for the turnaround shall be a minimum of 50 feet. Roadway grade shall not exceed 10% and shall terminate at the sub-ballast elevation. The roadway shall have sufficient width to provide for one 12 foot wide road, drainage ditch and shoulder. The turnaround pad and roadway shall be sloped to drain away from the track and carry the water to a drainage system or existing Railroad right-of-way ditches.

Access Road with a bridge maintenance structure or turnaround shall be shown in the 30% submittal and the complete design shall be included in all subsequent submittals.

6.3 Skew

The preferred angle of intersection between centerline of track and the centerline of bridge supports, transverse to the track, is 90 degrees. The minimum angle that will be allowed between the centerline of the track and the

centerline of bridge supports, transverse to the track, is 75 degrees for a Concrete Superstructure and 60 degrees for a Steel Superstructure.

Align bridge piers and abutments as required to comply with the above maximum skew limitations. Tie rods, diaphragms and approach slabs shall be designed per **Section 6.8.10.1, 6.8.8.1** and **6.4**, respectively.

Where conditions preclude compliance with these skew requirements, the skew proposal will require special structural consideration and proof of adequacy.

6.4 Approach Slab

On skewed abutments an approach slab is required. The bridge end of the approach slab shall be skewed and doweled with the abutment while the other end of the approach slab is perpendicular to the centerline of track to insure uniform subgrade stiffness for the ties immediately adjacent to the bridge. The approach slab shall be constructed symmetrically to the centerline of the track and shall be a minimum of 12 feet wide and extend parallel to the track a minimum of 3 feet beyond the back edge of the abutment.

6.5 Structure Separation

Horizontal separation between Railroad structures or Railroad and Access Road structures shall be minimum of 5 feet clear. All other structure separations shall be in accordance with **Section 4.3**.

6.6 Clearances

Permanent clearances shall be correlated with the methods of construction to ensure compliance with the temporary clearances specified in **Section 4.4.1**.

6.6.1 Permanent Vertical Clearance

Underpass Structures shall be designed to ensure that the structure will be protected from oversized or unauthorized loads by providing sufficient vertical clearance and protective devices unless otherwise specified by the Railroad. Provide a minimum vertical clearance over the entire roadway width for all new or reconstructed structures as follows:

- 16'-6" for steel superstructure with 5 or more beams or 4 or more deck plate girders per track.
- 17'-6" for concrete superstructure or steel through plate girders with bolted bottom flanges.
- 20'-0" for steel through plate girders without bolted bottom flanges.

The vertical clearance must not be violated due to the deflection of the superstructure.

Variations from vertical clearance defined above shall be submitted to the Railroad for approval. The variance will be considered if the Railroad structure is not the lowest structure within the roadway network. All proposed structures with substandard vertical clearances shall be designed per **Section 6.7**.

If resurfacing or any other activity is to be performed below the Underpass Structure, the owner of the roadway must submit a request for approval from the Railroad. This request must provide the existing measured and posted clearances of the structure and the proposed configuration after work is completed.

The owner of the roadway shall be responsible for graffiti removal and for posting and maintaining the clearances and any advance notifications the roadway requires. No sign shall be attached to the Railroad bridge.

6.6.2 Permanent Horizontal Clearance

The horizontal clearances from the centerline of the nearest track to any bridge component shall, in all cases, conform to AREMA requirements except that in curved track the minimum increase in clearance shall be 6 inches. Proposed structures that accommodate multiple tracks, future tracks and existing tracks having a spacing less than 20 feet, shall be designed for a minimum of 20 foot spacing measured centerline to centerline.

6.6.3 Temporary Clearances

The proposed Underpass Structure shall be designed to satisfy temporary construction clearance requirements per **Section 4.4.1**, which shall be shown on the plans in accordance with Figure 1 on **Plan No. 711100, sheet 3**.

6.7 Sacrificial Beams, Fascia Beams and Impact Protection Devices

All structures with vertical clearances less than defined in **Section 6.6.1** shall be protected with a sacrificial beam. Access to the sacrificial beam shall be blocked on both ends and the sacrificial beam shall be located to safeguard the bridge from oncoming vehicles.

Sacrificial beams shall be steel shapes (wide flange or hollow structural sections) and of sufficient strength to limit horizontal deflection, caused by the impact from oversized vehicles or loads, to 6 inches. The sacrificial beams shall also be securely anchored with cables at each end to prevent them from falling, and its soffit shall be at least 2 inches below the bridge soffit.

Concrete fascia beams used as walkways shall be installed adjacent to the proposed structure and may also serve as a sacrificial beam. If a concrete fascia beam is used as a sacrificial beam it shall have a 6" x 6" x 1" embedded steel angle facing oncoming traffic and shall be adequately anchored to the bridge seats at an elevation at least 2 inches below the bridge soffit.

All concrete spans, where sacrificial beams are not required, shall be protected with impact protection devices installed over the full width of traveled lanes and attached to the bridge soffit. See **Plan No. 711200, sheet 13**.

6.8 Superstructure

The size of the superstructure must accommodate future track(s) per **Section 4.1.3** and Access Road per **Section 4.1.4**. For typical cross sections of superstructures see **Plan No. 711200, sheets 2 through 9**.

6.8.1 Acceptable Superstructure Types

The following is a list of Underpass Structure types that are acceptable to the Railroad and listed in the order of preference. The Railroad's preferred superstructure type is the highest listed feasible alternative unless a detailed type selection report provides justifications that a lower listed alternative is more beneficial to the Railroad and to the project.

1. Rolled Beams with Steel Plate Deck. There shall be at least five beams per track.
2. Steel Plate Girders with Steel Plate Deck. There shall be at least four girders per track.
3. Rolled Beams with Concrete Deck. There shall be at least five beams per track.
4. Steel Plate Girders with Concrete Deck. There shall be at least four girders per track.
5. Railroad Standard Prestressed Precast Concrete Double Cell Box Beams.
6. Prestressed Precast Concrete Box Beams, single or double cell for span of 50 feet or less.
7. Prestressed Precast Concrete AASHTO Type Beams, (or similar) with Concrete Deck for spans of 50 feet or less.
8. Steel Through Plate Girders with Steel Plate Deck will be considered by the Railroad when conditions preclude any other structure type.

Underpass Structures of deck truss or through truss design are discouraged. However, in unusual circumstances, they will be considered by the Railroad if conditions preclude the use of any other type of structure.

6.8.2 Deck Type and Width

In all cases, when using a steel superstructure the use of a steel deck is preferred. The deck width shall be a function of future track, Access Road, existing track(s), minimum horizontal clearance per **Section 6.6.2** and a minimum of 20 foot spacings between centerlines of tracks.

6.8.3 Composite Deck

Under normal working loads, composite action may be expected between a concrete deck and its supporting girder steel members when shear transfer devices are used. The bottom of the deck slab shall be placed at least one inch below the top of supporting steel members. For design purposes, the supporting girders shall be designed to satisfy deflection criteria and carry E65 live, impact and dead loads without utilizing any composite action, and E80 live, impact, and dead loads utilizing composite action. Composite action may be mobilized to satisfy the deflection-length ratio requirement of Chapter 15, Article 1.2.5 of AREMA, provided shear transfer devices are installed. Steel decks may be utilized in composite action to satisfy the deflection-length ratio requirement. However, composite action shall not be assumed to satisfy strength requirements.

6.8.4 Ballast Retainers, Fences and Handrails

Ballast retainers must be designed to prevent ballast from falling on the roadway. Handrails with fencing shall be provided on both sides of the deck and shall meet FRA and OSHA requirements. Handrails and fences shall be simple designs that require minimum maintenance and shall meet clearance requirements of **Section 6.6.1**. Fences are required over all roadways, trails and sidewalk areas.

The top of ballast retainer shall be minimum of 30 inches above top of deck if fascia beam is used in accordance with typical sections shown in Appendix A. If fascia beam is not used, top of ballast retainer shall be 36 inches above top of deck.

6.8.5 Walkway

Walkways on bridges, over highways or other locations where spillage of ballast or lading is possible shall be constructed of solid material and a curb or toe board shall be provided. In accordance with **Section 6.6.1**, the clear distance from centerline of track to the ballast retainer for bridges without a walkway shall be a minimum of 8'-0". To prevent cracking under live loads, provide 1/4 inch wide control joints at less than 10 foot spacing on concrete curbs, walkways and ballast retainers.

Ballast section may be used as walkway, at the discretion of the Railroad, provided the permanent horizontal clearances are in accordance with **Section 6.6.2**. If a solid walkway surface is required, it shall be a minimum of 2'-6" wide and be provided on both sides of the structure.

6.8.6 Drainage

A minimum longitudinal grade of 0.2% on the superstructure shall be provided to ensure adequate drainage. The designer may provide drainage toward one end of the structure, or when the structure's length is excessive, provide adequate deck grades to drain the structure to both ends. If the top-of-rail grade is less than 0.2% over the length of the structure then the depth of ballast may be varied along the structure.

The top of the concrete deck shall be sloped a minimum of 0.5% transversely.

For concrete decks, a longitudinal collection system shall be provided on top of the waterproofing along the face of parapet or curb to drain water. Longitudinal drains shall be connected to the storm drain system or properly discharged at the toe of embankment slopes. See **Plan No. 711200, sheet 10**.

If an approach grade descends toward the bridge, drainage from the approach shall be intercepted by an appropriate system so that it will not drain onto the bridge.

Inadequate drainage facilities can severely limit the life span of the superstructure. When designing drainage facilities for a structure two important criteria to keep in mind are:

1. Drains should be constructed of corrosion resistant material and the use of PVC shall not be permitted.
2. Drains should not discharge on other bridge elements or traffic passing underneath the structure.

The drip groove located on the bottom of the deck slab or fascia beam shall end 3 feet before the face of the abutment.

6.8.7 Waterproofing

Waterproofing and protective panels shall comply with the recommendations of Chapter 8, Part 29 of AREMA. The waterproofing shall be one layer of Butyl Rubber or EPDM membrane and shall be bonded to the entire bridge deck surface with adhesive applied in accordance with the recommendations of the membrane manufacturer. A Butyl Rubber or EPDM membrane shall be 0.06 inches thick, minimum. Field splices shall be the tongue and groove type per AREMA Chapter 8, Part 29, Detail No.3, Figure 8-29-3. Protective asphalt panels shall be placed in two layers with total thickness not less than 1 inch and shall be laid with joints staggered. Protective panels shall be bonded to the membrane and each other. For waterproofing details see **Plan No. 711200, sheet 11**.

Alternatively, a cold liquid spray on waterproofing meeting AREMA requirements, with a single ½ inch layer of protective asphalt panels, may be acceptable to the Railroad.

Six inches of ballast shall be placed over waterproofing immediately upon acceptance by the Railroad. No construction traffic is allowed on waterproofing until the ballast covering is in place. Waterproofing installation shall be observed and approved by the manufacture's representative.

6.8.8 Steel Superstructure

The thickness of structural steel, except for fillers, shall not be less than 3/8 inch. Steel, subject to corrosive influences, shall be of greater thickness than otherwise specified to protect them against deterioration.

The thickness of gusset plates connecting the chords and web members of a truss shall be proportional to the force being transferred but not less than 1/2 inch.

The minimum diameter of high strength bolts shall be 7/8 inch diameter.

Floor beams shall be a minimum of 21 inches in depth.

The allowable bearing pressures as recommended in AREMA Chapter 15 shall be used for steel superstructures bearing on concrete substructures.

All fracture critical members as defined by AREMA shall be designated as FCM on the plans. Fracture critical members shall be designed for a minimum service temperature and Charpy V-Notch Toughness as required for the corresponding zone.

The Designer shall provide details such that all exposed parts will be accessible for inspection, cleaning and painting. Not less than 18 inches of clearance shall be provided between the flanges of parallel lines of beams or girders having depths in excess of 38 inches.

All designs must provide drain holes for pockets or depressions that may hold water so that steel areas drain effectively. Structural members shall not be sealed by welding except as approved by the Railroad.

In built-up steel girders, provide at least 2 feet between the web and the flange shop-welded splices.

6.8.8.1 Diaphragms or Cross Frames

Diaphragms or Cross Frames shall be provided for all steel spans. Jacking stiffeners or jacking beams are required for all steel structures.

6.8.8.2 Mechanically-Connected: Bottom Flanges and Intermediate Stiffeners

Girders shall have mechanically-connected bottom flanges and intermediate stiffeners when:

- The girder span is over a roadway and the use of two girders per span or track cannot be avoided (such as a through plate girder).
- 20 feet of vertical clearance cannot be provided.

Cover plates, flange elements and intermediate stiffeners shall comply with the following requirements.

1. Cover plates of girders with bolted flanges shall be equal in thickness or shall diminish outwardly in thickness. No plate shall be thicker than the flange angles. The gross area of cover plates in any flange shall not exceed 70 percent of the total flange. The total flange consists of cover plates, flange angles directly connected to the cover plates and side plates. The area of any flange element (flange angle, cover plate or side plate) shall not exceed 50 percent of the total flange.
2. Flange elements that are spliced shall be covered by extra material equal in section to the element spliced. There shall be enough bolts on each side of the splice to transmit to the splice material the stress value of the part cut. Flange angles may be spliced with angles or with a full penetration weld. No two elements shall be spliced at the same cross section or within the development length of another spliced element. Welded splices will not be allowed in plate elements of bolted flanges.
3. All intermediate stiffeners shall have a bolted connection to the web.

6.8.9 Painting of Steel Structures

Painting of steel structures shall comply with the current requirements of AREMA, AASHTO specifications and recommendations of the Steel Structures Painting Council (SSPC).

Paint shall be applied in accordance with the Manufacturer's recommendations or as recommended by the SSPC, whichever is most restrictive.

The painting system, including primer and top coats, shall be submitted by the Applicant for review and approval by the Railroad and must be maintained by the Applicant.

6.8.10 Concrete Superstructure

Live load distribution for precast prestressed concrete single or double cell box beams shall be in accordance with Chapter 8, Part 2, Reinforced Concrete Design, Article 2.2.3.c of AREMA. This means that it shall not be assumed that the live load is necessarily equally distributed to the number of boxes supporting the tracks.

Box shaped (Single or Double void) or AASHTO type precast prestressed concrete beams for all spans shall be designed with end and interior diaphragms. Interior diaphragms shall be spaced equally across the span length.

Strands at the ends of precast prestressed concrete members shall be recessed a minimum of 1 inch into the member and the pocket filled with grout.

For AASHTO type beams, the designer shall provide a minimum of eighteen (18) inches clear between the bottom flanges to accommodate inspection and repair.

6.8.10.1 Tie Rods

Transverse tie rods shall be provided for all concrete spans utilizing single cell box beams. Transverse tie rods shall be used at span ends and intermediately spaced at maximum intervals of 25 feet. Wherever possible, transverse tie rods in end and interior diaphragms shall be placed perpendicular to the centerline of webs to facilitate application of transverse post-tensioning.

The minimum size of tie rod shall be 1-1/4 inches in diameter. Tie Rods shall be threaded steel bars with a minimum f_y = 36 ksi. Tie rods shall be tensioned as necessary to ensure that all beam sides are in contact without causing any vertical displacement of the beams from the bearings. The tie rod shall be protected in one of the following ways:

1. Rod, plates and nuts shall be hot dip galvanized per ASTM A123 and A153 specifications.
2. All assembly parts left plain but void between rod and hole to be pressure grouted. The tie rod anchor assembly shall be recessed into the concrete and shall have 1 inch minimum grout cover.

6.9 Substructure

Pier and or abutment dimensions must accommodate future track(s) and Access Road per **Section** 4.1.3 and 4.1.4.

Footings for all substructures shall be located and designed to allow a minimum of 12 feet measured perpendicular from centerline of nearest active track to face of shoring to facilitate footing construction. Temporary shoring shall be designed per **Section** 4.4.2.

Cross-hole Sonic Log (CSL) Testing may be required by the Railroad to evaluate the integrity of drilled shafts/caissons. The Plans and Specifications shall include provisions for this testing.

Drilled shafts within the influence of track surcharge shall be designed with temporary casing for protection against cave-in, subsidence and or displacement of surrounding ground. Casing shall be designed for live load due to the Railroad surcharge in addition to all other applicable loads. Drilled shafts shall be designed to allow the drilling operation to proceed without impacting the Railroad operation.

6.9.1 Piers

Columns shall be at least 0.2H in thickness at the base. Slope the top of bridge seat to drain. If weathering steel is used for the superstructure, detail the bridge seat to minimize water staining concrete surfaces.

Provide a minimum edge distance of 6 inches from edge of masonry plate or bearing to edge of concrete.

Provide a minimum of 18 inches beyond the outside edge of outermost masonry plate or bearing to end of the pier.

Single column piers shall not be considered for Underpass Structures. Piers with a minimum of two columns shall be provided. A solid pier wall with minimum of 4 feet thickness is preferable.

Bridge piers adjacent to roadways shall be protected from vehicular traffic as required per AASHTO and State Department of Transportation standards.

6.9.2 Abutments

Slope the top of bridge seat to drain. If weathering steel is used for the superstructure, detail the bridge seat to minimize water staining concrete surfaces.

The abutments shall be wide enough to satisfy the Railroad standard roadbed. For multiple track bridges, the abutment width shall be sufficient to provide for the standard shoulder, plus 20 feet for each existing or future track.

Provide a minimum edge distance of 6 inches from edge of masonry plate or bearing to edge of concrete.

Sloping embankments in front of abutments shall be paved or have grouted rip-rap on top of filter fabric.

The year of construction shall be shown at the face of abutment backwall. Numbers shall be embedded into the concrete and be 6 inches size and located where visible.

Wing walls shall be designed to support 2:1 embankment slopes and provide positive ballast containment.

6.10 Sequence of Construction

It is essential that the construction proceed with no interference to Railroad operations. Continuity of safe rail operation will be required for the duration of the project. The Applicant should contact the Railroad Local Representative in the preliminary design stages to determine the Railroad operation requirements.

The most effective method for maintaining traffic is to temporarily reroute Railroad traffic around the construction site using detour tracks (shooflys). Shooflys shall be designed per **Section 4.1.1**.

The use of shooflys for the construction of the permanent structures will minimize traffic interference with railroad operations. However, if construction requires interruption of rail traffic or track and time windows, approval from the Local Service Unit Superintendent of the area is required. No design shall advance without written approval. Prior to the start of any construction on Railroad right-of-way, a Railroad Right-of-Entry Agreement (if applicable) is required per **Section 2.3**.

6.11 Construction Excavation

Excavations for construction of footings, piers, columns, walls and other facilities that require shoring to support active tracks shall comply with BNSF/UPRR Temporary Shoring Guidelines

6.12 Temporary Structures

Temporary railroad bridges used for a shoofly must be designed in accordance with AREMA and these Guidelines. Temporary open deck bridges with walkways may be used if a protective cover over the roadway and sidewalks is provided or if the roadway is closed to traffic during construction.

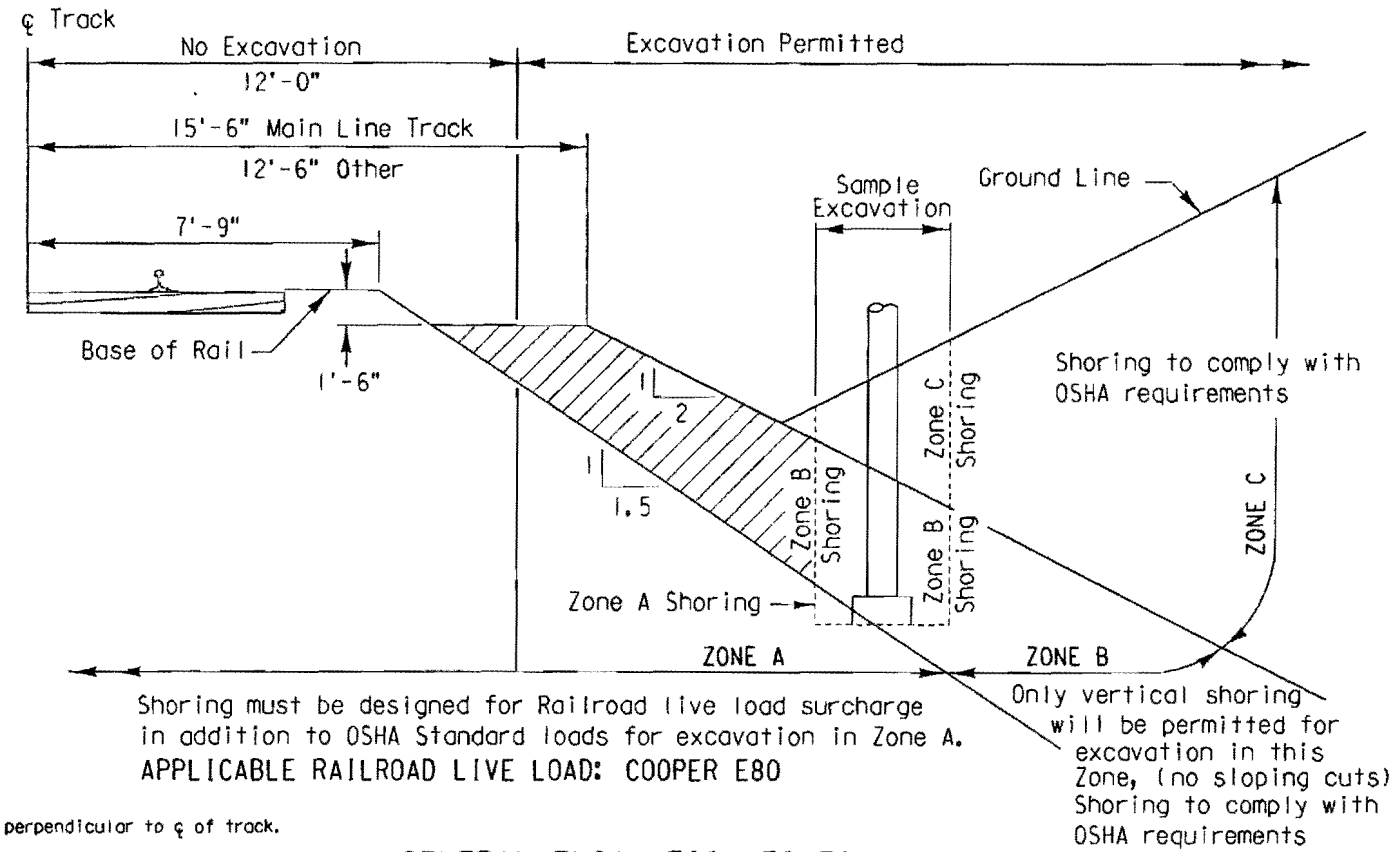

GENERAL EXCAVATION ZONES

SCALE: (NOT TO SCALE)

GENERAL NOTES:

All dimensions are measured perpendicular to ℄ of track.

Prior to commencing any work, the contractor shall submit for approval by the Railroad detailed plans indicating the nature and extent of the track protection shoring proposed. The contractor shall install the temporary shoring system per the approved plans. Design of the temporary shoring system to comply with **GUIDELINES FOR TEMPORARY SHORING.**

For excavations which encroach into zone A or B, shoring plans shall be accompanied by design calculations. Plans and calculations must be signed and stamped by a Professional Engineer registered in the state where the work will be performed.

REVISIONS		
DATE	LTR.	DESCRIPTION
5/03	1	FORMERLY UPRR C.E. 106813
/		
/		
/		
/		
/		

DESIGN BY: PGP | DRAWN BY: JFS | CHECKED BY: AA

APPROVED:

K.H. Jennison

BNSF - ASSISTANT DIRECTOR STRUCTURES DESIGN

George J. Myers 8-1-04

UPRR - MGR SPECIAL PROJECTS STRUCTURES DESIGN

BRIDGE STANDARDS

GENERAL SHORING REQUIREMENTS

FILE OWNER: UPRR | DATE: 5-6-03

PLAN NO.: 710000 | SHEET: 1 OF 1

PLOTTED: $$$$DATE$$$$ $$$$TIME

7 TRAILS

(Non-Vehicular Crossing over or under the Railroad)

All Trails impacting the Railroad shall be designed in accordance with Section **1, 2, 3, 4 & 7** of these Guidelines, the Manual of Uniform Traffic Control Devices (MUTCD), AASHTO code and any applicable sections of AREMA.

7.1 At Grade Crossing

The Railroad does not allow at grade Trail crossings. Alternative plans should be considered to avoid crossing Railroad tracks at grade. At grade crossings immediately adjacent to an existing public roadway crossing with existing Highway Railroad warning devices may be considered. However, all costs associated with the installation of the new crossing surface and crossing warning device changes or relocation will be borne by the Applicant. Scope of proposed crossing work will be determined at a joint diagnostic meeting between the Railroad and Applicant. The Trail must conform to Railroad and MUTCD requirements.

7.2 Trail Parallel to Track

The Railroad does not allow Trails parallel to the track on Railroad right-of-way and does not permit the use of Railroad Access Roads for trail use. Railroad bridges can not be used to serve Trail traffic or support a structure serving Trail traffic. Fences or barriers such as vegetation, ditches, and/or berms shall separate Trails that are outside the Railroad right-of-way and running parallel to the track to stop trespassers from entering the Railroad right-of-way. See **Plan No. 711000, sheet 2.**

7.3 Grade Separated Crossing

Consider the use of existing structures to cross the Railroad tracks. In accordance with Homeland Security requirements some Railroad sites and structures are off limits for Trail use and crossing.

7.3.1 Overhead Crossing (Trail over Railroad)

New and existing Overhead Structures must be designed or modified with a protective curved fence. See **Plan No. 711100, sheet 4**. New Overhead Structures shall be designed per **Section 5** of these Guidelines.

7.3.2 Underpass Crossing (Railroad Structure over Trail)

The Railroad discourages the construction of new Underpass Structures. If an Underpass Structure is the only feasible structure type for the proposed site, a detailed type selection report must be submitted to justify its use.

7.3.2.1 New Underpass Crossing

New Underpass Structures shall be designed per **Section 6** of these Guidelines.

All pipe and concrete box culverts shall be designed per Railroad requirements and any applicable sections of AREMA. Confined structures are discouraged. To improve safety and sight distance all structures shall be tangent without curvature. The clear width and height of pedestrian structures shall be subject to the project site and structure length. The line of sight, historical security data and lighting shall be used for determining the required size of opening. Vertical Clearance shall not be less than 8 feet.

7.3.2.2 Crossing Under Existing Structures

An open deck structure shall be modified to a ballast deck or solid deck structure to maintain a safe crossing under a Railroad structure. If modifying an existing open deck structure is not practical, provide a protective cover over the Trail.

Protection from falling debris is required for the crossing of pedestrians safely under active rail bridges. The overhead protection shall extend a minimum of 30 feet out on each side of the Railroad structure, or further as designated by the Railroad's Central Engineering department. However, the protective cover shall not reduce the existing hydraulic opening, shall not function as a debris catcher and shall not impact proper inspection of the structure by Railroad personnel.

Measuring the from bottom of the Railroad structure to the top of the protective cover shall not be less than three feet to allow for inspection and shall not be attached to the structure. If the Applicant can not meet these requirements then the Applicant shall provide a removable hatch to allow Railroad personnel to inspect the bridge structure.

The protective cover shall be removable and can be removed, at the Applicant's expense, without advanced notice if deemed necessary by the Railroad.

A protective cover shall be required, meeting the above criteria, for ballast deck bridges unless the superstructure meets the requirements of **Section 6.8.4**.

7.4 Drainage

The drainage pattern of the site before and after construction shall be analyzed. Adequate drainage provisions shall be incorporated into the plans and specifications. Detailed Hydraulic Report may be required subject to site condition. The Hydraulic report must meet the Railroad Hydraulic Criteria per **Sections 4.5.2** and **4.5.3**.

7.5 Fence

The Applicant shall specify the appropriate fencing to contain the Trail traffic, within the Trail, crossing the Railroad right-of-way. Fence limits are subject to each project site and must be determined on a case by case basis. Refer to **Section 4.6** for fence requirements and **Plan No. 711000, sheet** 1 for fence details.

All Railroad right-of-way fencing, for Trails adjacent to the Railroad right-of-way, must be provided, installed outside Railroad right-of -way and maintained by the Applicant.

7.6 Signs

All access to Trails crossing railroad track shall be protected with bollard posts and signs prohibiting non-authorized vehicular access.

All advisory and regulatory signs shall be in compliance with MUTCD and AASHTO. "No Trespassing" signs shall be posted every 500 feet.

7.7 Lighting

Adequate lighting shall be provided per AASHTO Roadway Lighting Design Guide requirements. Dark confined and isolated Trail crossings hidden from public view may attract illegal activities. Line of sight is extremely important when visibility is a matter of safety and security. The lighting design shall account for the impact on train operations. Lighting shall provide visibility for the Trail without directing light toward the train traffic.

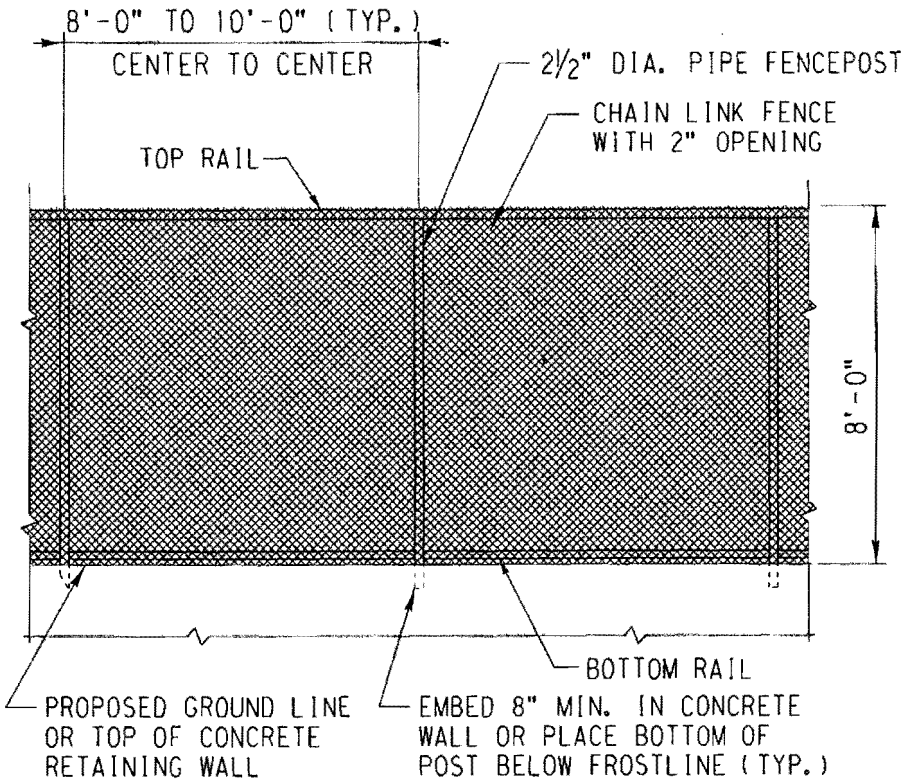

CHAIN LINK FENCE

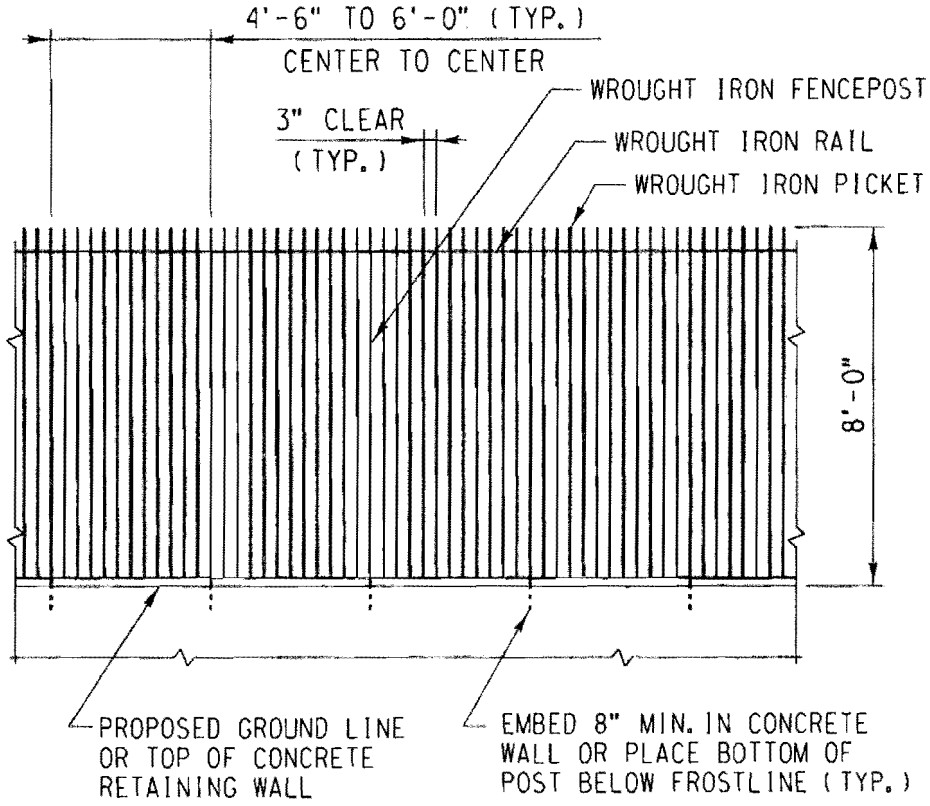

WROUGHT IRON PICKET FENCE

FENCE ELEVATION

SCALE: 3/16" = 1'-0"

REVISIONS		
DATE	LTR.	DESCRIPTION
/		
/		
/		
/		
/		
/		

DESIGN BY: RAF | DRAWN BY: FJS | CHECKED BY: KHJ

APPROVED:

K.H. Jennison

BNSF - ASSISTANT DIRECTOR STRUCTURES DESIGN

George J. Meyer

UPRR - MGR SPECIAL PROJECTS STRUCTURES DESIGN

BNSF RAILWAY

UNION PACIFIC

BRIDGE STANDARDS

RIGHT-OF-WAY FENCING

FENCE DETAILS

FILE OWNER: UPRR | DATE: 1/24/07

PLAN NO.: 711000 | SHEET: 1

PLOTTED: 3/30/2007 2:53:20 PM

FILE NAME: P:\station\dgn\std\pp_guidelines.dgn

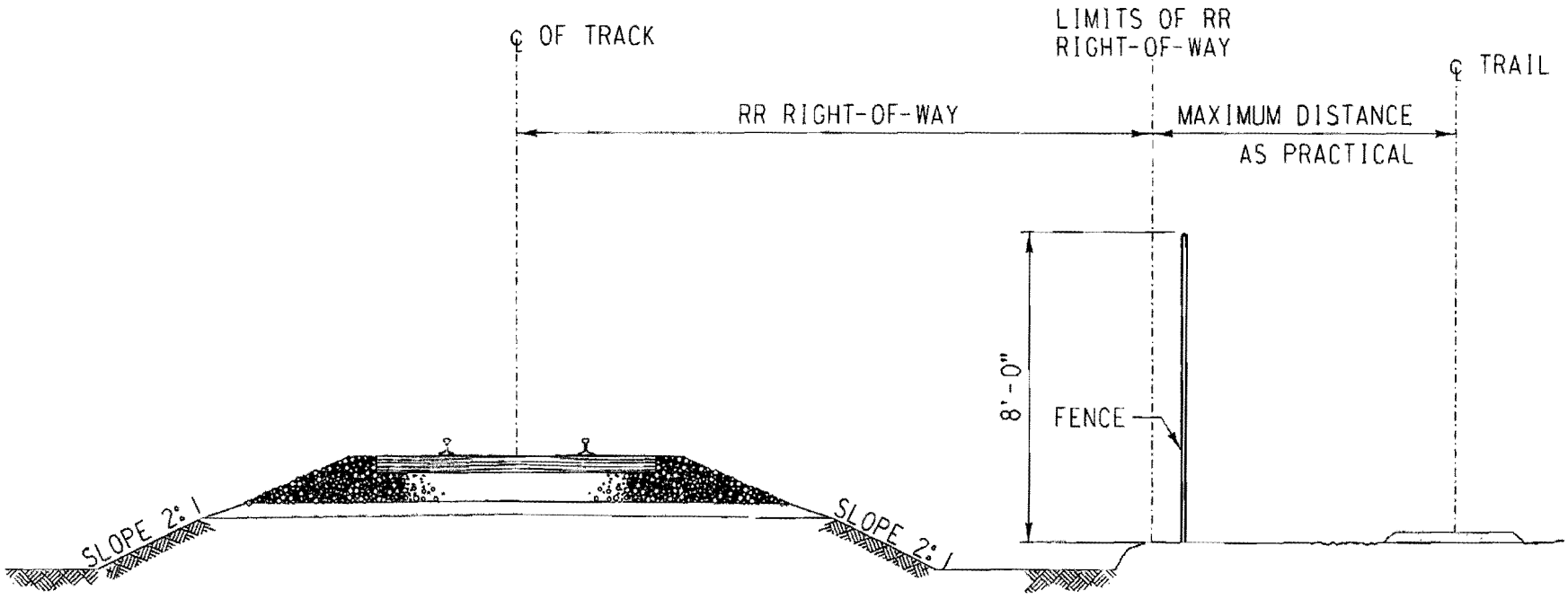

TYPICAL SECTION WITH STANDARD FLAT BOTTOM DITCH

REVISIONS		
DATE	LTR.	DESCRIPTION
/		
/		
/		
/		
/		
/		

DESIGN BY: RAF | DRAWN BY: FJS | CHECKED BY: KHJ

APPROVED:

K.H. Jennison

BNSF - ASSISTANT DIRECTOR STRUCTURES DESIGN

George J. Meyn

UPRR - MGR SPECIAL PROJECTS STRUCTURES DESIGN

UNION PACIFIC

BRIDGE STANDARDS

RIGHT-OF-WAY FENCING

FENCE REQUIREMENTS FOR ADJACENT TRAIL OUTSIDE RAILROAD RIGHT-OF-WAY

FILE OWNER: UPRR | DATE: 1/24/07

PLAN NO.: 711000 | SHEET: 2

PLOTTED: 3/30/2007 2:53:35 PM

FILE NAME: P:\ustation\dgn\std\pp_guidelines.dgn

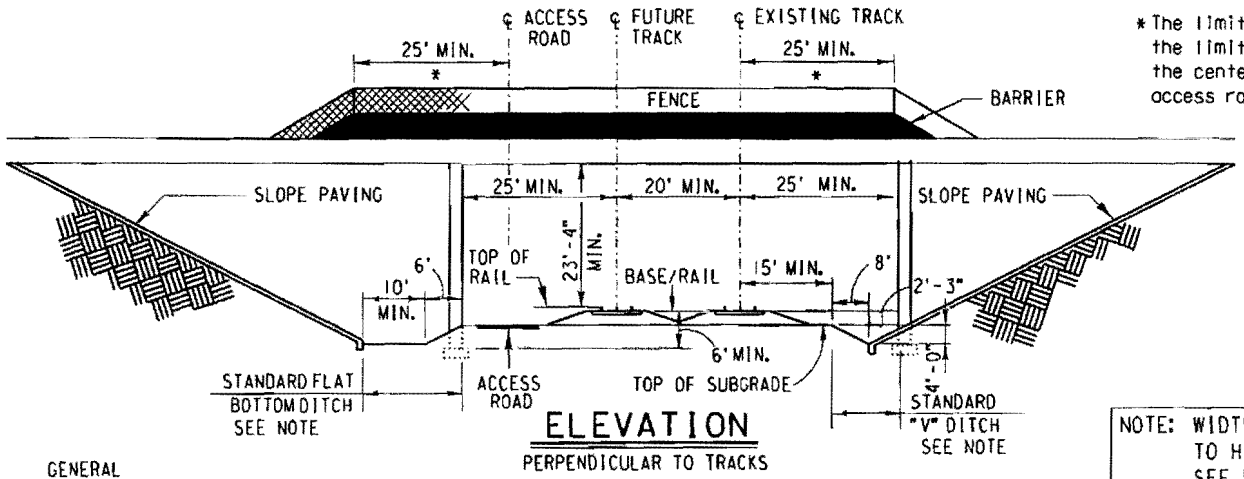

ELEVATION

PERPENDICULAR TO TRACKS

* The limits of the fence with barrier rail shall extend to the limits of Railroad Right-of-Way or a minimum of 25 ft. beyond the centerline of the outermost existing track, future track or access roadway, whichever is greater.

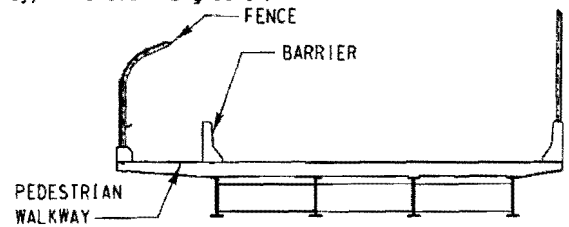

OVERHEAD STRUCTURE CROSS SECTION WITH FENCE

NOTE: WIDTH AND HEIGHT SUBJECT TO HYDRAULIC REQUIREMENTS. SEE PLAN NO. 711100, SHEET 5.

GENERAL

Fence shall be provided as indicated on the cross sections and elevation view on both sides of the Overhead Structure in ALL new or modified structures.

Barrier rail for Overhead Structures, without walkways, that may be subject to snow removal shall be a minimum of 42 inches in height with a 4 foot wide shoulder or 30 inches in height with a 6 foot wide shoulder. See Plan No. 711100, Sheet 4.

Lights are to be installed on the underside of the Overhead Structure where shadows cast by the structure would interfere with Railroad operations.

Slope paving shall be provided where end slopes are equal to or exceed 2 horizontal to 1 vertical.

Falsework for construction of overhead structures shall comply with Railroad Requirements.

Demolition of existing Overhead Structures shall comply with Railroad Demolition Requirements. Temporary shoring shall be designed in accordance with Railroad Guidelines for Temporary Shoring.

Applicant shall be responsible for identification, location and protection of existing utilities.

Call the following numbers at least 48 hours prior to commencing work to determine location of fiber optics:
UPRR "Call Before You Dig", 1-800-336-9193
BNSF "Call Before You Dig", 1-800-533-2891.

CLEARANCES

Minimum vertical clearance shall be 23'-4" above the top of high rail within 25' of centerline of track. Additional clearance may be required for construction purposes or if sag of vertical curve must be adjusted or if future track raise for flood considerations or maintenance is probable.

Minimum horizontal clearances, measured at right angle from centerline of track, shall be as shown in elevation view.

For minimum construction clearances, see Plan No. 711100, Sheet 3.

PIERS

Piers shall be located outside Railroad Right-of-Way.

Pier protection walls shall be provided in accordance with AREMA Chapter 8, Part 2.1.5 for piers within 25 feet of the centerline of track.

Top of footings located within 25 feet from centerline of track shall be a minimum of 6 feet below base of rail and a minimum of 1 foot below flowline of ditch.

DRAINAGE

Drainage from the Overhead Structure shall be diverted away from and not discharged onto the tracks, roadbed and Railroad Right-of-Way.

At minimum, a standard "V"-shaped or flat-bottom ditch shall be provided on each side of the tracks as necessary.

Culverts may be installed in lieu of standard Railroad ditches when approved by Railroad Central Engineering. Maintenance of culverts will be at Applicant's expense.

FUTURE TRACKS AND ACCESS ROAD

Space is to be provided for one or more future tracks as required for long range planning or other operating requirements. Where provision is made for more than two tracks, space is to be provided for an access road on both sides of tracks.

REVISIONS		
DATE	LTR.	DESCRIPTION
/		
/		
/		
/		
/		
/		

DESIGN BY: RAF | DRAWN BY: KDM | CHECKED BY: KHJ

APPROVED:

K.H. Jennison
BNSF - ASSISTANT DIRECTOR STRUCTURES DESIGN

George J. Meyer
UPRR - MGR SPECIAL PROJECTS STRUCTURES DESIGN

BNSF RAILWAY | UNION PACIFIC

BRIDGE STANDARDS

GRADE SEPARATION GUIDELINES (OVERHEADS)

GENERAL OVERHEAD STRUCTURE DRAWING

FILE OWNER: UPRR | DATE: 1/24/07
PLAN NO.: 711100 | SHEET: 1

PLOTTED: 3/30/2007 2:53:46 PM

FILE NAME: P:\ustation\dgn\std\pp_guidelines.dgn

PLAN

1. North Arrow
2. Centerline of bridge and/or centerline of project.
3. Track layout and limits of Railroad right-of-way with respect to centerline of main lines.
4. Footprint of proposed superstructure and substructure including existing structure if applicable.
5. Show and label future tracks, access roadways and existing tracks as main line, siding, spur, etc.
6. Indicate point of minumum vertical clearance and distance, measured perpendicular, from the centerline of nearest track.
7. Horizontal clearance at right angle from centerline of nearest existing or future track to the face of obstruction such as substructure above grade.
8. Horizontal clearance at right angle from centerline of nearest existing or future track to the face of nearest foundation below grade.
9. Indicate horizontal spacing at right angle between centerlines of existing and/or future tracks.
10. Limits of shoring and minimum distance at right angle from centerline of nearest track.
11. Locate and show all existing facilities and utilities and their proposed relocation, if required.
12. Toe of slope and/or limits of retaining wall.
13. Existing and proposed contours.
14. Limits of barrier rail and fence.
15. Indicate minimum structure separation for adjacent structures.
16. Indicate Railroad Milepost and direction of increasing Milepost.
17. Direction of flow for all drainage systems within project limits.
18. Timetable direction arrows, nearest Railroad station and end station of Railroad Subdivision.

ELEVATION

1. Individual span length and total bridge length.
2. Limits of barrier rail and fence with respect to centerline of track.
3. Depth of foundation below bottom of tie.
4. Horizontal clearance at right angle from centerline of nearest existing or future track to the face of obstruction such as substructure above grade.
5. Indicate horizontal spacing at right angle between centerlines of existing and/or future tracks.
6. Minimum horizontal clearance at right angle from centerline of nearest existing or future track to the face of foundation below grade.
7. Indicate top and bottom of pier protection wall elevation relative to top of rail elevation.
8. Controlling dimensions of drainage ditches and/or drainage structures.
9. Top of rail elevations for all tracks.
10. Minimum permanent vertical clearance above top of high rail to the lowest point under the bridge.
11. Existing and proposed goundline & roadway profile.
12. Show elevation of existing or relocated utilities.
13. Show slope and specify type of slope paving. Toe of slope shall be shown relative to drainage ditch and top of subgrade.
14. Show and label future tracks, access roads and existing tracks as main line, siding spur, etc.
15. Show location of deck joints.
16. Location of deck drains.

TYPICAL SECTION

1. Total width of superstructure.
2. Width of shoulder and/or sidewalk.
3. Type of barrier rail, fence and their heights.
4. Depth of superstructure.

TITLE BLOCK

1. The name & logo of engineering firm or project owner.
2. Drawing title.
3. Railroad milepost number and subdivision.
4. City, county and state.
5. Project name and location.
6. Date.
7. Latitude and longitude.

RAILROAD PROFILE GRADE DIAGRAM

1. Show existing and proposed track profile at the bridge location and a minimum of 1,000 feet past each edge of the bridge.

Note: The Railroad Milepost is calculated at the intersection of centerlines of the Overhead Structure and Existing Track. All separate Overhead Structures shall have individual Milepost designations.

REVISIONS		
DATE	LTR.	DESCRIPTION
/		
/		
/		
/		
/		
/		

DESIGN BY: RAF | DRAWN BY: MMD | CHECKED BY: KHJ

APPROVED:

K.H. Jennison

BNSF - ASSISTANT DIRECTOR STRUCTURES DESIGN

George J. Meyer

UPRR - MGR SPECIAL PROJECTS STRUCTURES DESIGN

BNSF RAILWAY

UNION PACIFIC

BRIDGE STANDARDS

GRADE SEPARATION GUIDELINES (OVERHEADS)

MINIMUM LAYOUT REQUIREMENTS FOR OVERHEAD STRUCTURES

FILE OWNER: UPRR | DATE: 1/24/07

PLAN NO.: 711100 | SHEET: 2

PLOTTED: 3/30/2007 2:53:57 PM

FILE NAME: P:\ustation\dgn\std\ap_guidelines.dgn

CONSTRUCTION NOTES:

1. Any shoring system that impacts the Railroad's operation and/or supports the Railroad's embankment shall be designed and constructed per Railroad Guidelines for Temporary Shoring.
2. All demolition within the Railroad's right-of-way and/or demolition that may impact the Railroad's tracks or operations shall comply with the Railroad's Demolition requirements.
3. Erection over the Railroad's track shall be planned such that it enables the track(s) to remain open to traffic per Railroad requirements.
4. The elevation of the existing top-of-rail profile shall be verified before beginning construction. All discrepancies shall be brought to the attention of the Railroad prior to construction.
5. The proposed grade separation project shall not change the quantity and/or characteristics of the flow in the Railroad ditches and/or drainage structures.
6. The contractor must submit a proposed method of erosion and sediment control and have the method approved by the Railroad prior to beginning any grading on the project site.
7. For Railroad coordination please refer to the Railroad's Coordination Requirements as part of the Specifications or Special Provisions of the project.
8. Temporary Construction Clearances, including falsework clearances, shall comply with Figure 1.
9. All permanent clearances shall be verified before project closeout.

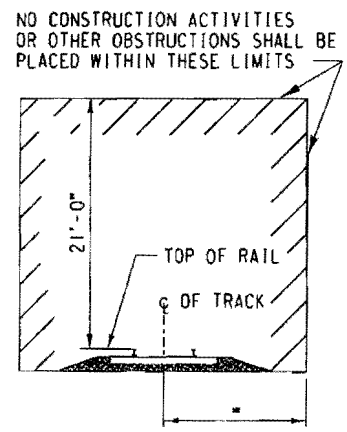

MINIMUM CONSTRUCTION CLEARANCE ENVELOPE

(NORMAL TO RAILROAD)

FIGURE 1

* 15'-0" for BNSF and 12'-0" for UPRR

REVISIONS		
DATE	LTR.	DESCRIPTION
/		
/		
/		
/		
/		
/		

DESIGN BY: RAF | DRAWN BY: KDM | CHECKED BY: KHJ

APPROVED:

K.H. Jennison

BNSF - ASSISTANT DIRECTOR STRUCTURES DESIGN

George J. Meyer

UPRR - MGR SPECIAL PROJECTS STRUCTURES DESIGN

BNSF RAILWAY | UNION PACIFIC

BRIDGE STANDARDS

GRADE SEPARATION GUIDELINES (OVERHEADS)

CONSTRUCTION NOTES

FILE OWNER: UPRR | DATE: 1/24/07

PLAN NO.: 711100 | SHEET: 3

PLOTTED: 3/30/2007 2:54:07 PM

FILE NAME: P:\ustation\dgn\std\pp_guidelines.dgn

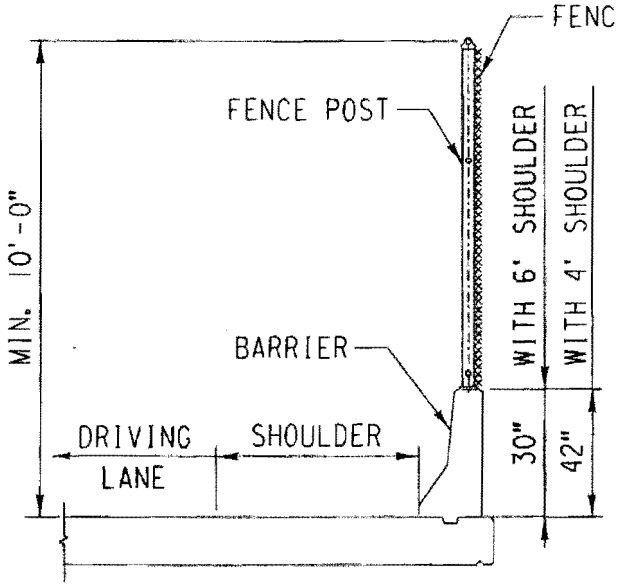

FENCE ON BARRIER

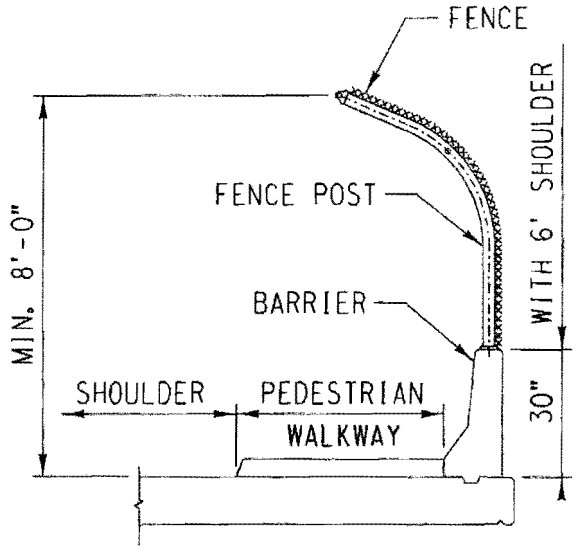

WALKWAY FENCE ON BARRIER

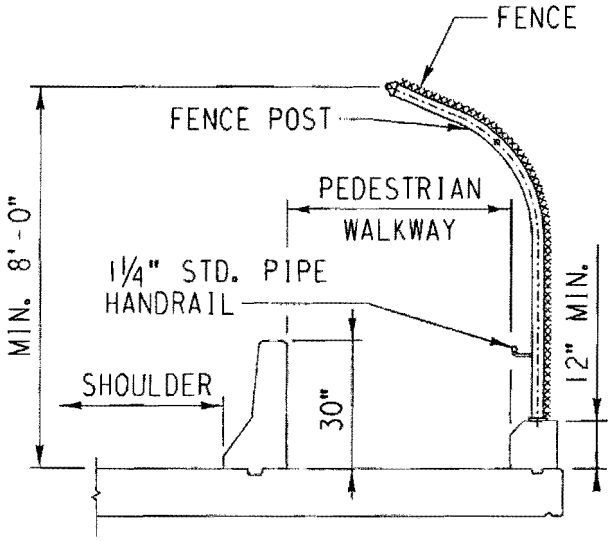

WALKWAY FENCE ON CURB WITH BARRIER

REVISIONS		
DATE	LTR.	DESCRIPTION
/		
/		
/		
/		
/		
/		

DESIGN BY: RAF | DRAWN BY: MMD | CHECKED BY: KHJ

APPROVED:

K.H. Jennison

BNSF - ASSISTANT DIRECTOR STRUCTURES DESIGN

George J. Meyn

UPRR - MGR SPECIAL PROJECTS STRUCTURES DESIGN

BNSF RAILWAY

UNION PACIFIC

BRIDGE STANDARDS

GRADE SEPARATION GUIDELINES (OVERHEADS)

OVERHEAD STRUCTURE BARRIERS AND FENCES

FILE OWNER: UPRR	DATE: 1/24/07
PLAN NO.: 711100	SHEET: 4

PLOTTED: 3/30/2007 2:54:17 PM

FILE NAME: P:\ustation\dgn\std\gp_guidelines.dgn

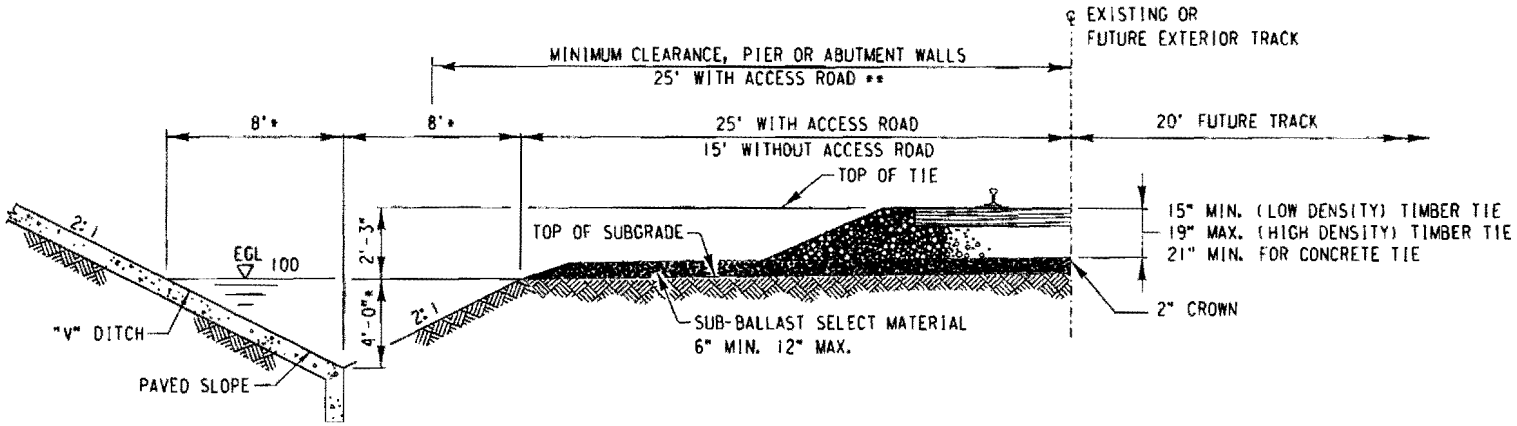

TYP. SECTION AT ABUTMENT SLOPES WITH STD. "V" DITCH

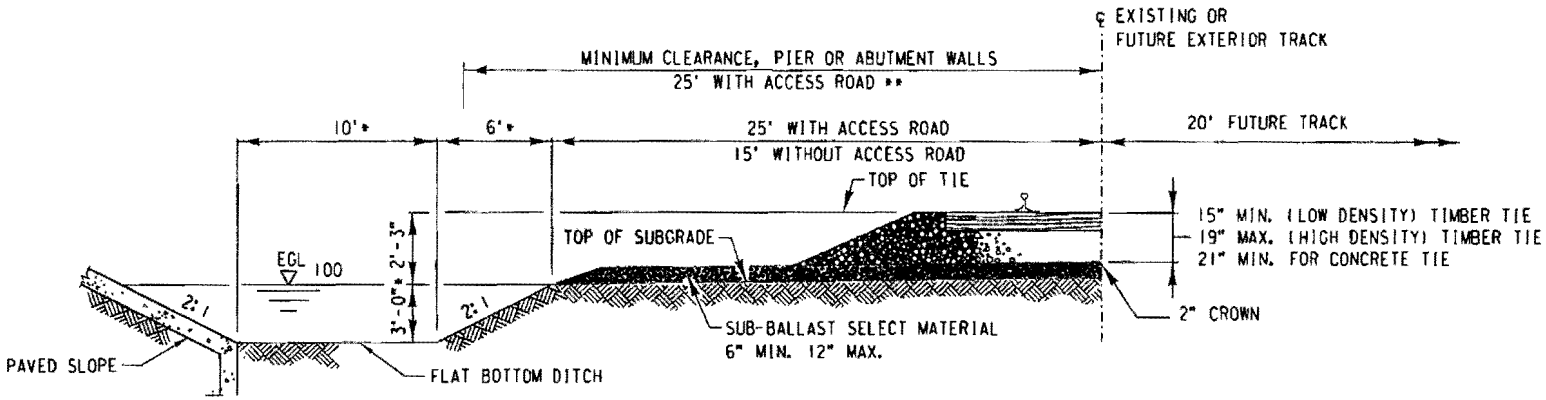

TYP. SECTION AT ABUTMENT SLOPES WITH STD. FLAT BOTTOM DITCH

NOTE:

MINIMUM DITCH SIZES ARE SHOWN. DITCH SIZE TO BE INCREASED AS REQUIRED BASED ON RR HYDRAULIC CRITERIA.

* WIDTH AND HEIGHT SUBJECT TO HYDRAULIC REQUIREMENTS.

** LOCATION OF PIER, BENT COLUMNS OR ABUTMENT WALLS SHOULD NOT INTERFERE WITH THE DRAINAGE IN THE AREA. IF MINIMUM STANDARD DITCHES ARE NOT PROVIDED IN THE LAYOUT, LONGITUDINAL CULVERTS SHALL BE PROVIDED THAT WILL HANDLE THE DRAINAGE AS REQUIRED BY THE HYDRAULIC STUDIES.

REVISIONS		
DATE	LTR.	DESCRIPTION
/		
/		
/		
/		
/		
/		

DESIGN BY: RAF | DRAWN BY: FJS | CHECKED BY: KHJ

APPROVED:

K.H. Jennison

BNSF - ASSISTANT DIRECTOR STRUCTURES DESIGN

George J. Meyer

UPRR - MGR SPECIAL PROJECTS STRUCTURES DESIGN

BNSF RAILWAY

UNION PACIFIC

BRIDGE STANDARDS

GRADE SEPARATION GUIDELINES (OVERHEADS)

TYPICAL SECTIONS AT ABUTMENT SLOPES

FILE OWNER: UPRR | DATE: 1/24/07

PLAN NO.: 711100 | SHEET: 5

PLOTTED: 3/30/2007 2:54:27 PM

FILE NAME: P:\station\dgn\std\pp_guidelines.dgn

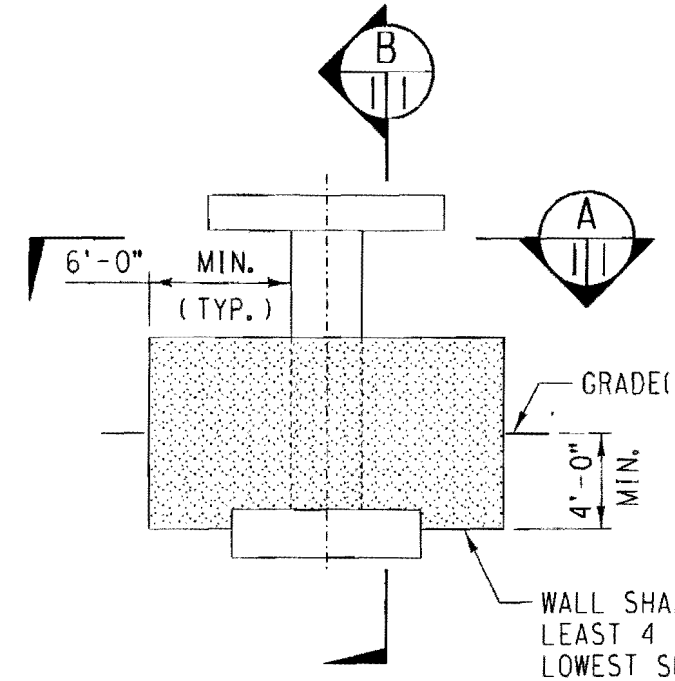

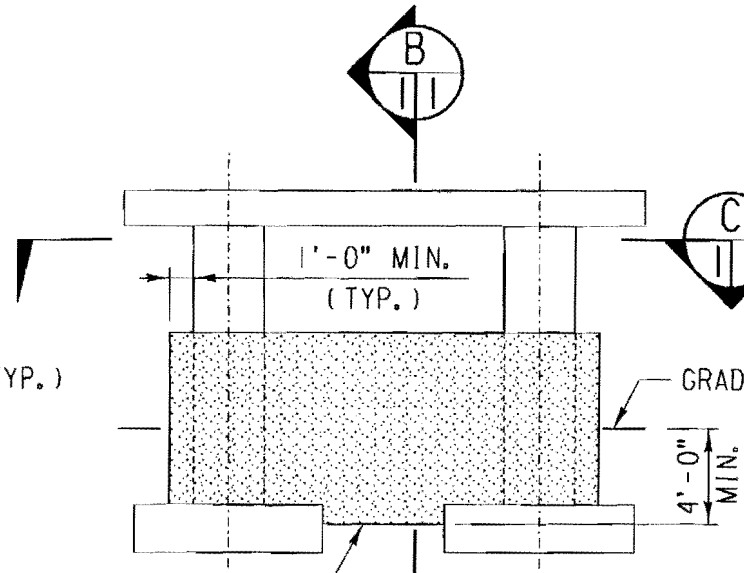

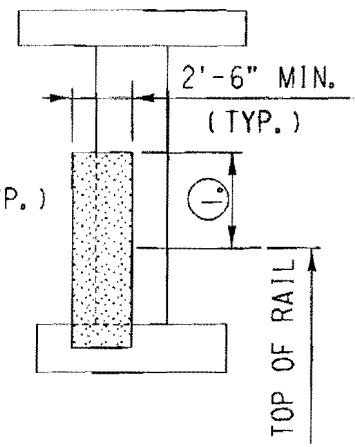

SECTION B

SCALE: 1/8"=1'-0"

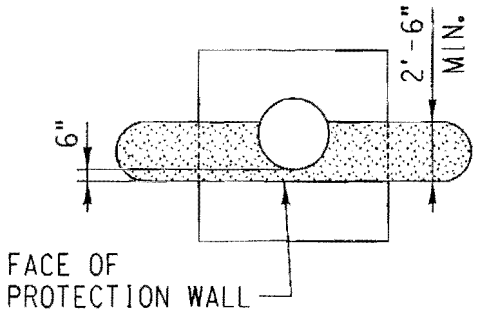

TRACK ON ONE SIDE OF COLUMNS. SINGLE COLUMN

SECTION A

SCALE: 1/8"=1'-0"

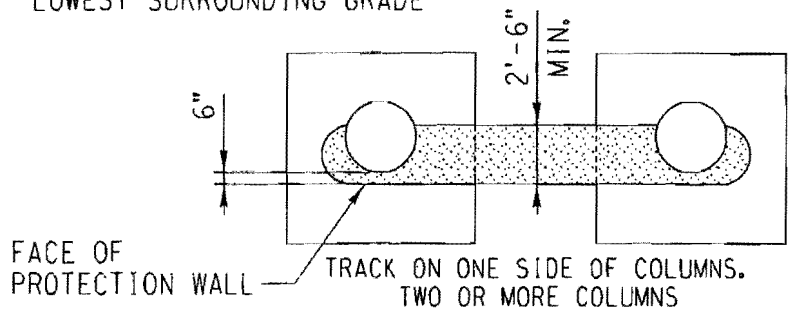

TRACK ON ONE SIDE OF COLUMNS. TWO OR MORE COLUMNS

SECTION C

SCALE: 1/8"=1'-0"

1. 6'-0" MINIMUM FOR PIERS FROM 12 FT. TO 25 FT. CLEAR FROM THE CENTERLINE OF TRACK. 12'-0" MINIMUM FOR PIERS LESS THAN 12 FT. CLEAR FROM THE CENTERLINE OF TRACK.

REVISIONS		
DATE	LTR.	DESCRIPTION
/		
/		
/		
/		
/		
/		

DESIGN BY: RAF | DRAWN BY: FJS | CHECKED BY: KHJ

APPROVED:

K.H. Jennison

BNSF - ASSISTANT DIRECTOR STRUCTURES DESIGN

George J. Meyer

UPRR - MGR SPECIAL PROJECTS STRUCTURES DESIGN

BNSF RAILWAY

UNION PACIFIC

BRIDGE STANDARDS

GRADE SEPARATION GUIDELINES (OVERHEADS)

STANDARDS FOR PIER PROTECTION WALLS

FILE OWNER: UPRR | DATE: 1/24/07

PLAN NO.: 711100 | SHEET: 8

PLOTTED: 3/30/2007 2:54:35 PM

FILE NAME: P:\station\dgn\sta\bp_guidelines.dgn