CSX TRANSPORTATION

500 Water St
13th Floor
Jacksonville, FL 32202
EMAIL Hal_Gibson@csx.com
PHONE (904) 359-1048
FAX (904) 366-4042

Hal A. Gibson, Jr.
Principal Engineer, Public Projects

July 7, 2009

Illinois Commerce Commission
Rod Bergeron
Railroad Division
527 East Capitol Ave.
Springfield, IL 62701

Subject: Rockdale, Will County, IL: Installation of flashing lights, gates and circuitry at US 6, DOT 608232Y, MP BIF 46.30, OP# IL0245, Docket # T08-0122, X-12767

Dear Mr. Bergeron:

Enclosed is a signed copy of the Form 2 and the as-installed plans for the subject project.

If you have any questions, or would like to discuss this project, please contact me.

Thank you,

Hal Gibson

Enclosures (Form 2 and Plans)

RECEIVED
JUL 07 2009
Illinois Commerce Commission
RAIL SAFETY SECTION

DOCKETED
JUL 28 2009

Read DOT

STATE OF ILLINOIS
Illinois Commerce Commission
Transportation Division

Form 2

Notice of completion of minor change in crossing protection under 92 Illinois Administrative Code 1535.400(c).

Date: **July 6, 2009**

To the Illinois Commerce Commission:

The **CSX Transportation, Inc.** hereby gives notice that on **July 4, 2009** it completed the making of a minor change at crossing Number **608232Y** in accordance with the notice proposing such change given to this Commission on **June 3, 2009 and authorized on June 11, 2009**.

CSX Transportation, Inc.

By _____

Hal A. Gibson, Jr.
Principal Engineeer, Public Projects
904 359-1048

Completion of this form is necessary to accomplish the statutory purpose as outlined in the Illinois Commercial Transportation Law, Section 18c-7401. This form has been approved by Forms Management Center.

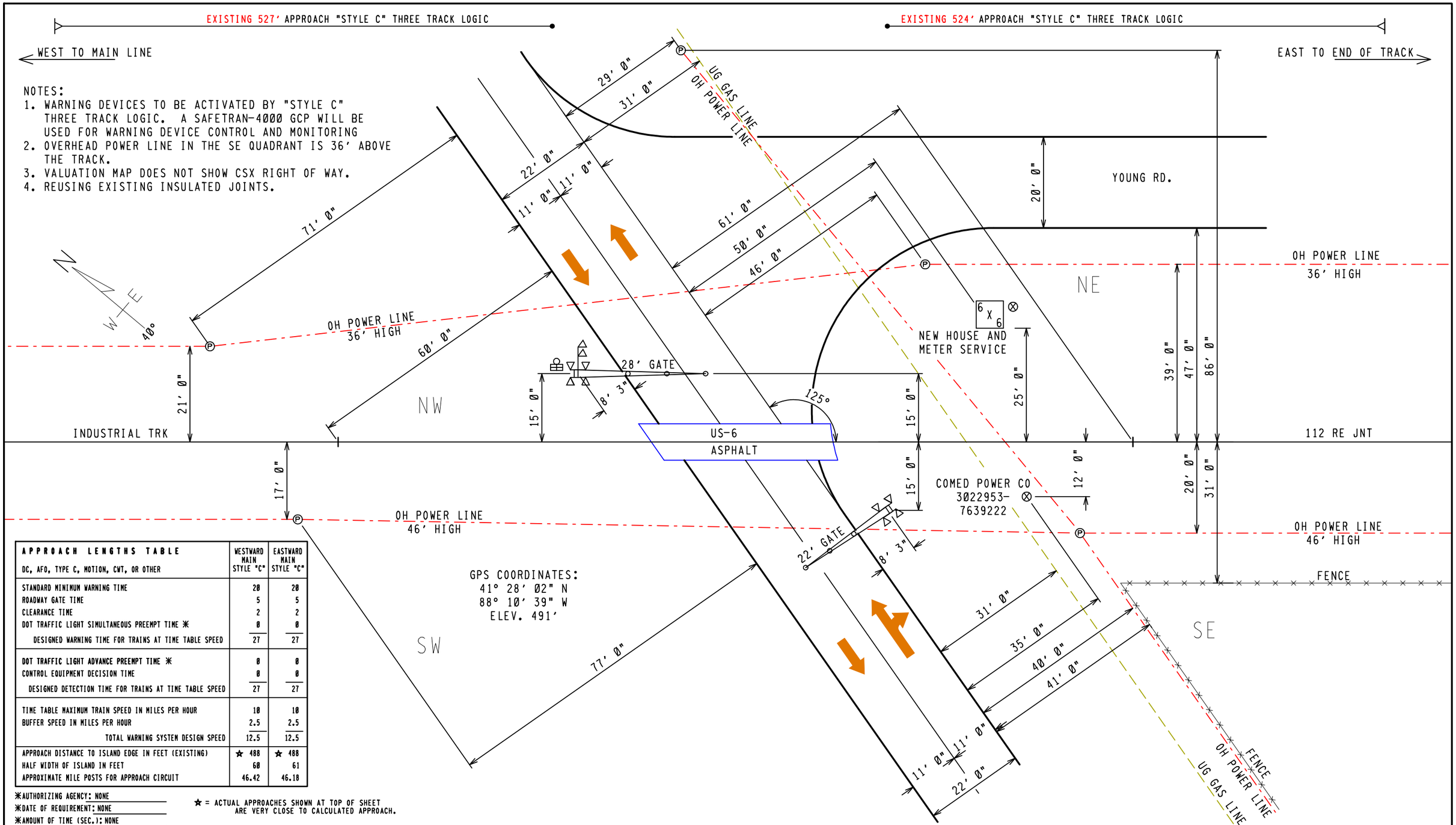

APPROACH LENGTHS TABLE DC, AFO, TYPE C, MOTION, CWT, OR OTHER	WESTWARD MAIN STYLE "C"	EASTWARD MAIN STYLE "C"
STANDARD MINIMUM WARNING TIME	20	20
ROADWAY GATE TIME	5	5
CLEARANCE TIME	2	2
DOT TRAFFIC LIGHT SIMULTANEOUS PREEMPT TIME ✳	0	0
DESIGNED WARNING TIME FOR TRAINS AT TIME TABLE SPEED	27	27
DOT TRAFFIC LIGHT ADVANCE PREEMPT TIME ✳	0	0
CONTROL EQUIPMENT DECISION TIME	0	0
DESIGNED DETECTION TIME FOR TRAINS AT TIME TABLE SPEED	27	27
TIME TABLE MAXIMUM TRAIN SPEED IN MILES PER HOUR	10	10
BUFFER SPEED IN MILES PER HOUR	2.5	2.5
TOTAL WARNING SYSTEM DESIGN SPEED	12.5	12.5
APPROACH DISTANCE TO ISLAND EDGE IN FEET (EXISTING)	★ 488	★ 488
HALF WIDTH OF ISLAND IN FEET	60	61
APPROXIMATE MILE POSTS FOR APPROACH CIRCUIT	46.42	46.18

✳AUTHORIZING AGENCY: NONE
✳DATE OF REQUIREMENT: NONE
✳AMOUNT OF TIME (SEC.): NONE

★ = ACTUAL APPROACHES SHOWN AT TOP OF SHEET ARE VERY CLOSE TO CALCULATED APPROACH.

FILE NAME: BIF04630.H01	REVISION DATES	PRODUCED FOR:	PRODUCED BY:	LEGEND	GUARD RAIL	METER SERVICE ⊗	STREET NAME: US-6
DATE DRAWN: 06-02-2008	06-16-08 MLS	CSX TRANSPORTATION	SAFETRAN systems	CSX ROW	O.H. POWER	POLE Ⓟ	CITY & STATE: ROCKDALE, IL
DRAWN BY: GARY CARLEE	09-15-08 MLS	RAIL TRANSPORT GROUP ENGINEERING	7775 BAYMEADOWS WAY	R/R POLELINE	FENCE	FIRE PLUG Ⓕ	PROJECT #: IL2008014
CHECKED BY: ERNESTO PROSPERO	- -	COMMUNICATIONS AND SIGNALS	SUITE 250	GAS	WATER	SEWER CAP Ⓢ	OP #: IL0245
SSC #: JXXD00633	- -		JACKSONVILLE, FL 32256	FIBER OPTIC	SEWER	GAS VENT Ⓥ	DOT #: 608232Y

PROPOSED CROSSING LAYOUT
SCALE: 1" = 20'

INDEX

CONTENTS

SH. NO.		REVISION NO. 1	2	3	4	5	6	7	8	9
I01	INDEX AND REVISIONS	╱								
S01	TRACK AND SIGNAL PLAN	╱								
P01	MINIMUM PROGRAM STEPS REPORT CWE-30	╱								
E01	POWER DISTRIBUTION	╱								
C01	DETECTION DEVICE CONSIST CWE-30	╱								
C02	DETECTION CIRCUITRY CWE-30	╱								
C03	DETECTION CIRCUITRY CWE-30	╱								
C04	CROSSING WARNING DEVICE GATE CIRCUITRY	╱								
C05	CROSSING WARNING DEVICE LIGHT CIRCUITRY	╱								
C06	CROSSING WARNING DEVICE CIRCUITRY	╱								
C07	SEAR II1 CONFIGURATION & FUNCTIONS	╱								
C08	STYLE C CIRCUITS	╱								

╱ = PLANS SENT TO FIELD (DISTRIBUTED)

╳ = PLANS AS-IN-SERVICED (UP TO DATE)

REVISIONS

REV. NO.	PROJECT NO.	DESIGN DATE	IN SERVICE DATE	REVISION DATE
1	IL2008014	06-16-08		

TO BE COMPLETED ON A.I.S.

NEW WORK

SAFETRAN systems

PROJECT #: IL2008014
DES/CHKD BY: MLS/SWS
DATE: 06-16-08

= NOTE

4K.I01
REV. 02-29-08

CSX TRANSPORTATION
RAIL TRANSPORT GROUP ENGINEERING
COMMUNICATIONS AND SIGNALS

AMOCO INDUSTRIAL LEAD

US-6 608232Y

INDEX AND REVISIONS

ROCKDALE, IL M.P. BIF-46.30

DESIGNED	DIGITIZED	CHECKED	DATE
SAF/MLS	SAF/MLS	SAF/SWS	06-16-08

DESIGN DATE	REV. NO.	DRAWING	SHEET NO	FILE	SHEET
06-16-08	1	-----	-----	BIF04630	I01

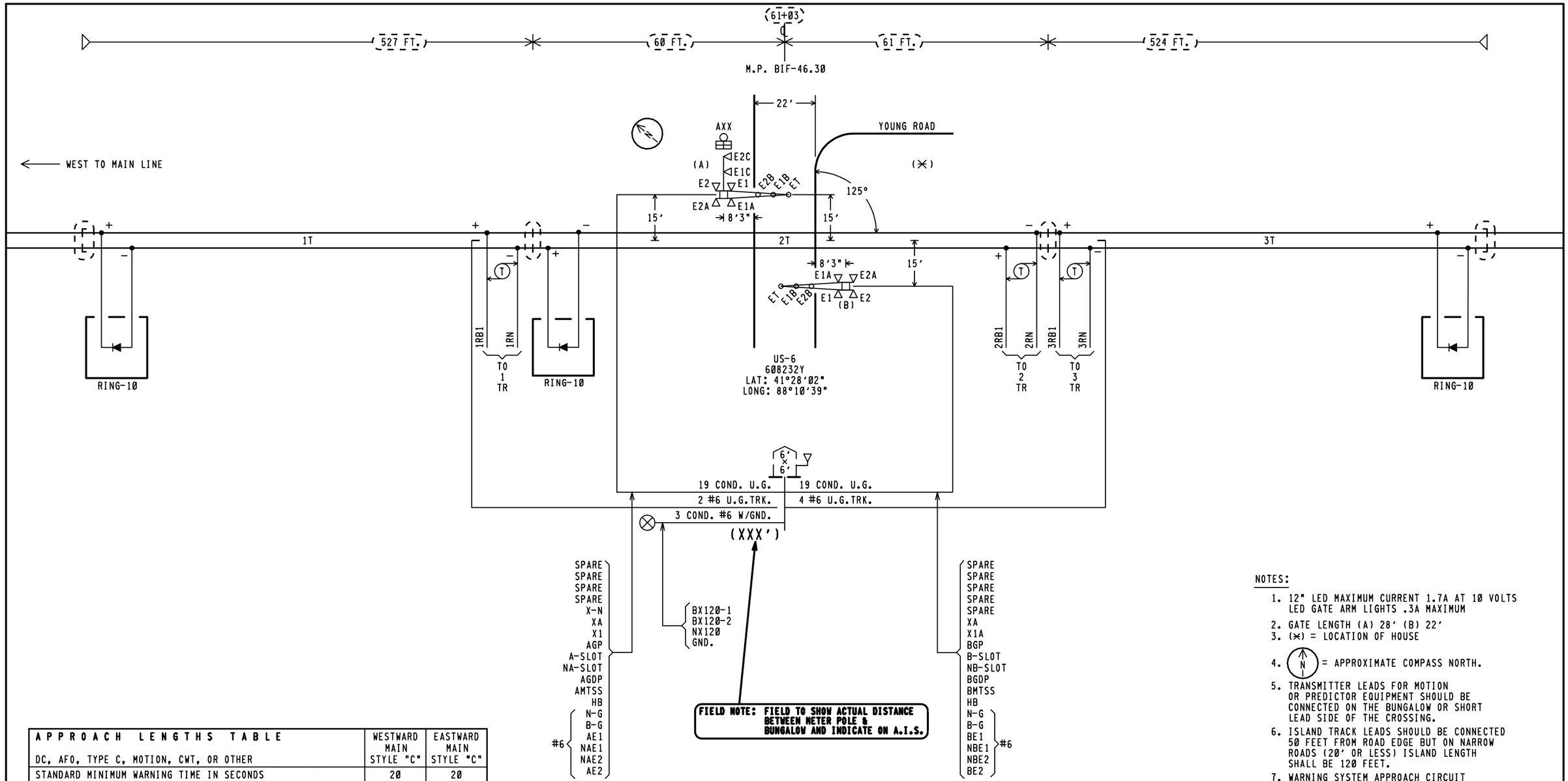

NOTES:

1. 12" LED MAXIMUM CURRENT 1.7A AT 10 VOLTS LED GATE ARM LIGHTS .3A MAXIMUM
2. GATE LENGTH (A) 28' (B) 22'
3. (✕) = LOCATION OF HOUSE
4. (N) = APPROXIMATE COMPASS NORTH.
5. TRANSMITTER LEADS FOR MOTION OR PREDICTOR EQUIPMENT SHOULD BE CONNECTED ON THE BUNGALOW OR SHORT LEAD SIDE OF THE CROSSING.
6. ISLAND TRACK LEADS SHOULD BE CONNECTED 50 FEET FROM ROAD EDGE BUT ON NARROW ROADS (20' OR LESS) ISLAND LENGTH SHALL BE 120 FEET.
7. WARNING SYSTEM APPROACH CIRCUIT DISTANCES ARE TO BE MEASURED FROM THE ISLAND TRACK CONNECTIONS.

APPROACH LENGTHS TABLE DC, AFO, TYPE C, MOTION, CWT, OR OTHER	WESTWARD MAIN STYLE "C"	EASTWARD MAIN STYLE "C"
STANDARD MINIMUM WARNING TIME IN SECONDS	20	20
ROADWAY GATE TIME IN SECONDS	5	5
CLEARANCE TIME IN SECONDS	2	2
DOT TRAFFIC LIGHT SIMULTANEOUS PREEMPT TIME IN SECONDS✳	0	0
DESIGNED WARNING TIME FOR TRAINS AT TIME TABLE SPEED	27 SEC.	27 SEC.
DOT TRAFFIC LIGHT ADVANCE PREEMPT TIME IN SECONDS ✳	0	0
CONTROL EQUIPMENT DECISION TIME IN SECONDS	0	0
DESIGNED DETECTION TIME FOR TRAINS AT TIME TABLE SPEED	27 SEC.	27 SEC.
TIME TABLE MAXIMUM TRAIN SPEED IN MILES PER HOUR	10	10
BUFFER SPEED IN MILES PER HOUR	2.5	2.5
TOTAL WARNING SYSTEM DESIGN SPEED IN MILES PER HOUR	12.5	12.5
APPROACH DISTANCE TO ISLAND EDGE IN FEET	☆ 488	☆ 488
HALF WIDTH OF ISLAND IN FEET	60	61
APPROXIMATE MILE POSTS FOR APPROACH CIRCUIT	46.42	46.18

✳AUTHORIZING AGENCY: NONE
✳DATE OF REQUIREMENT: NONE
✳AMOUNT OF TIME (SEC.): NONE

☆ = ACTUAL APPROACHES SHOWN AT TOP OF SHEET ARE VERY CLOSE TO CALCULATED APPROACH.

NEW WORK EXCEPT
(- - -) = EXISTING

SAFETRAN systems

PROJECT #: IL2008014
DES/CHKD BY: MLS/SWS
DATE: 06-16-08

(⬭) = NOTE

4K.S01
REV. 12-22-06

CSX TRANSPORTATION
RAIL TRANSPORT GROUP ENGINEERING
COMMUNICATIONS AND SIGNALS

AMOCO INDUSTRIAL LEAD
US-6 608232Y
TRACK AND SIGNAL PLAN
ROCKDALE, IL M.P. BIF-46.30

DESIGNED	DIGITIZED	CHECKED	DATE
SAF/MLS	SAF/MLS	SAF/SWS	06-16-08

DESIGN DATE	REV. NO.	DRAWING	SHEET NO	FILE	SHEET
06-16-08	1	-----	-----	BIF04630	S01

TOP ROW

ACR			X-B POKR			MCR			1TR			2TR			3TR			1SR			3SR		
12	B	B77	9	11 F	N66	9 F	11	N41	12 FB		B51	12 F		B51	12 FB		B51	12 B		B8	12 B		B8
15		C30	10 F	12	C48	10	12	C48	15		C30	15		C30	15		C30	15		C30	15		C30
22	B		OB POKR			B-G POKR		C49	22			22 B			22			22 B			22 B		
25			9	11 F	N66	9 F	11 F		23 F			23 F			23 F			23 F			23 F		
32	B		10 F	12	C48	10 F	12	N66	25 F			25 F			25 F			25 F			25 F		
35								C48	32			32			32			32			32		
									35			35 B			35			35			35		

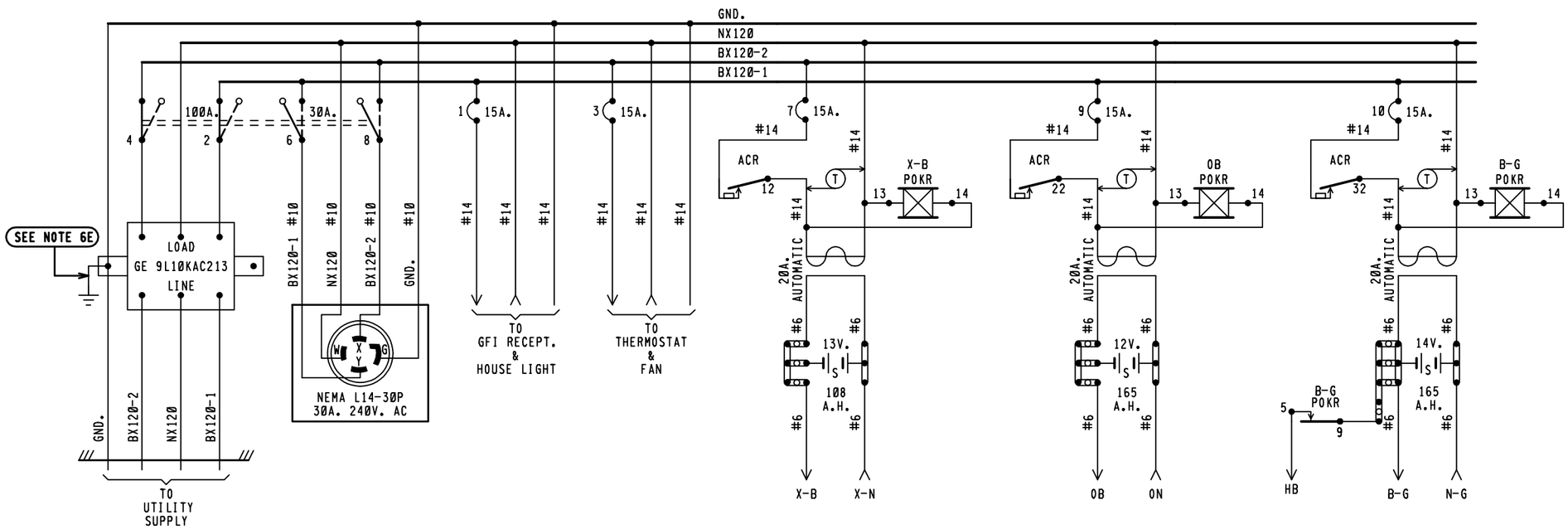

BX120-1	BX120-2
16.0 AMPS	8.0 AMPS

MAXIMUM LOAD
CALCULATED PER SS360

NOTES:

1 - REFERENCES ARE PER SCMS-13.
2 - ARRESTERS ARE PER SS382.
3 - SHELF RELAY PLACEMENT ON CONSIST CHART HAS NO SIGNIFICANCE.
4 - PLUG-IN RELAYS ARE VIEWED FROM THE FRONT OF RACK.
5 - BATTERY A.H. CAPACITY SHOWN IS THE MINIMUM REQUIREMENT.
6 - WIRING
  A - FEED TO ALL BUSSES, LIGHT CIRCUITS,MOTOR CIRCUITS TO BE #10 FLEX.
  B - 120-VOLT FEED FROM ENTRANCE TO POWER BUSS TO BE #10 FLEX.
  C - ALL TRACK WIRES TO BE #10 FLEX.
  D - ALL OTHERS TO BE #16 FLEX UNLESS NOTED.
  E - GROUND WIRE NOT NECESSARY WHEN GE ARRESTER IS MOUNTED ON GROUND PLANE OR METAL ENCLOSURE AFFIXED DIRECTLY TO BUNGALOW METALLIC STRUCTURAL MEMBER.
7 - CIRCUIT INTERRUPTERS 2 & 4 ARE MECHANICALLY INTERLOCKED WITH CIRCUIT INTERRUPTERS 6 & 8.

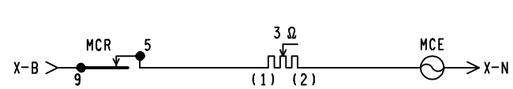

6'X 6' RELAY HOUSE W/FARADAY SHIELD

NEW WORK

SAFETRAN systems

PROJECT #: IL2008014
DES/CHKD BY: MLS/SWS
DATE: 06-16-08

= NOTE

4000GCP.E01
REV. 02-29-08

CSX TRANSPORTATION
RAIL TRANSPORT GROUP ENGINEERING
COMMUNICATIONS AND SIGNALS

AMOCO INDUSTRIAL LEAD
US-6 608232Y
POWER DISTRIBUTION
ROCKDALE, IL M.P. BIF-46.30

DESIGNED	DIGITIZED	CHECKED	DATE
SAF/MLS	SAF/MLS	SAF/SWS	06-16-08

DESIGN DATE	REV. NO.	DRAWING	SHEET NO	FILE	SHEET
06-16-08	1	-----	-----	BIF04630	E01

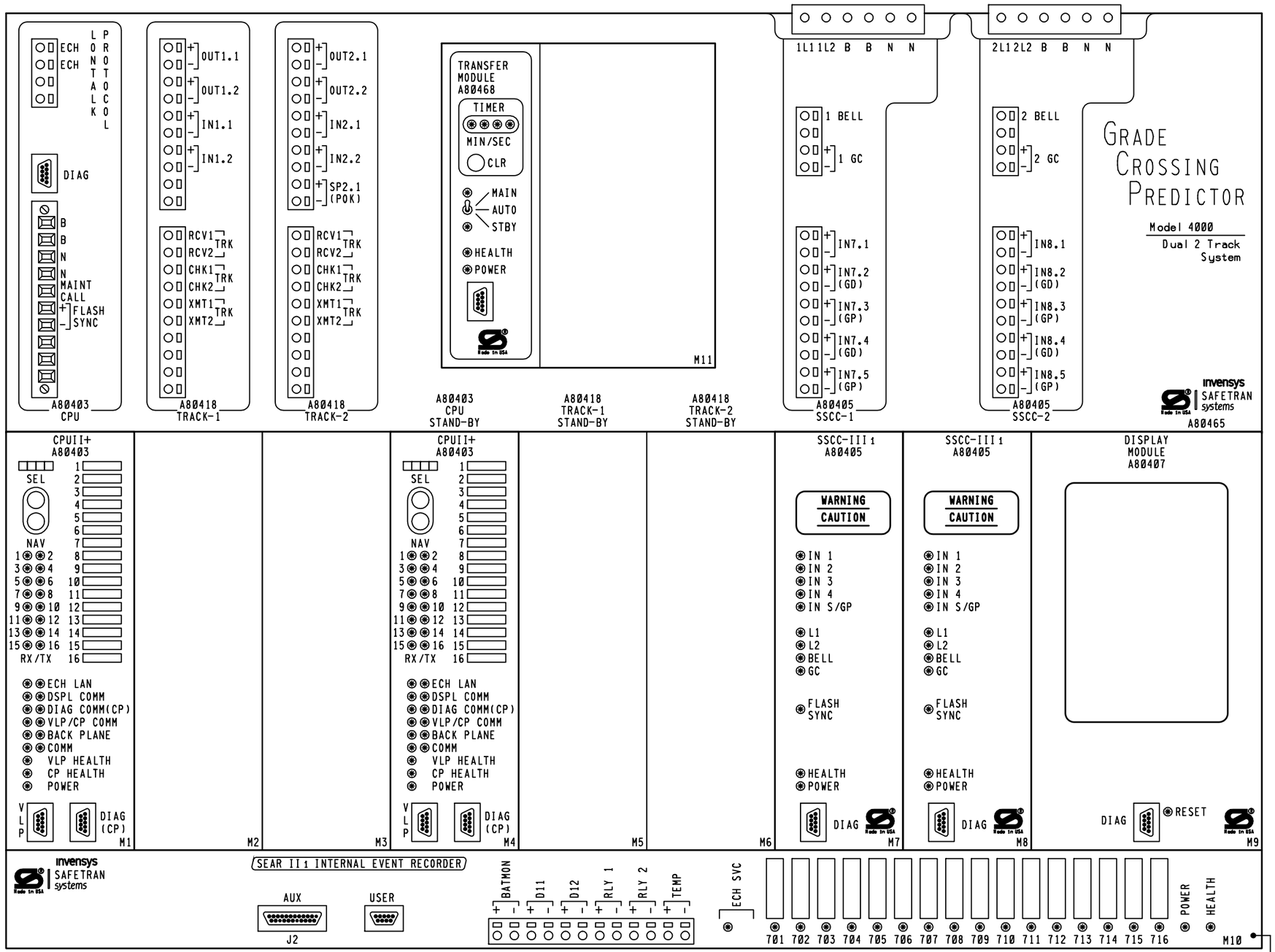

DIMENSIONS 23.25"W X 22.15"H X 12.38"D

GCP 4000 APPLICATION NOTES:

1. THE GRADE CROSSING PREDICTOR (GCP) IS A MODULAR MICROPROCESSOR CONTROLLED SYSTEM THAT IS DEPLOYED TO CONTINUALLY MONITOR THE APPROACHES TO RAILROAD GRADE CROSSINGS AND TO CONTROL THE LAMPS, GATES AND BELLS ASSOCIATED WITH THOSE CROSSINGS. WHEN EQUIPPED WITH THE SEAR II 1 MODULE THE GCP 4000 WILL RECORD EVENTS AND REPORT ALARMS WHEN CONNECTED TO AN OFFICE SYSTEM.

2. THE GCP 4000 GCP (A80465) IS A TWO TRACK REDUNDANT UNIT CAPABLE OF DRIVING 4 INDEPENDENT FLASHER AND GATE SIGNALS AND RECORDING EVENTS AND REPORTING ALARMS. THE STANDARD A80465 INCLUDES THE FOLLOWING MODULES:

SLOT	MODULE	FUNCTION	PART NO.
M1	CPU-II+	MAIN	A80403
M2	PANEL	NONE	D39325
M3	PANEL	NONE	D39325
M4	CPU-II+	STANDBY	A80403
M5	PANEL	NONE	D39325
M6	PANEL	NONE	D39325
M7	SSCC-III 1	A SIGNAL	A80405
M8	SSCC-III 1	B SIGNAL	A80405
M9	DISPLAY MODULE		A80407
TOP CENTER	TRANSFER UNIT		A80468
LOWER BAY	SEAR II 1	RECORDER	A80410
OPTIONAL MODULES:			A80413
RIO MODULE			

3. EACH TRACK MODULE HAS TWO PROGRAMMABLE INPUTS AND TWO PROGRAMMABLE OUTPUTS.

4. THE SEAR II 1 INTERNAL EVENT RECORDER HAS INPUTS FOR ONE BATTERY MONITOR, TWO NON-VITAL INPUTS AND TWO PROGRAMMABLE RELAY DRIVES (HEEL/FRONT).

5. LOCATED ON THE FRONT OF EACH MODULE THERE ARE LED LIGHTS TO INDICATE THE ACTIVITY OF CERTAIN FUNCTIONS OCCURRING INSIDE THE GCP.

6. BETWEEN SLOT 1 & 2 THERE IS A CHASSIS INDENTIFICATION CHIP (CIC) SOCKET AND AN ECD CONNECTOR (DB-25 FEMALE).

7. UPON THE FAILURE OF A MODULE IN SLOTS M1-M3 THE AUTOMATIC TRANSFER UNIT SWITCHES TO THE STANDBY MODULES IN SLOTS M4-M6.

NEW WORK

SAFETRAN systems

PROJECT #: IL2008014
DES/CHKD BY: MLS/SWS
DATE: 06-16-08

CSX TRANSPORTATION
RAIL TRANSPORT GROUP ENGINEERING
COMMUNICATIONS AND SIGNALS

AMOCO INDUSTRIAL LEAD
US-6 608232Y
DETECTION DEVICE CONSIST CWE-30
ROCKDALE, IL M.P. BIF-46.30

4K-CHASSIS.DGN
REV. 12-22-06

DESIGNED	DIGITIZED	CHECKED	DATE
SAF/MLS	SAF/MLS	SAF/SWS	06-16-08

DESIGN DATE	REV. NO.	DRAWING	SHEET NO	FILE	SHEET
06-16-08	1	-----	-----	BIF04630	C01

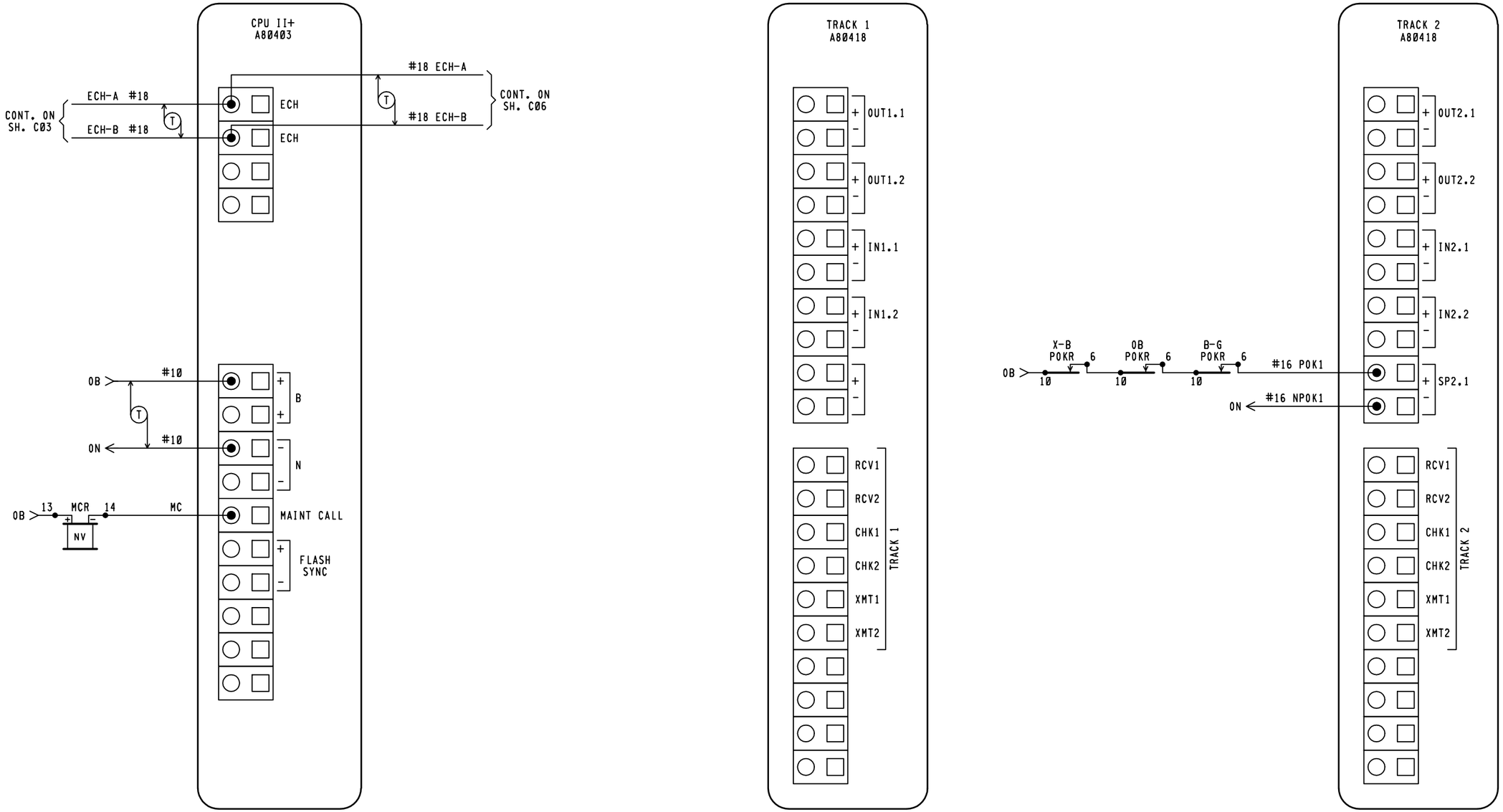

NOTE:

ECHELON CONNECTIONS NOT TO EXCEED 53' IN LENGTH AND TOTAL LENGTH COMBINED NOT TO EXCEED 430' WITH A MAXIMUM OF 8 NODES. RECOMMEND USE BELDEN WIRE CABLE #8461 OR EQUIVALENT.

NEW WORK

SAFETRAN systems

PROJECT #: IL2008014
DES/CHKD BY: MLS/SWS
DATE: 06-16-08

CSX TRANSPORTATION

RAIL TRANSPORT GROUP ENGINEERING
COMMUNICATIONS AND SIGNALS

AMOCO INDUSTRIAL LEAD

US-6 608232Y

DETECTION CIRCUITRY CWE-30

ROCKDALE, IL M.P. BIF-46.30

4K-TERMINALS.DGN
REV. 02-29-08

DESIGNED	DIGITIZED	CHECKED	DATE
SAF/MLS	SAF/MLS	SAF/SWS	06-16-08

DESIGN DATE	REV. NO.	DRAWING	SHEET NO	FILE	SHEET
06-16-08	1	-----	-----	BIF04630	C02

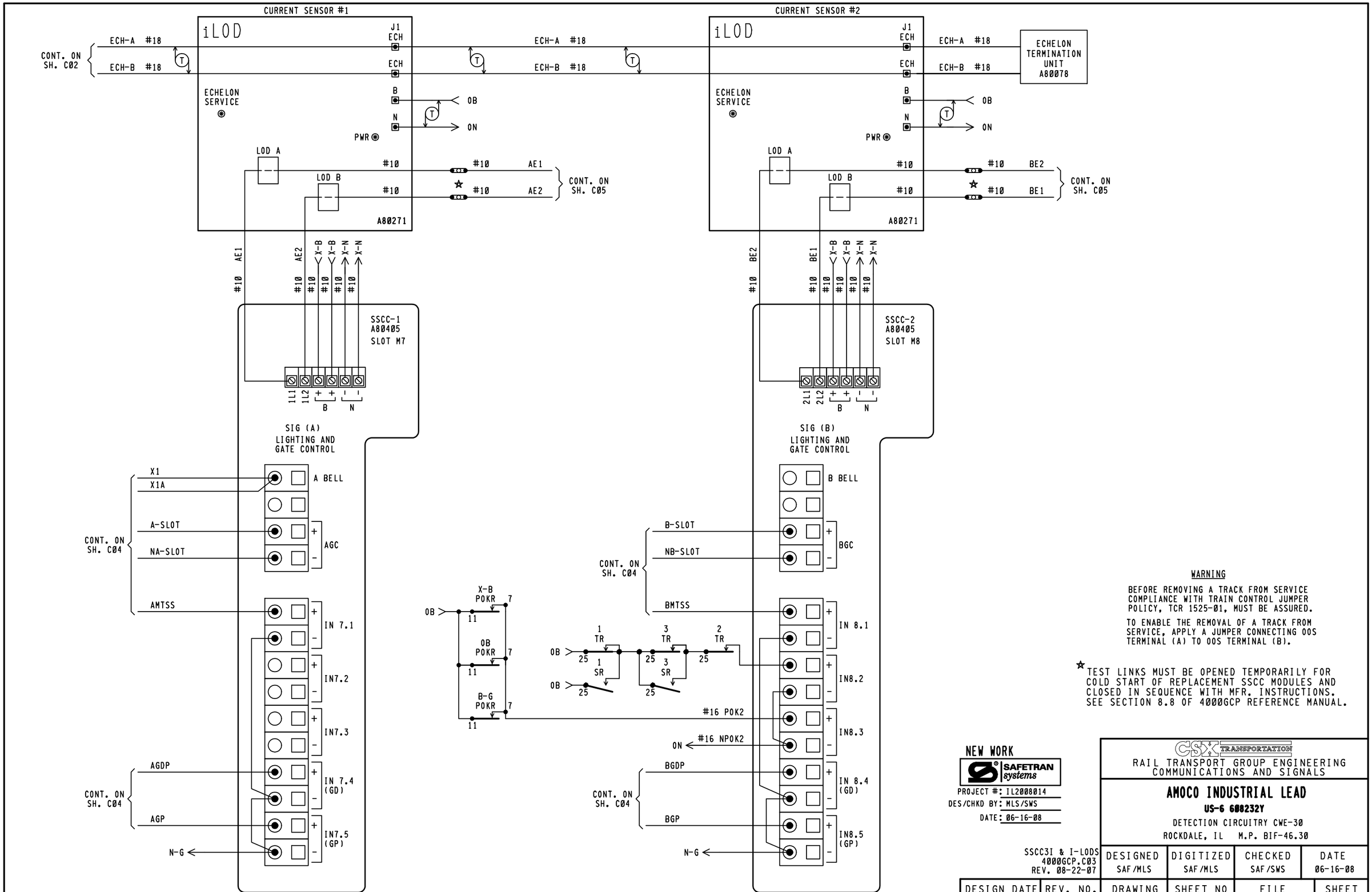

WARNING

BEFORE REMOVING A TRACK FROM SERVICE COMPLIANCE WITH TRAIN CONTROL JUMPER POLICY, TCR 1525-01, MUST BE ASSURED.

TO ENABLE THE REMOVAL OF A TRACK FROM SERVICE, APPLY A JUMPER CONNECTING 00S TERMINAL (A) TO 00S TERMINAL (B).

★ TEST LINKS MUST BE OPENED TEMPORARILY FOR COLD START OF REPLACEMENT SSCC MODULES AND CLOSED IN SEQUENCE WITH MFR. INSTRUCTIONS. SEE SECTION 8.8 OF 4000GCP REFERENCE MANUAL.

NEW WORK

SAFETRAN systems

PROJECT #: IL2008014
DES/CHKD BY: MLS/SWS
DATE: 06-16-08

CSX TRANSPORTATION
RAIL TRANSPORT GROUP ENGINEERING
COMMUNICATIONS AND SIGNALS

AMOCO INDUSTRIAL LEAD

US-6 608232Y

DETECTION CIRCUITRY CWE-30

ROCKDALE, IL M.P. BIF-46.30

SSCC3I & I-LODS
4000GCP.C03
REV. 08-22-07

DESIGNED	DIGITIZED	CHECKED	DATE
SAF/MLS	SAF/MLS	SAF/SWS	06-16-08

DESIGN DATE	REV. NO.	DRAWING	SHEET NO	FILE	SHEET
06-16-08	1	-----	-----	BIF04630	C03

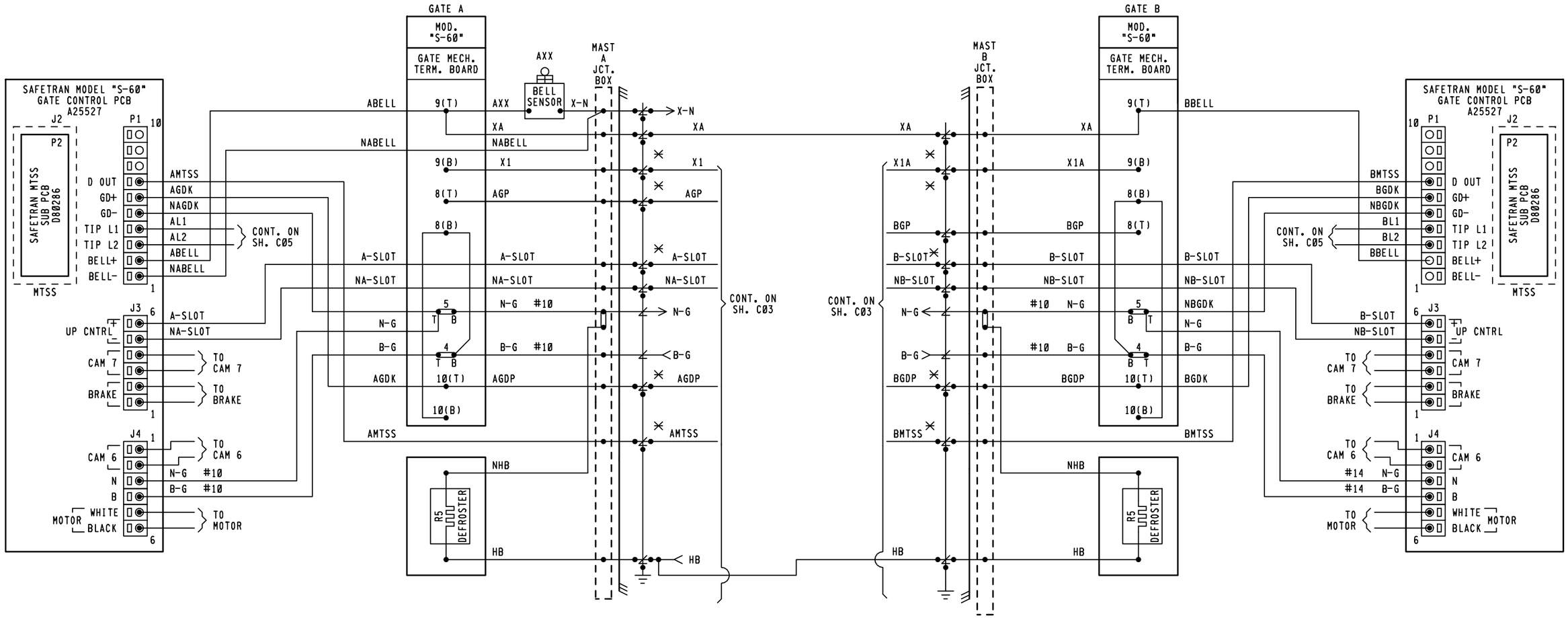

NOTES:
1. ✕ = TEST LINKS MUST BE OPEN TEMPORARILY FOR COLD START OF REPLACEMENT SSCC MODULES AND AND CLOSED IN SEQUENCE WITH MFR. INSTRUCTIONS. SEE SECTION 8.8 OF 4000GCP REFERENCE MANUAL.
2. = TERMINAL IN JCT. BOX BASE
3. ALL WIRING #16 UNLESS NOTED OTHERWISE.

NEW WORK

SAFETRAN systems

PROJECT #: IL2008014
DES/CHKD BY: MLS/SWS
DATE: 06-16-08

CSX TRANSPORTATION
RAIL TRANSPORT GROUP ENGINEERING
COMMUNICATIONS AND SIGNALS

AMOCO INDUSTRIAL LEAD
US-6 608232Y
CROSSING WARNING DEVICE GATE CIRCUITRY
ROCKDALE, IL M.P. BIF-46.30

S60 GATE WIRING.C04A
REV 09-05-07

DESIGNED	DIGITIZED	CHECKED	DATE
SAF/MLS	SAF/MLS	SAF/SWS	06-16-08

DESIGN DATE	REV. NO.	DRAWING	SHEET NO	FILE	SHEET
06-16-08	1	-----	-----	BIF04630	C04