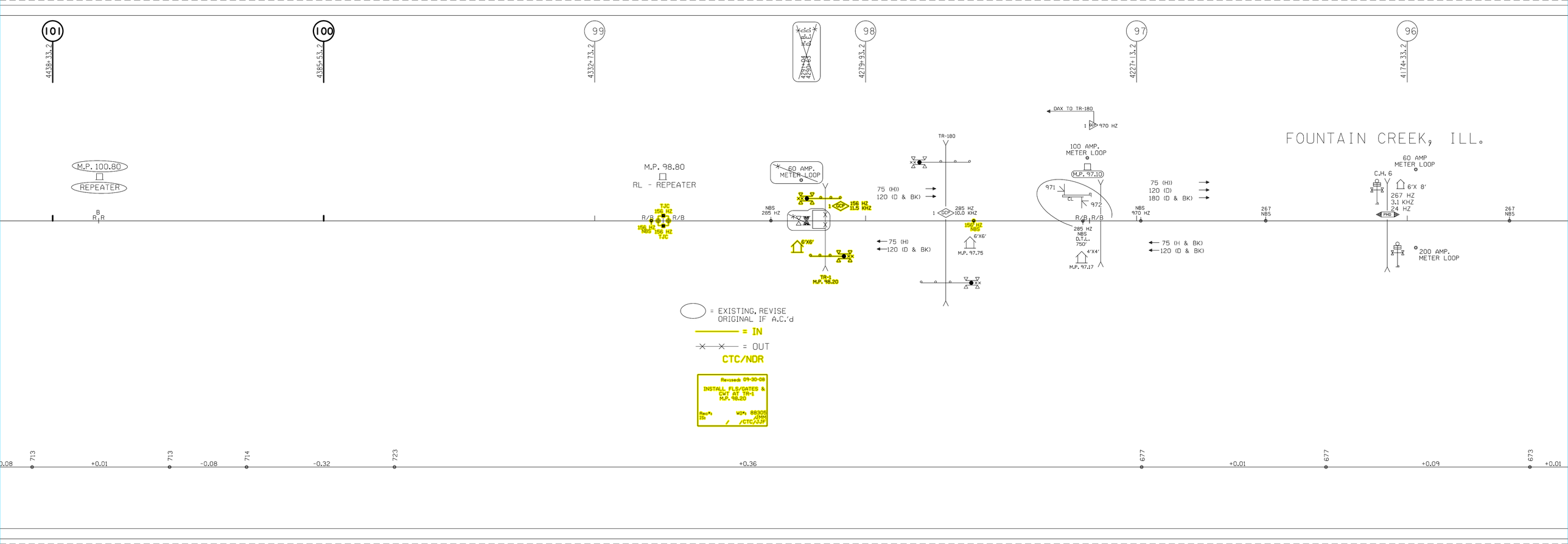

101
100
99
98
97
96
4438+33.2
4385+53.2
4332+73.2
4279+93.2
4227+13.2
4174+33.2
FOUNTAIN CREEK, ILL.
M.P. 100.80
REPEATER
M.P. 98.80
RL - REPEATER
60 AMP. METER LOOP
TR-180
DAX TO TR-180
970 HZ
100 AMP. METER LOOP
M.P. 97.10
60 AMP METER LOOP
C.H. 6
6'X 8'
267 HZ
3.1 KHZ
24 HZ
200 AMP. METER LOOP
75 (H))
120 (D & BK)
75 (H)
120 (D & BK)
75 (H & BK)
120 (D & BK)
NBS 285 HZ
NBS 970 HZ
267 NBS
TJC 156 HZ
156 HZ NBS
156 HZ TJC
156 HZ 11.5 KHZ
285 HZ 10.0 KHZ
6'X6'
M.P. 97.75
TR-1 M.P. 98.20
285 HZ NBS D.T.L. 750'
4'X4'
M.P. 97.17
= EXISTING, REVISE ORIGINAL IF A.C.'d
= IN
= OUT
CTC/NDR
Revised: 09-30-08
INSTALL FLS/GATES & CWT AT TR-1 M.P. 98.20
Rec#: 1S:
WO#: 88305 /JMM /CTC/JJF
713
+0.01
713
-0.08
714
-0.32
723
+0.36
677
+0.01
677
+0.09
673
+0.01

TO VILLA GROVE

TO 81ST STREET

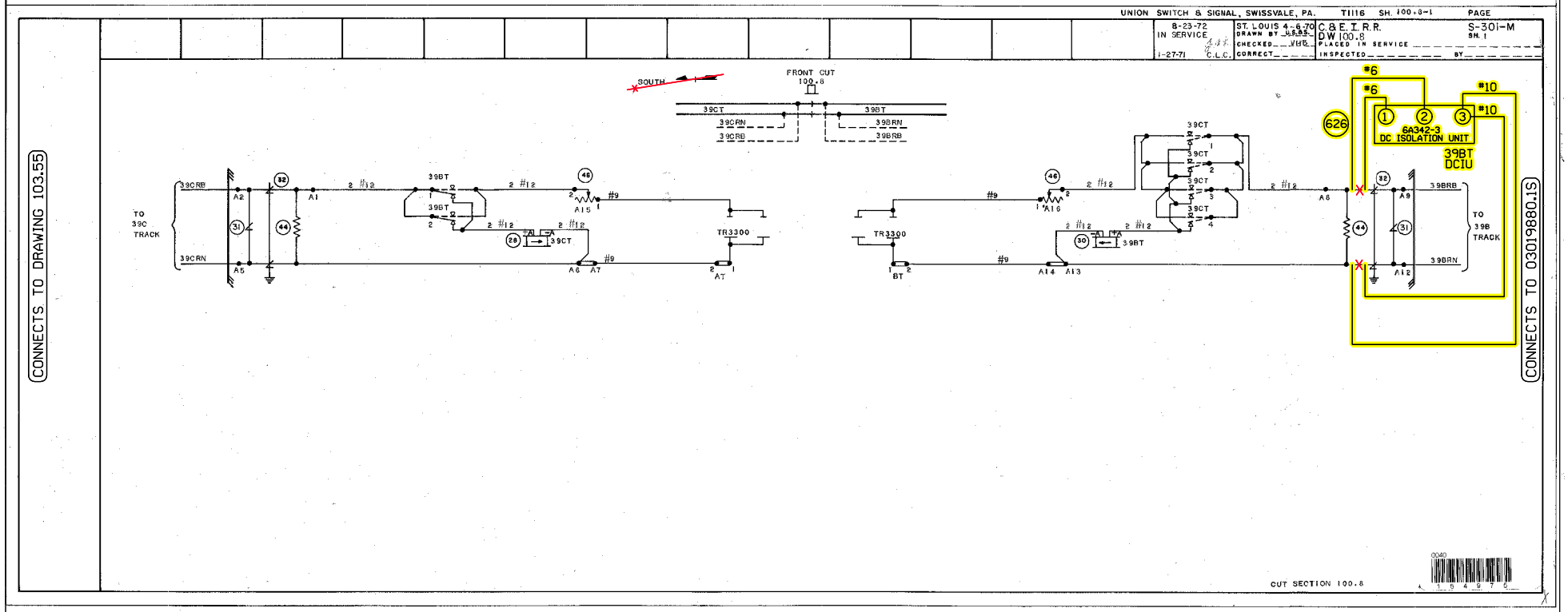

CONSTRUCTION NOTE:

1. INSTALL (1)-DC ISOLATION COUPLER (TAB 626) ON 39BT TRACK AT THIS LOCATION.

W(S) ← → E(N)

= IN

= OUT

CTC/NDR

= EXISTING, REVISE ORIGINAL IF A.C.'d

Designed: 9/30/08 INSTALL FLS/GATES & CWT AT TR-1 M.P. 98.20 Rec#: IS: WO#: 88305 /JMM /CTC/JJF	UNION PACIFIC QUALITY PRODUCTIVITY SAFETY SIGNAL DESIGN	Date: 09/30/08 Des: CTC Chk: AFE: 88305	UNION PACIFIC RAILROAD BATTERY CUT SECTION VILLA GROVE SUBDIVISION Office of Sr AVP Engineering - Signal/TCO Omaha, Nebraska	Sh.: 1 MP: 100.80 ID: 030110080.1S		

TIF ID= 030110080.1S.TIF

UNION SWITCH & SIGNAL, SWISSVALE, PA. T1116 SH. 100.8-2 PAGE

8-23-72 IN SERVICE 1-27-71 C.L.C.	ST. LOUIS 4-6-70 DRAWN BY U.S.B.S. CHECKED VHB CORRECT	C.&E.I.R.R. DW.100.8 PLACED IN SERVICE INSPECTED BY	S-301-M SH. 2

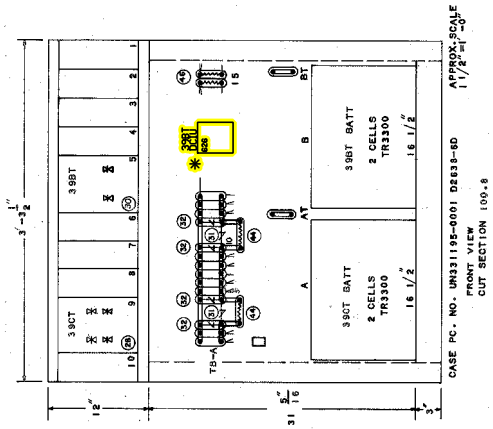

* = FIELD VERIFY PLACEMENT & "AC" PLANS ACCORDINGLY.

CUT SECTION 100.8

0040

= IN
CTC/NDR

Designed: 9/30/08 INSTALL FLS/GATES & CWT AT TR-1 M.P. 98.20 Rec#: IS: WO#: 88305 /JMM /CTC/JJF	UNION PACIFIC QUALITY PRODUCTIVITY SAFETY SIGNAL DESIGN	Date: 09/30/08 Des: CTC Chk: AFE: 88305	UNION PACIFIC RAILROAD BATTERY CUT SECTION VILLA GROVE SUBDIVISION Office of Sr AVP Engineering - Signal/TCO Omaha, Nebraska	Sh.: 2 MP: 100.80 ID: 030110080.2S			

TIF ID= 030110080.2S.TIF

TO VILLA GROVE

TO 81ST STREET

UNION SWITCH & SIGNAL, SWISSVALE, PA. T1116 SH. 98.8-1 PAGE

REV: 8-23-72 PER FIELD PLAN 1-27-71 C.L.C. | ST. LOUIS 4-6-70 DRAWN BY U.S.B. CHECKED JWB CORRECT | C.B.E.I.R.R. DW 98.8 PLACED IN SERVICE INSPECTED BY | S-301-M SH. 1

CONNECTS TO 03011008O.1S

CONNECTS TO 03019820.1X

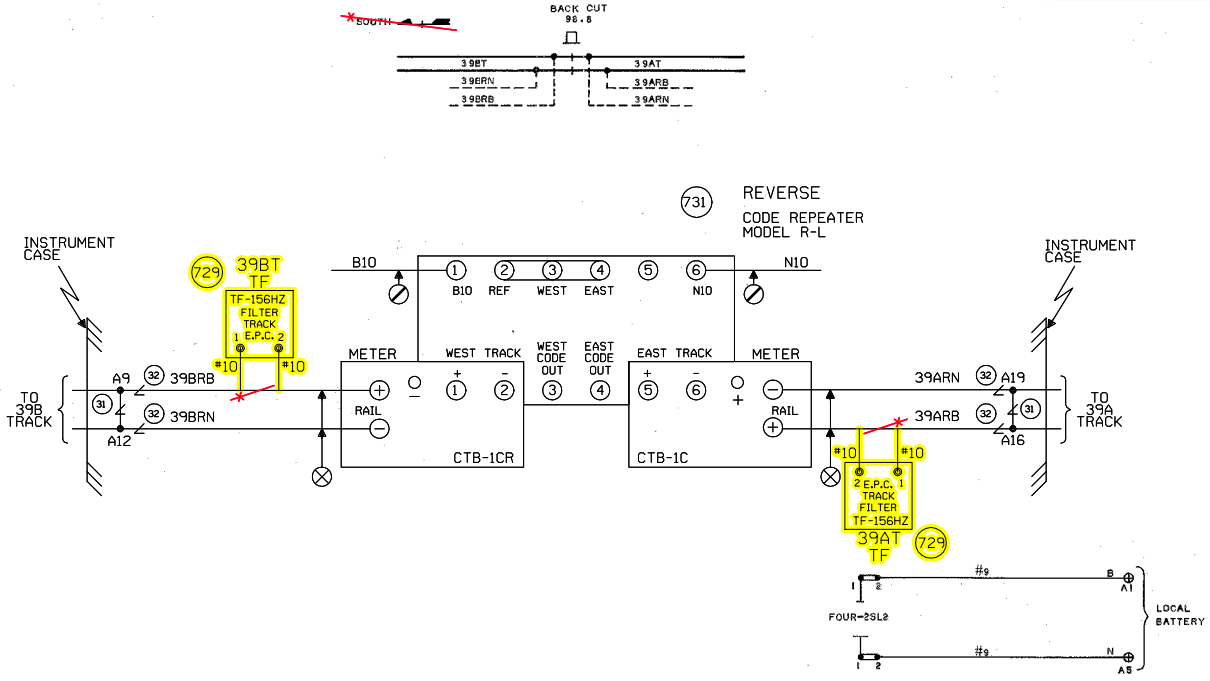

CONSTRUCTION NOTE:

1. INSTALL (1)-156 HZ TRACK FILTER (TAB 729) ON THE 39BT TRACK AND (1)-156 HZ TRACK FILTER (TAB 729) ON THE 39AT TRACK AT THIS LOCATION.

= IN

= OUT

CTC/NDR

= EXISTING, REVISE ORIGINAL IF A.C.'d

W(S) E(N)

RANKIN, ILLINOIS
CUT SECTION
M.P. 98.80
VILLA GROVE SUBDIVISION

Designed: 9/30/08
INSTALL FLS/GATES & CWT AT TR-1 M.P. 98.20
Rec#: WO#: 88305 /JMM
IS: / /CTC/JJF

Revised: 02-11-09
INSTALL FLS/GATES & CONSTANT WARNING AT TR-180 M.P. 97.75
Rec#: 15264 WO#: 53759
IS: 06-18-08 /RLT
MJD/CTC/CTC/RDD

UNION PACIFIC
QUALITY PRODUCTIVITY SAFETY
SIGNAL DESIGN

DES: CTC
DIG: CTC
CHK:
A.F.E. 53759
ID= 03019880.1S

UNION PACIFIC RAILROAD
81ST. STREET, ILLINOIS
TO VILLA GROVE, ILLINOIS
C.T.C. CIRCUITS
Office of Sr AVP Engineering - Signal/TCO Omaha, Nebraska

DATE 03-29-05
SHEET 1
DWG 98.80
S-301

UNION SWITCH & SIGNAL, SWISSVALE, PA. T1116 SH. 98.8-2 PAGE

| | | |

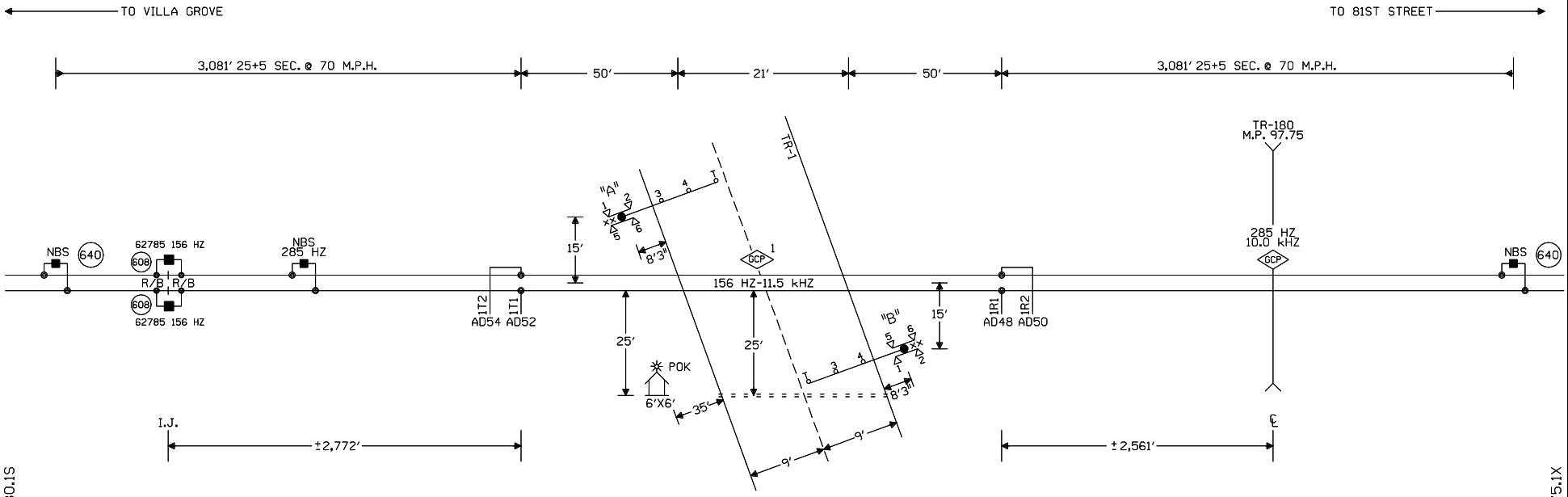

CONNECTS TO 03019880.1S

CONNECTS TO 03019775.1X

NOTES:

⊗ = TWISTED WIRES
INSULATED 1 TWIST PER FT.
ALL TRACK WIRES 2C. #6

TRANSMITTER AND RECEIVER LEADS
TO BE SEPARATED BY AT LEAST 12" IN TRENCH,
LENGTHS SHOULD NOT EXCEED MANUFACTURER'S
RECOMMENDATION.

TOP OF FOUNDATION TO BE AT SAME ELEVATION
AS THE SURFACE OF THE TRAVELED WAY & NO
MORE THAN 4" ABOVE THE SURFACE OF THE GROUND.

ALL BUNGALOW WIRING TO BE #16 AWG FLEX
UNLESS OTHERWISE SPECIFIED EXCEPT ALL GROUND
WIRE TO BE #6 AWG FLEX OR LARGER.

ALL WIRING IN GATE MECHANISM TO BE #10 "AWG FLEX".

REFER TO UP STANDARD DWG FOR BUNGALOW GROUNDING.

PORTABLE GENERATOR EXTENSION CORD
FOR 240V TO 240V IS PROVIDED AS WELL
AS A 120V TO 240V ADAPTER.

ALL LIGHTS TO BE 12" ROUNDELS.

= = = = = = 4" X 40' CONDUIT

LIGHTS: LED LIGHTS

GATE A: 17'
GATE B: 17'

xx = BELL

CRTU CELLEMETRY

W(S) ← → E(N)

NEW SHEET

Designed: 9/30/08

INSTALL FLS/GATES & CWT AT TR-1 M.P. 98.20

Rec*: WO*: 88305 /JMM
IS: / /CTC/JJF

MODIFICATION LEVEL	
Q.A. LAST LEVEL CHECKED	DR
LAST LEVEL MOD THIS TYPICAL	DR
LAST LEVEL BY DESIGNER	DR
CHANGED FROM TYPICAL?	Y

Rev 02.01.09 4K 1TKBG.1

UNION PACIFIC
QUALITY PRODUCTIVITY SAFETY
SIGNAL DESIGN

Date:	09/30/08
Des:	CTC
Chk:	JMM
AFE:	88305

UNION PACIFIC RAILROAD

RANKIN, ILLINOIS
TR-1
VILLA GROVE SUBDIVISION

Office of Sr AVP Engineering - Signal/TCO Omaha, Nebraska

Sh.:	1
DOT	167209J
MP:	98.20
ID:	03019820.1X

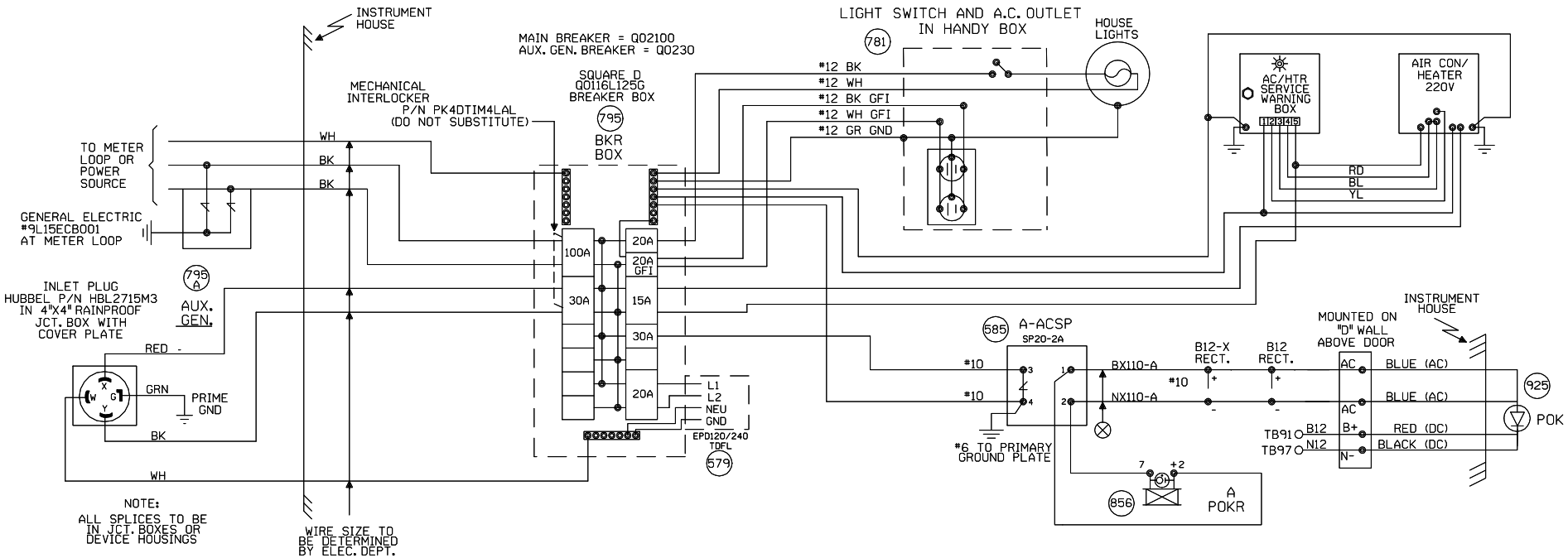

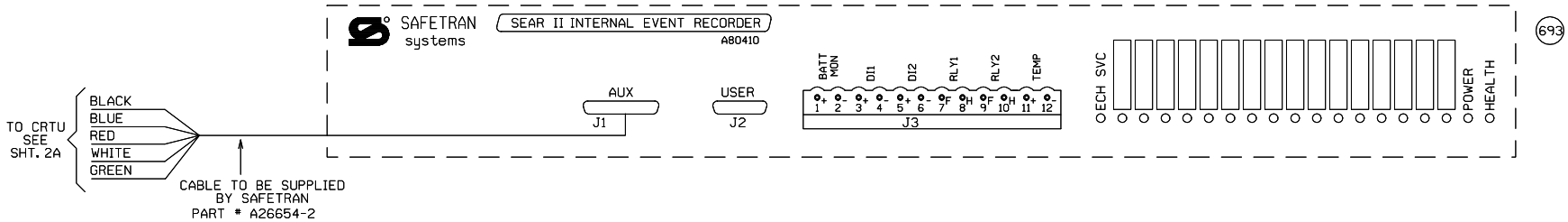

NEW SHEET

					Designed: 9/30/08 INSTALL FLS/GATES & CWT AT TR-1 M.P. 98.20 Rec#: WO#: 88305 IS: /JMM /CTC/JJF	MODIFICATION LEVEL		UNION PACIFIC QUALITY PRODUCTIVITY SAFETY SIGNAL DESIGN	Date: 09/30/08 Des: CTC Chk: JMM AFE: 88305	UNION PACIFIC RAILROAD RANKIN, ILLINOIS TR-1 VILLA GROVE SUBDIVISION Office of Sr AVP Engineering - Signal/TCO Omaha, Nebraska	Sh.: 2 DOT 167209J MP: 98.20 ID: 03019820.2X
						Q.A. LAST LEVEL CHECKED	DR				
						LAST LEVEL MOD THIS TYPICAL	DR				
						LAST LEVEL BY DESIGNER	DR				
						CHANGED FROM TYPICAL? REV 02.01.09 4K SEARAC.2	N				

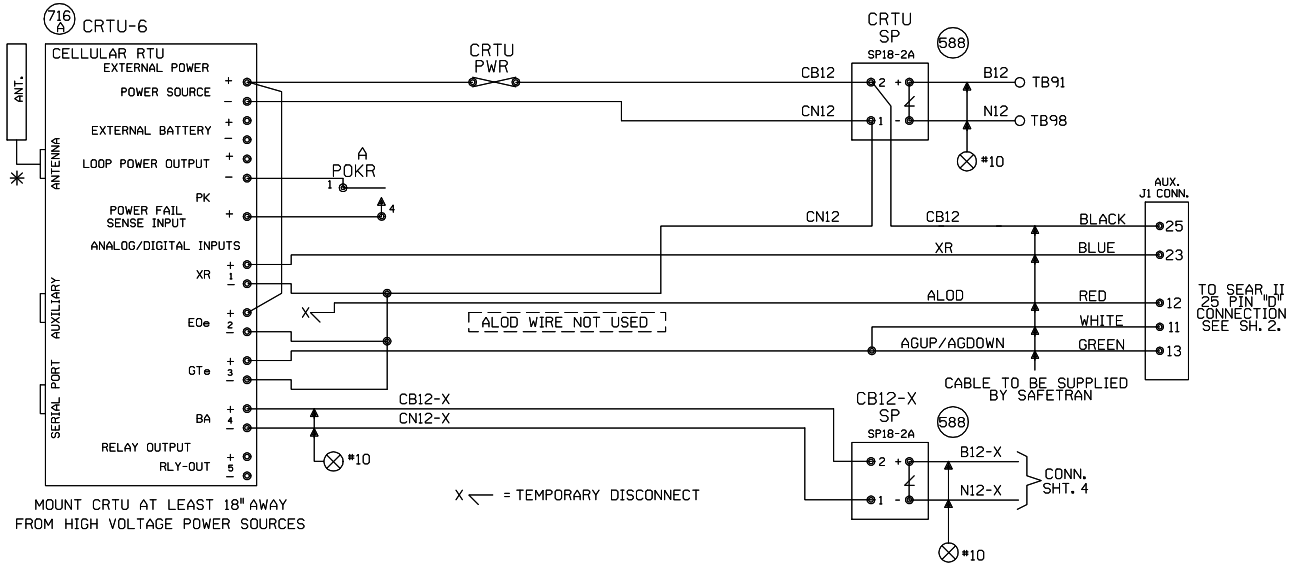

NOTES:

ALL DIODES 1N5060 OR 1N4004 UNLESS OTHERWISE NOTED.

✳ MOUNT ANTENNA ON TOP OF HOUSE.
INSTALL ANTENNA CABLE AND CHOKE PER TECH BULLENTIN #99-0015-00

ALL WIRES #18 UNLESS OTHERWISE NOTED.

ALL UNUSED 'NC' INPUTS MUST BE TIED HIGH TO BATTERY

ALL UNUSED ANALOG INPUTS MUST BE TIED HIGH TO BATTERY

ALL UNUSED 'NO' INPUTS MUST BE DISCONNECTED

NORMAL STATE FOR ANALOG CHANNELS IS EQUAL TO THE STORED NOMINAL VOLTAGE +120% OR -81%

CRTU FRONT PANEL DISPLAY CHART INDICATES NORMAL STATE

■ DIGITAL INPUT HIGH, OR POWER FAIL INPUT CLOSED ☐ DIGITAL INPUT LOW, OR POWER FAIL INPUT OPEN

■ L ← LATCH IS SET BECAUSE CRTU DETECTED AN ALARM CONDITION
12.06V L ←

'sRUN MODE' 'sRUN MODE-SILENT'
CRTU RADIO IS DISABLED. REPROGRAM CRTU WITH LAPTOP.

ANALOG AND AC INPUT MODULES AND SURGE PROTECTORS MUST BE MOUNTED LESS THAN 18" FROM CRTU

ANALOG MODULES CONVERT DC VOLTAGE TO A SQUARE WAVE. A WORKING ANALOG MODULE WILL HAVE 4.5VDC TO 8.0VDC BETWEEN 5VOUT+ AND 6VOUT-. WHERE, 0VOLTS = 0HZ OUT, 30VOLTS = 10KHZ OUT, AND 15VOLTS = 5KHZ OUT
MAKE SURE CRTU IS PROGRAMMED WITH CALIBRATION SETTINGS.

CRTU CH4 CAN BE CONNECTED TO EITHER SP18 OR EQUIPMENT SIDE OF MDSA1, TAB 565

UNIT INSTALLATION AND SETUP

R.R. SITE ID WHERE: SSSS = 4 CHARACTER SUBDIVISION ID. FILL WITH PRECEDING ZEROS AS REQUIRED. THE MAIN TRACK SUBDIVISION ID* IS IN THE CURRENT TIMETABLE. INDUSTRIAL LEADS, LEASED, AND LEAD TRACKS LISTED WITHIN THE SUBDIVISION MAY HAVE THEIR OWN UNIQUE SUBDIVISION ID*. ALWAYS REFER TO CURRENT PRINTED COPY OF THE TIMETABLE.
LLLLLLLL = 8 CHARACTERS USE DOT* AT CROSSINGS, AND
WDLLLLLL = USE 'WD' THEN MP* AT WAYSIDE LOCATIONS.
EXAMPLE = 0785WD1801.5UT
HBLLLLLL = USE 'HB' THEN MP* AT HBD SITES.
EXAMPLE = 0100-HB55.62TX
THE MP* MUST USE A DECIMAL POINT TO SEPARATE NUMBERS.
FILL WITH PRECEDING DASHES AS REQUIRED.
AA = 2 CHARACTER STATE NAME FOR ALL LOCATIONS.
MUST BE 14 CHARACTERS LONG, NO SPACES ALLOWED.

SITE IDENTIFIER: SSSSLLLLLLLLAA	0040-167209JIL
OPERATION TO RESUME: RUN	
SIGNAL STRENGTH dBm	
CARRIER ID	
FIRMWARE VERSION	2.3.
SERIAL NUMBER	
BOOT VERSION:	
CMM VERSION:	
MIN ASSIGNMENT	
ESN: (MICROBURST ONLY)	
CONFIGURATION NET	CELLEMETRY
SILENCE INTERVAL	60 MINUTES
HEALTHCHECK INTERVAL	EVERY 2 DAYS
ALARM DEFER DELAY	240 MINUTES (4 HOURS)
SIGNAL STATUS	
SCADANET STATUS	
CALIBRATION CONSTANT CH1	
CALIBRATION CONSTANT CH2	
CALIBRATION CONSTANT CH3	
CALIBRATION CONSTANT CH4	
CALIBRATION CONSTANT PS	

FIELD PROVIDES: SAMPLED NOMINAL VOLTAGES, SCADANET STATUS CALIBRATION CONSTANTS, SERIAL NUMBER, AND SIGNAL STATUS.

CHANNEL SETUP - STANDARD CONFIGURATION 32:XR,EOe,GTe,Ba

CHANNEL NORMAL STATE	SENSE (NO/NC)	NAME FUNCTION	RECOGNITION DELAY SECONDS ACTIVE	RECOGNITION DELAY SECONDS NORMAL	RETURN TO NORMAL	REPORTING MODE	ALARM LINKED CHANNEL	ALARM LINKED CRITERIA	EVENT LOGGING ENABLED OPTIONS
POWER FAIL (CH5) ■	POWER FAIL DETECT NO	PFin-PK AC POWER FAIL	7,200 ALARM	300 NORMAL	ENABLED	ALERT	DISABLED	N/A	
CH1 ■	DIGITAL INPUT NC	CH1-XR XR DOWN TO LONG	1,800 ALARM	1 NORMAL	ENABLED	ALERT	DISABLED	N/A	ANALOG VALUE SENT
CH2 ■	DIGITAL INPUT NO	CH2-EOe LIGHT OUT	120 ALARM	10 NORMAL	ENABLED	ALERT	DISABLED	N/A	
CH3 ■	DIGITAL INPUT NO	CH3-GTe GATES NOT UP/DOWN	120 ALARM	10 NORMAL	ENABLED	ALERT	DISABLED	N/A	DIGITAL EVENTS
CH4 STORED NOMINAL VOLTAGE	ANALOG INPUT N/A	CH4-Ba/V BATTERY MONITOR BATTERY LOW	600 ALARM	1200 NORMAL	ENABLED	ALERT W/UPDATE	DISABLED	N/A	PFin-PK CH1-XR CH2-EOe CH3-GTe
POWER SOURCE (CH6)	ANALOG INPUT N/A	PS-Ba/V BATTERY MONITOR BATTERY LOW	600 ALARM	1200 NORMAL	ENABLED	ALERT W/UPDATE	DISABLED	N/A	

ANALOG CHANNEL	USEFUL RANGE VOLTS LOW	USEFUL RANGE VOLTS HIGH	DISPLAYED RANGE VOLTS LOW	DISPLAYED RANGE VOLTS HIGH	RELATIVE ALARM POINT LOW	RELATIVE ALARM POINT HIGH	ABSOLUTE ALARM POINT LOW	ABSOLUTE ALARM POINT HIGH	AUTOMATIC UPDATE INTERVAL	STORED NOMINAL VOLTAGE	SAMPLED NOMINAL VOLTAGE
CH4	0.0	30.00	0.0	30.00	81%	120%	10.0	29.0	14 DAYS	12.69	
POWER SOURCE	0.0	30.00	0.0	30.00	81%	120%	10.0	29.0	14 DAYS	12.69	
RELAY OUTPUT	NAME RLY-OUT		ACTIVE SET-UP-OPEN		NORMAL CLR-DN-CLOSE		PULSE DURATION		15 SECONDS	StdCfg Ver: 2.3.3 REV'D 9-20-02	

MAINTENANCE OPERATIONS

TO START OR ABORT ANY PROCEDURE

1. PRESS THE 'CANCEL' BUTTON FIRST

WHEN RESPONDING TO A CALL, PUT THE CRTU IN THE 'SILENCE ALARMS' MODE

1. PRESS 'SELECT' AND THEN '+ ARROW' BUTTON UNTIL
   DISPLAY: ACTION?
   SILENCE ALARMS
2. PRESS THE 'SELECT' BUTTON TWICE
3. CORRECT PROBLEM AND SIMULATE NORMAL TRAIN MOVEMENT THROUGH THE LOCATION
4. EXAMINE EACH CHANNEL ON THE CRTU
5. PRESS THE '+/- ARROW' BUTTON
   VERIFY ALL CHANNELS INDICATE A NORMAL STATE
   NORMAL STATES ARE ON THE CHANNEL SETUP CHART

CLEAR TIMERS, LATCHES AND SEND ALL NORMAL

1. DO STEPS #1 - #5 ABOVE, AND PRESS 'CANCEL'.
2. PRESS 'SELECT' AND THEN '- ARROW' BUTTON UNTIL
   DISPLAY: ACTION?
   SERVICE MODE
3. PRESS 'SELECT' AGAIN TO RESET TIMERS, AND IF
   DISPLAY: SERVICE MODE
   ALL NORMAL
4. PRESS 'SELECT' AGAIN TO CLEAR LATCHES, AND SEND ALL NORMAL. SKIP STEPS #5-#6.
5. HOWEVER, IF ALARMS ARE NOT CLEARED;
   DISPLAY: SERVICE MODE
   ALARMS PENDING/PRESENT
6. PRESS 'CANCEL', CORRECT PROBLEM AND REPEAT STEPS #2 THRU #5 UNTIL ALL NORMAL SENT.

TO CANCEL THE 'SILENCE ALARMS' MODE

1. PRESS 'SELECT' AND THEN '+ ARROW' BUTTON UNTIL
   DISPLAY: ACTION?
   CANCEL SILENCE
2. PRESS THE 'SELECT' BUTTON AGAIN

EXAMINE & SET BATTERY VOLTAGE NOMINAL VALUE

1. PRESS THE '+ ARROW' OR '- ARROW' BUTTON UNTIL THE DESIRED CHANNEL IS DISPLAYED.
   DISPLAY: PS-BA:
   13.83V NORMAL
2. VERIFY THE DISPLAYED READING WITH A DIGITAL VOLTMETER
3. PRESS THE 'SELECT' BUTTON, AND THE CRTU DISPLAY WILL SWITCH BETWEEN CURRENT/SAVED NOMINAL VOLTAGE VALUES.
   DISPLAY: NOMINAL ON #6? (CURRENT)
   13.83
   DISPLAY: SAVED NOMINAL 6 (STORED)
   12.69
4. PRESS THE 'SELECT' BUTTON AND THE CURRENT OR 'NOMINAL ON' VALUE WILL BE SAMPLED AND STORED AS THE 'SAVED NOMINAL' VALUE
5. VERIFY THE 'NOMINAL ON' AND 'SAVED NOMINAL' VALUES ARE EQUIVALENT, REPEAT STEPS #1 THRU #3 & PRESS THE 'CANCEL' BUTTON.

NEW SHEET

Designed: 9/30/08
INSTALL FLS/GATES & CWT AT TR-1 M.P. 98.20
Rec*: WO*: 88305 /JMM
IS: / /CTC/JJF

MODIFICATION LEVEL	
Q.A. LAST LEVEL CHK'D.	DJ
LAST LEVEL MOD. THIS TYP.	DJ
LAST LEVEL BY DESIGNER.	DR
CHANGED FROM TYP.? Y/N	Y

UNION PACIFIC QUALITY PRODUCTIVITY SAFETY SIGNAL DESIGN

Date: 09/30/08
Des: CTC
Chk: JMM
AFE: 88305

UNION PACIFIC RAILROAD
RANKIN, ILLINOIS
TR-1
VILLA GROVE SUBDIVISION
Office of Sr AVP Engineering - Signal/TCO Omaha, Nebraska

Sh.: 2A
DOT 167209J
MP: 98.20
ID: 03019820.2AX

(REV.06.01.04) (CRTUCFG32-2BAT.3)

4-15-26-36

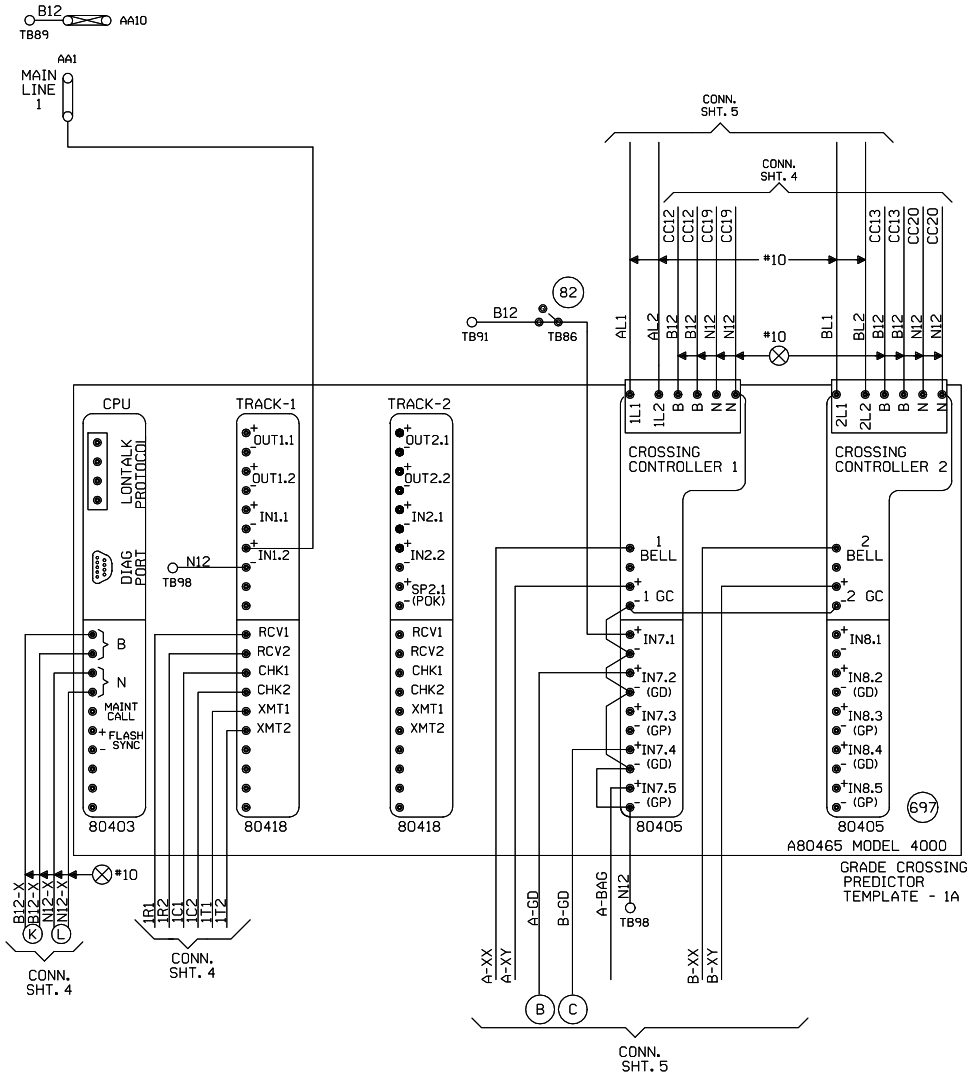

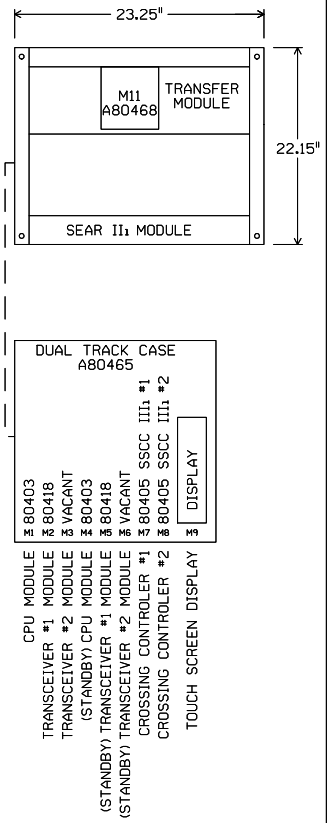

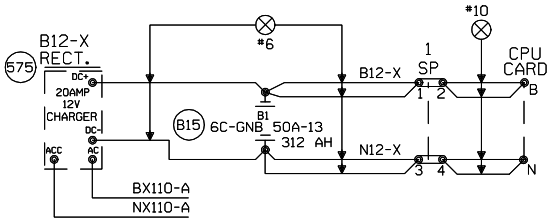

"Mf" FREQUENCY (HZ)	MAXIMUM TRANSMIT WIRE LENGTH (FEET)
86	100
114	125
156	150
211	200
285-970	250

NOTE:
EACH TRANSMITTER TO RAIL WIRE FROM XMT1 AND XMT2 MUST NOT EXCEED THE MAXIMUM LENGTH SPECIFIED IN THE TABLE SHOWN. THE RECEIVER WIRE LENGTH IS NOT CRITICAL. DOES NOT APPLY TO 6 TRACK WIRE APPLICATION.

NEW SHEET

Designed: 9/30/08
INSTALL FLS/GATES & CWT AT TR-1 M.P. 98.20
Rec*: WO*: 88305
IS: JMM
CTC/JJF

MODIFICATION LEVEL	
Q.A. LAST LEVEL CHECKED	DR
LAST LEVEL MOD THIS TYPICAL	DR
LAST LEVEL BY DESIGNER	DR
CHANGED FROM TYPICAL?	Y

REV 02.01.09 4K 2TKGF.3

UNION PACIFIC
QUALITY PRODUCTIVITY SAFETY
SIGNAL DESIGN

Date: 09/30/08
Des: CTC
Chk: JMM
AFE: 88305

UNION PACIFIC RAILROAD
RANKIN, ILLINOIS
TR-1
VILLA GROVE SUBDIVISION
Office of Sr AVP Engineering - Signal/TCO Omaha, Nebraska

Sh.: 3
DOT 167209J
MP: 98.20
ID: 03019820.3X

```
Minimum Program Steps Report
----------------------------

Location and SIN
----------------
DOT Number: 167209J
Milepost Number: 98.20
Site Name: RANKIN, IL

SIN: 762010010016 *

* Parameter is part of office check number calculation.

MCF and Template Selection
--------------------------
MCF Name: GCP-T6X-02-1.mcf
MCF Revision: 021
MCFCRC: 6076E435

Template = 1A:6 Trk Bi *

* Parameter is part of office check number calculation.

Minimum Program Steps
---------------------
TEMPLATE:  track 1-Bi, Island
Track 1 : GCP Frequency = 156 Hz
Track 1 : Approach Distance = 3081 ft
Track 1 : Prime Warning Time = 25 sec
Track 1 : GCP Transmit Level = Max
Track 1 : Isl Frequency = 11.5 kHz

TEMPLATE: AND 1 XR
AND 1 Enable Used = Yes *

TEMPLATE:  SSCC
SSCC 1 : Lamp Neutral Test = Off (Set in Field)
SSCC 2 : Lamp Neutral Test = Off (Set in Field)

TEMPLATE:  OOS
OOS Control = OOS IPs *

TEMPLATE:  IP assignment 1
IN 1.2 = Out Of Service IP 1 *

TEMPLATE:  IP assignment SSCC
IN 7.1 = AND 1 XR Enable *

GCP:  track 1
Track 1 : Island Distance = 121 ft *

* Parameter is part of office check number calculation.

Check Numbers
-------------
Office Check No. (DT 4.6.0): 357AA9E9
Office Check Number: 357AA9E9
Config. Check Number: 1D84BC77
(Based on MCF Revision 021)

Parameters not part of office check number calculation:

Track 1 : GCP Frequency = 156 Hz
Track 1 : Approach Distance = 3081 ft
Track 1 : Prime Warning Time = 25 sec
Track 1 : GCP Transmit Level = Max
Track 1 : Isl Frequency = 11.5 kHz
SSCC 1 : Lamp Neutral Test = Off (Set in Field)
SSCC 2 : Lamp Neutral Test = Off (Set in Field)

Comments
--------
<none>

Configuration Package File
--------------------------
Filename: 03019820_167209J.pac
Path: H:\01-Xing\up08345\GCP Programs\
Date/Time: 5/01/2009 12:01:46
DT Version: 4.8.5
```

NEW SHEET

Designed: 9/30/08

INSTALL FLS/GATES & CWT AT TR-1 M.P. 98.20

Rec*: WO*: 88305
IS: /JMM
/CTC/JJF

NOTE: Actual OFFSET and ISLAND distances must be verified by field personnel.

UNION PACIFIC
QUALITY PRODUCTIVITY SAFETY
SIGNAL DESIGN

Date:	09/30/08
Des:	CTC
Chk:	JMM
AFE:	88305

UNION PACIFIC RAILROAD
RANKIN, ILLINOIS
TR-1
VILLA GROVE SUBDIVISION
Office of Sr AVP Engineering - Signal/TCO Omaha, Nebraska

Sh.:	3A
DOT	167209J
MP:	98.20
ID:	03019820.3AX

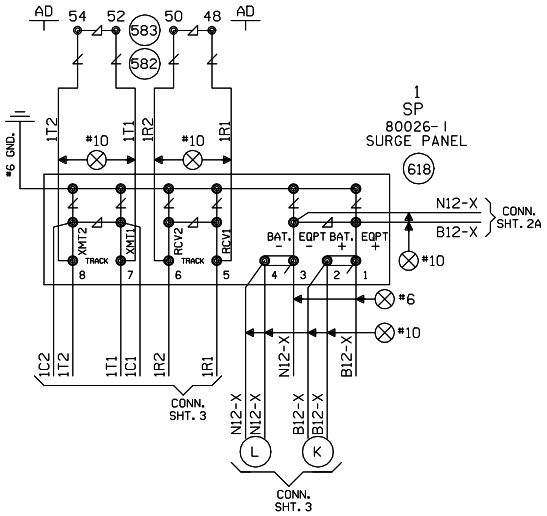

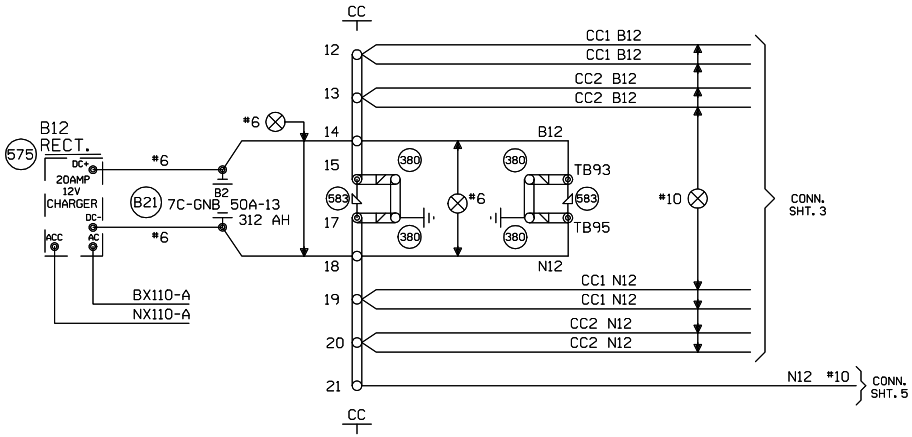

NEW SHEET

					Designed: 9/30/08 INSTALL FLS/GATES & CWT AT TR-1 M.P. 98.20 Rec#: WO#: 88305 IS: /JMM /CTC/JJF	MODIFICATION LEVEL		UNION PACIFIC QUALITY PRODUCTIVITY SAFETY SIGNAL DESIGN	Date: 09/30/08 Des: CTC Chk: JMM AFE: 88305	UNION PACIFIC RAILROAD RANKIN, ILLINOIS TR-1 VILLA GROVE SUBDIVISION Office of Sr AVP Engineering - Signal/TCO Omaha, Nebraska	Sh.: 4 DOT 167209J MP: 98.20 ID: 03019820.4X
						Q. A. LAST LEVEL CHECKED	DR				
						LAST LEVEL MOD THIS TYPICAL	DR				
						LAST LEVEL BY DESIGNER	DR				
						CHANGED FROM TYPICAL?	Y				
						REV 02.01.09 4K 4TKSPGFC.4					

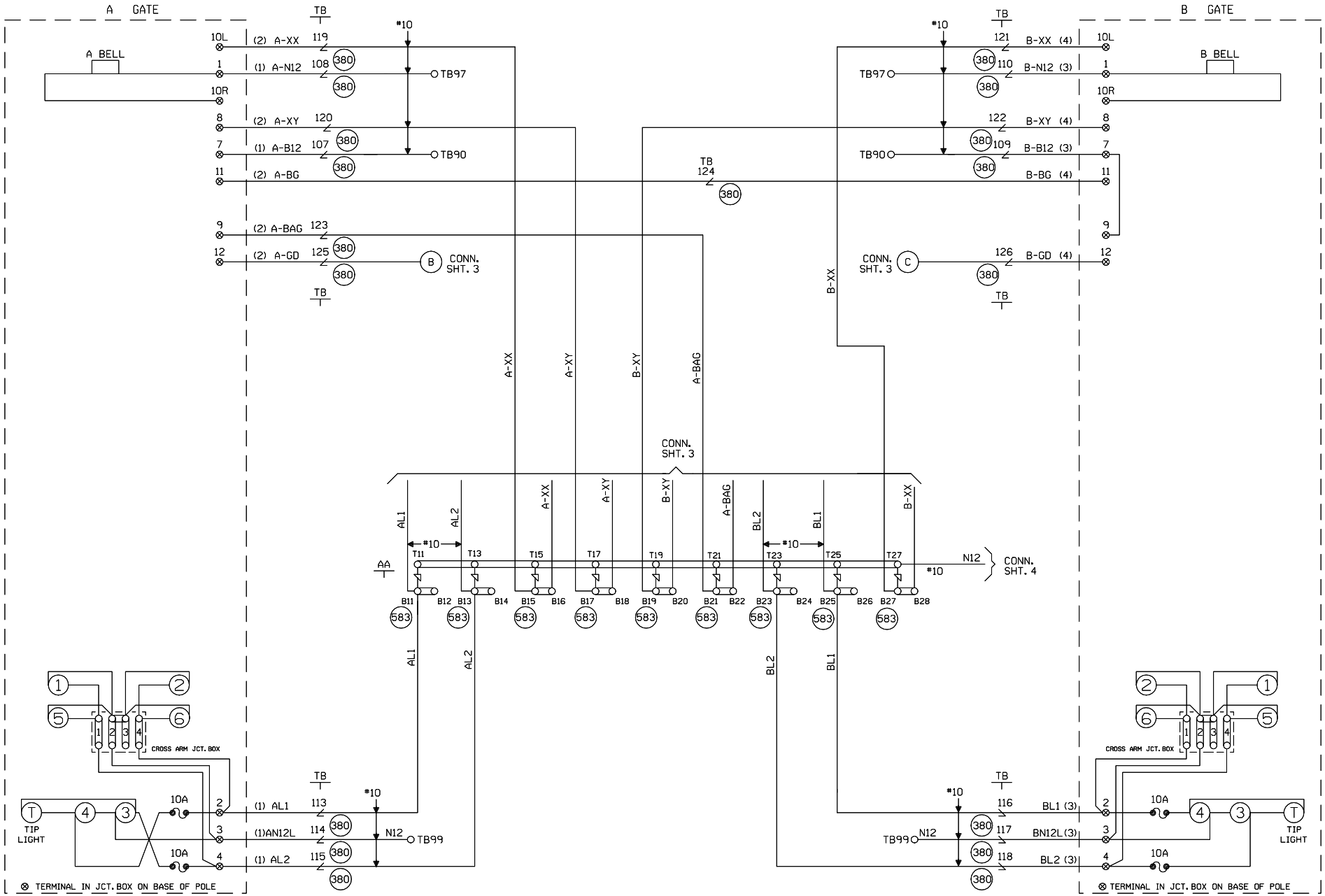

CABLE TABULATION

CABLE NO. 1 5C. NO.6 U.G.B.T.
CABLE NO. 2 7C. NO.14 U.G.B.T.
CABLE NO. 3 5C. NO.6 U.G.B.T.
CABLE NO. 4 7C. NO.14 U.G.B.T.

NEW SHEET

Designed: 9/30/08

INSTALL FLS/GATES & CWT AT TR-1 M.P. 98.20

Rec#: WO#: 88305
IS: /JMM
/ /CTC/JJF

MODIFICATION LEVEL	
Q.A. LAST LEVEL CHECKED	DR
LAST LEVEL MOD THIS TYPICAL	DR
LAST LEVEL BY DESIGNER	DR
CHANGED FROM TYPICAL?	Y

rev 02.01.09 4K GFCTYP.5

UNION PACIFIC
QUALITY PRODUCTIVITY SAFETY
SIGNAL DESIGN

Date: 09/30/08
Des: CTC
Chk: JMM
AFE: 88305

UNION PACIFIC RAILROAD

RANKIN, ILLINOIS
TR-1
VILLA GROVE SUBDIVISION

Office of Sr AVP Engineering - Signal/TCO Omaha, Nebraska

Sh.: 5
DOT 167209J
MP: 98.20
ID: 03019820.5X

WCH 3597

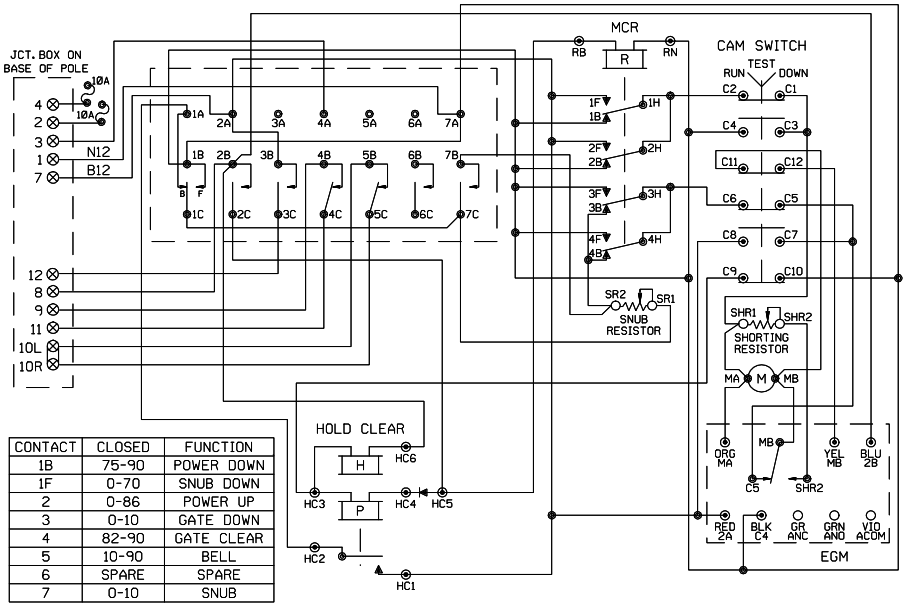

CONTACT	CLOSED	FUNCTION
1B	75-90	POWER DOWN
1F	0-70	SNUB DOWN
2	0-86	POWER UP
3	0-10	GATE DOWN
4	82-90	GATE CLEAR
5	10-90	BELL
6	SPARE	SPARE
7	0-10	SNUB

WCH 3597-RB

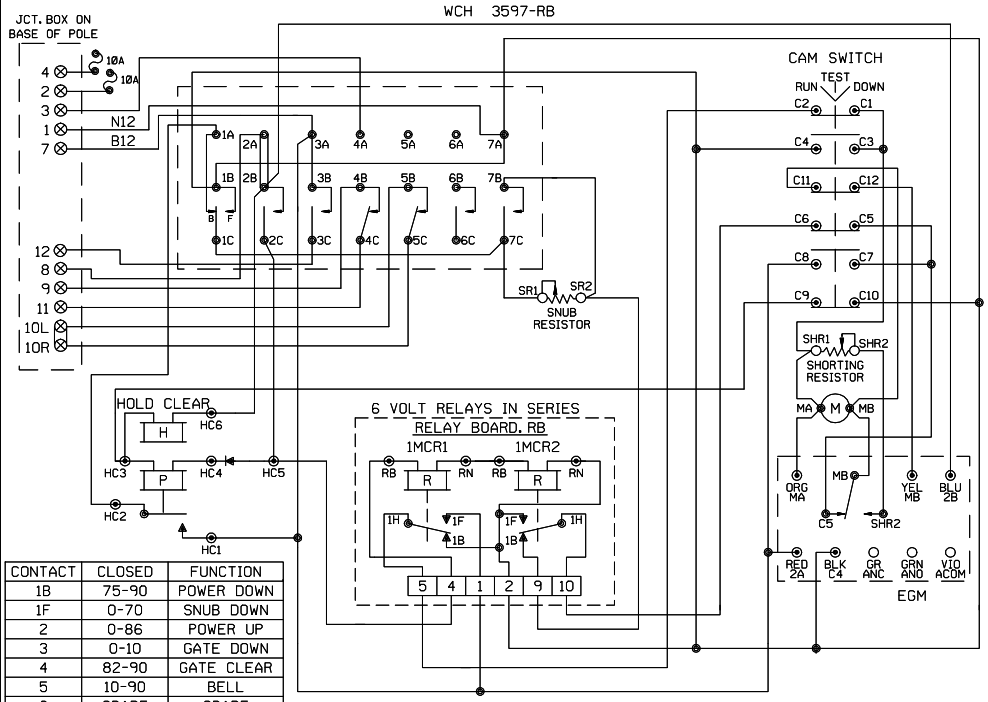

CONTACT	CLOSED	FUNCTION
1B	75-90	POWER DOWN
1F	0-70	SNUB DOWN
2	0-86	POWER UP
3	0-10	GATE DOWN
4	82-90	GATE CLEAR
5	10-90	BELL
6	SPARE	SPARE
7	0-10	SNUB

WCH 3593-E

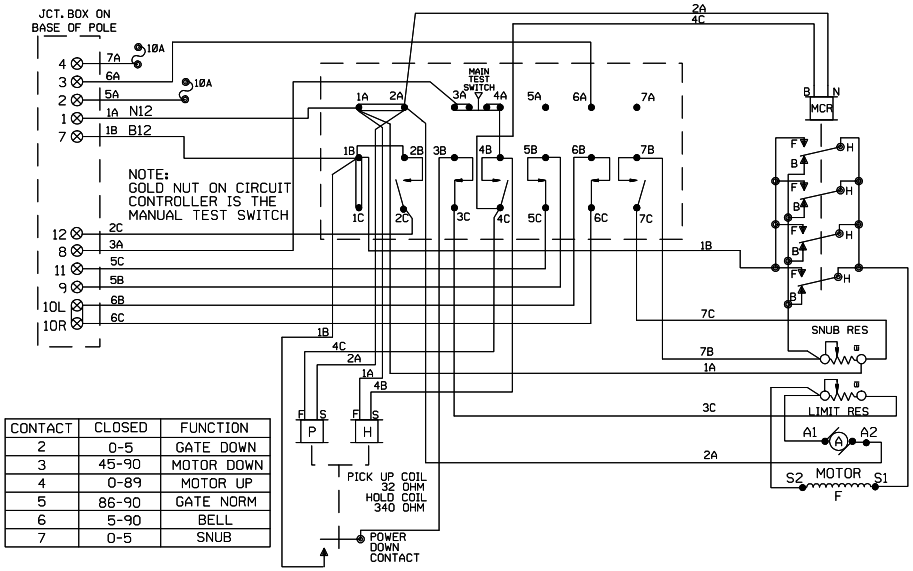

CONTACT	CLOSED	FUNCTION
2	0-5	GATE DOWN
3	45-90	MOTOR DOWN
4	0-89	MOTOR UP
5	86-90	GATE NORM
6	5-90	BELL
7	0-5	SNUB

WCH 3597-E

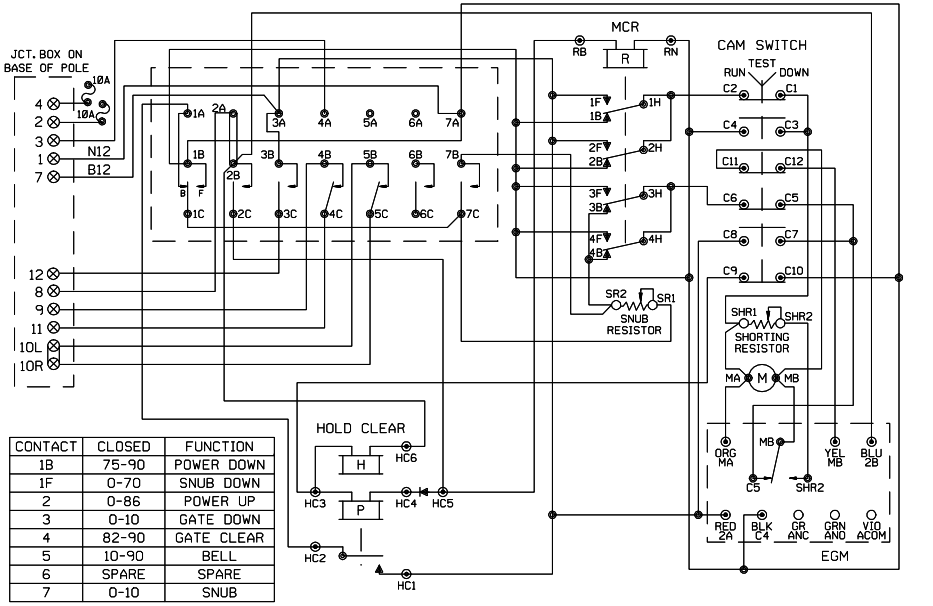

CONTACT	CLOSED	FUNCTION
1B	75-90	POWER DOWN
1F	0-70	SNUB DOWN
2	0-86	POWER UP
3	0-10	GATE DOWN
4	82-90	GATE CLEAR
5	10-90	BELL
6	SPARE	SPARE
7	0-10	SNUB

SHOW TYPE MECH. INSTALLED

ALL MECHANISMS SHOWN IN THE CLEAR POSITION

JCT. BOX ON BASE POLE

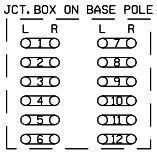

NEW SHEET

Designed: 9/30/08

INSTALL FLS/GATES & CWT AT TR-1 M.P. 98.20

Rec#: WO#: 88305
IS: /JMM
/CTC/JJF

MODIFICATION LEVEL	
Q. A. LAST LEVEL CHECKED	DR
LAST LEVEL MOD THIS TYPICAL	DR
LAST LEVEL BY DESIGNER	DR
CHANGED FROM TYPICAL?	N

REV 02.01.09 4K GWIRING.7

UNION PACIFIC
QUALITY PRODUCTIVITY SAFETY
SIGNAL DESIGN

Date: 09/30/08
Des: CTC
Chk: JMM
AFE: 88305

UNION PACIFIC RAILROAD

RANKIN, ILLINOIS
TR-1
VILLA GROVE SUBDIVISION

Office of Sr AVP Engineering - Signal/TCO Omaha, Nebraska

Sh.: 6
DOT 167209J
MP: 98.20
ID: 03019820.6X

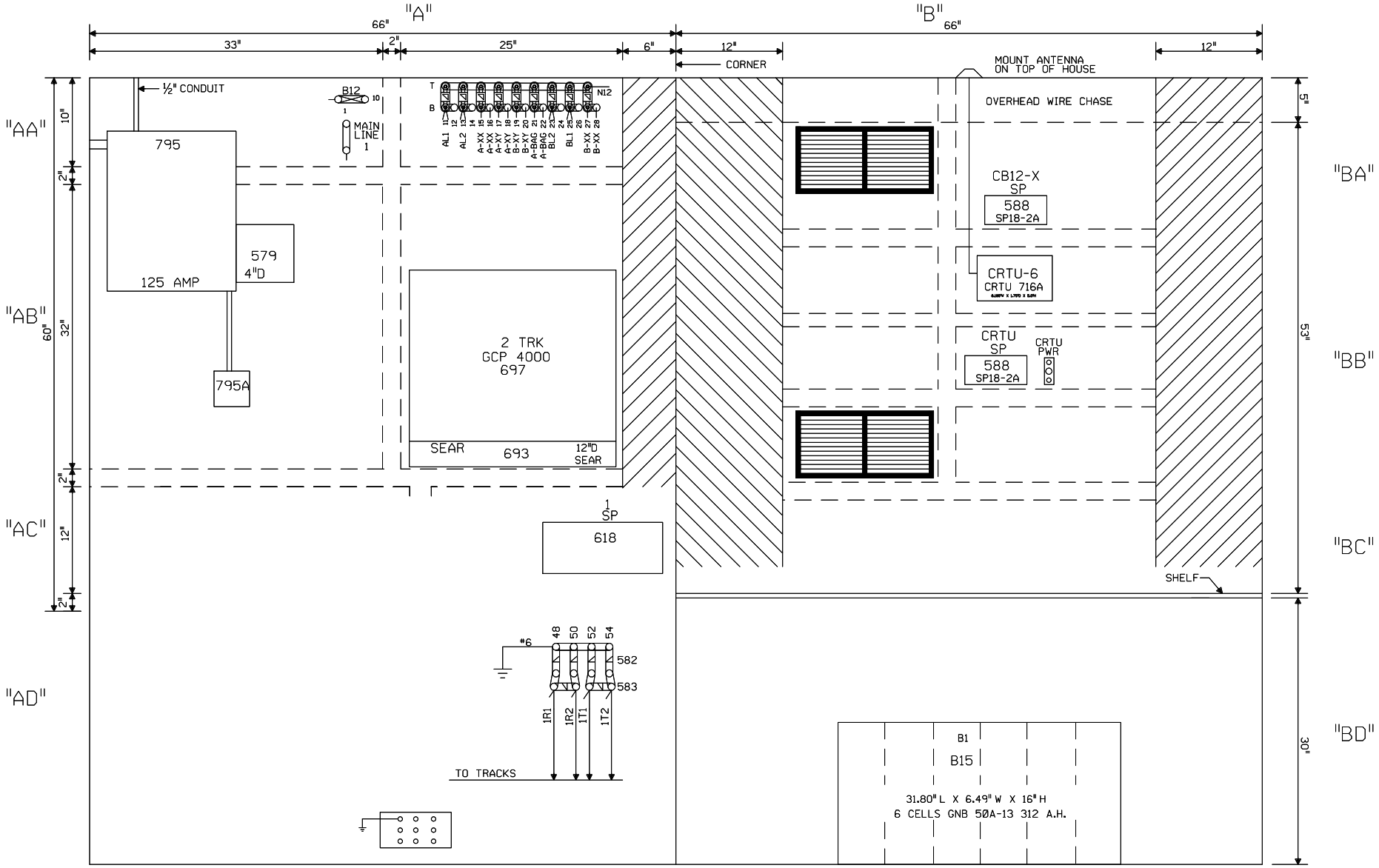

NOTE: ALL DIMENSIONS SHOWN
ARE APPROXIMATE.

0 1 2 3 4 FEET

SCALE: 1.5 INCHES = 1 FOOT

NEW SHEET

				Designed: 9/30/08 INSTALL FLS/GATES & CWT AT TR-1 M.P. 98.20 Rec#: WO#: 88305 IS: JMM /CTC/JJF	MODIFICATION LEVEL		UNION PACIFIC QUALITY PRODUCTIVITY SAFETY SIGNAL DESIGN	Date: 09/30/08 Des: CTC Chk: JMM AFE: 88305	UNION PACIFIC RAILROAD RANKIN, ILLINOIS TR-1 VILLA GROVE SUBDIVISION Office of Sr AVP Engineering - Signal/TCO Omaha, Nebraska	Sh.: 7 DOT 167209J MP: 98.20 ID: 03019820.7X
					Q.A. LAST LEVEL CHECKED	DR				
					LAST LEVEL MOD THIS TYPICAL	DR				
					LAST LEVEL BY DESIGNER	DR				
					CHANGED FROM TYPICAL?	Y				
					REV 02.01.09 4K 4TKGFC.8					

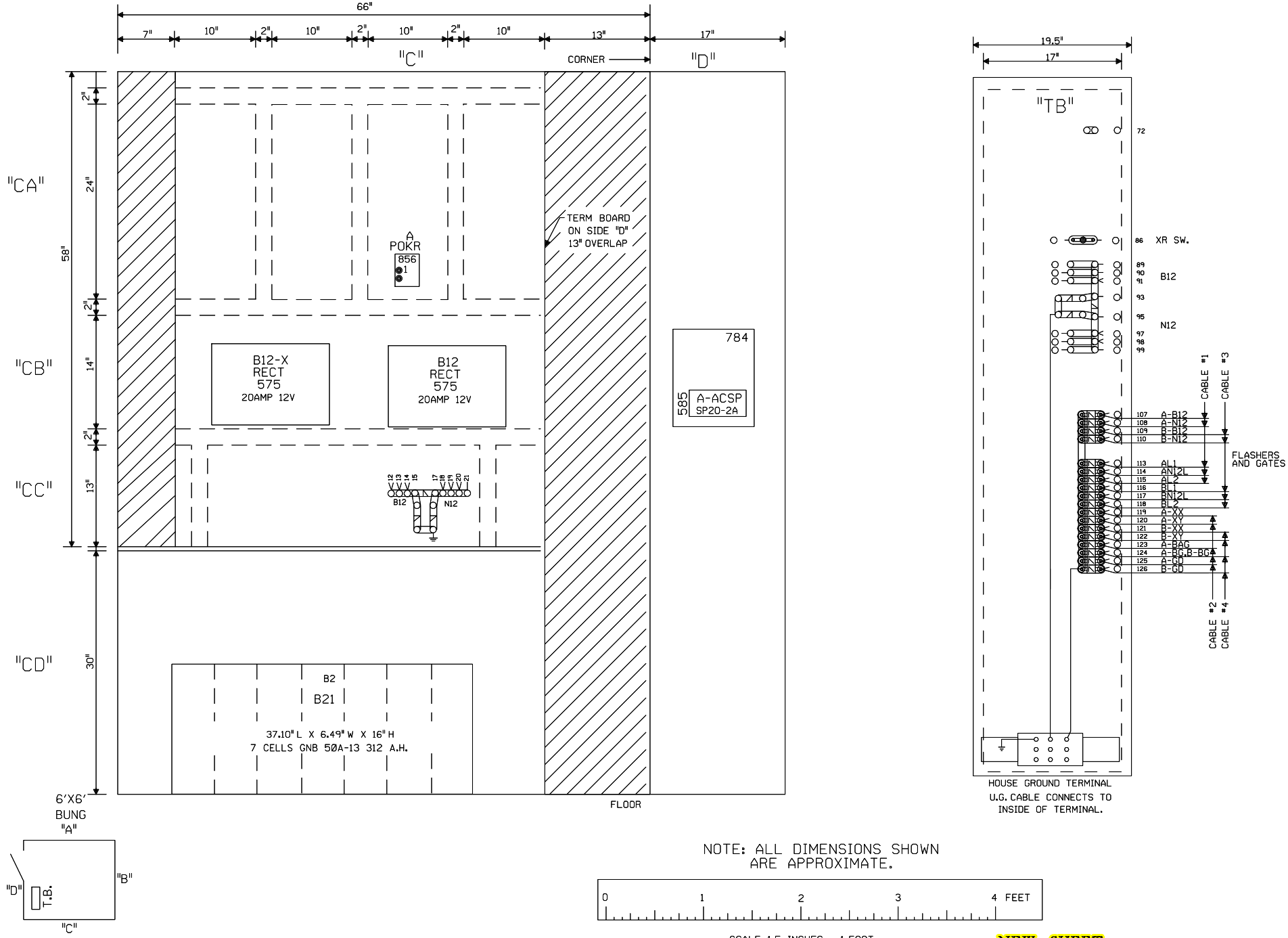

NEW SHEET

Designed: 9/30/08 INSTALL FLS/GATES & CWT AT TR-1 M.P. 98.20 Rec#: WO#: 88305 IS: /JMM /CTC/JJF	MODIFICATION LEVEL		UNION PACIFIC QUALITY PRODUCTIVITY SAFETY SIGNAL DESIGN	Date: 09/30/08 Des: CTC Chk: JMM AFE: 88305	UNION PACIFIC RAILROAD RANKIN, ILLINOIS TR-1 VILLA GROVE SUBDIVISION Office of Sr AVP Engineering - Signal/TCO Omaha, Nebraska	Sh.: 8 DOT 167209J MP: 98.20 ID: 03019820.8X
	Q.A. LAST LEVEL CHECKED	DR				
	LAST LEVEL MOD THIS TYPICAL	DR				
	LAST LEVEL BY DESIGNER	DR				
	CHANGED FROM TYPICAL?	Y				
	REV 02.01.09 4K GFC.9					