ORIGINAL

CSX TRANSPORTATION

500 Water St
13th Floor
Jacksonville, FL 32202
EMAIL Hal_Gibson@csx.com
PHONE (904) 359-1048
FAX (904) 366-4042

Revised
X-12481
T09-0048

RECEIVED
JUN 1 2009
Illinois Commerce Commission
RAIL SAFETY SECTION

Hal A. Gibson, Jr.
Principal Engineer, Public Projects

May 27, 2009

Illinois Commerce Commission
Rod Bergeron
Railroad Division
527 East Capitol Ave.
Springfield, IL 62701

Subject: Brownstown, Fayette County, IL: Install automatic FLS&G and improved approaches at 4th Street, DOT 546482M, MP QS 163.90, OP# IL0198, Docket # T09-0048

Dear Mr. Bergeron:

Enclosed is a signed copy of the Form 3 for the subject project. We have also enclosed a copy of the circuit plans for your review.

If you have any questions, or would like to discuss this project, please contact me.

Thank you,

Hal Gibson

Enclosures (Form 3 and Circuit Plans)

UPS

ORIGINAL

Completion of this form is necessary to accomplish the statutory purpose as outlined in the Illinois Public Utilities Act, chapter 111,2/3, Sec. 9. Failure to provide the requested information may prevent your request from being processed. This form has been approved by the Forms Management Center.

Form 3

RECEIVED
JUN 1 2009
Illinois Commerce Commission
RAIL SAFETY SECTION

STATE OF ILLINOIS
ILLINOIS COMMERCE COMMISSION

REVISED

Petition for permission to make a major change in crossing protection, or to install new protection under 92 Illinois Administrative Code 1535.400 (d)

X-12481

Date: **May 27, 2009**

T09-0048

To the Illinois Commerce Commission:

546482M

The petitioner **CSX Transportation** shows

(1) That it is a railroad company operating a line of railroad in the State of Illinois.

(2) That petitioner proposes and hereby makes application for authority to make a major change in crossing protection, or to install new protection, under 92 Illinois Administrative Code 1535.400 (d) adopted by this Commission.

(3) That the location of the crossing, the nature of protection now established and proposed to be established, and other pertinent facts in connection therewith, are set forth in the statement attached to and forming part of this petition.

(4) That petitioner's reasons and purpose, with reference to its said proposal are

Installation of automatic flashing light signals and gates controlled by (CWT) circuitry

(5) That the facts set forth in this petition and in the statement and plans or plats attached thereto, are, all of them, true and correct to the best of petitioner's knowledge and belief.

WHEREFORE, the petitioner prays that the Commission will, if deemed desirable by the Commission, set the aforesaid matter for hearing, and that the Commission enter an order or adopt a resolution consenting to and granting authority for the making of the said proposed changes in or additions to crossing protection.

CSX Transportation

By

Hal Gibson
Principal Engineer Public Projects
(904) 359-1048

Tamy Butler
(Attorney for Petitioner)

CSX Transportation
500 Water Street, SC J-150
Jacksonville, FL 32202
(Attorney's Address)

DOCKETED

JUN - 1 2009

Statement, attached to and part of an application for permission to make a major change in crossing protection or to install new protection, under 92 Ill. Adm. Code 1535.400(d).

1. Name of Railroad Company **CSX Transportation**

2. Crossing Number **546482M**

3. Village or City **Brownstown**

4. Name of Street or Highway **4th St.**

5. Public Agency Maintaining Highway **Fayette County**

6. Protection now established: (Give full description. Indicate the hours of any manual protection.)

   Crossbucks with RR Advance Warning Signs

7. Protection desired: (Give details)

   Automatic flashing light signals and gates with CWT

8. Number of main tracks **1** Other tracks **2**

9. Number of passenger train movements: 6 a.m. to 6 p.m. **0** 6 p.m. to 6 a.m. **0**

10. Number of freight train movements: 6 a.m. to 6 p.m. **12** 6 p.m. to 6 a.m. **0**

11. Approximate number of switch movements: 6 a.m. to 6 p.m. **1** 6 p.m. to 6 a.m. **0**

12. Maximum speed of trains at crossing on each track in each direction

Track 1 N/E Bound	**60**	mph	S/W Bound	**60** mph
Track 2 N/E Bound		mph	S/W Bound	mph
Track 3 N/E Bound		mph	S/W Bound	mph

13. Passenger platforms served by tracks within the limits of track circuits, if any **NA**

14. Where automatic signals or gates are proposed, approximately number of train or engine movements daily which would cause false indications or operation **12**

15. Nature and approximate amount of street or highway traffic over crossing
125 AADT

16. In addition to the information listed hereinbefore in Form 3, attach a track plan or plat of the proposed crossing. This plan should show:

(a) Width and surface of highway.
(b) Highway intersections (including private driveways to be so indicated) and location of established highway signs or signals within 100 feet of crossing.
(c) Location of tracks, switches and other railroad facilities such as block signals, etc. within limits of track circuits, present and/or proposed.
(d) Where automatic protection is proposed, show proposed location of signals (sidelights, cantilevers, etc., if any).
(e) Show the length of each operation track section within the control limits of the crossing protection and its function.

ADDITIONAL INFORMATION

VERIFICATION

I, **Hal Gibson**, first being duly sworn upon oath depose and say that I am **Principal Engineer Public Projects** of **CSX**, an **Virginia** corporation; that I have read the above and foregoing petition by me subscribed and know the contents thereof; that said contents are true in substance and in fact, except as to those matters stated upon information and belief, and as to those, I believe same to be true.

Principal Engineer
Public Projects

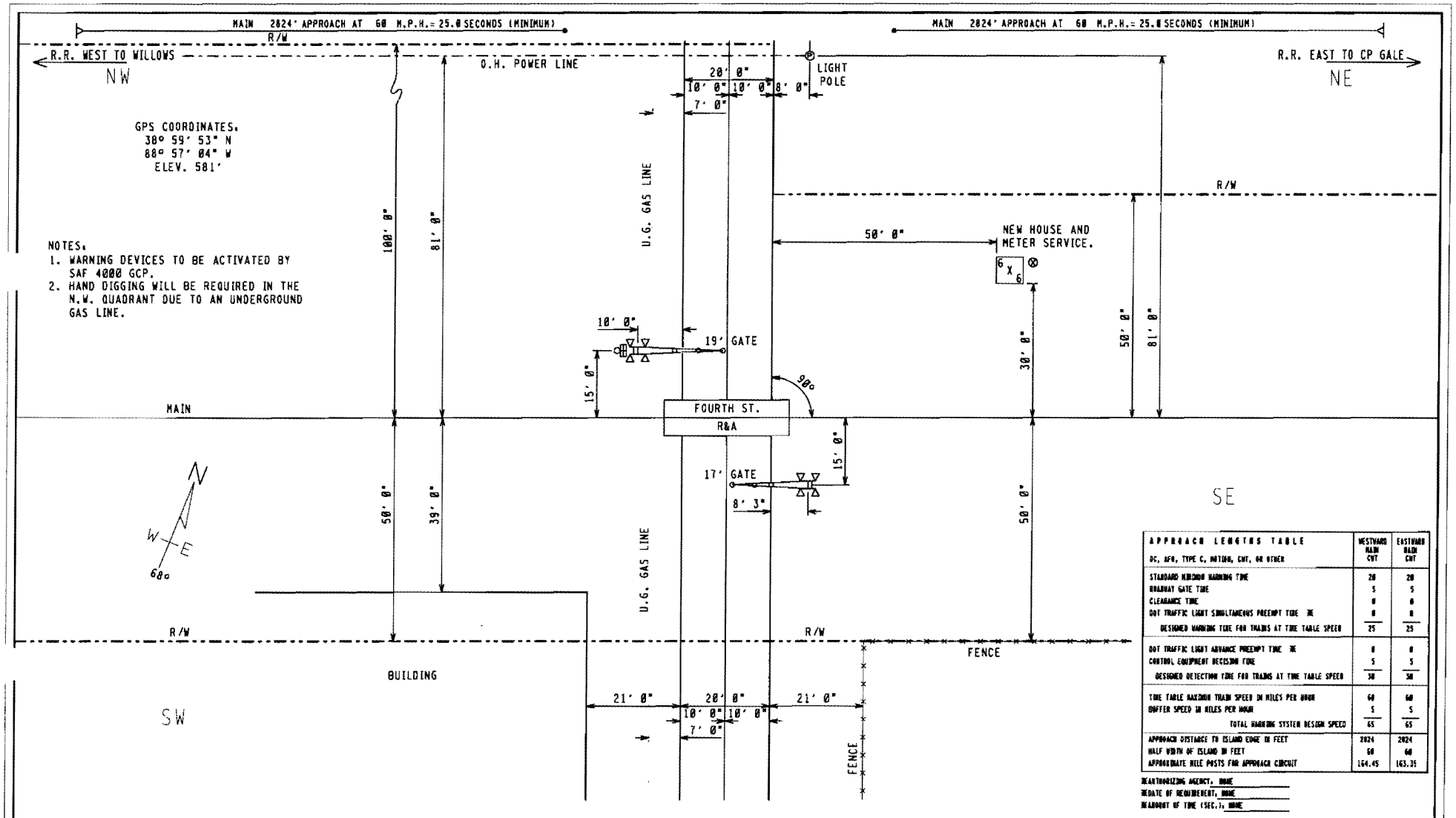

APPROACH LENGTHS TABLE DC, AFO, TYPE C, MATION, CWT, OR OTHER	WESTBOUND MAIN CWT	EASTBOUND MAIN CWT
STANDARD MINIMUM WARNING TIME	20	20
ROADWAY GATE TIME	5	5
CLEARANCE TIME	0	0
DOT TRAFFIC LIGHT SIMULTANEOUS PREEMPT TIME *	0	0
DESIGNED WARNING TIME FOR TRAINS AT TIME TABLE SPEED	25	25
DOT TRAFFIC LIGHT ADVANCE PREEMPT TIME *	0	0
CONTROL EQUIPMENT DECISION TIME	5	5
DESIGNED DETECTION TIME FOR TRAINS AT TIME TABLE SPEED	30	30
TIME TABLE MAXIMUM TRAIN SPEED IN MILES PER HOUR	60	60
BUFFER SPEED IN MILES PER HOUR	5	5
TOTAL WARNING SYSTEM DESIGN SPEED	65	65
APPROACH DISTANCE TO ISLAND EDGE IN FEET	2824	2824
HALF WIDTH OF ISLAND IN FEET	60	60
APPROXIMATE MILE POSTS FOR APPROACH CIRCUIT	164.45	163.35

*AUTHORIZING AGENCY. NONE
*DATE OF REQUIREMENT. NONE
*AMOUNT OF TIME (SEC.). NONE

FILE NAME. QS16390.H01	REVISION DATES	PRODUCED FOR.	PRODUCED BY.	LEGEND	GUARD RAIL	METER SERVICE ⊗	STREET NAME. FOURTH ST.
DATE DRAWN. 06-06-2006	05-08-08 DPL	CSX TRANSPORTATION	SAFETRAN systems	CSX ROW	O.H. POWER	POLE Ⓟ	CITY & STATE. BROWNSTOWN, IL
DRAWN BY. VINCENT ROGERS	- -	RAIL TRANSPORT GROUP ENGINEERING	7775 BAYMEADOWS WAY	R/R POLELINE	FENCE	FIRE PLUG Ⓕ	PROJECT #. IL2006029
CHECKED BY. MICHAEL ALLGOOD	- -	COMMUNICATIONS AND SIGNALS	SUITE 250	GAS	WATER	SEWER CAP Ⓢ	OP #. IL0198
SSC #. E081	- -		JACKSONVILLE, FL 32256	FIBER OPTIC	SEWER	GAS VENT Ⓥ	DOT. 546482M

PROPOSED CROSSING LAYOUT
SCALE = 20:1

INDEX

CONTENTS

SH. NO.		REVISION NO. 1	2	3	4	5	6	7	8	9
I01	INDEX AND REVISIONS	⧄								
S01	TRACK AND SIGNAL PLAN	⧄								
P01	MINIMUM PROGRAM STEPS REPORT CWE-90	⧄								
E01	POWER DISTRIBUTION	⧄								
C01	DETECTION DEVICE CONSIST CWE-90	⧄								
C02	DETECTION CIRCUITRY CWE-90	⧄								
C03	DETECTION CIRCUITRY CWE-90	⧄								
C04	CROSSING WARNING DEVICE GATE CIRCUITRY	⧄								
C05	CROSSING WARNING DEVICE LIGHT CIRCUITRY	⧄								
C06	CROSSING WARNING DEVICE CIRCUITRY	⧄								
C07	SEAR II: CONFIGURATION & FUNCTIONS	⧄								

⧄ = PLANS SENT TO FIELD (DISTRIBUTED)

⊠ = PLANS AS-IN-SERVICED (UP TO DATE)

THIS PLAN DOES ☐ DOES NOT ☒
SUPERSEDE PLAN DATED 02-20-07
CSX PROJECT # IL2006035

NEW YORK
SAFETRAN systems
PROJECT #: IL2006829
DES/CHKD BY: DPL/SWS
DATE: 05-01-08

◯ = NOTE

4K.I01
REV. 02-29-08

DESIGN DATE	REV. NO.
05-01-08	1

REVISIONS

REV. NO.	PROJECT NO.	DESIGN DATE	IN SERVICE DATE	REVISION DATE
1	IL2006829	05-01-08		

TO BE COMPLETED ON A.I.S.

CSX TRANSPORTATION
RAIL TRANSPORT GROUP ENGINEERING
COMMUNICATIONS AND SIGNALS

CP GALE TO WILLOWS
FOURTH ST. (546482H)
INDEX AND REVISIONS
BROWNSTOWN, IL M.P. QS-163.98

DESIGNED	DIGITIZED	CHECKED	DATE
SAF/DPL	SAF/DPL	SAF/SWS	05-01-08

DRAWING	SHEET NO	FILE	SHEET
-----	-----	QS16398	I01

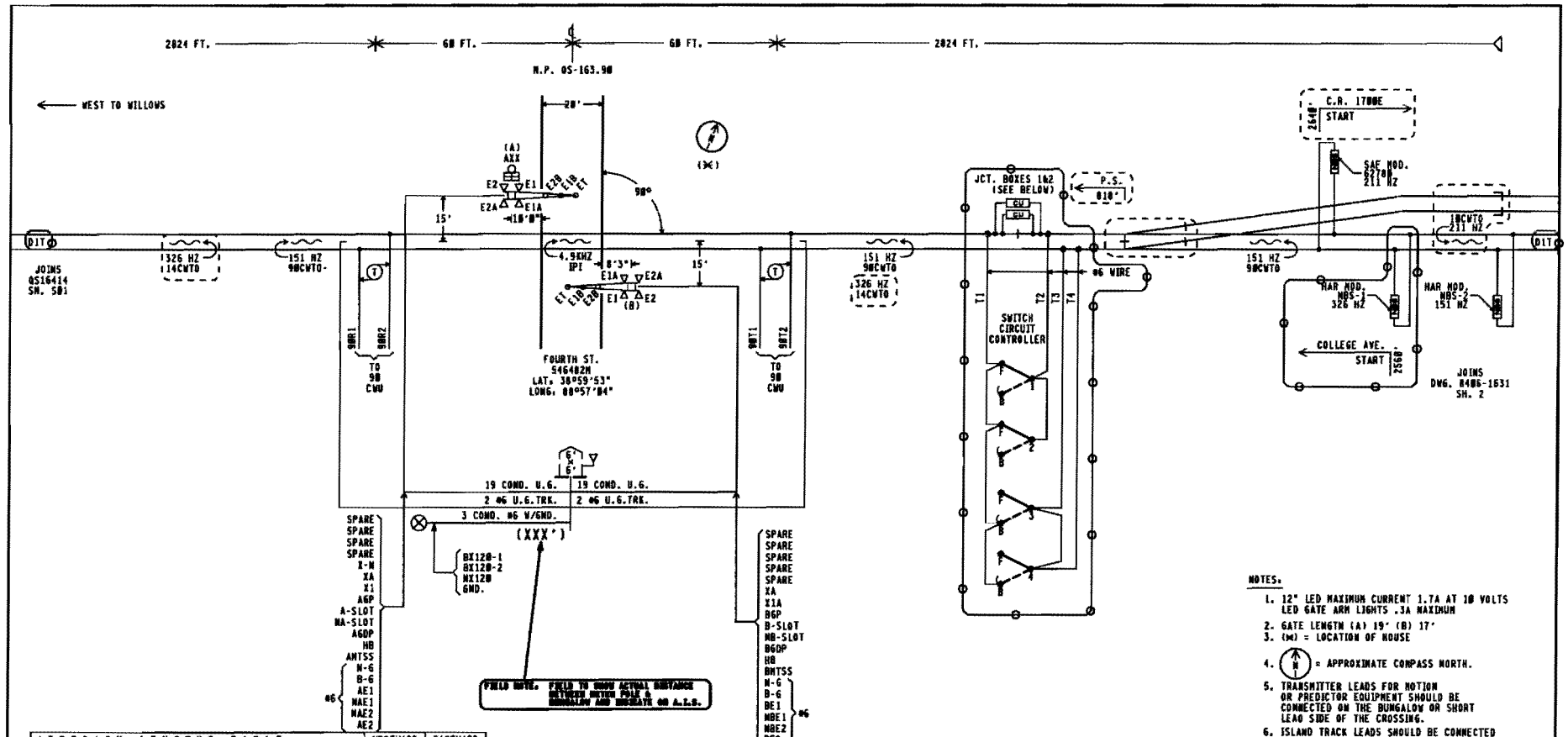

APPROACH LENGTHS TABLE DC, AFO, TYPE C, MOTION, CWT, OR OTHER	WESTWARD MAIN 1 CWT	EASTWARD MAIN 1 CWT
STANDARD MINIMUM WARNING TIME IN SECONDS	20	20
ROADWAY GATE TIME IN SECONDS	5	5
CLEARANCE TIME IN SECONDS	0	0
DOT TRAFFIC LIGHT SIMULTANEOUS PREEMPT TIME IN SECONDS ✱	0	0
DESIGNED WARNING TIME FOR TRAINS AT TIME TABLE SPEED	25 SEC.	25 SEC.
DOT TRAFFIC LIGHT ADVANCE PREEMPT TIME IN SECONDS ✱	0	0
CONTROL EQUIPMENT DECISION TIME IN SECONDS	5	5
DESIGNED DETECTION TIME FOR TRAINS AT TIME TABLE SPEED	30 SEC.	30 SEC.
TIME TABLE MAXIMUM TRAIN SPEED IN MILES PER HOUR	60	60
BUFFER SPEED IN MILES PER HOUR	5	5
TOTAL WARNING SYSTEM DESIGN SPEED IN MILES PER HOUR	65	65
APPROACH DISTANCE TO ISLAND EDGE IN FEET	2024	2024
HALF WIDTH OF ISLAND IN FEET	60	60
APPROXIMATE MILE POSTS FOR APPROACH CIRCUIT	164.45	163.35

✱AUTHORIZING AGENCY. NONE
✱DATE OF REQUIREMENT. NONE
✱AMOUNT OF TIME (SEC.). NONE

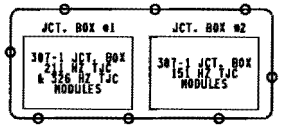

NOTES.

1. 12" LED MAXIMUM CURRENT 1.7A AT 10 VOLTS LED GATE ARM LIGHTS .3A MAXIMUM
2. GATE LENGTH (A) 19' (B) 17'
3. (✱) = LOCATION OF HOUSE
4. (N) = APPROXIMATE COMPASS NORTH.
5. TRANSMITTER LEADS FOR MOTION OR PREDICTOR EQUIPMENT SHOULD BE CONNECTED ON THE BUNGALOW OR SHORT LEAD SIDE OF THE CROSSING.
6. ISLAND TRACK LEADS SHOULD BE CONNECTED 50 FEET FROM ROAD EDGE BUT ON NARROW ROADS (20' OR LESS) ISLAND LENGTH SHALL BE 120 FEET.
7. WARNING SYSTEM APPROACH CIRCUIT DISTANCES ARE TO BE MEASURED FROM THE ISLAND TRACK CONNECTIONS.

NEW WORK EXCEPT
(- - -) = EXISTING

SAFETRAN systems
PROJECT #. IL2006029
DES/CHKD BY. DPL/SWS
DATE. 05-01-06

(⬭) = NOTE

THIS PLAN DOES ☐ DOES NOT ☒
SUPERSEDE PLAN DATED. 02-20-07
CSX PROJECT #. IL2006035

MARK-UPS THIS SHEET PER THE ABOVE PROJECT
⊖⊖⊖ = IN

4K.S01
REV. 12-22-06

CSX TRANSPORTATION
RAIL TRANSPORT GROUP ENGINEERING
COMMUNICATIONS AND SIGNALS

CP GALE TO WILLOWS
FOURTH ST. (546482M)
TRACK AND SIGNAL PLAN
BROWNSTOWN, IL M.P. QS-163.90

DESIGNED	DIGITIZED	CHECKED	DATE
SAF/DPL	SAF/DPL	SAF/SWS	05-01-06

DESIGN DATE	REV. NO.	DRAWING	SHEET NO	FILE	SHEET
05-01-06	1	-----	-----	QS16390	S01

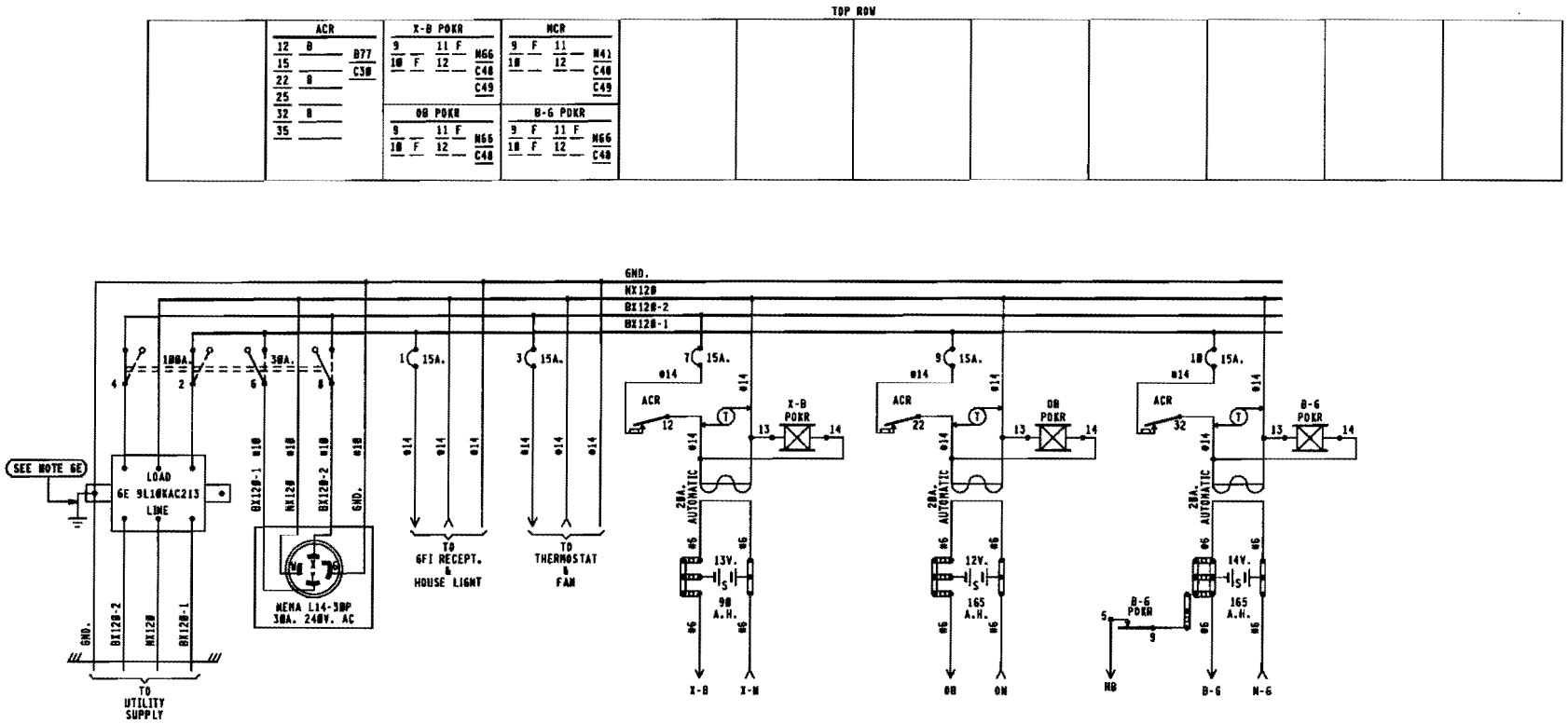

BX120-1	BX120-2
16.0 AMPS	8.0 AMPS

MAXIMUM LOAD
CALCULATED PER SS360

NOTES.

1 - REFERENCES ARE PER SCMS-13.
2 - ARRESTERS ARE PER SS382.
3 - SHELF RELAY PLACEMENT ON CONSIST CHART HAS NO SIGNIFICANCE.
4 - PLUG-IN RELAYS ARE VIEWED FROM THE FRONT OF RACK.
5 - BATTERY A.H. CAPACITY SHOWN IS THE MINIMUM REQUIREMENT.
6 - WIRING
  A - FEED TO ALL BUSSES, LIGHT CIRCUITS,MOTOR CIRCUITS TO BE #10 FLEX.
  B - 120-VOLT FEED FROM ENTRANCE TO POWER BUSS TO BE #10 FLEX.
  C - ALL TRACK WIRES TO BE #10 FLEX.
  D - ALL OTHERS TO BE #16 FLEX UNLESS NOTED.
  E - GROUND WIRE NOT NECESSARY WHEN GE ARRESTER IS MOUNTED ON GROUND PLANE OR METAL ENCLOSURE AFFIXED DIRECTLY TO BUNGALOW METALLIC STRUCTURAL MEMBER.
7 - CIRCUIT INTERRUPTERS 2 & 4 ARE MECHANICALLY INTERLOCKED WITH CIRCUIT INTERRUPTERS 6 & 8.

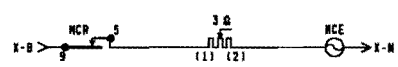

THIS PLAN DOES ☐ DOES NOT ☒
SUPERSEDE PLAN DATED 02-20-07
CSX PROJECT # IL2006035

NEW WORK

SAFETRAN systems
PROJECT #: IL2006029
DES/CHKD BY: DPL/SWS
DATE: 05-01-08

◯ = NOTE

40006CP.E01
REV. 02-29-08

6'X 6' RELAY HOUSE W/FARADAY SHIELD

CSX TRANSPORTATION
RAIL TRANSPORT GROUP ENGINEERING
COMMUNICATIONS AND SIGNALS

CP GALE TO WILLOWS
FOURTH ST. (546402N)
POWER DISTRIBUTION
BROWNSTOWN, IL M.P. QS-163.90

DESIGNED	DIGITIZED	CHECKED	DATE
SAF/DPL	SAF/DPL	SAF/SWS	05-01-08

DESIGN DATE	REV. NO.	DRAWING	SHEET NO	FILE	SHEET
05-01-08	1	-----	-----	QS16390	E01

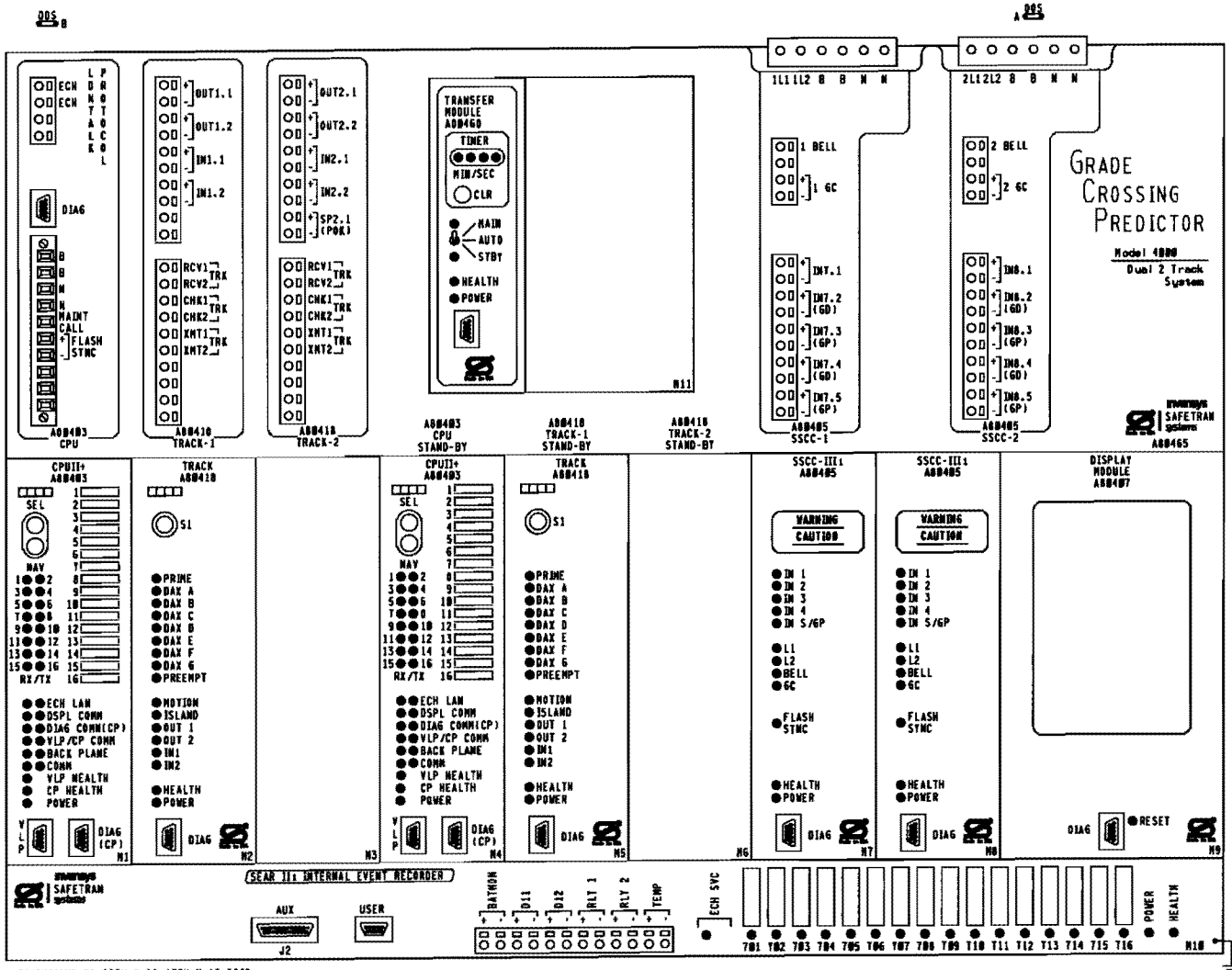

GCP 4000 APPLICATION NOTES:

1. THE GRADE CROSSING PREDICTOR (GCP) IS A MODULAR MICROPROCESSOR CONTROLLED SYSTEM THAT IS DEPLOYED TO CONTINUALLY MONITOR THE APPROACHES TO RAILROAD GRADE CROSSINGS AND TO CONTROL THE LAMPS, GATES AND BELLS ASSOCIATED WITH THOSE CROSSINGS. WHEN EQUIPPED WITH THE SEAR II: MODULE THE GCP 4000 WILL RECORD EVENTS AND REPORT ALARMS WHEN CONNECTED TO AN OFFICE SYSTEM.

2. THE GCP 4000 GCP (A80465) IS A TWO TRACK REDUNDANT UNIT CAPABLE OF DRIVING 4 INDEPENDENT FLASHER AND GATE SIGNALS AND RECORDING EVENTS AND REPORTING ALARMS. THE STANDARD A80465 INCLUDES THE FOLLOWING MODULES.

SLOT	MODULE	FUNCTION	PART NO.
M1	CPU-II+	MAIN	A80403
M2	TRACK-1	MAIN	A80410
M3	PANEL	NONE	D39325
M4	CPU-II+	STANDBY	A80403
M5	TRACK-1	STANDBY	A80410
M6	PANEL	NONE	D39325
M7	SSCC-III:	A SIGNAL	A80405
M8	SSCC-III:	B SIGNAL	A80405
M9	DISPLAY MODULE		A80407
TOP CENTER	TRANSFER UNIT		A80460
LOWER BAY	SEAR II:	RECORDER	A80410
OPTIONAL MODULES:			A80413
RIO MODULE			

3. EACH TRACK MODULE HAS TWO PROGRAMMABLE INPUTS AND TWO PROGRAMMABLE OUTPUTS.

4. THE SEAR II: INTERNAL EVENT RECORDER HAS INPUTS FOR ONE BATTERY MONITOR, TWO NON-VITAL INPUTS AND TWO PROGRAMMABLE RELAY DRIVES (HEEL/FRONT).

5. LOCATED ON THE FRONT OF EACH MODULE THERE ARE LED LIGHTS TO INDICATE THE ACTIVITY OF CERTAIN FUNCTIONS OCCURRING INSIDE THE GCP.

6. BETWEEN SLOT 1 & 2 THERE IS A CHASSIS INDENTIFICATION CHIP (CIC) SOCKET AND AN ECD CONNECTOR (DB-25 FEMALE).

7. UPON THE FAILURE OF A MODULE IN SLOTS M1-M3 THE AUTOMATIC TRANSFER UNIT SWITCHES TO THE STANDBY MODULES IN SLOTS M4-M6.

NEW WORK

SAFETRAN systems

PROJECT #: IL2006829
DES/CHRD BY: DPL/SWS
DATE: 05-01-06

CSX TRANSPORTATION
RAIL TRANSPORT GROUP ENGINEERING
COMMUNICATIONS AND SIGNALS

CP GALE TO WILLOWS
FOURTH ST. (540402B)
DETECTION DEVICE CONSIST CWE-9B
BROWNSTOWN, IL M.P. 05-163.9B

4K-CHASSIS.DGN
REV. 12-22-06

DESIGNED	DIGITIZED	CHECKED	DATE
SAF/DPL	SAF/DPL	SAF/SWS	05-01-06

DESIGN DATE	REV. NO.	DRAWING	SHEET NO	FILE	SHEET
05-01-06	1	-----	-----	0516390	C01

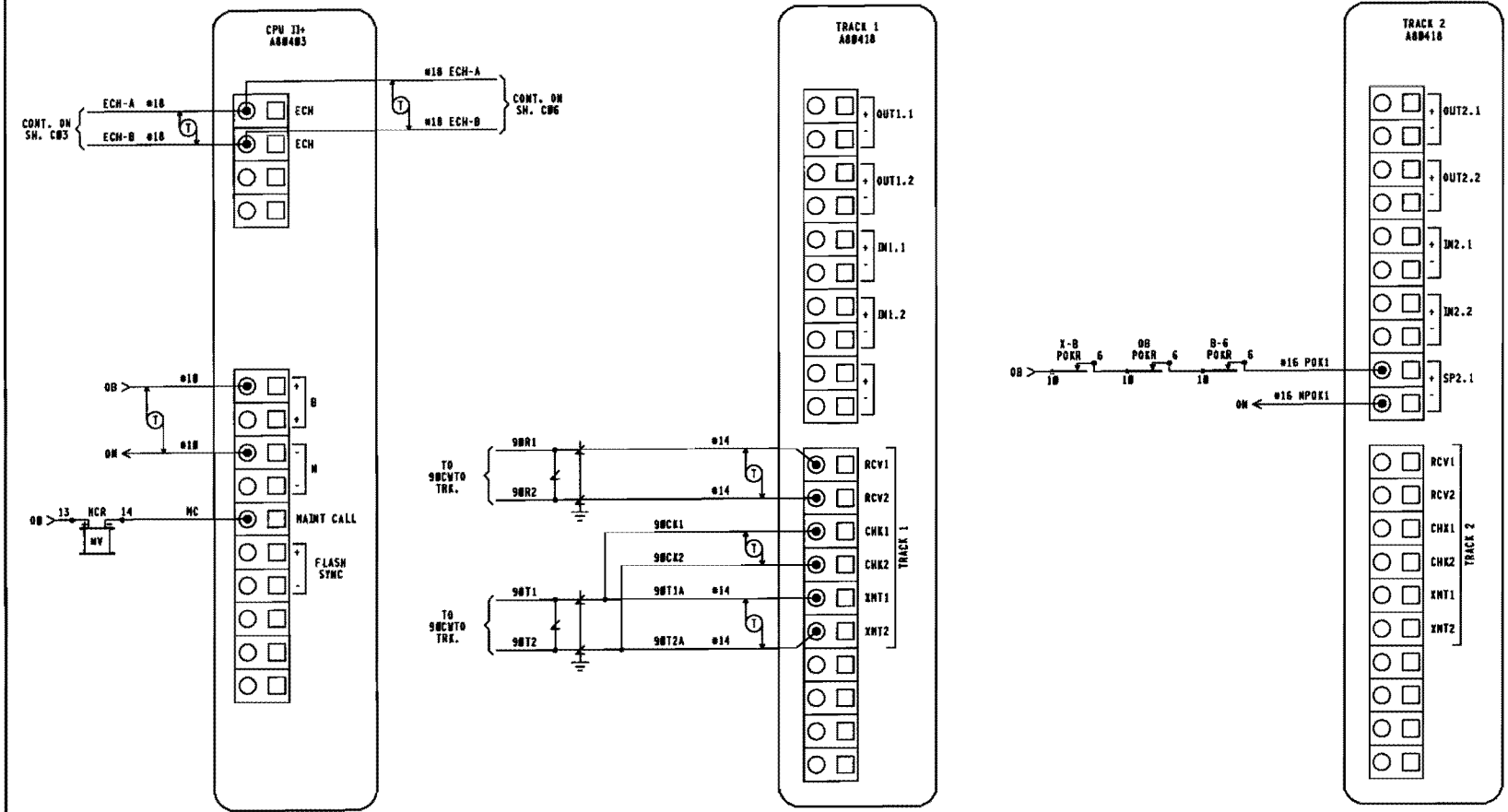

NOTE:

ECHELON CONNECTIONS NOT TO EXCEED 53' IN LENGTH AND TOTAL LENGTH COMBINED NOT TO EXCEED 430' WITH A MAXIMUM OF 8 NODES. RECOMMEND USE BELDEN WIRE CABLE #8461 OR EQUIVALENT.

NEW WORK

SAFETRAN systems

PROJECT #: IL2006029
DES/CHKD BY: DPL/SWS
DATE: 05-01-08

THIS PLAN DOES ☐ DOES NOT ☒
SUPERSEDE PLAN DATED 02-20-07
CSX PROJECT # IL2006035

4K-TERMINALS.DGN
REV. 02-29-08

CSX TRANSPORTATION

RAIL TRANSPORT GROUP ENGINEERING
COMMUNICATIONS AND SIGNALS

CP GALE TO WILLOWS

FOURTH ST. (546402N)

DETECTION CIRCUITRY CWE-90

BROWNSTOWN, IL M.P. QS-163.90

DESIGNED	DIGITIZED	CHECKED	DATE
SAF/DPL	SAF/DPL	SAF/SWS	05-01-08

DESIGN DATE	REV. NO.	DRAWING	SHEET NO	FILE	SHEET
05-01-08	1	-----	-----	QS16390	C02

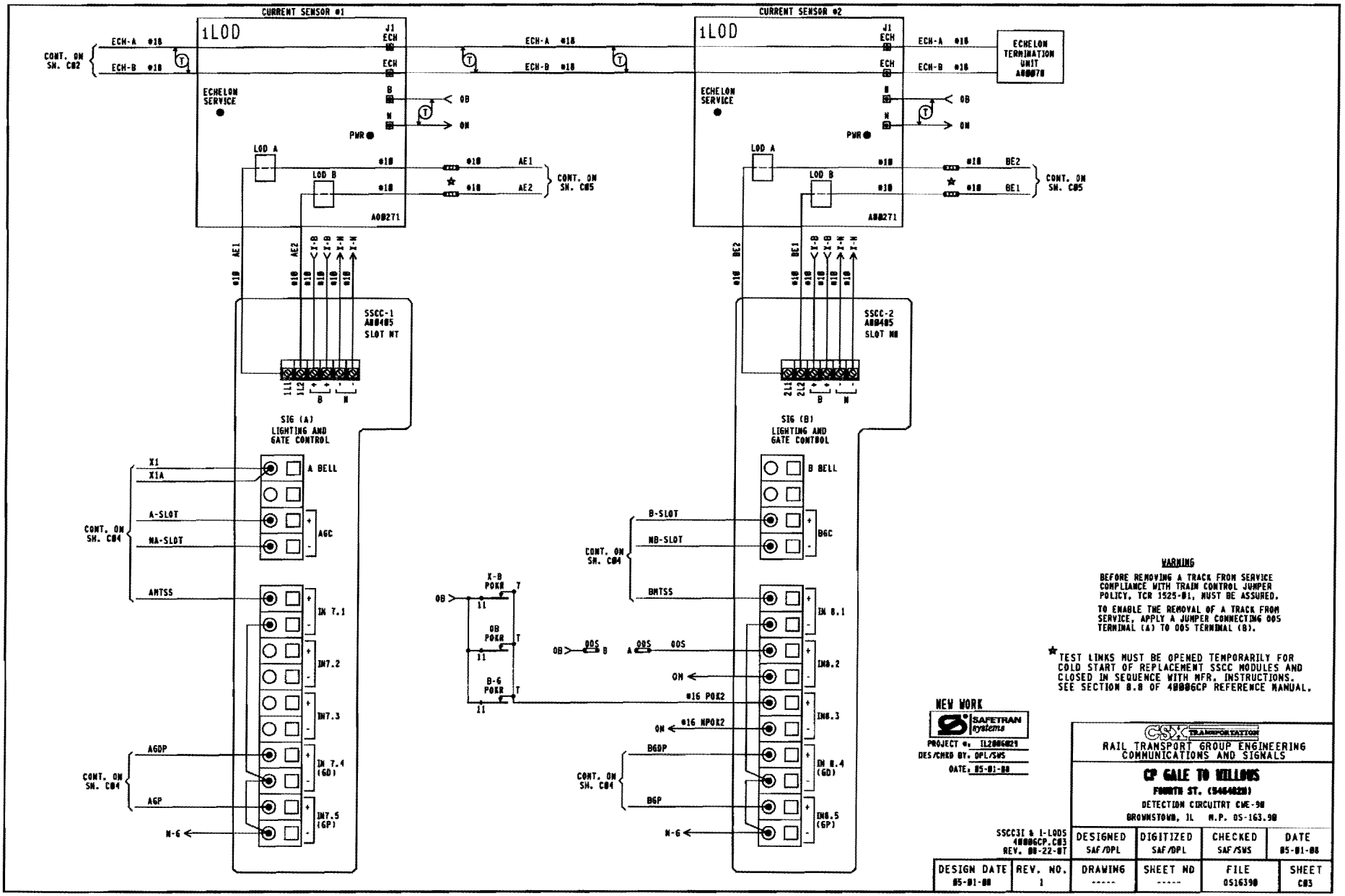

WARNING

BEFORE REMOVING A TRACK FROM SERVICE COMPLIANCE WITH TRAIN CONTROL JUMPER POLICY, TCR 1525-01, MUST BE ASSURED.

TO ENABLE THE REMOVAL OF A TRACK FROM SERVICE, APPLY A JUMPER CONNECTING OOS TERMINAL (A) TO OOS TERMINAL (B).

★ TEST LINKS MUST BE OPENED TEMPORARILY FOR COLD START OF REPLACEMENT SSCC MODULES AND CLOSED IN SEQUENCE WITH MFR. INSTRUCTIONS. SEE SECTION 8.8 OF 40006CP REFERENCE MANUAL.

NEW WORK

SAFETRAN systems

PROJECT #: IL2006029
DES/CHKD BY: DPL/SWS
DATE: 05-01-08

CSX TRANSPORTATION

RAIL TRANSPORT GROUP ENGINEERING
COMMUNICATIONS AND SIGNALS

CP GALE TO WILLOWS

FOURTH ST. (5464020)

DETECTION CIRCUITRY CWE-98

BROWNSTOWN, IL M.P. OS-163.90

SSCC3I & I-LODS
40006CP.C03
REV. 00-22-07

DESIGN DATE	REV. NO.	DRAWING	SHEET NO	FILE	SHEET
05-01-08	1	-----	-----	0516390	C03

DESIGNED	DIGITIZED	CHECKED	DATE
SAF/DPL	SAF/DPL	SAF/SWS	05-01-08

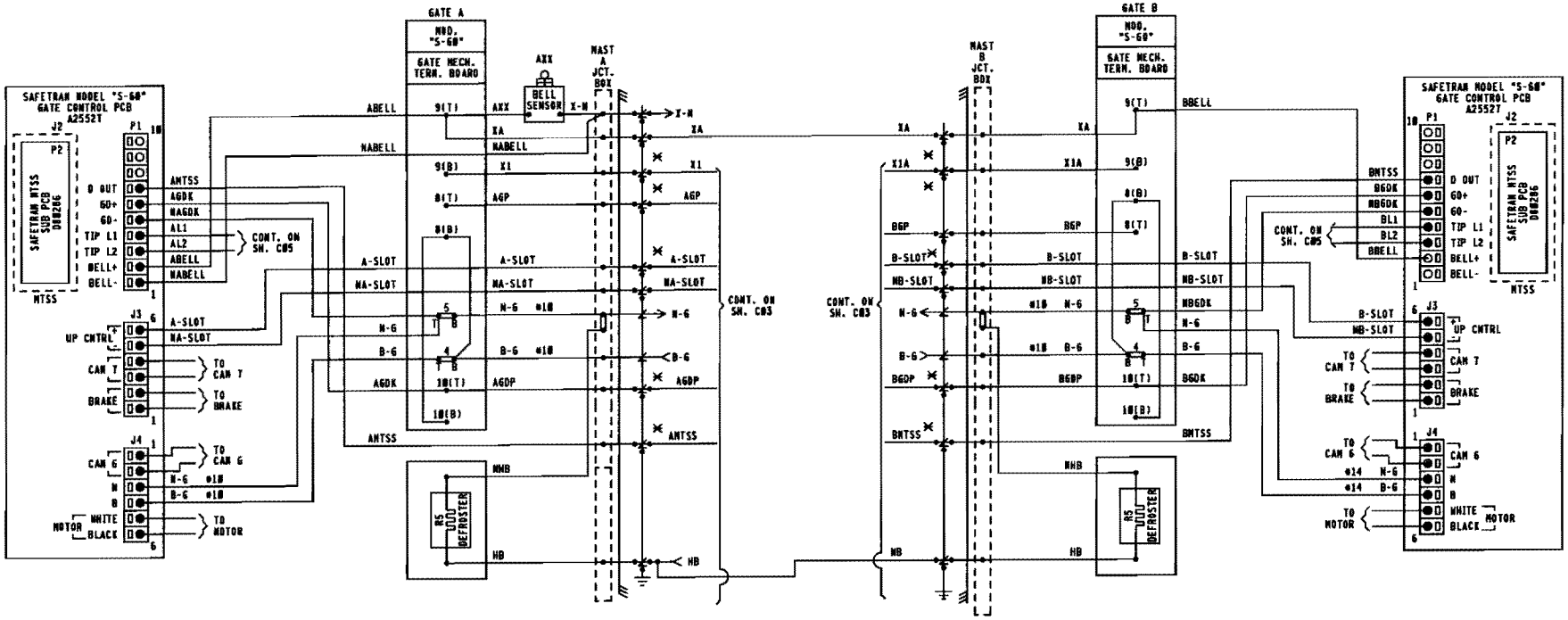

NOTES.
1. ✕ = TEST LINKS MUST BE OPEN TEMPORARILY FOR COLD START OF REPLACEMENT SSCC MODULES AND AND CLOSED IN SEQUENCE WITH MFR. INSTRUCTIONS. SEE SECTION 0.0 OF 40006CP REFERENCE MANUAL.
2. = TERMINAL IN JCT. BOX BASE
3. ALL WIRING #16 UNLESS NOTED OTHERWISE.

NEW WORK

SAFETRAN systems

PROJECT #: IL2006029
DES/CHKD BY: DPL/SWS
DATE: 05-01-08

CSX TRANSPORTATION

RAIL TRANSPORT GROUP ENGINEERING
COMMUNICATIONS AND SIGNALS

CP GALE TO WILLOWS

FOURTH ST. (548462R)

CROSSING WARNING DEVICE GATE CIRCUITRY

BROWNSTOWN, IL M.P. QS-163.98

S60 GATE WIRING.C04A
REV 09-05-07

DESIGNED	DIGITIZED	CHECKED	DATE
SAF/DPL	SAF/DPL	SAF/SWS	05-01-08

DESIGN DATE	REV. NO.	DRAWING	SHEET NO	FILE	SHEET
05-01-08	1	-----	-----	QS16398	C04

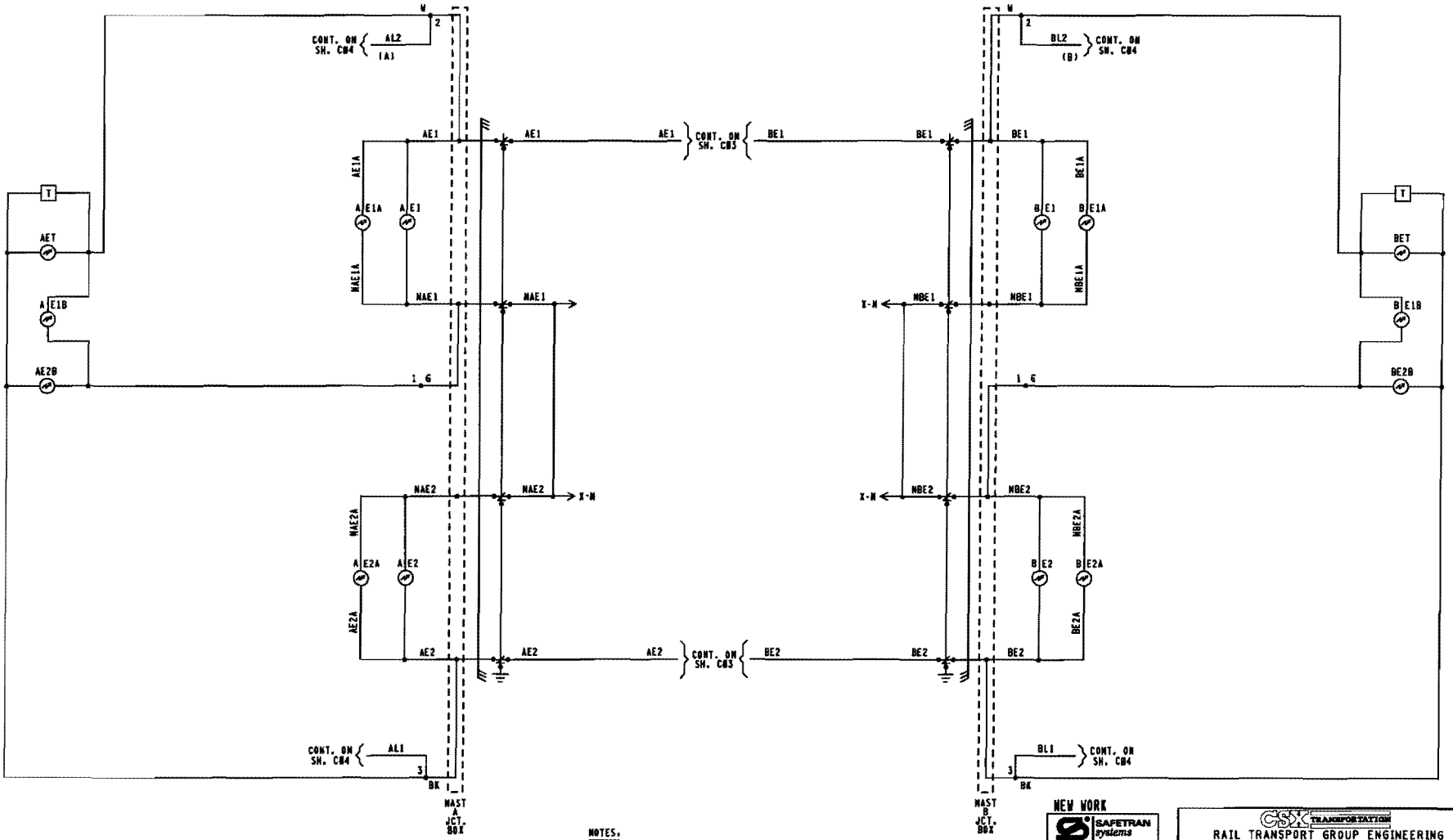

NOTES:

1. = TERMINAL IN JUNCTION BOX
2. WHEN 7 OR MORE LIGHTS ON A SINGLE STRUCTURE REFER TO SS302 FOR REQUIRED ARRESTERING
3. FEEDS TO ALL BUSSES AND LIGHT CIRCUITS ARE #10 FLEX
4. UNLESS NOTED ALL OTHER WIRING #16
5. CABLING SPECIFICATIONS SHOWN ON SH. S01
6. T = TIP SENSOR

NEW WORK

SAFETRAN systems

PROJECT #: IL2006829
DES/CHKD BY: DPL/SWS
DATE: 05-01-08

CSX TRANSPORTATION
RAIL TRANSPORT GROUP ENGINEERING
COMMUNICATIONS AND SIGNALS

CP GALE TO WILLOWS

FOURTH ST. (546402H)

CROSSING WARNING DEVICE LIGHT CIRCUITRY

BROWNSTOWN, IL M.P. 05-163.90

4K-LAMP WIRING.DGN
REV. 02-29-08

DESIGNED	DIGITIZED	CHECKED	DATE
SAF/DPL	SAF/DPL	SAF/SWS	05-01-08

DESIGN DATE	REV. NO.	DRAWING	SHEET NO	FILE	SHEET
05-01-08	1	-----	-----	051639B	C05

WAYSIDE ACCESS GATEWAY CONFIGURATION	
SITE ATCS ADDRESS	7.125.412.007.07.01 7.125.LLL.GGG.SS.DD
SERIAL INTERFACE	38,400,NONE,8,1/NOFLOW
SERIAL FORMAT	RAW
WAG TEST MODE	DISABLED
ECHELON ADDRESS	01.07
UDP PORTS	5000, 5001, 5002, 5003
ROUTE TABLE EXPIRY	5400 SEC
BROADCAST MEDIUM	IP ETHERNET
TCP PORTS	23, 10023, 6001, 6002
DHCP SERVER	DISABLED
IP ADDRESS	192.168.13.1
TYPE T ROUTE LENGTH	12--TRRLLLGGGSS
IP NETWORK MASK	255.255.255.0
WAG CIRCUIT ID	DISABLE
ROUTING REGION DOMAIN 1	DCGSERVER1.JAX.COM
ATCS SERVER UDP PORT NUMBER	6001
TELNET NUMBERS	WAG 6002, SERIAL 10023
DEFAULT GATEWAY IP	192.168.013.031

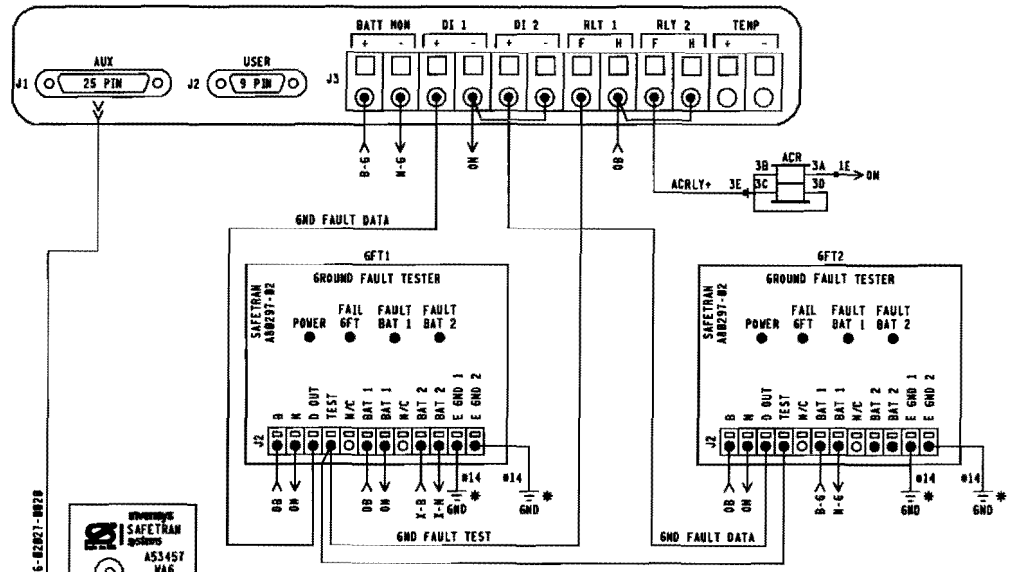

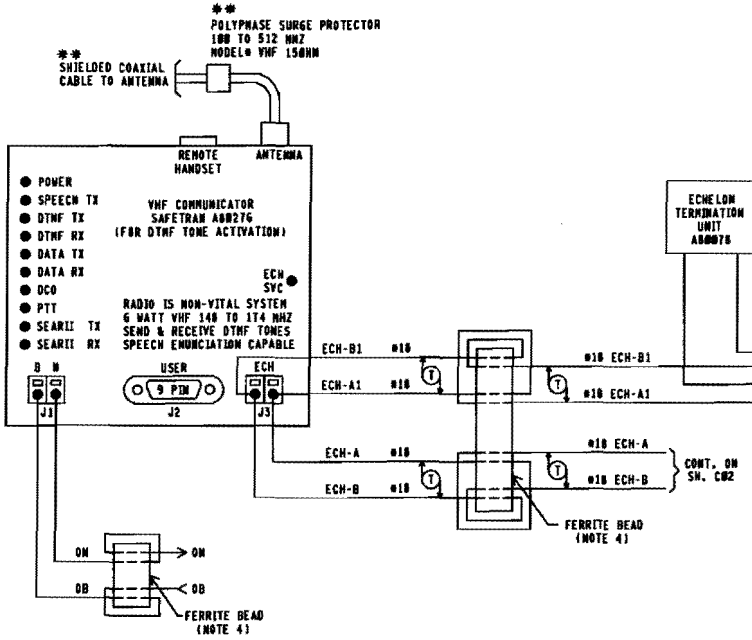

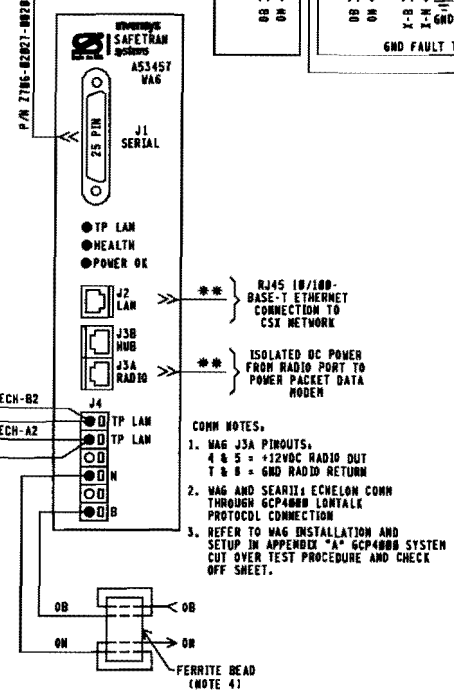

COMM NOTES:

1. WAG J3A PINOUTS:
   4 & 5 = +12VDC RADIO OUT
   T & B = GND RADIO RETURN
2. WAG AND SEARII: ECHELON COMM THROUGH GCP4000 LONTALK PROTOCOL CONNECTION
3. REFER TO WAG INSTALLATION AND SETUP IN APPENDIX "A" GCP4000 SYSTEM CUT OVER TEST PROCEDURE AND CHECK OFF SHEET.

GCP PROGRAMMING FOR VHF RADIO

REMOTE DTMF CROSSING ACTIVATION (ACTIVATES ENTIRE CROSSING)	
TO ACTIVATE PRESS:	482#
TO DE-ACTIVATE PRESS:	482*
(ACTIVATION WILL TIME OUT AFTER 60 SEC.)	

REMOTE DTMF LIGHTING ACTIVATION (ACTIVATES FLASHING LIGHTS ONLY)	
TO ACTIVATE PRESS:	481#
TO DE-ACTIVATE PRESS:	481*
(ACTIVATION WILL TIME OUT AFTER 60 SEC.)	

NOTES:

1. ALL WIRING #16 UNLESS NOTED OTHERWISE.
2. * = EARTH GROUND REF. TERMINALS REQUIRED FOR DETECTION. DO NOT JUMPER TERMINALS. MUST BE CONNECTED TO DIFFERENT POINTS OF BUNGALOW.
3. ** = TO BE PROVIDED BY COMMUNICATIONS
4. LOOP WIRE THROUGH FERRITE BEAD TWICE.

NEW WORK

SAFETRAN systems

PROJECT #: JL2006829
DES/CHKD BY: DPL/SWS
DATE: 05-01-08

CSX TRANSPORTATION

RAIL TRANSPORT GROUP ENGINEERING
COMMUNICATIONS AND SIGNALS

CP GALE TO WILLOWS

FOURTH ST. (546402M)

CROSSING WARNING DEVICE CIRCUITRY

BROWNSTOWN, IL M.P. QS-163.90

40006CP.C06
REV. 02-29-08

DESIGN DATE	REV. NO.	DRAWING	SHEET NO	FILE	SHEET
05-01-08	1	-----	-----	QS16390	C06

DESIGNED	DIGITIZED	CHECKED	DATE
SAF/DPL	SAF/DPL	SAF/SWS	05-01-08

	DEFAULTS AND/OR STYLE	FIELD RECORD
SEAR II: EXECUTIVE PROGRAM	VERSION: 9V725A01	VERSION: _____
APPLICATION PROGRAM (IF LOADED)	VERSION: 9V864A01	VERSION: _____

NOTE TO INSPECTOR: AT IN SERVICE OF SEAR II: OR UPDATE OF ITS INTERNAL EXECUTIVE PROGRAM OR ITS CSXT APPLICATION PROGRAM, THE VERSION NUMBER OF EACH PROGRAM MUST BE INSERTED IN THE BLANK FIELDS.

SITE SET UP PROCEDURE	
FUNCTION	LED DISPLAY
DATE/TIME	XX-XX-XXXX XX:XX:XX
AUTOMACTIC DST ADJUSTMENT	YES
TIME ZONE	EASTERN
SITE NAME	FOURTH ST.
MILEPOST	05-163.90
DOT NUMBER	546482N
TESTER TYPE	CROSSING
DATE FORMAT	MM-DD-YYYY
TEMP FORMAT	FAHRENHEIT
INDICATE HOLD (SEC)	0
SITE TYPE	COLLECTOR
SITE ATCS ADDRESS	7.125.412.007.99.01 (7.RRR.LLL.GGG.99.01)
POLL ID	1
OFFICE ADDRESS	2.125.00.0000 (2.RRR.NN.DDDD)
FIELD COMM. DEVICE	VHF COMM. (ECHELON)
MODE	GEN/ATCS
WANS XID	ENABLED
OFFICE COMM. DEVICE	WAG (ECHELON)
USER PORT BAUD	9600
USER PORT DATA BITS	8
USER PORT PARITY	NONE
USER PORT STOP BITS	1
USER PORT FLOW CONTROL	NONE
AUX PORT BAUD	38,400
AUX PORT DATA BITS	8
AUX PORT PARITY	NONE
AUX PORT STOP BITS	1
AUX PORT FLOW CONTROL	NONE
COMM PORT BAUD	9600
COMM PORT DATA BITS	8
COMM PORT PARITY	NONE
COMM PORT STOP BITS	1
COMM PORT FLOW CONTROL	NONE

INSPECTOR NOTE:
CURRENT VALUES MAY VARY DEPENDANT ON FIELD CONDITIONS. MAKE UP PER ACTUAL READINGS FOR IN-SERVICE REVISION.

LIT BULB COUNT ON EACH CIRCUIT	NO.	TYPE OF BULB	CURRENT READING IN AMP. AT APPROX. 10.0 V ARRAY VOLTAGE
CURRENT SENSOR (1) AE1, LAMP SET UP	4	☐BULBS ■LED	4.0
CURRENT SENSOR (1) AE2, LAMP SET UP	4	☐BULBS ■LED	4.0
CURRENT SENSOR (2) BE1, LAMP SET UP	4	☐BULBS ■LED	4.0
CURRENT SENSOR (2) BE2, LAMP SET UP	4	☐BULBS ■LED	4.0

VHF RADIO CHANNELS			
1	161.130	5	161.550
2	160.730	6	160.705
3	160.560	7	160.705
4	160.060	8	160.705

NOTE 9

MENU → CONFIGURATION	
MODULE TYPE	WAG
MODULE NAME	DEFAULT
WAG ECHELON MODE	7

MEASURE BATTERY VOLTAGE AT INPUT		
BATTERY VOLTAGE	0B	_____ VOLTS
BATTERY VOLTAGE	X-B	_____ VOLTS
BATTERY VOLTAGE	B-G	_____ VOLTS

NOTE:
REFER TO WAG INSTALLATION AND SETUP IN APPENDIX "A" GCP4000 SYTEM CUT OVER, TEST PROCEDURE AND CHECK OFF SHEET.

CONTROL SYSTEM CONFIGURATION MENU QUESTIONS		
	OPTION	SELECTION
NOTE 1	RESET NAMES AND MODULES*	YES ☐ NO ☐
	RAILROAD NUMBER	125
	ENTRANCE GATES*	0 ☐ 1 ☐ 2 ■ 3 ☐ 4 ☐ 5 ☐ 6 ☐ 7 ☐ 8 ☐
NOTE 2	EXIT GATES*	0 ■ 1 ☐ 2 ☐ 3 ☐ 4 ☐
	GATE POSITION FAIL*	20 SECS.
	BATTERY BANKS*	1 ☐ 2 ■ 3 ☐
	BATT MON USED*	NO ☐ YES ■
	INTERNAL CROSSING CONTROLLERS*	0 ☐ 1 ☐ 2 ■
	EXTERNAL CROSSING CONTROLLERS*	0 ■ 1 ☐ 2 ☐
NOTE 3	VHF COMMUNICATOR*	YES ■ NO ☐
	ACTIVATION CODE	482
	ACTIVATION TIMEOUT	(60 SEC)
	iLOD MODULES*	0 ☐ 1 ☐ 2 ■ 3 ☐ 4 ☐
NOTE 4	ANY LED BULBS USED*	NO ☐ YES ■
	AUTO INSPECTIONS*	YES ■ NO ☐
NOTE 5	BELL SENSOR*	0 ☐ 1 ■ 2 ☐ 3 ☐ 4 ☐
	BELL SENSOR TSS 1*	NO ☐ YES ■
	BELL SENSOR TSS 2*	NO ■ YES ☐
	BELL SENSOR TSS 3*	NO ■ YES ☐
	BELL SENSOR TSS 4*	NO ■ YES ☐
	BELL SENSOR TSS 5*	NO ■ YES ☐
	BELL SENSOR TSS 6*	NO ■ YES ☐
	BELL SENSOR TSS 7*	NO ■ YES ☐
	BELL SENSOR TSS 8*	NO ■ YES ☐
	BELL ON*	GATES LOWERING ■ GATES MOVING ☐ ALWAYS ☐
	GFT'S	YES ■ NO ☐
	BATTERIES ON GFT1	1 ☐ 2 ■
NOTE 6	GATE TIP SENSORS*	YES ■ NO ☐
	RTU	NO ■ YES ☐
NOTE 7	VHF VOICE CHANNEL	1 ☐ 2 ☐ 3 ☐ 4 ☐ 5 ☐ 6 ☐ 7 ☐ 8 ☐
	DATA CHANNEL	1 ☐ 2 ☐ 3 ☐ 4 ☐ 5 ☐ 6 ☐ 7 ☐ 8 ☐
	FULL APPROACH MOVE ALARMS*	ACTIVATED ■ DO NOT ACTIVATE ☐

NOTE 8

EDIT DIGITAL INPUTS	■ NO	☐ YES
EDIT BATTERIES	■ NO	☐ YES
EDIT RELAYS	■ NO	☐ YES
EDIT INDICATOR LEDS	■ NO	☐ YES
EDIT TEST LED'S	■ NO	☐ YES
EDIT ILOD SENSOR	■ NO	☐ YES
EDIT VHF SETTINGS	■ NO	☐ YES

NOTES:
1. SELECT YES ON INITIAL SET-UP.
2. OPTION AVAILABLE IF GATES = YES
3. OPTION AVAILABLE IF VHF COMMUNICATOR = YES LAST 3 DIGITS OF DOT NUMBER.
4. OPTION AVAILABLE IF iLODS.
5. OPTION AVAILABLE IF BELL SENSORS.
6. OPTION AVAILABLE IF GATES.
7. OPTION AVAILABLE IF VHF RADIO.
8. ONLY YES IN SPECIAL CIRCUMSTANCES.
9. SELECT "MENU" THEN "CONFIGURATION" FROM SEAR II INTERFACE KEYPAD TO ACCESS MODULE CONFIGURATION MENU.

NEW WORK

SAFETRAN systems

PROJECT #: TL2006029
DES/CHKD BY: DPL/SWS
DATE: 05-01-00

◯ = NOTE

CSX TRANSPORTATION
RAIL TRANSPORT GROUP ENGINEERING
COMMUNICATIONS AND SIGNALS

CP GALE TO WILLOWS
FOURTH ST. (546482N)
SEAR II: CONFIGURATION & FUNCTIONS
BROWNSTOWN, IL M.P. 05-163.90

4000GCP.C07
REV. 10-26-06

DESIGNED	DIGITIZED	CHECKED	DATE
SAF/DPL	SAF/DPL	SAF/SWS	05-01-00

DESIGN DATE	REV. NO.	DRAWING	SHEET NO	FILE	SHEET
05-01-00	1	-----	-----	Q516390	C07

Minimum Program Steps Report

Location and SIN

DOT Number: 546482M
Milepost Number: QS-163.90
Site Name: FOURTH ST

SIN: 712541200716 *

* Parameter is part of office check number calculation.

MCF and Template Selection

MCF Name: GCP-T6X-01-2.mcf
MCF Revision: 012
MCFCRC: 0DFE7A0C

Template = 1A.6 Trk B1 *

* Parameter is part of office check number calculation.

Minimum Program Steps

TEMPLATE: track 1-B1, Island
Track 1 . GCP Frequency = 151 Hz
Track 1 . Approach Distance = 2824 ft See Plans
Track 1 . Prime Warning Time = 25 sec *
Track 1 . GCP Transmit Level = High Set in Field
Track 1 . Isl Frequency = 4.9 kHz

TEMPLATE: SSCC
SSCC-1 Number of GDs = 1 *
SSCC-2 Number of GPs = 1 *
SSCC-2 Number of GDs = 1 *

TEMPLATE: IP assignment SSCC
IN 7.2 = Not Used *
IN 8.2 = Out Of Service IP 1 *
IN 8.4 = GD 2.1 *
IN 8.5 = GP 2.1 *

TEMPLATE: SEAR
SP 3.1 = Not Used *

GCP: track 1
Track 1 . GCP Freq Category = Other *
Track 1 . Island Distance = 120 ft *

ADVANCED: out of service
OOS Control = Display+OOS IPs *

ADVANCED: site options
Daylight Savings = On *

SSCC: 1
SSCC-1 Gate Delay = 5 sec *
SSCC 1 . Flash Rate = 55 *
SSCC 1 . Lamp Neutral Test = Off *

SSCC: 2
SSCC-2 Gate Delay = 5 sec *
SSCC 2 . Flash Rate = 55 *
SSCC 2 . Lamp Neutral Test = Off *

* Parameter is part of office check number calculation.

Check Numbers

Office Check Number: 548CCF7C
Config. Check Number: 30DD2B0D
(Based on MCF Revision 012)

Parameters not part of office check number calculation:

Track 1 . GCP Frequency = 151 Hz
Track 1 . Approach Distance = 2824 ft See Plans
Track 1 . GCP Transmit Level = High Set in Field
Track 1 . Isl Frequency = 4.9 kHz

NEW WORK
SAFETRAN systems
PROJECT #: IL2006029
DES/CHKD BY: DPL/SWS
DATE: 05-01-08

THIS PLAN DOES ☐ DOES NOT ☒
SUPERSEDE PLAN DATED: 02-20-07
CSX PROJECT #: IL2006035

4000GCP.P01
REV. 01-28-08

CSX TRANSPORTATION
RAIL TRANSPORT GROUP ENGINEERING
COMMUNICATIONS AND SIGNALS

CP GALE TO WILLOWS
FOURTH ST. (546482M)
MINIMUM PROGRAM STEPS REPORT CWE-98
BROWNSTOWN, IL M.P. QS-163.90

DESIGNED	DIGITIZED	CHECKED	DATE
SAF/DPL	SAF/DPL	SAF/SWS	05-01-08

DESIGN DATE	REV. NO.	DRAWING	SHEET NO	FILE	SHEET
05-01-08	1	-----	-----	QS16390	P01

HARMON INDUSTRIES, INC.

INDEX

SH. NO.	CONTENTS	REVISION NO. 1	2	3	4	5	6	7
1	TITLE, NOTES, INDEX AND REVISIONS	✓	✓					
2	LOCATION PLAN	✓	✓					
3	POWER DISTRIBUTION	✓						
4	300002 SAFETRAN GRADE CROSSING PREDICTOR CIRCUITS	✓						
5	GATE CONTROL, LIGHTING CIRCUITS AND CABLE TERMINATIONS	✓						
6	FRONT AND LEFT WALL LAYOUT	✓						
7	RIGHT SIDE OF HOUSE, RELAY RACK & FUNCTIONS	✓						
8	TERMINAL BOARD ARRANGEMENT	✓						
9	HOUSE LAYOUT	✓						

NOTES

▭ = FOR MATERIAL REFERENCE SEE PLAN S-1002

⊗ = DENOTES TWISTED PAIR
GROUND IN ACCORDANCE WITH CS-9001-A

REV	DATE	CKD BY
1	11/22/96	HEI

THIS PLAN DOES ☐ DOES NOT ☒ SUPERSEDE PLAN DATED 02-08-97 CSX PROJECT #: 1L2000655

SAFETRAN systems
PROJECT #: 3.2000829
DES/ADDED BY: BPL/GDS
DATE: 05-01-00
⊕⊕⊕ = IN
⊠⊠⊠ = OUT

REVISIONS

1 02-11-98
NEW PLAN DRAWN ACCOUNT WARNING DEVICES ADDED AT C.R. 17000E (THALMAN ROAD)
P.U.C. DUE DATE:
SYSTEM FILE NO:
WO/AFE NO: 48798 PFC NO.
IN SERVICE: 8-18-98
PER: RAG
GAB CSD OPL SWS SAF

2 05-01-00
NEW PLAN DRAWN ACCOUNT WARNING DEVICES ADDED AT FOURTH ST.
CSXT PROJECT NO: IL2000829
AFE/OP NO: IL8198
IN SERVICE:
PER:
REVISED:

AAR/DOT#546481F

CONRAIL

INDIANAPOLIS DIVISION — ST. LOUIS LINE

SEFTON TWP., ILLINOIS
C.R. 17000E (THALMAN ROAD)
TITLE, NOTES, INDEX AND REVISIONS

PHILADELPHIA, PA.

APPROVED: PE CAD
CHIEF ENGINEER - CAS

ISSUE DATE: 02-11-98 — 8486-1631

REV. 1 8-18-98 — SHEET 1 OF 9

2 05-01-00

2TKHXPCP.TBD

HARMON INDUSTRIES, INC.

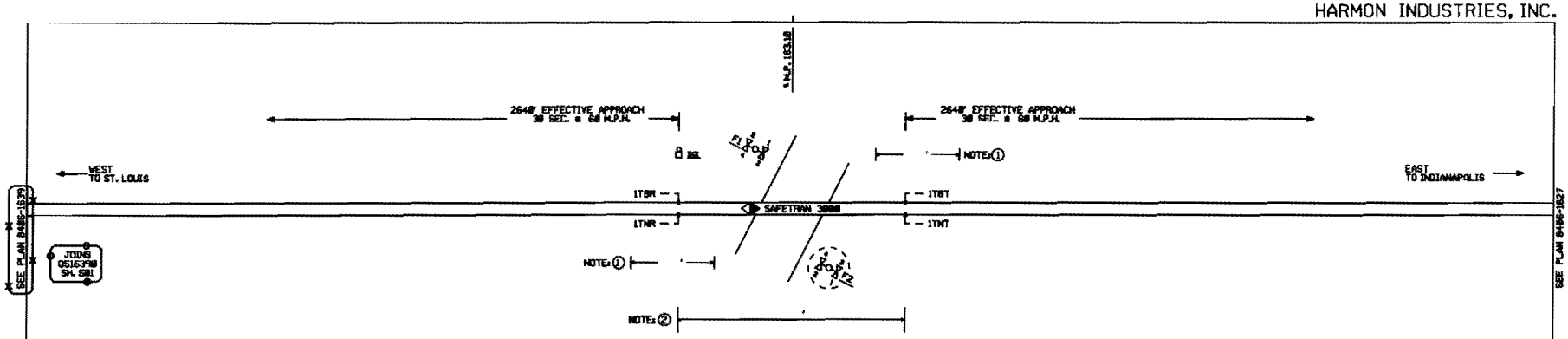

C.R. 1700E (THALMAN ROAD)

WARNING DEVICES TO BE INSTALLED IN
ACCORDANCE WITH THE M.U.T.C.D.

AAR/DOT# 546481F

4X6 HOUSE CABLES

4 (2 COND. #6), TWISTED U.G. CABLES TO TRACKS
1 (12 COND. #14), U.G. CABLE EAST
2 (4 COND. #8, TO FLASHERS
1 (2 COND. #12), TO #1 BELL
1 (3 COND. #24, TO SERVICE METER

NOTES:

① = 25' MINIMUM

② = 120' MINIMUM

③ EACH PAIR OF TRACK WIRES (TRANSMIT AND RECEIVE) SHOULD BE TWISTED AT LEAST TWO TURNS PER FOOT. THE TRANSMITTER PAIR SHOULD BE SEPARATED TO THE MAXIMUM EXTENT POSSIBLE FROM THE GCP RECEIVER PAIR BELOW GROUND AND IN INSTRUMENT HOUSING. TRANSMITTER WIRES MUST BE RUN TO THE NEAR SIDE OR BUNGALOW SIDE OF THE CROSSING.

REV	DATE	CKD BY
1	11/22/96	HEI

THIS PLAN DOES ☐ DOES NOT ☒
SUPERSEDE PLAN DATED 02-11-97
CSX PROJECT #: ILXXXXXX

SAFETRAN systems
PROJECT #: ILXXXXXX
DES/ADMN BY: RPL/SRS
DATE: 00-11-98

CONRAIL

C.R. 1700E (THALMAN ROAD) SEFTON TWP., ILLINOIS

HIGHWAY CROSSING
LOCATION PLAN

ISSUE DATE: 02-11-98 | 8486-1631

REV. 1 8-18-98 | SHEET 2

2 05-01-98

2TK00XPCP.T8D

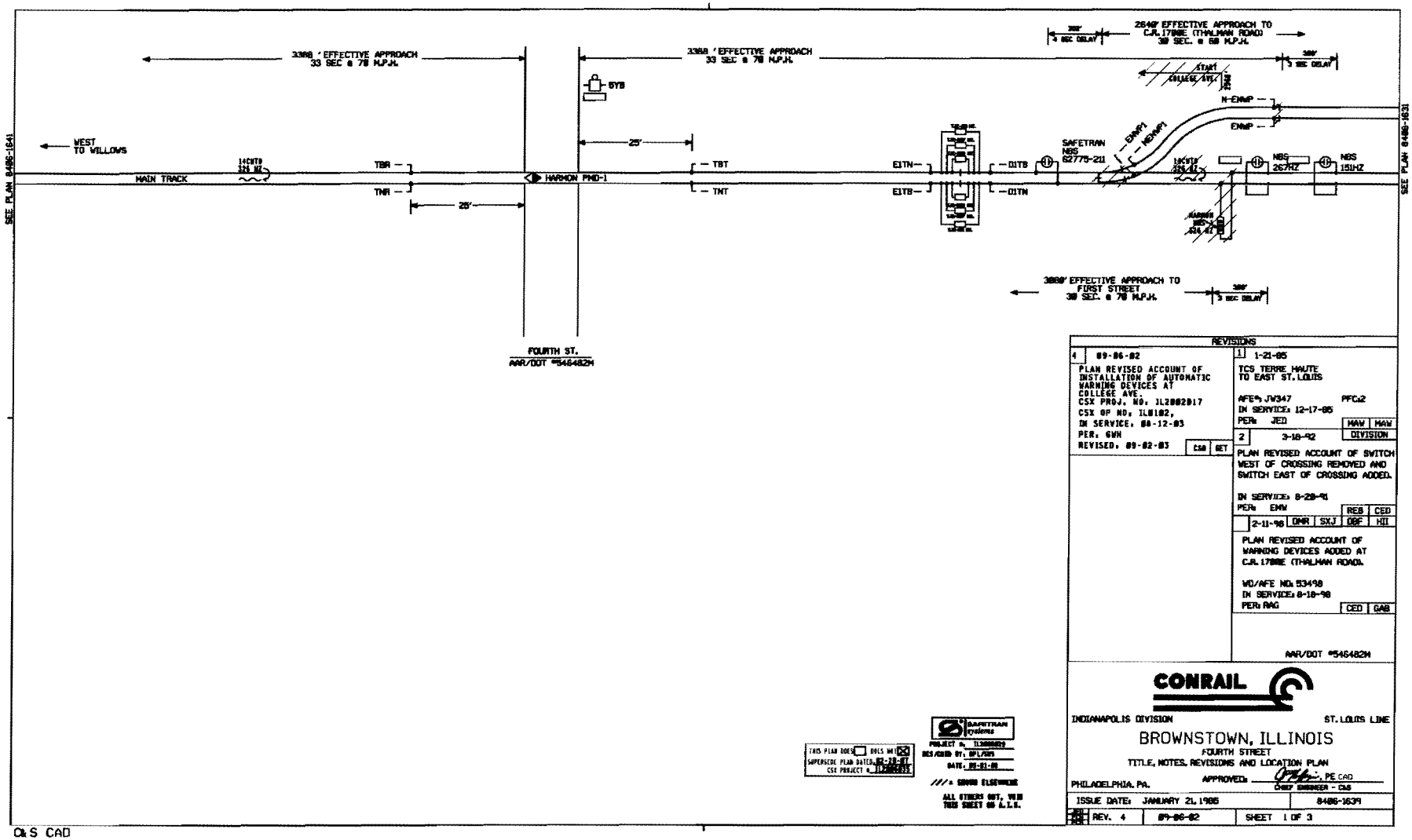

REVISIONS	
4 — 09-06-02 PLAN REVISED ACCOUNT OF INSTALLATION OF AUTOMATIC WARNING DEVICES AT COLLEGE AVE. CSX PROJ. NO. IL2002017 CSX OP NO. IL0102, IN SERVICE. 08-12-03 PER. GWH REVISED. 09-02-03 — CSM / BET	1 — 1-21-85 TCS TERRE HAUTE TO EAST ST. LOUIS AFE#: JV347 PFC.2 IN SERVICE: 12-17-85 PER: JED — MAW / MAW 2 — 3-18-92 — DIVISION PLAN REVISED ACCOUNT OF SWITCH WEST OF CROSSING REMOVED AND SWITCH EAST OF CROSSING ADDED. IN SERVICE: 8-28-91 PER: EMW — REB / CED 2-11-98 — DMR / SXJ / DBF / HII PLAN REVISED ACCOUNT OF WARNING DEVICES ADDED AT C.R. 1700E (THALMAN ROAD. WO/AFE NO: 53498 IN SERVICE: 8-18-98 PER: RAG — CED / GAB AAR/DOT #546482M

CONRAIL

INDIANAPOLIS DIVISION — ST. LOUIS LINE

BROWNSTOWN, ILLINOIS

FOURTH STREET

TITLE, NOTES, REVISIONS AND LOCATION PLAN

PHILADELPHIA, PA. — APPROVED: _____, PE CAD, CHIEF ENGINEER - CMS

ISSUE DATE: JANUARY 21, 1985 — 8486-1639

REV. 4 — 09-06-02 — SHEET 1 OF 3

THIS PLAN DOES ☐ DOES NOT ☒ SUPERSEDE PLAN DATED 02-22-07 CSX PROJECT # IL2002017

SAFETRAN systems — PROJECT #: IL2002017 — DES/CHKD BY: DPL/GPS — DATE: 09-01-03

SHOWN ELSEWHERE

ALL OTHERS OUT, THIS SHEET ON L.I.S.

Ok S CAD

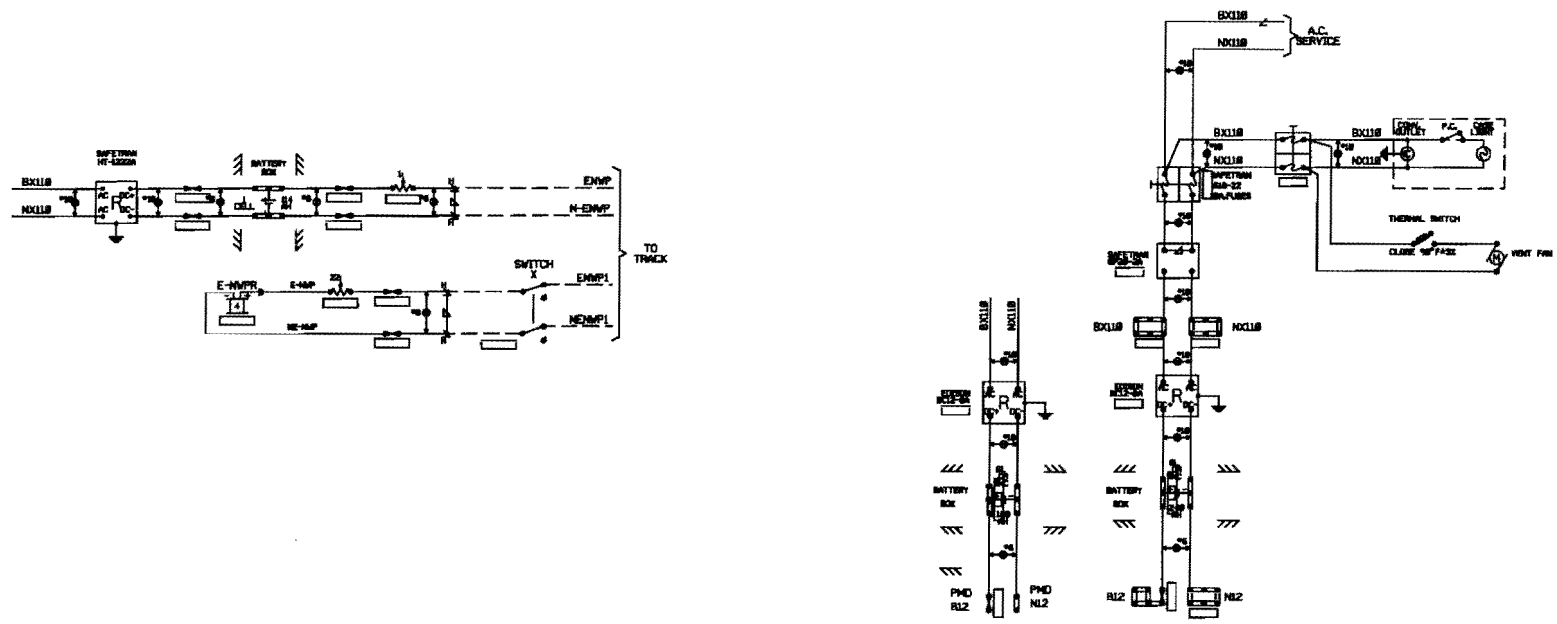

THIS PLAN DOES ☐ DOES NOT ☒
SUPERSEDE PLAN DATED
CSX PROJECT #

SAFETRAN systems
PROJECT #
DESIGNED BY: MPL/SIS
DATE:
ALL DOT, VOID
THIS SHEET ON A.L.S.

CONRAIL

FOURTH STREET — BROWNSTOWN, ILLINOIS

POWER DISTRIBUTION

ISSUE DATE: JANUARY 21, 1985		8486-1639
REV. 2	8-18-98	SHEET 2

C&S CAD

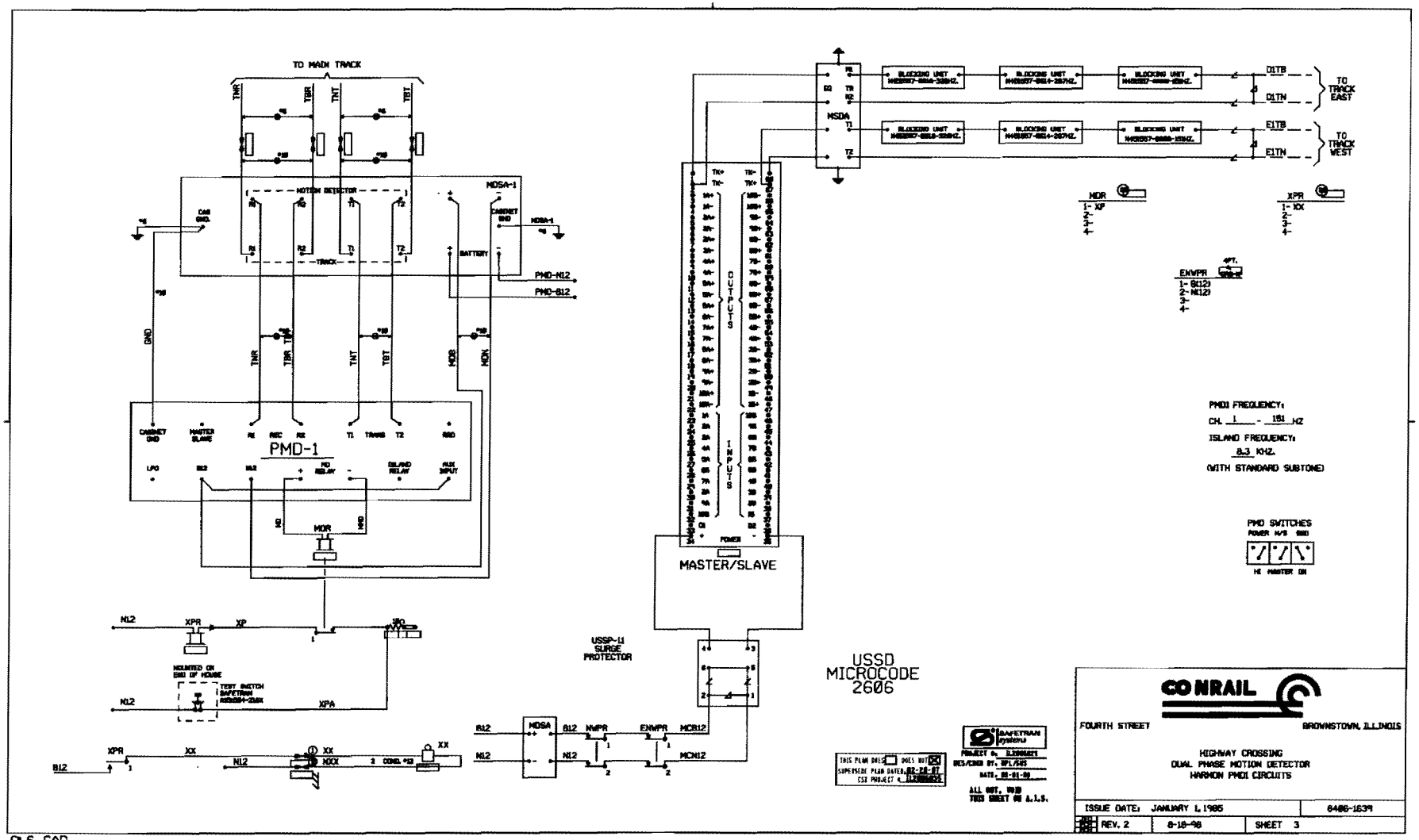
TO MAIN TRACK
MOTION DETECTOR
TRACK
MDSA-1
CABINET GND
BATTERY
PMD-N12
PMD-B12
GND
TNR
TBR
TNT
TBT
MDB
MDN
PMD-1
CABINET GND
MASTER SLAVE
REC
TRANS
RRD
LPO
MD RELAY
ISLAND RELAY
AUX INPUT
MDR
N12
XPR
XP
XPA
MOUNTED ON END OF HOUSE
TEST SWITCH SAFETRAN
B12
XX
NXX
COND. #12
USSP-11 SURGE PROTECTOR
MDSA
NWPR
ENWPR
MCB12
MCN12
MASTER/SLAVE
OUTPUTS
INPUTS
POWER
MSDA
BLOCKING UNIT
D1TB
D1TN
E1TB
E1TN
TO TRACK EAST
TO TRACK WEST
MDR
1- XP
2-
3-
4-
XPR
1- XX
2-
3-
4-
ENWPR
1- B(12)
2- N(12)
3-
4-
PMD1 FREQUENCY:
CH. 1 - 151 HZ
ISLAND FREQUENCY:
8.3 KHZ.
(WITH STANDARD SUBTONE)
PMD SWITCHES
POWER H/S GND
HI MASTER ON
USSD
MICROCODE
2606
THIS PLAN DOES DOES NOT
SUPERSEDE PLAN DATED
CSX PROJECT #
SAFETRAN systems
PROJECT #
DES/CHKD BY
DATE
ALL OUT, VOID
THIS SHEET ON A.I.S.
CONRAIL
FOURTH STREET
BROWNSTOWN, ILLINOIS
HIGHWAY CROSSING
DUAL PHASE MOTION DETECTOR
HARMON PMD1 CIRCUITS
ISSUE DATE: JANUARY 1, 1985
8406-1639
REV. 2
8-18-98
SHEET 3
D&S CAD
(100,101)HXPMD1.DGN

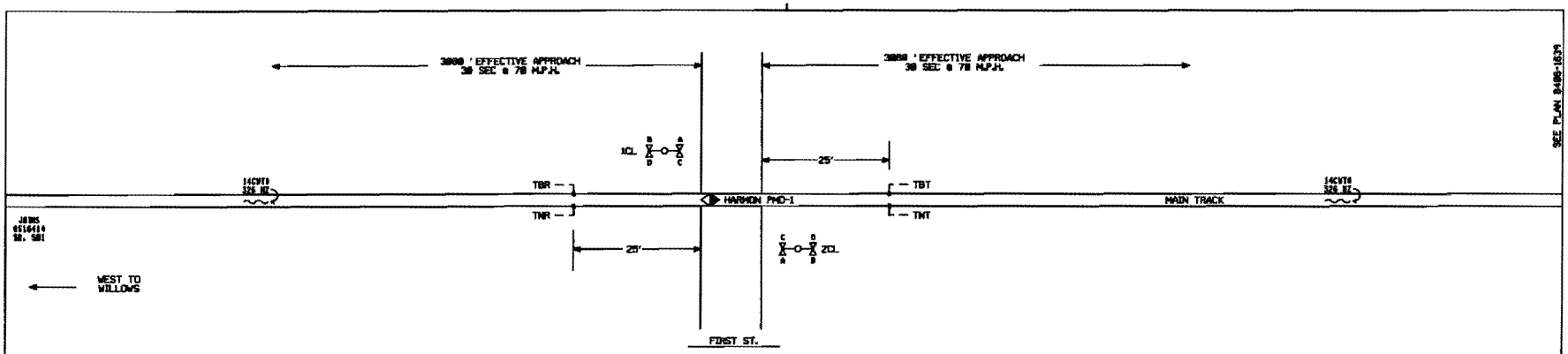

REVISIONS	
1	1-25-85 TCS TERRE HAUTE TO EAST ST. LOUIS AFE#: JW347 PFC:2 IN SERVICE: 12-17-85 PER: J.E.D. CLW CLW
2	09-06-02 PLAN REVISED ACCOUNT OF INSTALLATION OF AUTOMATIC WARNING DEVICES AT COLLEGE AVE. CSX PROJ. NO. IL2002017 CSX OP NO. IL0102, IN SERVICE: 08-12-03 PER: GWH REVISED: 09-02-03 CSW GET

SAFETRAN systems
PROJECT #: IL2002029
DES/CHKD BY: BPL/SJS
DATE: 05-01-08

ALL OUT, VOID
THIS SHEET ON A.I.S.

CONRAIL

SOUTHERN REGION
AVENA, ILL.

GREAT LAKES DIVISION
ST. LOUIS LINE

FIRST ST.
HIGHWAY CROSSING WARNING DEVICES-LOCATION PLAN

AAR:546483U
PHILADELPHIA, PA.

APPROVED: PSP CAD
CHIEF ENGINEER-C & S

ISSUE DATE: 1-25-85 | 8406-1641

REV. 2 | 09-06-02 | SHEET 1 OF 4

REV	DATE	CKD BY

D&S CAD

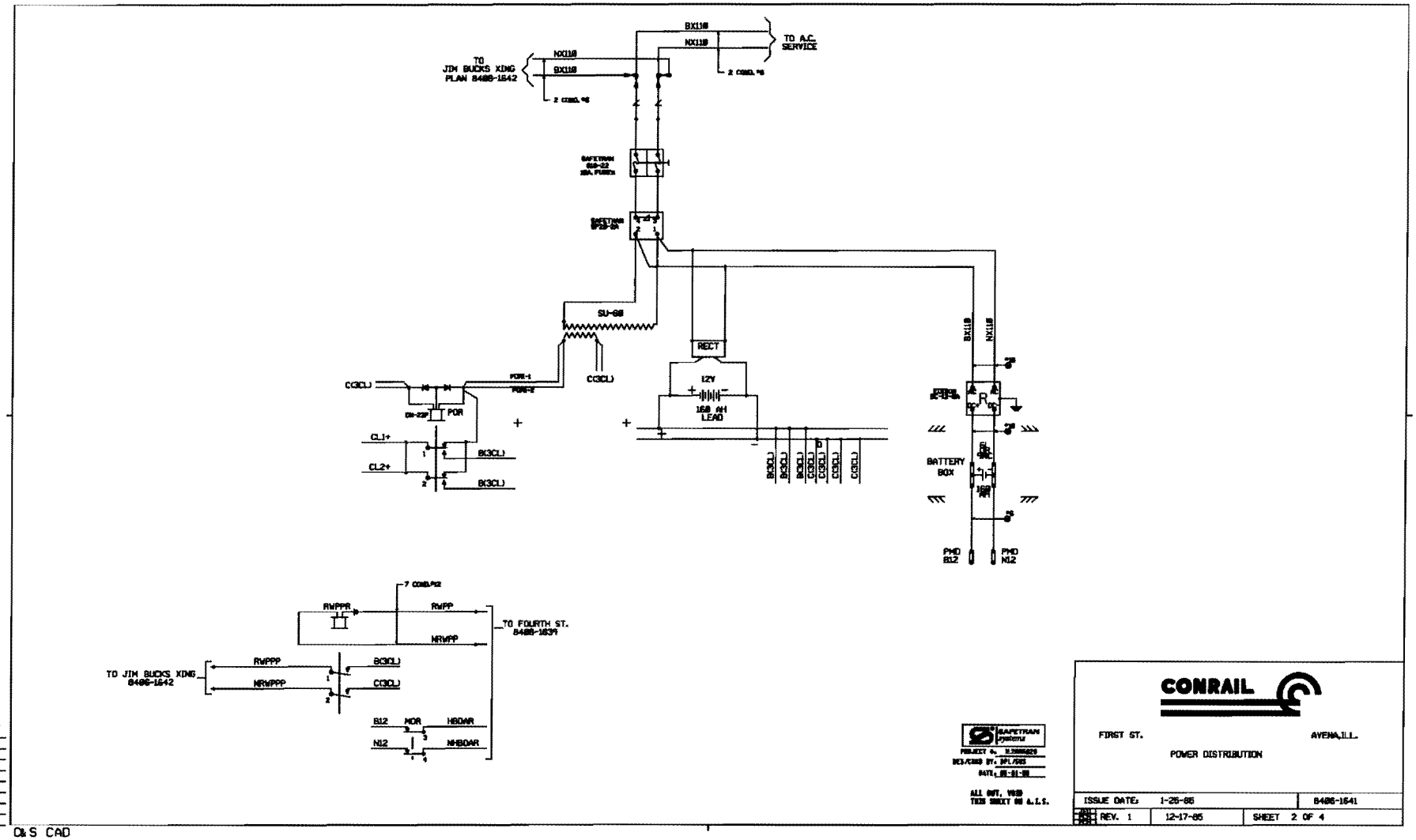

REV	DATE	CKD BY

D&S CAD

SAFETRAN systems

PROJECT #: [illegible]
DES/CADD BY: [illegible]
DATE: [illegible]

ALL OUT, VOID THIS SHEET ON A.I.S.

CONRAIL

FIRST ST. AVENA, ILL.

POWER DISTRIBUTION

ISSUE DATE:	1-26-85	8406-1641
REV. 1	12-17-85	SHEET 2 OF 4

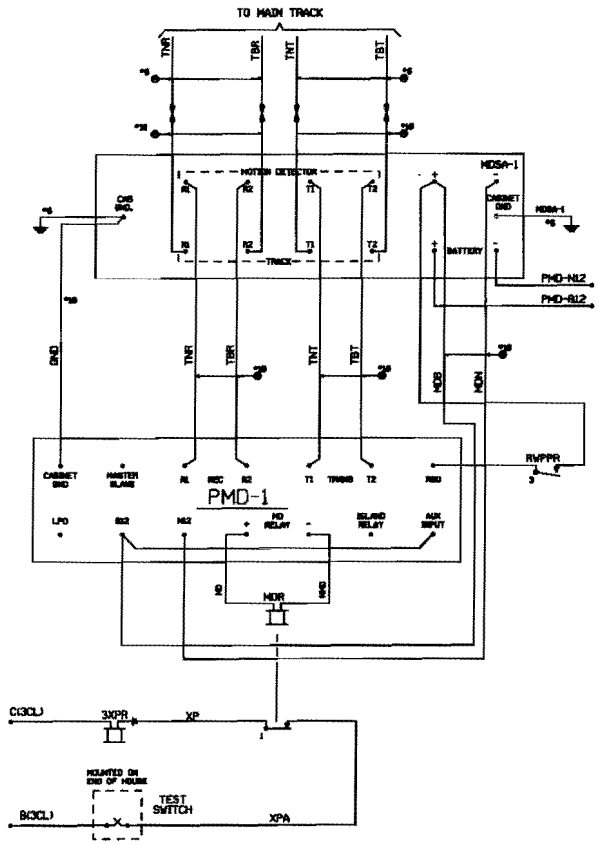

RELAY FUNCTIONS

RWPPR	MDR	1 MDR	3XPR	POR	3LR
1- RWPPP	1- XP	1- XP	1- POEL1	1- CL1	1- CL2-
2- NRWPPP	2-	2- HBDAR	2-	2- CL1	2- CL2-
3- RWPPR	3-	3- NHBDAR	HD3- CL3+	3-	3- CL2-
4-	4-	4-	HD4- CL4+	4-	4- CL2-
			5-		
			6- LR1		

PMD1 FREQUENCY:
CH. 2 - 267 HZ
ISLAND FREQUENCY:
5.9 KHZ.
(WITH STANDARD SUBTONE)

PMD SWITCHES
POWER M/S RBD
HI MASTER OFF

REV	DATE	CKD BY

CONRAIL

FIRST ST. AVENA, ILL.

HIGHWAY CROSSING
DUAL PHASE MOTION DETECTOR
HARMON PMD1 CIRCUITS

GAMETRAN systems
PROJECT #: [illegible]
DES/CHKD BY: DPL/SSS
DATE: 05-01-86
ALL DIST. VOID THIS SHEET ON A.L.S.

ISSUE DATE: 1-25-85		8406-1641
REV. 1	12-15-85	SHEET 3 OF 4

C&S CAD

[100.101]HXPMD1.DGN

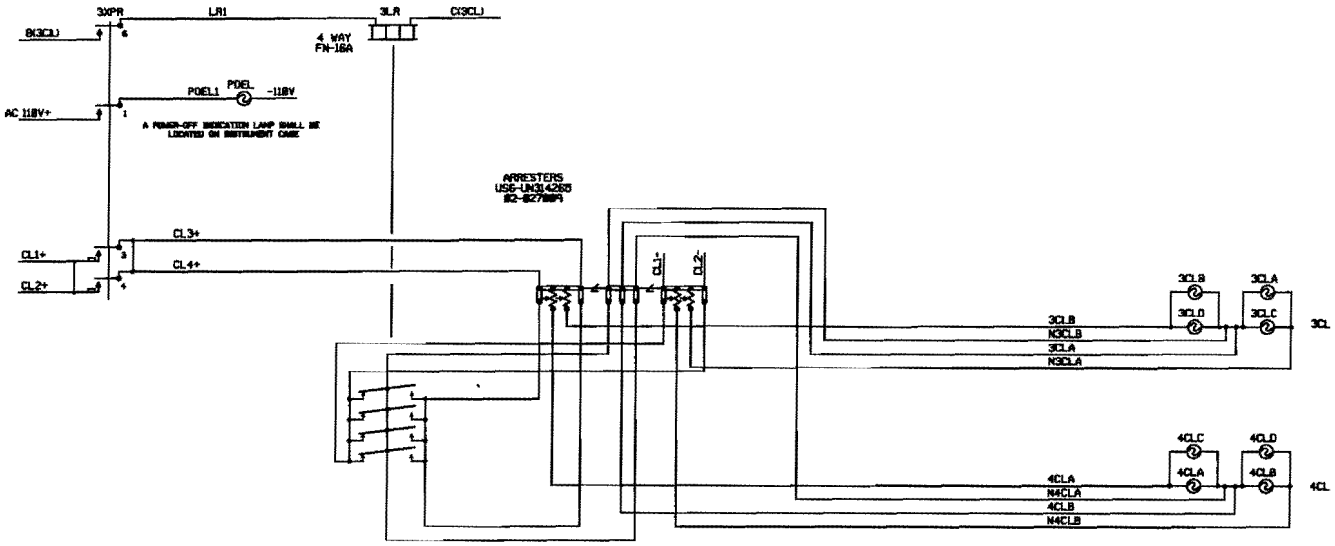

REV	DATE	CKD BY

SAFETRAN systems
PROJECT #: [illegible]
DES/CHKD BY: [illegible]
DATE: [illegible]
ALL OUT, VOID THIS SHEET ON A.L.S.

CONRAIL

FIRST ST. AVENA, ILL.

HIGHWAY CROSSING FLASHER ARRANGEMENT

ISSUE DATE: 1-26-85		8406-1641
REV. 1	12-15-85	SHEET 4 OF 4

C&S CAD

INDEX

SH. NO.	CONTENTS	REVISION NO. 1	2	3	4	5	6	7	8	9
IO1	INDEX AND REVISIONS	X	Ø							
SO1	TRACK AND SIGNAL PLAN	X	Ø							
EO1	POWER DISTRIBUTION	X								
CO1	CROSSING DETECTION CIRCUITRY	X								
CO2	CROSSING WARNING DEVICE CIRCUITRY	X								
CO3	HAWK RECORDER CIRCUITS	X								
CO4	HAWK RECORDER PROGRAM	X								

X = PLANS SENT TO FIELD (DISTRIBUTED)

X = PLANS AS-IN-SERVICED (UP TO DATE)

THIS PLAN DOES ☐ DOES NOT ☒
SUPERSEDE PLAN DATED 02-20-87
CSX PROJECT # IL2006035

SAFETRAN systems
PROJECT #. IL2006029
DES/CHKD BY. DPL/SVS
DATE. 05-01-00
-O-O-O- = IN

REVISIONS

1	09-02-03 GET IL2002017

CSX TRANSPORTATION
RAIL TRANSPORT GROUP ENGINEERING
COMMUNICATIONS AND SIGNALS

CP GALE TO WILLOWS
BROWNSTOWN, IL
INDEX AND REVISIONS
COLLEGE AVE. 546 404B MP. 05-164.14

DESIGNED	DIGITIZED	CHECKED	DATE
GET/VPD	GET/CSN	GET/FAP	09-06-02

DRAWING	SHEET NO	NEXT SH	NEXT FILE	NEXT SH	FILE	SHEET
0406-1642	1	1-1	0S16414	SO1	0S16414	IO1

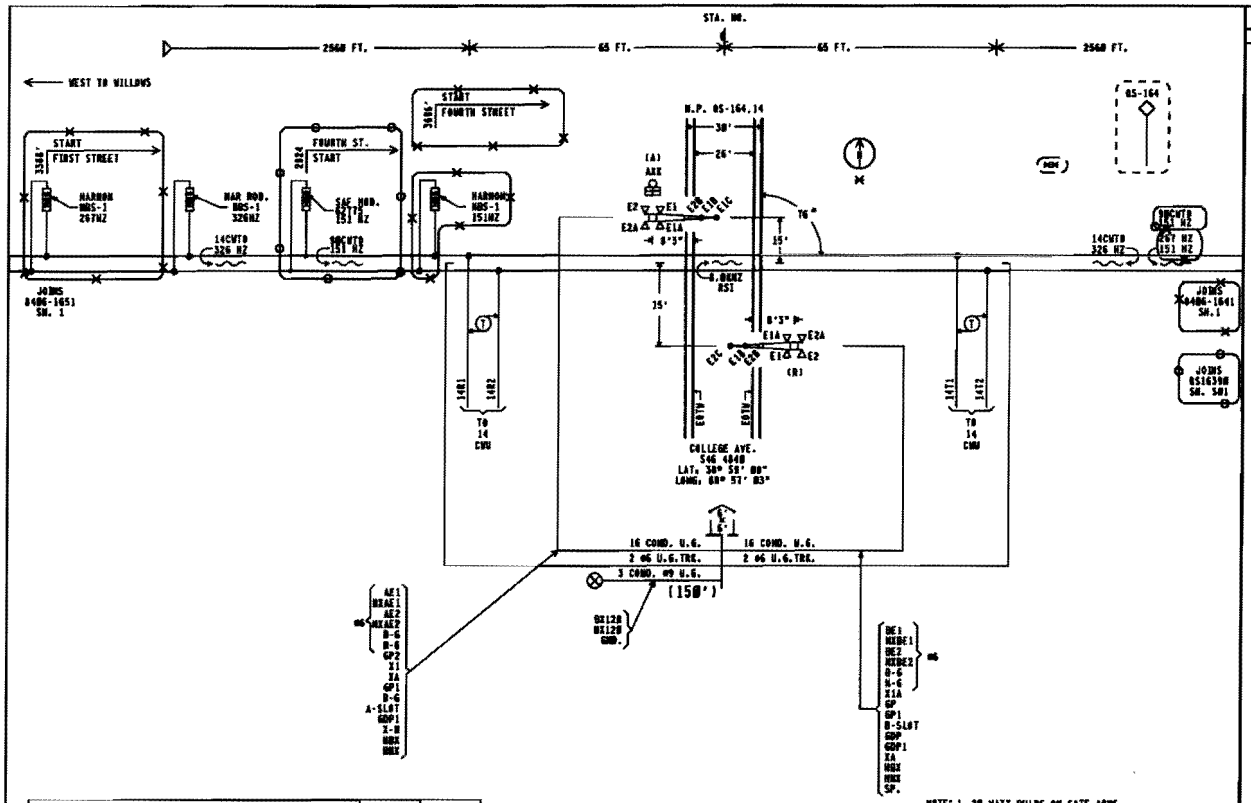

APPROACH LENGTHS TABLE DC, AFO, TYPE C, MOTION, CWT, OR OTHER	WESTWARD TRACK 1 MOTION	EASTWARD TRACK 1 MOTION
STANDARD MINIMUM WARNING TIME IN SECONDS	20	20
WARNAT GATE TIME IN SECONDS	5	5
CLEARANCE TIME IN SECONDS	0	0
DOT TRAFFIC LIGHT SIMULTANEOUS PREEMPT TIME IN SECONDS ※	0	0
DESIGNED WARNING TIME FOR TRAINS AT TIME TABLE SPEED	25SEC.	25SEC.
DOT TRAFFIC LIGHT ADVANCE PREEMPT TIME IN SECONDS ※	0	0
CONTROL EQUIPMENT DECISION TIME IN SECONDS	2	2
DESIGNED DETECTION TIME FOR TRAINS AT TIME TABLE SPEED	27SEC.	27SEC.
TIME TABLE MAXIMUM TRAIN SPEED IN MILES PER HOUR	60	60
BUFFER SPEED IN MILES PER HOUR	5	5
TOTAL WARNING SYSTEM DESIGN SPEED IN MILES PER HOUR	65	65
APPROACH DISTANCE TO ISLAND EDGE IN FEET	2560'	2560'
HALF WIDTH OF ISLAND IN FEET	65'	65'
APPROXIMATE MILE POSTS FOR APPROACH CIRCUIT	163.66	164.62

※AUTHORIZING AGENCY, "NONE" IF NOT USED
※DATE OF REQUIREMENT, "NONE" IF NOT USED
※AMOUNT OF TIME (SEC.), "NONE" IF NOT USED

NOTE: 1. 20 WATT BULBS ON GATE ARMS.
ALL OTHERS TO BE 25 WATT BULBS.
2. GATE LENGTH (A) 28' (B) 28'
3. M = LOCATION OF HOUSE
MM = LOCATION OF MOTBOX DETECTOR HOUSE
4. = APPROXIMATE COMPASS NORTH.
5. THE TRANSMITTER LEADS FOR MOTION OR PROJECTOR EQUIPMENT SHOULD BE CONNECTED ON THE BUNGALOW OR SHORT LEAD SIDE OF THE CROSSING.
6. ISLAND TRACK LEADS SHOULD BE CONNECTED 50 FEET FROM NEAR EDGE OUT ON NARROW ROADS (20' OR LESS) ISLAND LENGTH SHALL BE 120 FEET.
7. WARNING SYSTEM APPROACH CIRCUIT DISTANCES ARE TO BE MEASURED FROM THE ISLAND TRACK CONNECTIONS.

SAFETRAN systems
PROJECT #. IL2000020
DES/CKED BY. DPL/RVS
DATE. 08-01-00

THIS PLAN DOES ☐ DOES NOT ☒
SUPERSEDE PLAN DATED. 02-20-87
CSX PROJECT #. IL2000020

- ○○○ = IN
- ✕✕✕ = OUT
- ⬭ = EXISTING

REVISIONS
09-02-03 GET IL2002017

CSX TRANSPORTATION
RAIL TRANSPORT GROUP ENGINEERING
COMMUNICATIONS AND SIGNALS

CP GALE TO WILLOWS
BURNSTOWN, IL
TRACK AND SIGNAL PLAN
COLLEGE AVE. 546 484B MP. 05-164.14

DESIGNED	DIGITIZED	CHECKED	DATE
GET/VPB	GET/CSH	GET/FAP	09-06-02

DRAWING	SHEET NO	NEXT SH	NEXT FILE	NEXT SH	FILE	SHEET
0406-1642	1-1	1-2	0516414	E01	0516414	501

CSX TRANSPORTATION

500 Water St
13th Floor
Jacksonville, FL 32202
EMAIL Hal_Gibson@csx.com
PHONE (904) 359-1048
FAX (904) 366-4042

RECEIVED
AUG 1 2006
Illinois Commerce Commission
RAIL SAFETY SECTION

Hal A. Gibson, Jr.
Principal Engineer, Public Projects

July 21, 2006

X-12481

Rodney Bergeron
Illinois Commerce Commission
527 East Capitol Avenue
Springfield, Illinois 62701

Subject: Brownstown, Fayette County, IL: Install automatic FLS&G and improved approaches at 4th Street, DOT 546482M, MP QS 163.90, Project Account IL0198

Dear Mr. Bergeron:

This refers to the attached letter from the Illinois Department of Transportation in connection with the installation of flashing light signals and gates the subject property.

Per Mr. Ingersoll's letter, I am attaching for your handling a Form 3 along with a copy of the plan and the agreement for the above referenced crossing. Please review and advise your approval so that we may proceed with this installation.

If you have any questions or would like to discuss this project, please contact me at 904-245-1048.

Thank you,

Hal Gibson

Completion of this form is necessary to accomplish the statutory purpose as outlined in the Illinois Public Utilities Act, chapter 111 2/3, Sec. 9. Failure to provide the requested information may prevent your request from being processed. This form has been approved by the Forms Management Center.

Form 3

RECEIVED
AUG 1 2006
Illinois Commerce Commission
RAIL SAFETY SECTION

STATE OF ILLINOIS
ILLINOIS COMMERCE COMMISSION

Petition for permission to make a major change in crossing protection, or to install new protection under 92 Illinois Administrative Code 1535.400 (d)

X-12481 Date: **July 20, 2006**

To the Illinois Commerce Commission:

546482M

The petitioner **CSX Transportation** shows

(1) That it is a railroad company operating a line of railroad in the State of Illinois.

(2) That petitioner proposes and hereby makes application for authority to make a major change in crossing protection, or to install new protection, under 92 Illinois Administrative Code 1535.400 (d) adopted by this Commission.

(3) That the location of the crossing, the nature of protection now established and proposed to be established, and other pertinent facts in connection therewith, are set forth in the statement attached to and forming part of this petition.

(4) That petitioner's reasons and purpose, with reference to its said proposal are

Installation of flashing light signals with gate units controlled by CWT.

(5) That the facts set forth in this petition and in the statement and plans or plats attached thereto, are, all of them, true and correct to the best of petitioner's knowledge and belief.

WHEREFORE, the petitioner prays that the Commission will, if deemed desirable by the Commission, set the aforesaid matter for hearing, and that the Commission enter an order or adopt a resolution consenting to and granting authority for the making of the said proposed changes in or additions to crossing protection.

CSX Transportation, Inc.

By

Hal Gibson
(Principal Engineer Public Projects
(904) 245-1030

Tammy Butler
(Attorney for Petitioner)

CSX Transportation, Inc.
500 Water Street, SC J-150
Jacksonville, FL 32202
(Attorney's Address)

Statement, attached to and part of an application for permission to make a major change in crossing protection or to install new protection, under 92 Ill. Adm. Code 1535.400(d).

1. Name of Railroad Company **CSX Transportation, Inc.**

2. Crossing Number **546482M**

3. Village or City **Brownstown**

4. Name of Street or Highway **4th Street**

5. Public Agency Maintaining Highway **Otego Township**

6. Protection now established: (Give full description. Indicate the hours of any manual protection.)

   Passive crossbuck signs.

7. Protection desired: (Give details)

   Automatic flashing light signals and gate units.

8. Number of main tracks **1** Other tracks **0**

9. Number of passenger train movements: 6 a.m. to 6 p.m. **0** 6 p.m. to 6 a.m. **0**

10. Number of freight train movements: 6 a.m. to 6 p.m. **6** 6 p.m. to 6 a.m. **6**

11. Approximate number of switch movements: 6 a.m. to 6 p.m. **1** 6 p.m. to 6 a.m. **1**

12. Maximum speed of trains at crossing on each track in each direction

Track 1 N/E Bound	**60**	mph	S/W Bound	**60**	mph
Track 2 N/E Bound		mph	S/W Bound		mph
Track 3 N/E Bound		mph	S/W Bound		mph

13. Passenger platforms served by tracks within the limits of track circuits, if any **N/A**

14. Where automatic signals or gates are proposed, approximately number of train or engine movements daily which would cause false indications or operation **N/A**

15. Nature and approximate amount of street or highway traffic over crossing
150 AADT

16. In addition to the information listed hereinbefore in Form 3, attach a track plan or plat of the proposed crossing. This plan should show:

(a) Width and surface of highway.
(b) Highway intersections (including private driveways to be so indicated) and location of established highway signs or signals within 100 feet of crossing.
(c) Location of tracks, switches and other railroad facilities such as block signals, etc. within limits of track circuits, present and/or proposed.
(d) Where automatic protection is proposed, show proposed location of signals (sidelights, cantilevers, etc., if any).
(e) Show the length of each operation track section within the control limits of the crossing protection and its function.

ADDITIONAL INFORMATION

VERIFICATION

I, **Hal Gibson)**, first being duly sworn upon oath depose and say that I am **Principal Engineer Public Projects)** of **CSX Transportation, Inc.**, an **Virginia** corporation; that I have read the above and foregoing petition by me subscribed and know the contents thereof; that said contents are true in substance and in fact, except as to those matters stated upon information and belief, and as to those, I believe same to be true.

Principal Engineer Public Projects

14

INDEX

CONTENTS

SH. NO.		REVISION NO. 1	2	3	4	5	6	7	8	9
I01	INDEX AND REVISIONS	✓								
S01	TRACK AND SIGNAL PLAN	✓								
P01	MINIMUM PROGRAM STEPS REPORT CWE-90	✓								
E01	POWER DISTRIBUTION	✓								
C01	DETECTION DEVICE CONSIST CWE-90	✓								
C02	DETECTION CIRCUITRY CWE-90	✓								
C03	DETECTION CIRCUITRY CWE-90	✓								
C04	CROSSING WARNING DEVICE GATE CIRCUITRY	✓								
C05	CROSSING WARNING DEVICE LIGHT CIRCUITRY	✓								
C06	CROSSING WARNING DEVICE CIRCUITRY	✓								
C07	SEAR II: CONFIGURATION & FUNCTIONS	✓								
C08	MICROCODE CIRCUITS	✓								
G01	INTERNAL SOFTWARE AND GATES LOGIC DIAGRAMS	✓								

RECEIVED
AUG 1 2006
Illinois Commerce Commission
RAIL SAFETY SECTION

☐ = PLANS SENT TO FIELD (DISTRIBUTED)
☒ = PLANS AS-IN-SERVICED (UP TO DATE)

NEW WORK
SAFETRAN systems
PROJECT #: IL2006029
DES/CHKD BY: DPL/SWS
DATE: 06-23-06

◯ = NOTE
✕✕✕ = OUT

REVISIONS

REV. NO.	PROJECT NO.	DESIGN DATE	IN SERVICE DATE	REVISION DATE
1	IL2006029	06-23-06		

TO BE COMPLETED ON A.I.S.

CSX TRANSPORTATION
RAIL TRANSPORT GROUP ENGINEERING
COMMUNICATIONS AND SIGNALS

CP GALE TO WILLOWS
FOURTH ST. (S4640201)
INDEX AND REVISIONS
BROWNSTOWN, IL M.P. QS-163.98

4000GCP.I01
REV. 03-31-06

DESIGN DATE	REV. NO.	DESIGNED	DIGITIZED	CHECKED	DATE
06-23-06	1	SAF/DPL	SAF/DPL	SAF/SWS	06-23-06

DRAWING	SHEET NO	FILE	SHEET
8486-1639	1 (A)	0516398	I01

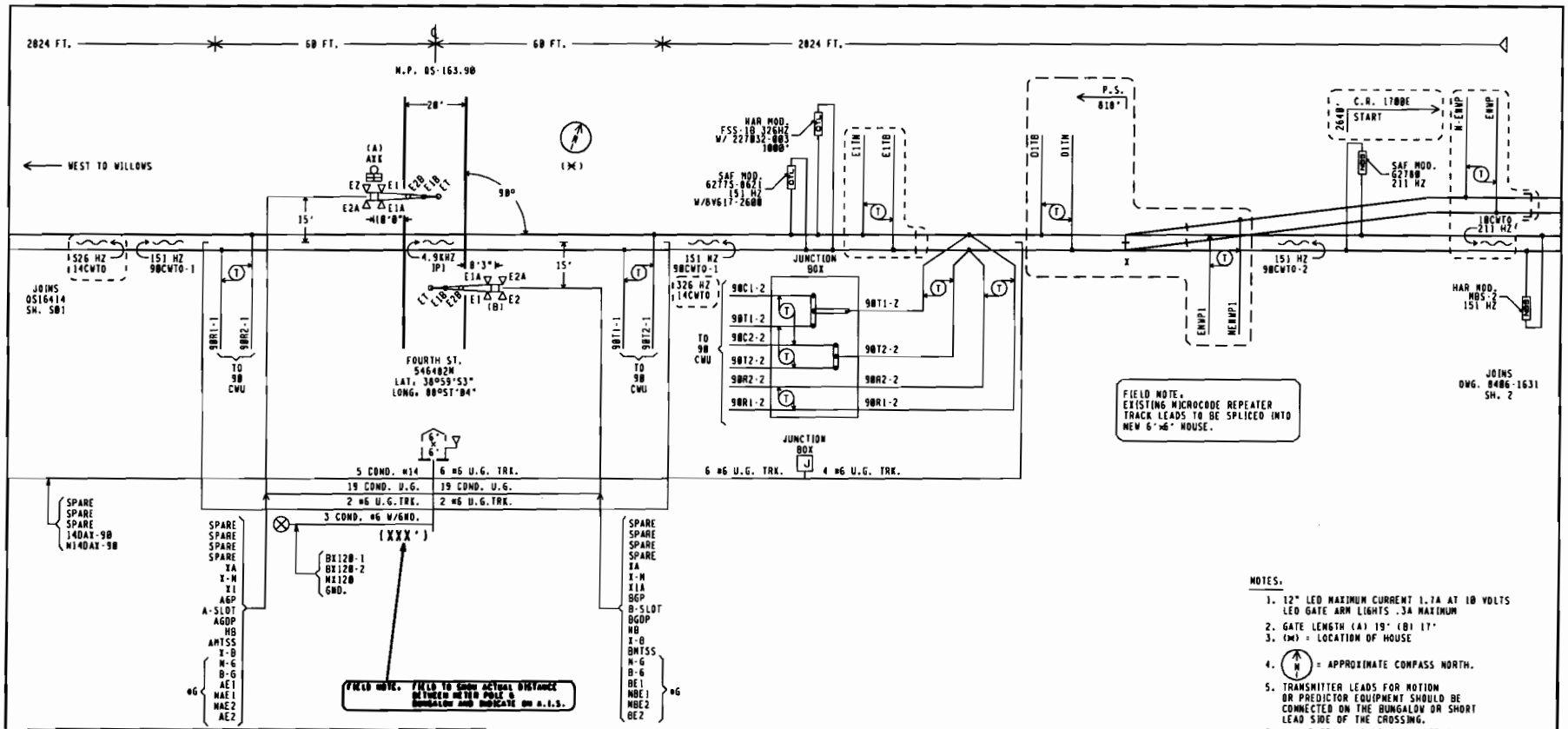

APPROACH LENGTHS TABLE	WESTWARD MAIN 1 CWT	EASTWARD MAIN 1 CWT
DC, AFO, TYPE C, MOTION, CWT, OR OTHER		
STANDARD MINIMUM WARNING TIME IN SECONDS	20	20
ROADWAY GATE TIME IN SECONDS	5	5
CLEARANCE TIME IN SECONDS	0	0
DOT TRAFFIC LIGHT SIMULTANEOUS PREEMPT TIME IN SECONDS *	0	0
DESIGNED WARNING TIME FOR TRAINS AT TIME TABLE SPEED	25 SEC.	25 SEC.
DOT TRAFFIC LIGHT ADVANCE PREEMPT TIME IN SECONDS *	0	0
CONTROL EQUIPMENT DECISION TIME IN SECONDS	5	5
DESIGNED DETECTION TIME FOR TRAINS AT TIME TABLE SPEED	30 SEC.	30 SEC.
TIME TABLE MAXIMUM TRAIN SPEED IN MILES PER HOUR	60	60
BUFFER SPEED IN MILES PER HOUR	5	5
TOTAL WARNING SYSTEM DESIGN SPEED IN MILES PER HOUR	65	65
APPROACH DISTANCE TO ISLAND EDGE IN FEET	2824	2824
HALF WIDTH OF ISLAND IN FEET	60	60
APPROXIMATE MILE POSTS FOR APPROACH CIRCUIT	164.45	163.35

*AUTHORIZING AGENCY. NONE
*DATE OF REQUIREMENT. NONE
*AMOUNT OF TIME (SEC.). NONE

NOTES.

1. 12" LED MAXIMUM CURRENT 1.7A AT 10 VOLTS
   LED GATE ARM LIGHTS .3A MAXIMUM
2. GATE LENGTH (A) 19' (B) 17'
3. (*) = LOCATION OF HOUSE
4. (N) = APPROXIMATE COMPASS NORTH.
5. TRANSMITTER LEADS FOR MOTION
   OR PREDICTOR EQUIPMENT SHOULD BE
   CONNECTED ON THE BUNGALOW OR SHORT
   LEAD SIDE OF THE CROSSING.
6. ISLAND TRACK LEADS SHOULD BE CONNECTED
   50 FEET FROM ROAD EDGE BUT ON NARROW
   ROADS (20' OR LESS) ISLAND LENGTH
   SHALL BE 120 FEET.
7. WARNING SYSTEM APPROACH CIRCUIT
   DISTANCES ARE TO BE MEASURED FROM THE
   ISLAND TRACK CONNECTIONS.

NEW WORK EXCEPT
(- - -) = EXISTING

SAFETRAN systems

PROJECT #. 1L2806029
DES/CHKD BY. DPL/SWS
DATE. 06-23-06

(- - -) = NOTE

✕✕✕ = OUT

CSX TRANSPORTATION
RAIL TRANSPORT GROUP ENGINEERING
COMMUNICATIONS AND SIGNALS

CP GALE TO WILLOWS

FOURTH ST. (546482M)

TRACK AND SIGNAL PLAN

BROWNSTOWN, IL M.P. QS-163.90

4000GCP.S01
REV. 03-31-06

DESIGNED	DIGITIZED	CHECKED	DATE
SAF/DPL	SAF/DPL	SAF/SWS	06-23-06

DESIGN DATE	REV. NO.	DRAWING	SHEET NO	FILE	SHEET
06-23-06	1	8486-1639	2 (A)	QS16390	S01

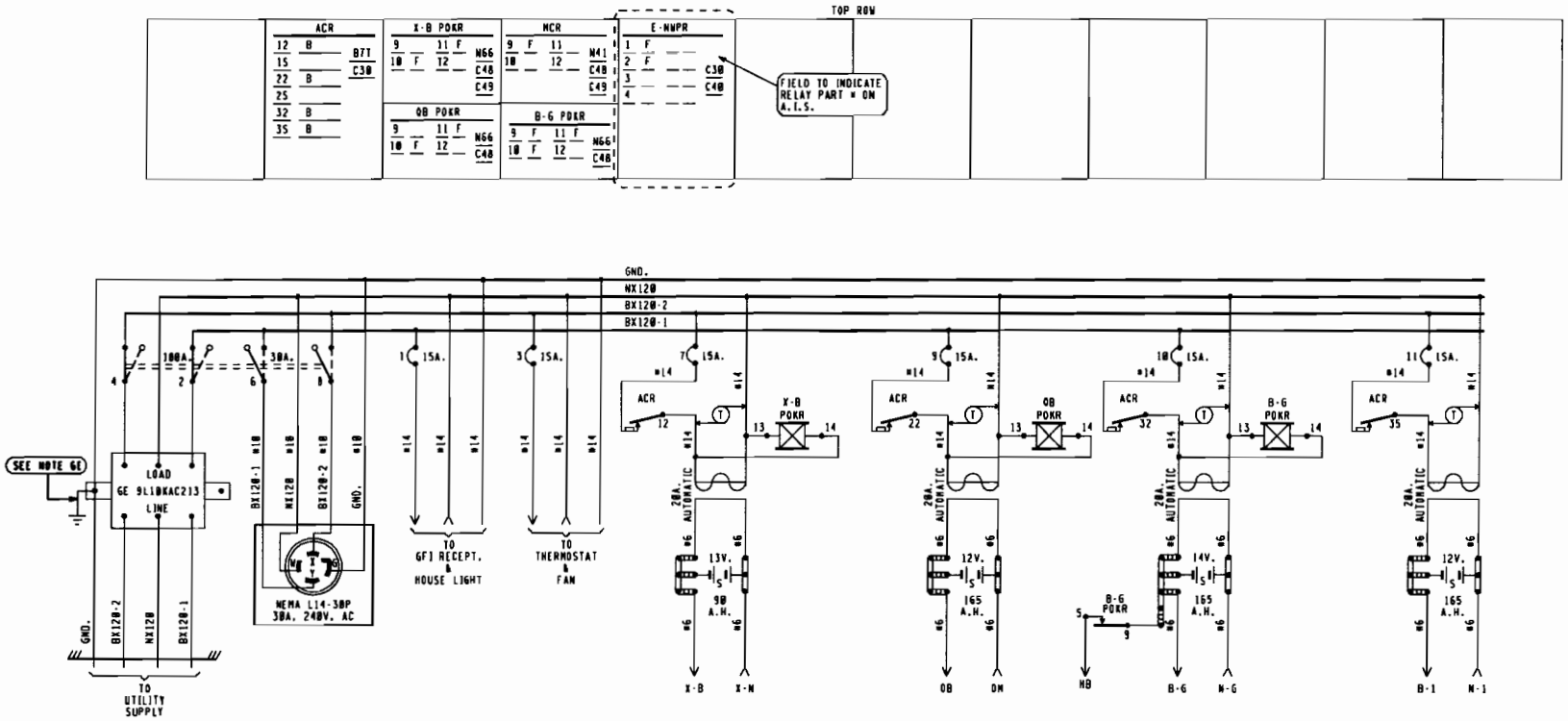

BX120-1	BX120-2
12.7 AMPS	14.0 AMPS

MAXIMUM LOAD
CALCULATED PER SS360

NOTES:

1 - REFERENCES ARE PER SCHS-13.
2 - ARRESTERS ARE PER SS382.
3 - SHELF RELAY PLACEMENT ON CONSIST CHART HAS NO SIGNIFICANCE.
4 - PLUG-IN RELAYS ARE VIEWED FROM THE FRONT OF RACK.
5 - BATTERY A.H. CAPACITY SHOWN IS THE MINIMUM REQUIREMENT.
6 - WIRING
  A - FEED TO ALL BUSSES, LIGHT CIRCUITS, MOTOR CIRCUITS TO BE #10 FLEX.
  B - 120-VOLT FEED FROM ENTRANCE TO POWER BUSS TO BE #10 FLEX.
  C - ALL TRACK WIRES TO BE #10 FLEX.
  D - ALL OTHERS TO BE #16 FLEX UNLESS NOTED.
  E - GROUND WIRE NOT NECESSARY WHEN GE ARRESTER IS MOUNTED ON GROUND PLANE OR METAL ENCLOSURE AFFIXED DIRECTLY TO BUNGALOW METALLIC STRUCTURAL MEMBER.
7 - CIRCUIT INTERRUPTERS 2 & 4 ARE MECHANICALLY INTERLOCKED WITH CIRCUIT INTERRUPTERS 6 & 8.

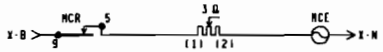

NEW WORK EXCEPT
( ) = EXISTING

SAFETRAN systems

PROJECT #. IL2006029
DES/CHKD BY. DPL/SWS
DATE. 06-23-06

( ) = NOTE

4000GCP.E01
REV. 03-31-06

6'X 6' RELAY HOUSE W/FARADAY SHIELD

CSX TRANSPORTATION
RAIL TRANSPORT GROUP ENGINEERING
COMMUNICATIONS AND SIGNALS

CP GALE TO WILLOWS
FOURTH ST. (5464020)
POWER DISTRIBUTION
BROWNSTOWN, IL M.P. 05-163.90

DESIGNED	DIGITIZED	CHECKED	DATE
SAF/DPL	SAF/DPL	SAF/SWS	06-23-06

DESIGN DATE	REV. NO.	DRAWING	SHEET NO	FILE	SHEET
06-23-06	1	8406-1639	4	0516398	E01

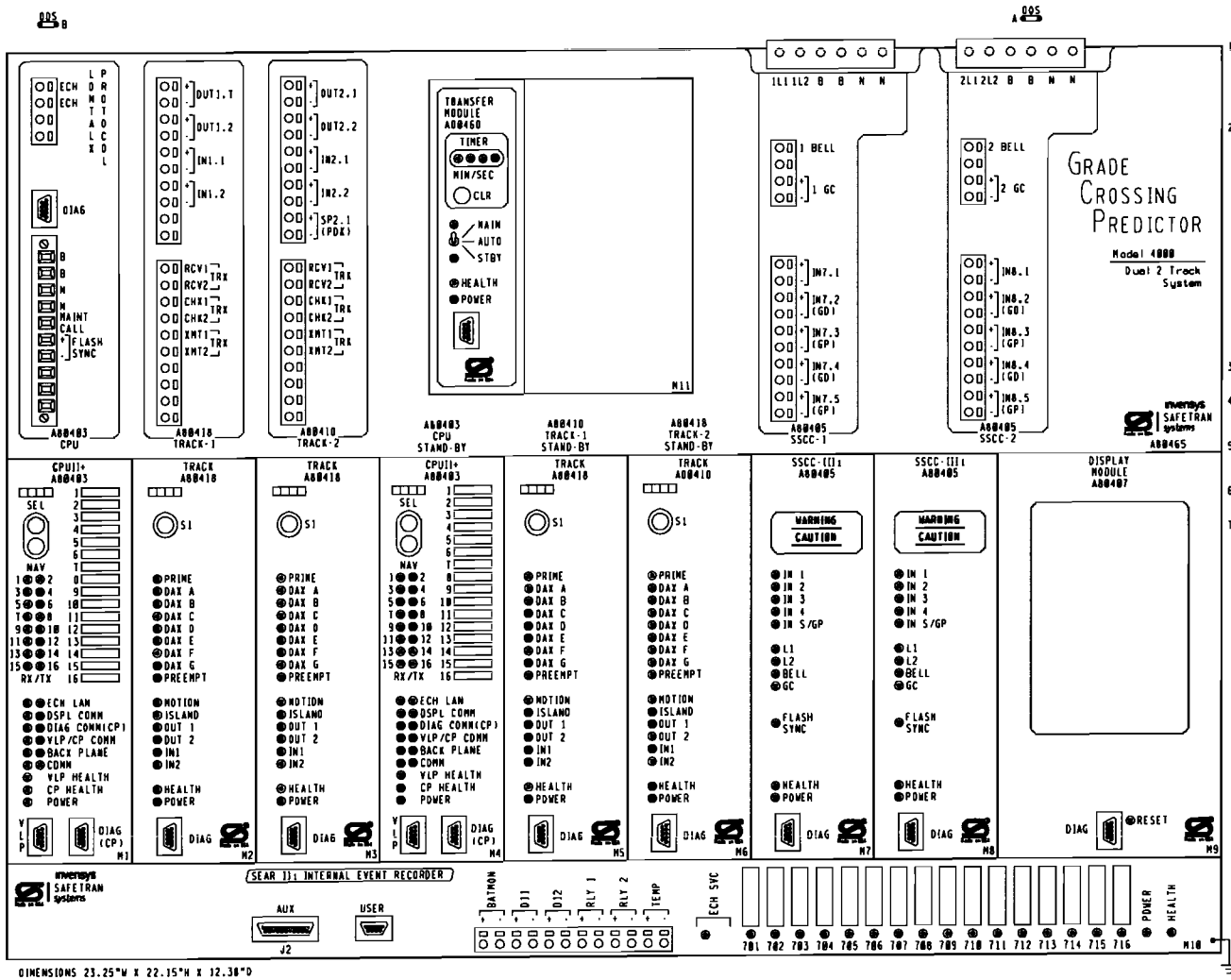

GCP 4000 APPLICATION NOTES.

1. THE GRADE CROSSING PREDICTOR (GCP) IS A MODULAR MICROPROCESSOR CONTROLLED SYSTEM THAT IS DEPLOYED TO CONTINUALLY MONITOR THE APPROACHES TO RAILROAD GRADE CROSSINGS AND TO CONTROL THE LAMPS, GATES AND BELLS ASSOCIATED WITH THOSE CROSSINGS. WHEN EQUIPPED WITH THE SEAR (I) MODULE THE GCP 4000 WILL RECORD EVENTS AND REPORT ALARMS WHEN CONNECTED TO AN OFFICE SYSTEM.

2. THE GCP 4000 GCP (A80465) IS A TWO TRACK REDUNDANT UNIT CAPABLE OF DRIVING 4 INDEPENDENT FLASHER AND GATE SIGNALS AND RECORDING EVENTS AND REPORTING ALARMS. THE STANDARD A80465 INCLUDES THE FOLLOWING MODULES.

SLOT	MODULE	FUNCTION	PART NO.
M1	CPU-II+	MAIN	A80403
M2	TRACK-1	MAIN	A80418
M3	TRACK-2	MAIN	A80418
M4	CPU-II+	STANDBY	A80403
M5	TRACK-1	STANDBY	A80418
M6	TRACK-2	STANDBY	A80418
M7	SSCC-III	SIG 1-2	A80405
M8	SSCC-III	SIG 3-4	A80405
M9	DISPLAY MODULE		A80407
M11	TRANSFER UNIT		A80460
M10 (LOWER BAY)	SEAR (I)	RECORDER	A80410
OPTIONAL MODULES.			
R10 MODULE			A80413

3. EACH TRACK MODULE HAS TWO PROGRAMMABLE INPUTS AND TWO PROGRAMMABLE OUTPUTS.

4. THE SEAR (I) INTERNAL EVENT RECORDER HAS INPUTS FOR ONE BATTERY MONITOR, TWO NON-VITAL INPUTS AND TWO PROGRAMMABLE RELAY DRIVES (HEEL/FRONT).

5. LOCATED ON THE FRONT OF EACH MODULE THERE ARE LED LIGHTS TO INDICATE THE ACTIVITY OF CERTAIN FUNCTIONS OCCURRING INSIDE THE GCP.

6. BETWEEN SLOT 1 & 2 THERE IS A CHASSIS INDENTIFICATION CHIP (CIC) SOCKET AND AN ECD CONNECTOR (DB-25 FEMALE).

7. UPON THE FAILURE OF A MODULE IN SLOTS M1-M3 THE AUTOMATIC TRANSFER UNIT SWITCHES TO THE STANDBY MODULES IN SLOTS M4-M6.

NEW WORK

SAFETRAN systems

PROJECT #. IL2006029

DES/CHKD BY. DPL/SWS

DATE. 06-23-06

= NOTE

CSX TRANSPORTATION

RAIL TRANSPORT GROUP ENGINEERING
COMMUNICATIONS AND SIGNALS

CP GALE TO WILLOWS

FOURTH ST. (546082)

DETECTION DEVICE CONSIST CWE-90

BROWNSTOWN, IL M.P. QS-163.90

4000GCP.C01
REV. 01-31-06

DESIGNED	DIGITIZED	CHECKED	DATE
SAF/DPL	SAF/DPL	SAF/SWS	06-23-06

DESIGN DATE	REV. NO.	DRAWING	SHEET NO	FILE	SHEET
06-23-06	1	0406-1639	5	QS16398	C01

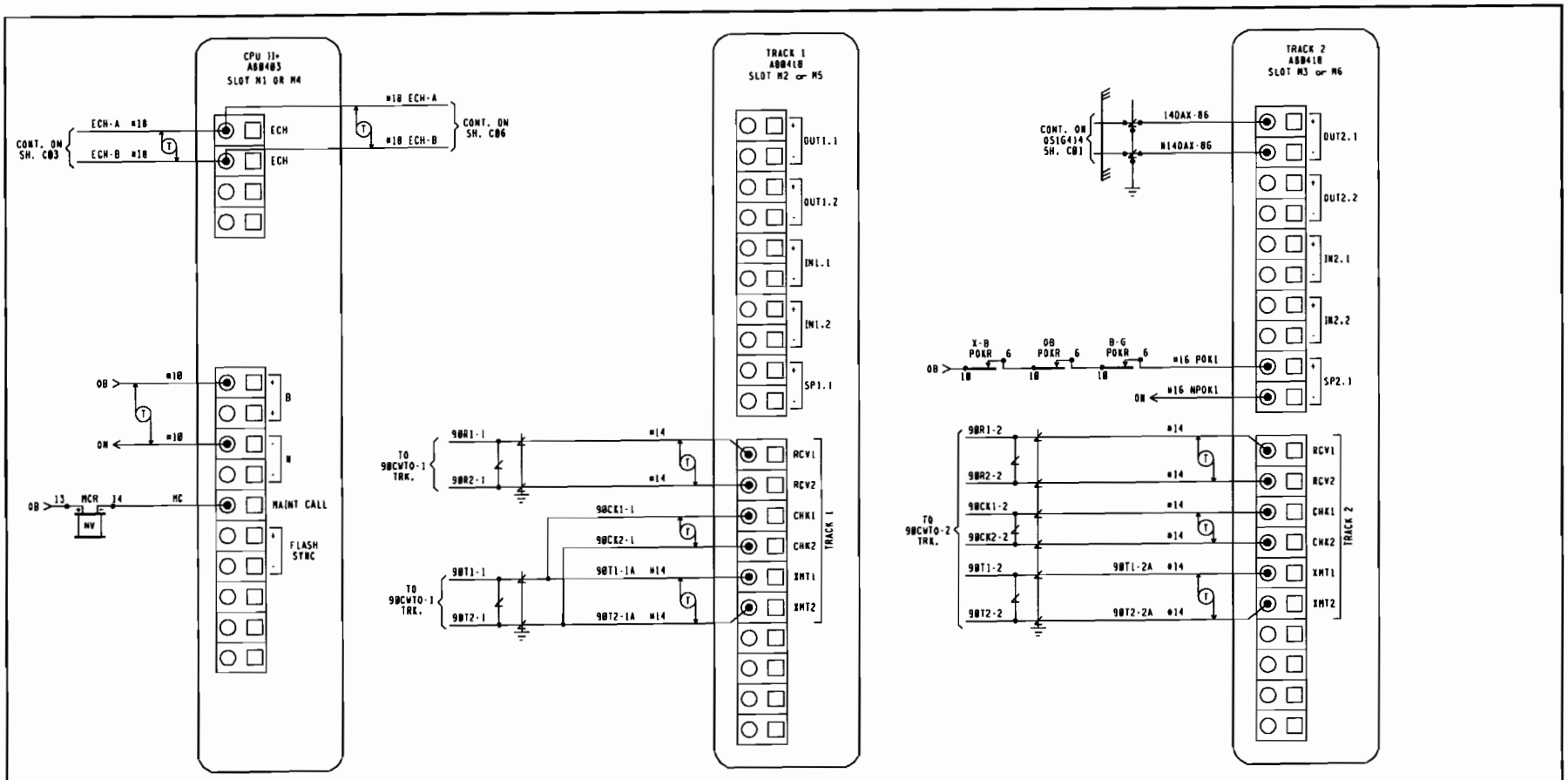

NOTE:

ECHELON CONNECTIONS NOT TO EXCEED 53' IN LENGTH AND TOTAL LENGTH COMBINED NOT TO EXCEED 430' WITH A MAXIMUM OF 8 NODES. RECOMMEND USE BELDEN WIRE CABLE #8461 OR EQUIVALENT.

NEW WORK

SAFETRAN systems

PROJECT #: IL2006829
DES/CHKD BY: DPL/SWS
DATE: 06-23-86

4000GCP.C02
REV. 11-18-85

GSK TRANSPORTATION

RAIL TRANSPORT GROUP ENGINEERING
COMMUNICATIONS AND SIGNALS

CP GALE TO WILLOWS

FOURTH ST. (546402M)

DETECTION CIRCUITRY CWE-90

BROWNSTOWN, IL M.P. DS-163.90

DESIGN DATE	REV. NO.	DRAWING	SHEET NO	FILE	SHEET
06-23-86	1	8406-1639	6	OS16390	C02

DESIGNED	DIGITIZED	CHECKED	DATE
SAF/DPL	SAF/DPL	SAF/SWS	06-23-86

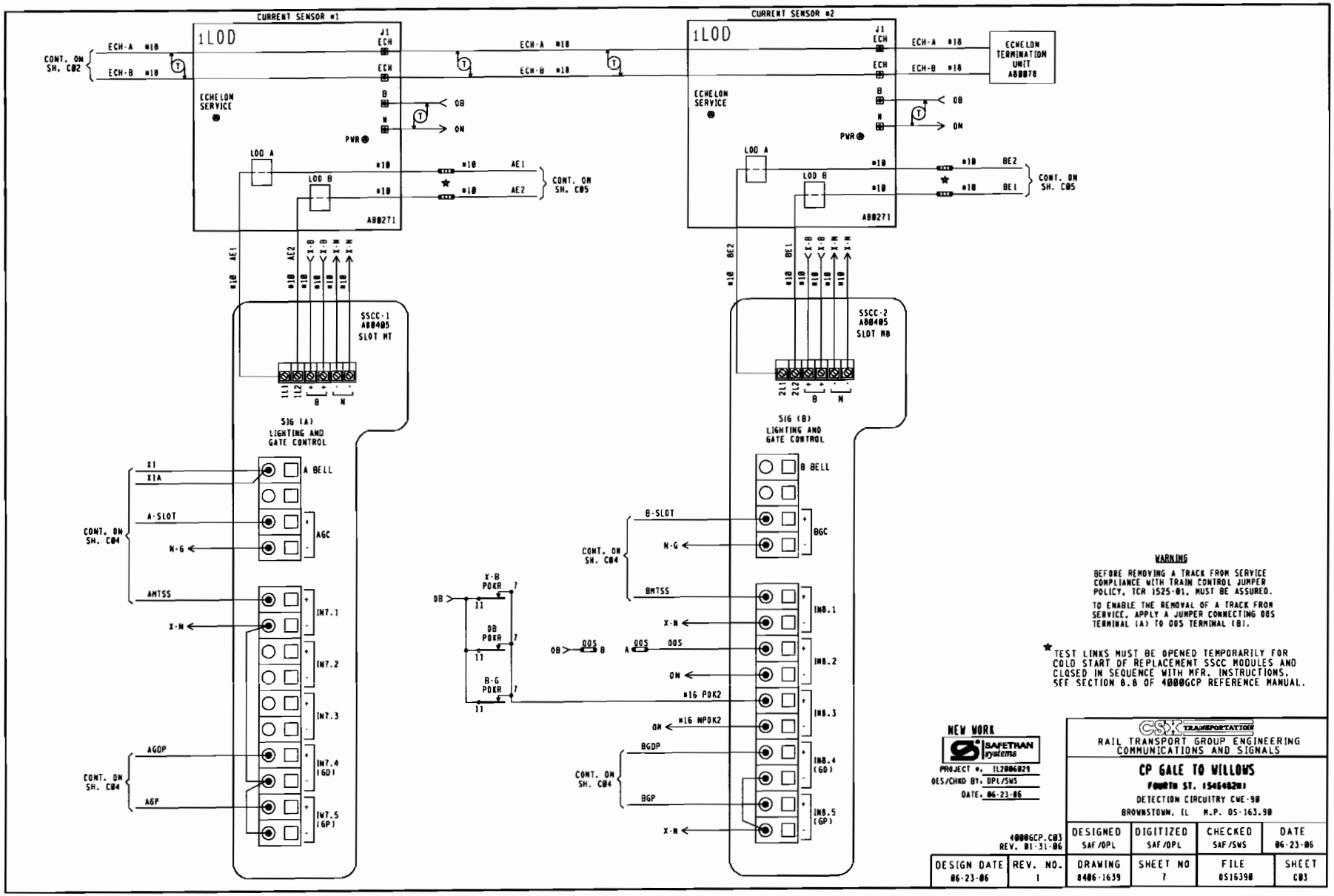

WARNING

BEFORE REMOVING A TRACK FROM SERVICE COMPLIANCE WITH TRAIN CONTROL JUMPER POLICY, TCR 1525-01, MUST BE ASSURED.

TO ENABLE THE REMOVAL OF A TRACK FROM SERVICE, APPLY A JUMPER CONNECTING OOS TERMINAL (A) TO OOS TERMINAL (B).

★ TEST LINKS MUST BE OPENED TEMPORARILY FOR COLD START OF REPLACEMENT SSCC MODULES AND CLOSED IN SEQUENCE WITH MFR. INSTRUCTIONS. SEE SECTION 8.8 OF 4000GCP REFERENCE MANUAL.

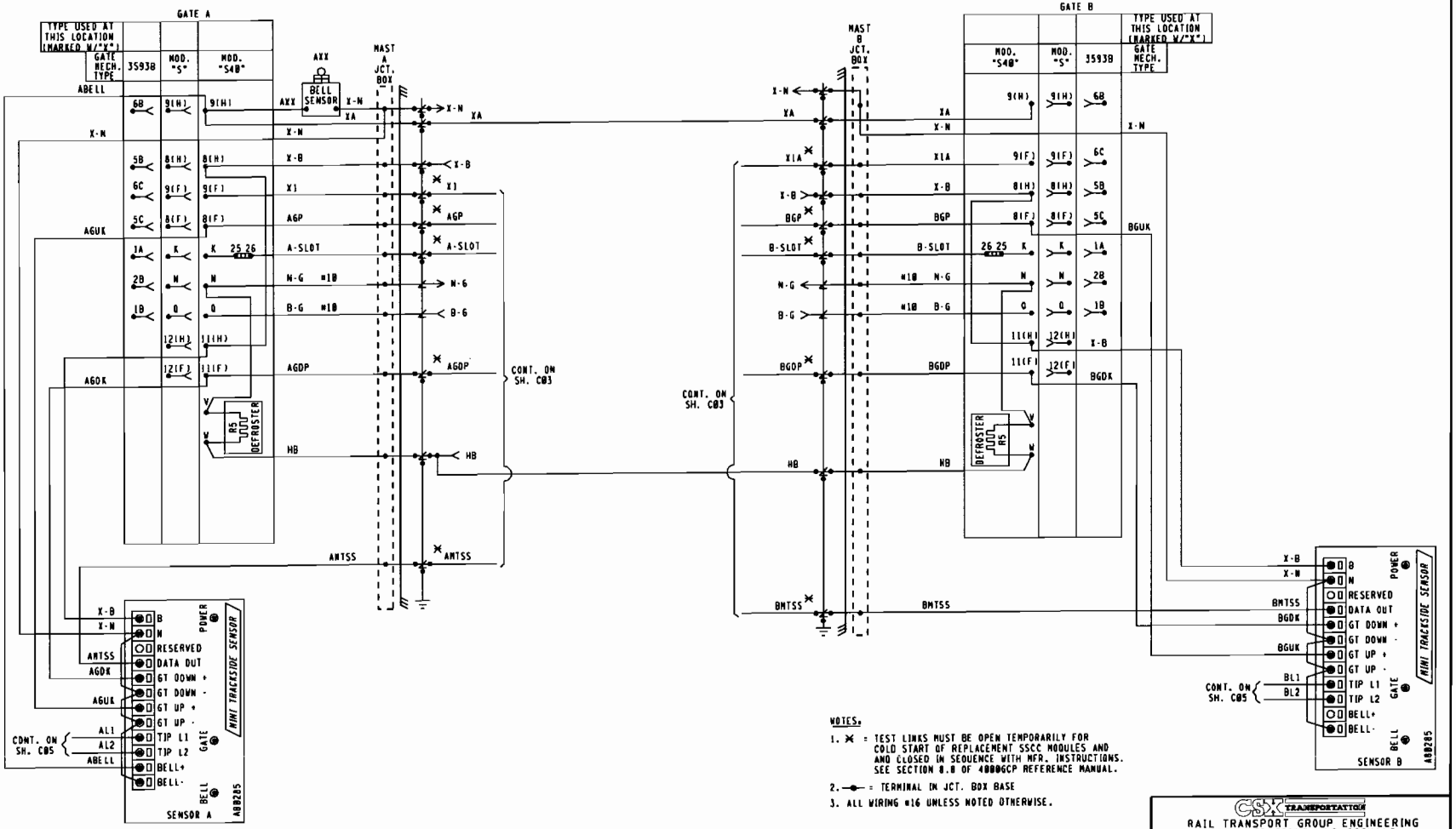

NOTES:

1. ✕ = TEST LINKS MUST BE OPEN TEMPORARILY FOR COLD START OF REPLACEMENT SSCC MODULES AND AND CLOSED IN SEQUENCE WITH MFR. INSTRUCTIONS. SEE SECTION 8.8 OF 4000GCP REFERENCE MANUAL.
2. —●— = TERMINAL IN JCT. BOX BASE
3. ALL WIRING #16 UNLESS NOTED OTHERWISE.

NEW WORK

SAFETRAN systems

PROJECT #: IL2006029
DES/CHKD BY: DPL/SWS
DATE: 06-23-06

4000GCP.C04
REV. 01-31-06

CSX TRANSPORTATION

RAIL TRANSPORT GROUP ENGINEERING
COMMUNICATIONS AND SIGNALS

CP GALE TO WILLOWS

FOURTH ST. (540402M)

CROSSING WARNING DEVICE GATE CIRCUITRY

BROWNSTOWN, IL M.P. OS-163.90

DESIGNED	DIGITIZED	CHECKED	DATE
SAF/DPL	SAF/DPL	SAF/SWS	06-23-06

DESIGN DATE	REV. NO.	DRAWING	SHEET NO	FILE	SHEET
06-23-06	1	8406-1639	8	0516398	C04

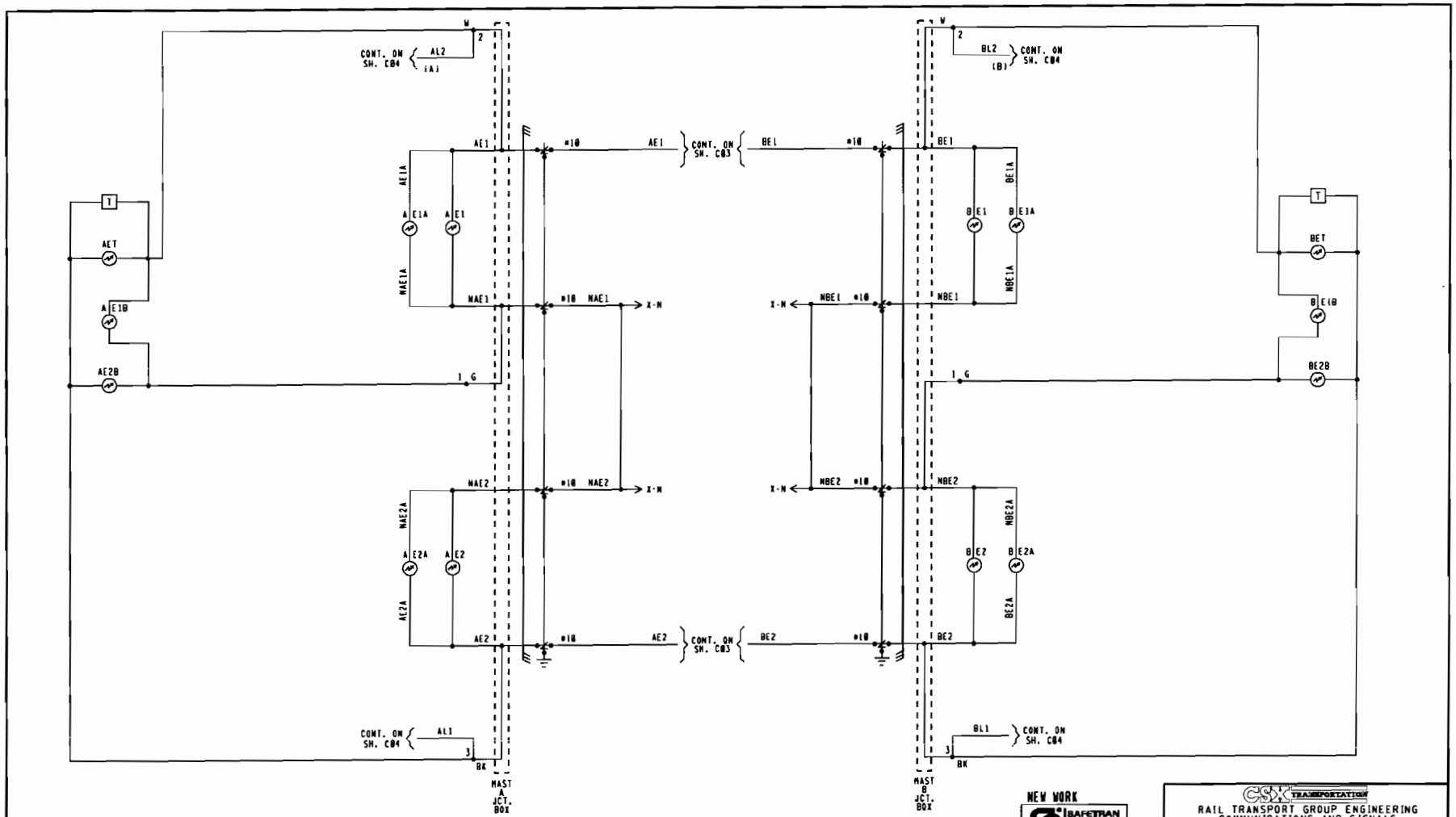

NOTES:

1. [●] = TERMINAL IN JCT. BOX
2. WHEN 7 OR MORE LIGHTS ARE LIT ON A SINGLE STRUCTURE REFER TO SS382 FOR REQUIRED ARRESTER RATING.
3. [T] = TIP SENSOR

NEW WORK

SAFETRAN systems

PROJECT #: IL2006029
DES/CHKD BY: DPL/SWS
DATE: 06-23-06

CSX TRANSPORTATION

RAIL TRANSPORT GROUP ENGINEERING
COMMUNICATIONS AND SIGNALS

CP GALE TO WILLOWS

FOURTH ST. (5464020)

CROSSING WARNING DEVICE LIGHT CIRCUITRY

BROWNSTOWN, IL M.P. QS-163.90

4006CP.C05
REV. 01-31-06

DESIGN DATE	REV. NO.	DRAWING	SHEET NO	FILE	SHEET
06-23-06	1	0406-1639	9	QS16390	C05

DESIGNED	DIGITIZED	CHECKED	DATE
SAF/DPL	SAF/DPL	SAF/SWS	06-23-06

WATSIDE ACCESS GATEWAY CONFIGURATION	
SITE ATCS ADDRESS	7.125.412.007.01.01 7.125.LLL.GGG.SS.DD
SERIAL INTERFACE	9600,NONE,8,1/NOFLOW
SERIAL FORMAT	RAW
WAG TEST MODE	DISABLED
ECHELON ADDRESS	
UDP PORTS	5000, 5001, 5002, 5003
ROUTE TABLE EXPIRY	5400 SEC
BROADCAST MEDIUM	IP ETHERNET
TCP PORTS	6001
DHCP SERVER	DISABLED
IP ADDRESS	
TYPE 7 ROUTE LENGTH	12--7RRLLLGGGSS
IP NETWORK MASK	

NOTE TO INSPECTOR,
AT INSTALLATION OF WAG,
OR UPDATE OF THE CONFIGURATION,
OR UPDATE OF THE EXECUTIVE PROGRAM,
MAKE-UP CONFIGURATION TABLE FOR
AS IN SERVICE PLANS

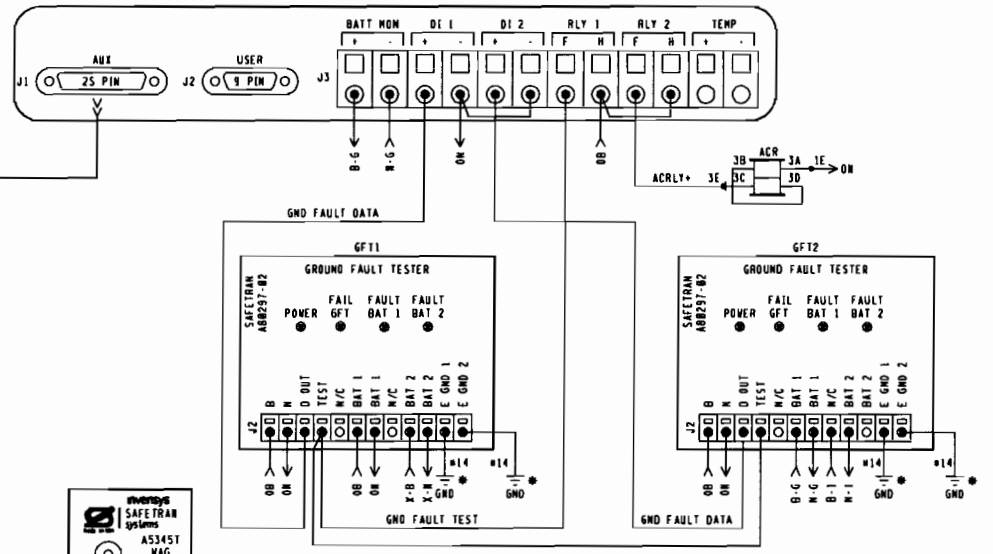

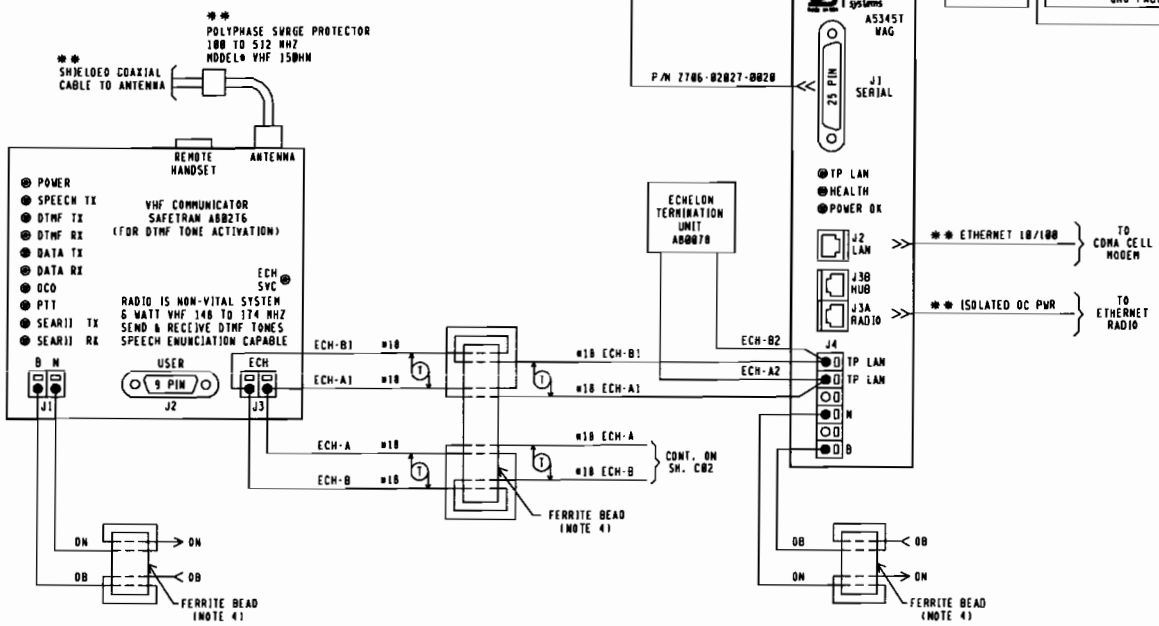

GCP PROGRAMMING FOR VHF RADIO

REMOTE DTMF CROSSING ACTIVATION (ACTIVATES ENTIRE CROSSING)	
TO ACTIVATE PRESS:	482#
TO DE-ACTIVATE PRESS:	482*
(ACTIVATION WILL TIME OUT AFTER 60 SEC.)	
REMOTE DTMF LIGHTING ACTIVATION (ACTIVATES FLASHING LIGHTS ONLY)	
TO ACTIVATE PRESS:	481#
TO DE-ACTIVATE PRESS:	481*
(ACTIVATION WILL TIME OUT AFTER 60 SEC.)	

COMM NOTES.
1. WAG J3A PINOUTS.
   4 & 5 = +12VDC RADIO OUT
   7 & 8 = GND RADIO RETURN
2. WAG AND SEAR II: ECHELON COMM THROUGH GCP4000 LONTALK PROTOCOL CONNECTION

NOTES.
1. ALL WIRING #16 UNLESS NOTED OTHERWISE.
2. * = EARTH GROUND REF. TERMINALS REQUIRED FOR DETECTION. DO NOT JUMPER TERMINALS. MUST BE CONNECTED TO DIFFERENT POINTS OF BUNGALOW.
3. ** = TO BE PROVIDED BY COMMUNICATIONS
4. LOOP WIRE THROUGH FERRITE BEAD TWICE.

NEW WORK
SAFETRAN systems
PROJECT #: IL2006029
DES/CHKD BY: DPL/SWS
DATE: 06-23-06

CSX TRANSPORTATION
RAIL TRANSPORT GROUP ENGINEERING
COMMUNICATIONS AND SIGNALS

CP GALE TO WILLOWS
FOURTH ST. (5464020)
CROSSING WARNING DEVICE CIRCUITRY
BROWNSTOWN, IL M.P. OS-163.90

4000GCP.C06
REV. 01-31-06

DESIGNED	DIGITIZED	CHECKED	DATE
SAF/DPL	SAF/DPL	SAF/SWS	06-23-06

DESIGN DATE	REV. NO.	DRAWING	SHEET NO	FILE	SHEET
06-23-06	1	8406-1639	10	051639B	C06

	DEFAULTS AND/OR STYLE	FIELD RECORD
SEAR II: EXECUTIVE PROGRAM	VERSION: 9V125A01	VERSION: 1
APPLICATION PROGRAM (IF LOADED)	VERSION: 9V464A01	VERSION: C

NOTE TO INSPECTOR. AT IN SERVICE OF SEAR II: OR UPDATE OF ITS INTERNAL EXECUTIVE PROGRAM OR ITS CSXT APPLICATION PROGRAM, THE VERSION NUMBER OF EACH PROGRAM MUST BE INSERTED IN THE BLANK FIELDS.

SITE SET UP PROCEDURE	
FUNCTION	LED DISPLAY
DATE/TIME	XX-XX-XXXX XXxXXxXX
AUTOMACTIC DST ADJUSTMENT	YES
TIME ZONE	EASTERN
SITE NAME	FOURTH ST
MILEPOST	05-163.98
DOT NUMBER	546482M
TESTER TYPE	CROSSING
DATE FORMAT	MM-DD-YYYY
TEMP FORMAT	FAHRENHEIT
INDICATE HOLD (SEC)	0
SITE TYPE	COLLECTOR
SITE ATCS ADDRESS	T.125.412.00T.99.01 (T.RRR.LLL.GGG.99.01)
POLL ID	1
OFFICE ADDRESS	2.125.00.0000 (2.RRR.NN.DDDD)
FIELD COMM. DEVICE	VHF COMM. (ECHELON)
MODE	GEN/ATCS
WAMS XID	ENABLED
OFFICE COMM. DEVICE	WAG (ECHELON)
USER PORT BAUD	9600
USER PORT DATA BITS	8
USER PORT PARITY	NONE
USER PORT STOP BITS	1
USER PORT FLOW CONTROL	NONE
AUX PORT BAUD	9600
AUX PORT DATA BITS	8
AUX PORT PARITY	NONE
AUX PORT STOP BITS	1
AUX PORT FLOW CONTROL	NONE
COMM PORT BAUD	9600
COMM PORT DATA BITS	8
COMM PORT PARITY	NONE
COMM PORT STOP BITS	1
COMM PORT FLOW CONTROL	NONE

INSPECTOR NOTE.
USE VHF RADIO CHANNEL TABLE TO SELECT ROAD AND MAINT. CHANNEL PER DIVISIONS FREQUENCY ALLOCATIONS. INDICATE ON A.I.S.

	CONTROL SYSTEM CONFIGURATION MENU QUESTIONS	
	OPTION	SELECTION
NOTE 1 -	RESET NAMES AND MODULES*	YES ☐ NO ☐
	RAILROAD NUMBER	125
	ENTRANCE GATES*	0 ☐ 1 ☐ 2 ■ 3 ☐ 4 ☐ 5 ☐ 6 ☐ 7 ☐ 8 ☐
NOTE 2 -	EXIT GATES*	0 ■ 1 ☐ 2 ☐ 3 ☐ 4 ☐
	GATE POSITION FAIL*	20 SECS.
	BATTERY BANKS*	1 ☐ 2 ■ 3 ☐
	BATT MON USED*	NO ☐ YES ■
	INTERNAL CROSSING CONTROLLERS*	0 ☐ 1 ☐ 2 ■
	EXTERNAL CROSSING CONTROLLERS*	0 ■ 1 ☐ 2 ☐
NOTE 3	VHF COMMUNICATOR*	YES ■ NO ☐
	ACTIVATION CODE	482
	ACTIVATION TIMEOUT	(60 SEC)
	iLOO MODULES*	0 ☐ 1 ☐ 2 ■ 3 ☐ 4 ☐
NOTE 4 -	MIXED LED/INCANDESCENT BULBS*	NO ☐ YES ■
	AUTO INSPECTIONS*	YES ■ NO ☐
	BELL SENSOR*	0 ☐ 1 ■ 2 ☐ 3 ☐ 4 ☐
NOTE 5	BELL SENSOR TSS 1*	NO ☐ YES ■
	BELL SENSOR TSS 2*	NO ■ YES ☐
	BELL SENSOR TSS 3*	NO ■ YES ☐
	BELL SENSOR TSS 4*	NO ■ YES ☐
	BELL SENSOR TSS 5*	NO ■ YES ☐
	BELL SENSOR TSS 6*	NO ■ YES ☐
	BELL SENSOR TSS 7*	NO ■ YES ☐
	BELL SENSOR TSS 8*	NO ■ YES ☐
	BELL ON*	GATES LOWERING ■ GATES MOVING ☐ ALWAYS ☐
	GFT'S	YES ■ NO ☐
	BATTERIES ON GFTI	1 ☐ 2 ■
NOTE 6 -	GATE TIP SENSORS*	YES ■ NO ☐
	RTU	NO ■ YES ☐
NOTE 7	ROAD CHANNEL	1 ☐ 2 ☐ 3 ☐ 4 ☐ 5 ☐ 6 ☐ 7 ☐ 8 ☐
	MAINT. CHANNEL	1 ☐ 2 ☐ 3 ☐ 4 ☐ 5 ☐ 6 ☐ 7 ☐ 8 ☐
	FULL APPROACH MOVE ALARMS*	ACTIVATED ■ DO NOT ACTIVATE ☐

NOTE 8	EDIT DIGITAL INPUTS	■ NO ☐ YES
	EDIT BATTERIES	■ NO ☐ YES
	EDIT RELAYS	■ NO ☐ YES
	EDIT INDICATOR LEDS	■ NO ☐ YES
	EDIT TEST LED'S	■ NO ☐ YES
	EDIT iLOO SENSOR	■ NO ☐ YES
	EDIT VHF SETTINGS	■ NO ☐ YES

NOTES.
1. SELECT YES ON INITIAL SET-UP.
2. OPTION AVAILABLE IF GATES = YES
3. OPTION AVAILABLE IF VHF COMMUNICATOR = YES LAST 3 DIGITS OF DOT NUMBER.
4. OPTION AVAILABLE IF iLOOS.
5. OPTION AVAILABLE IF BELL SENSORS.
6. OPTION AVAILABLE IF GATES.
7. OPTION AVAILABLE IF VHF RADIO.
8. ONLY YES IN SPECIAL CIRCUMSTANCES.

INSPECTOR NOTE.
CURRENT VALUES MAY VARY DEPENDANT ON FIELD CONDITIONS. MAKE UP PER ACTUAL READINGS FOR IN-SERVICE REVISION.

LIT BULB COUNT ON EACH CIRCUIT	NO.	TYPE OF BULB	CURRENT READING IN AMP. AT APPROX. 10.0 V ARRAY VOLTAGE
CURRENT SENSOR (1) AE1, LAMP SET UP	4	☐BULBS ■LED	4.0
CURRENT SENSOR (1) AE2, LAMP SET UP	4	☐BULBS ■LED	4.0
CURRENT SENSOR (2) BE1, LAMP SET UP	4	☐BULBS ■LED	4.0
CURRENT SENSOR (2) BE2, LAMP SET UP	4	☐BULBS ■LED	4.0

MEASURE BATTERY VOLTAGE AT INPUT		
BATTERY VOLTAGE	0B	_____ VOLTS
BATTERY VOLTAGE	X-B	_____ VOLTS
BATTERY VOLTAGE	B-G	_____ VOLTS

VHF RADIO CHANNELS			
1	161.130	5	161.550
2	160.710	6	160.785
3	160.560	7	160.785
4	160.860	8	160.705

NEW YORK
SAFETRAN systems
PROJECT #. IL2006029
DES/CHKD BY. DPL/SWS
DATE. 06-23-06

( ) = NOTE

(0006CP.C07
REV. 02-03-06

CSX TRANSPORTATION
RAIL TRANSPORT GROUP ENGINEERING
COMMUNICATIONS AND SIGNALS

CP GALE TO WILLOWS
FOURTH ST. (546482M)
SEAR II: CONFIGURATION & FUNCTIONS
BROWNSTOWN, IL M.P. 05-163.98

DESIGNED	DIGITIZED	CHECKED	DATE
SAF/DPL	SAF/DPL	SAF/SWS	06-23-06

DESIGN DATE	REV. NO.	DRAWING	SHEET NO	FILE	SHEET
06-23-06	1	8406-1639	11	051639B	C07

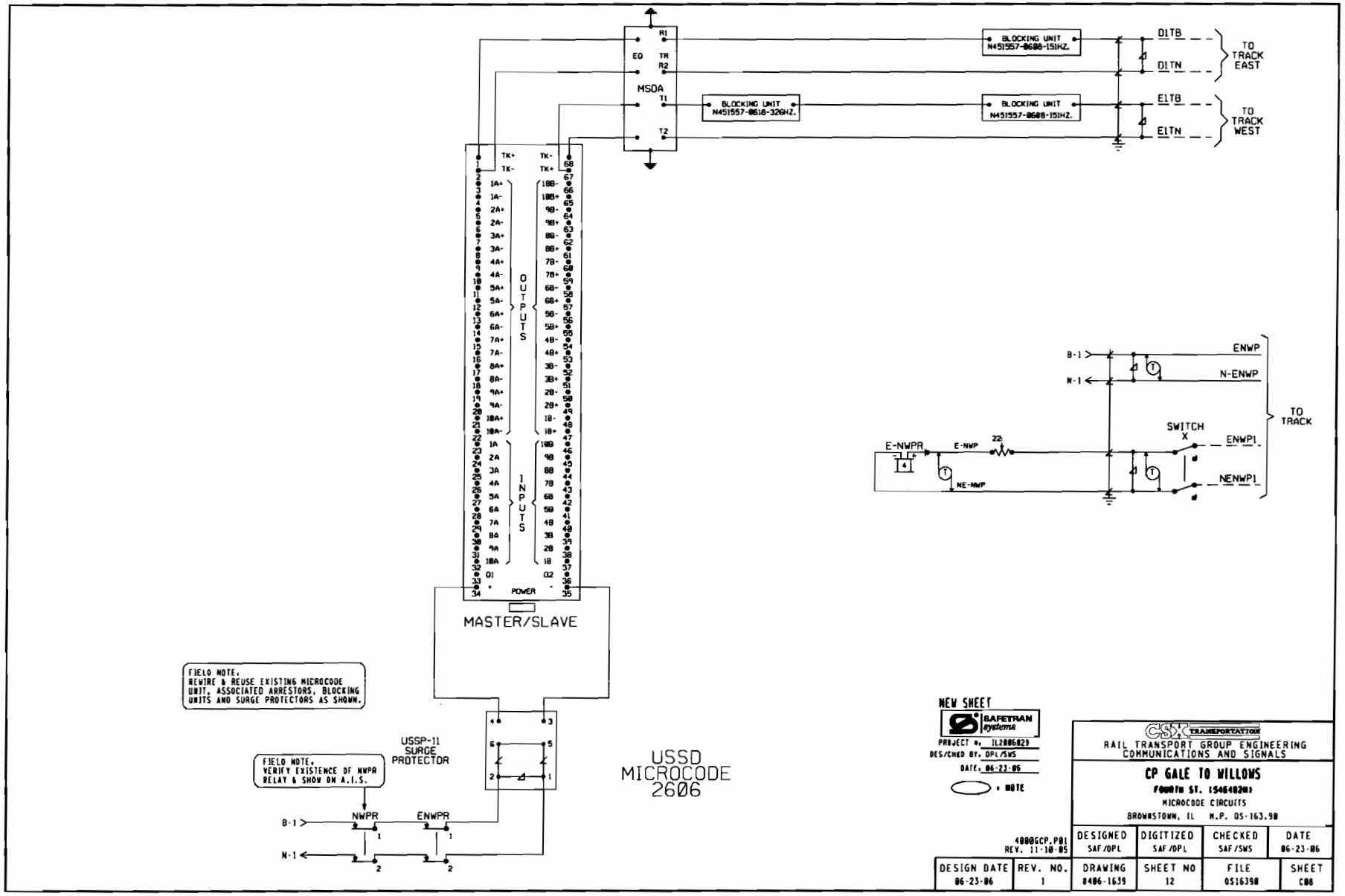
MSDA
R1
EQ
TR
R2
T1
T2
BLOCKING UNIT N451557-0608-151HZ.
BLOCKING UNIT N451557-0618-326HZ.
BLOCKING UNIT N451557-0608-151HZ.
D1TB
D1TN
E1TB
E1TN
TO TRACK EAST
TO TRACK WEST
TK+
TK-
OUTPUTS
INPUTS
POWER
MASTER/SLAVE
B-1
N-1
ENWP
N-ENWP
SWITCH X
ENWP1
NENWP1
TO TRACK
E-NWPR
E-NWP
NE-NWP
22
FIELD NOTE, REWIRE & REUSE EXISTING MICROCODE UNIT, ASSOCIATED ARRESTORS, BLOCKING UNITS AND SURGE PROTECTORS AS SHOWN.
FIELD NOTE, VERIFY EXISTENCE OF NWPR RELAY & SHOW ON A.I.S.
USSP-11 SURGE PROTECTOR
NWPR
ENWPR
USSD MICROCODE 2606
NEW SHEET
SAFETRAN systems
PROJECT #. IL2006029
DES/CHED BY. DPL/SWS
DATE. 06-23-06
= NOTE
CSX TRANSPORTATION
RAIL TRANSPORT GROUP ENGINEERING
COMMUNICATIONS AND SIGNALS
CP GALE TO WILLOWS
FOURTH ST. (546402M)
MICROCODE CIRCUITS
BROWNSTOWN, IL M.P. DS-163.98
4000GCP.P01
REV. 11-10-05
DESIGNED SAF/DPL
DIGITIZED SAF/DPL
CHECKED SAF/SWS
DATE 06-23-06
DESIGN DATE 06-23-06
REV. NO. 1
DRAWING 8406-1639
SHEET NO 12
FILE DS16398
SHEET C08

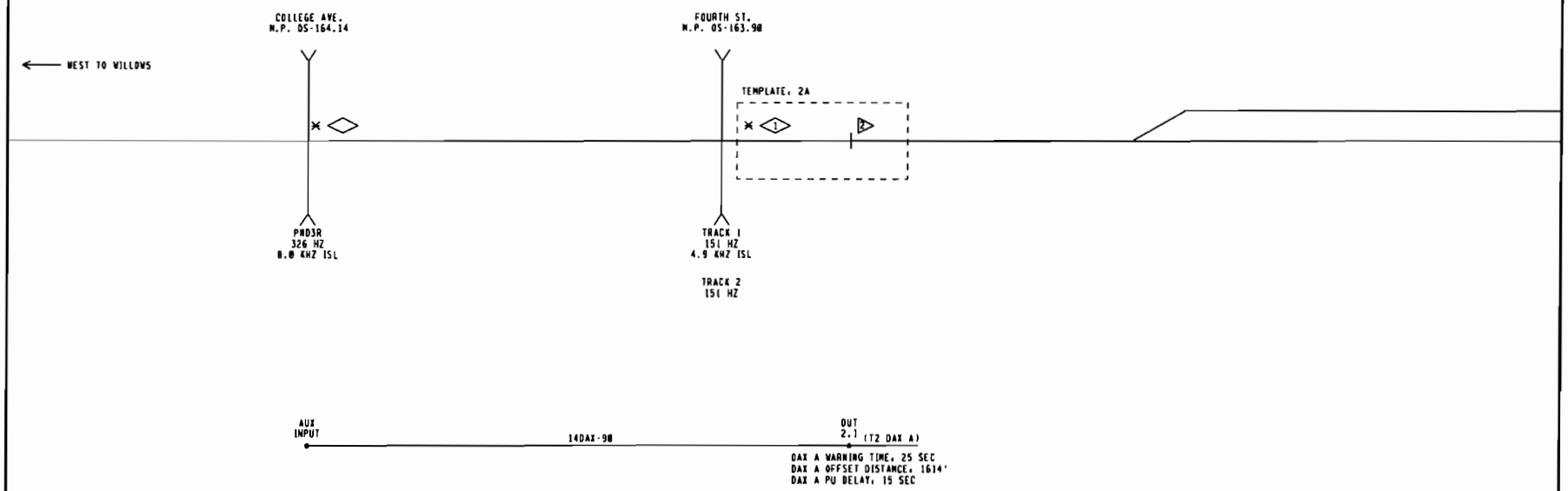

NEW WORK

SAFETRAN systems

PROJECT #: IL2006029
DES/CHKD BY: DPL/SWS
DATE: 06-23-06

SYMBOL	DEFINE	SYMBOL	DEFINE	SYMBOL	DEFINE	SYMBOL	DEFINE	SYMBOL	DEFINE	SYMBOL	DEFINE	SYMBOL	DEFINE	SYMBOL	DEFINE
◇	BI-DIRECTIONAL	◇	SIMULATED BI-DIRECTIONAL	▷	UNI-DIRECTIONAL		GCP 4000 UNIT	✕	ISLAND	UAX	SOFTWARE UAX INPUT	V	EXTERNAL VITAL AND GATE	D	INTERNAL SOFTWARE GATE

4000GCP.G01
REV. 11-10-05

DESIGN DATE	REV. NO.
06-23-06	1

CSX TRANSPORTATION

RAIL TRANSPORT GROUP ENGINEERING
COMMUNICATIONS AND SIGNALS

CP GALE TO WILLOWS

FOURTH ST. (546482M)

INTERNAL SOFTWARE AND GATES LOGIC DIAGRAMS

BROWNSTOWN, IL M.P. OS-163.98

DESIGNED	DIGITIZED	CHECKED	DATE
SAF/DPL	SAF/DPL	SAF/SWS	06-23-06

DRAWING	SHEET NO	FILE	SHEET
0406-1639	13	OS16390	G01

Minimum Program Steps Report

Location and SIN

DOT Number: 546402M
Milepost Number: DS-163.90
Site Name: FOURTH ST

SIN: T12541208716 *

* Parameter is part of office check number calculation.

MCF and Template Selection

MCF Name: GCP-T61-01-2.mcf
MCF Revision: 012
MCFCRC: 00FE7A0C

Template = 2A:4 Bi, 2 Rem *

* Parameter is part of office check number calculation.

Minimum Program Steps

TEMPLATE: track 1-Bi, Island
Track 1 : GCP Frequency = 151 Hz
Track 1 : Approach Distance = 2024 ft See Plans
Track 1 : Prime Warning Time = 25 sec *
Track 1 : GCP Transmit Level = High Set in Field
Track 1 : Isl Frequency = 4.9 kHz

TEMPLATE: track 2-Remote Prime
Track 2 : GCP Frequency = 151 HZ
Track 2 : Approach Distance = 2647 ft See Plans
Track 2 : Prime Warning Time = 25 sec *
Track 2 : Prime Offset Distance = 177 ft Verify in Field
Track 2 : GCP Transmit Level = High Set in Field

TEMPLATE: track 2 Dax4s
Track 2 : Dax A Used = Yes *
Track 2 : Dax A Warning Time = 25 sec *
Track 2 : Dax A Offset Distance = 1614 ft Verify in Field

TEMPLATE: SSCC
SSCC-1 Number of GDs = 1 *
SSCC-2 Number of GPs = 1 *
SSCC-2 Number of GDs = 1 *

TEMPLATE: OP assignment 1
OUT 2.1 = T2 Dax A *

TEMPLATE: IP assignment SSCC
IN 7.2 = Not Used *
IN 8.2 = Out Of Service IP 1 *
IN 8.4 = GD 2.1 *
IN 8.5 = GP 2.1 *

TEMPLATE: SEAR
SP 3.1 = Not Used *

GCP: track 1
Track 1 : GCP Freq Category = Other *
Track 1 : Island Distance = 120 ft *

ADVANCED: out of service
DDS Control = Display DDS IPs *

ADVANCED: out of service 2
T2 DDS Control = DDS Input 1 *

ADVANCED: site options
Daylight Savings = On *

SSCC: 1
SSCC-1 Gate Delay = 5 sec *
SSCC 1 : Flash Rate = 55 *
SSCC 1 : Lamp Neutral Test = Off *

SSCC: 2
SSCC-2 Gate Delay = 5 sec *
SSCC 2 : Flash Rate = 55 *
SSCC 2 : Lamp Neutral Test = Off *

SEAR
DI 1 = Gnd Flt Tester 1 *
DI 2 = Gnd Flt Tester 2 *
Rly 1 = Ground Fault Test *
Rly 2 = AC Control *

SEAR: slot 7-8 inputs
IN 7.1 = TSS 1 *
IN 8.1 = TSS 2 *
IN 8.3 = PDK 2 *

* Parameter is part of office check number calculation.

Office Configuration Check Number

Check Number: 746928C6
(Based on MCF Revision 012)

Parameters not part of office check number calculation.

Track 1 : GCP Frequency = 151 Hz
Track 1 : Approach Distance = 2024 ft See Plans
Track 1 : GCP Transmit Level = High Set in Field
Track 1 : Isl Frequency = 4.9 kHz
Track 2 : GCP Frequency = 151 HZ
Track 2 : Approach Distance = 2647 ft See Plans
Track 2 : Prime Offset Distance = 177 ft Verify in Field
Track 2 : GCP Transmit Level = High Set in Field
Track 2 : Dax A Offset Distance = 1614 ft Verify in Fiel

NEW WORK

SAFETRAN systems

PROJECT #: IL2006029
DES/CHKD BY: DPL/SWS
DATE: 06-23-06

= NOTE

XXXX = OUT

4000GCP.P01
REV. 11-10-05

CSX TRANSPORTATION
RAIL TRANSPORT GROUP ENGINEERING
COMMUNICATIONS AND SIGNALS

CP GALE TO WILLOWS
FOURTH ST. (546402M)
MINIMUM PROGRAM STEPS REPORT CWE-90
BROWNSTOWN, IL M.P. DS-163.90

DESIGNED	DIGITIZED	CHECKED	DATE
SAF/DPL	SAF/DPL	SAF/SWS	06-23-06

DESIGN DATE	REV. NO.	DRAWING	SHEET NO	FILE	SHEET
06-23-06	1	0406-1639	3 (A)	DS16390	P01

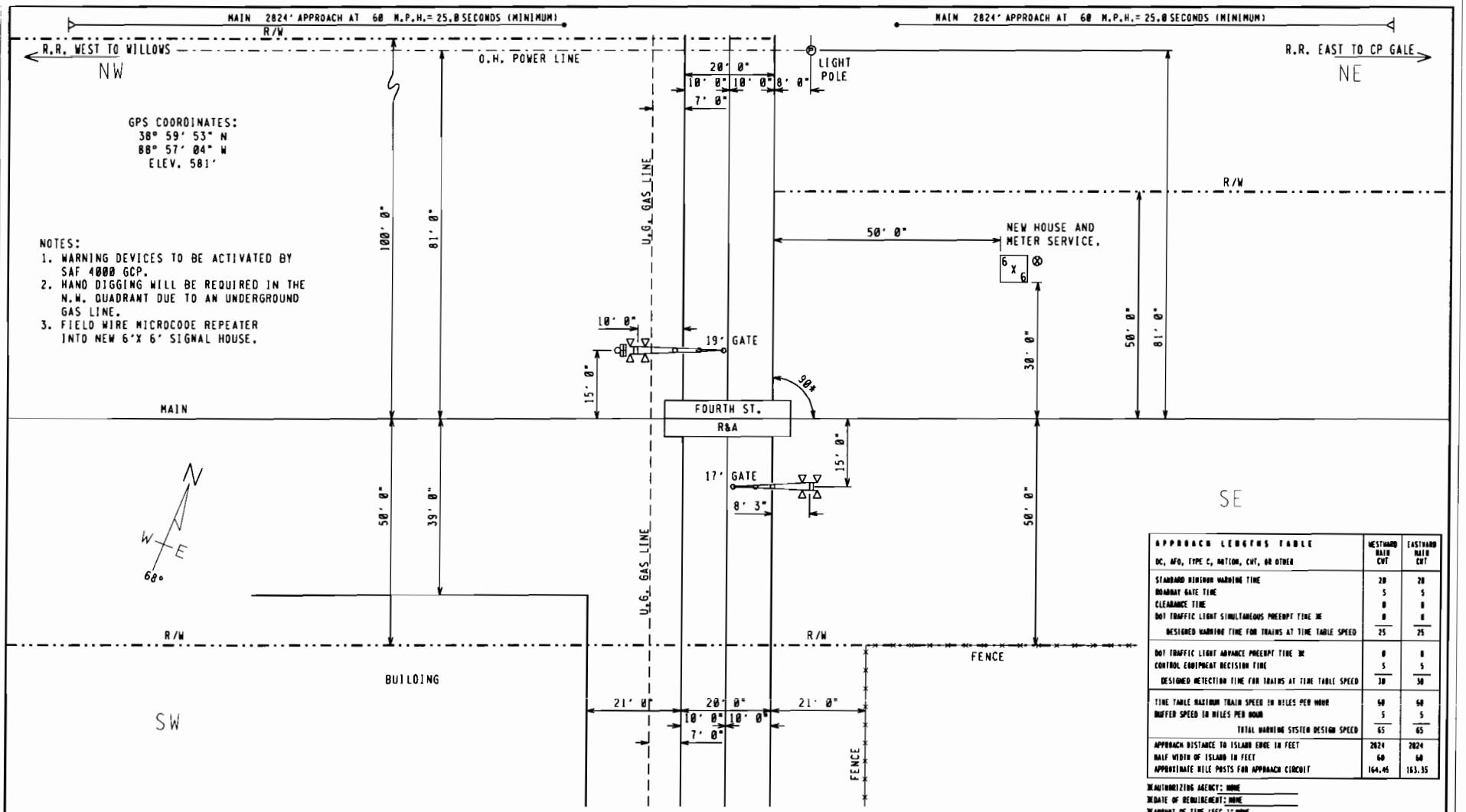

APPROACH LENGTHS TABLE DC, AFO, TYPE C, MOTION, CWT, OR OTHER	WESTBOUND MAIN CWT	EASTBOUND MAIN CWT
STANDARD MINIMUM WARNING TIME	20	20
ROADWAY GATE TIME	5	5
CLEARANCE TIME	0	0
DOT TRAFFIC LIGHT SIMULTANEOUS PREEMPT TIME *	0	0
DESIGNED WARNING TIME FOR TRAINS AT TIME TABLE SPEED	25	25
DOT TRAFFIC LIGHT ADVANCE PREEMPT TIME *	0	0
CONTROL EQUIPMENT DECISION TIME	5	5
DESIGNED DETECTION TIME FOR TRAINS AT TIME TABLE SPEED	30	30
TIME TABLE MAXIMUM TRAIN SPEED IN MILES PER HOUR	60	60
BUFFER SPEED IN MILES PER HOUR	5	5
TOTAL WARNING SYSTEM DESIGN SPEED	65	65
APPROACH DISTANCE TO ISLAND EDGE IN FEET	2824	2824
HALF WIDTH OF ISLAND IN FEET	60	60
APPROXIMATE MILE POSTS FOR APPROACH CIRCUIT	164.45	163.35

*AUTHORIZING AGENCY: NONE
*DATE OF REQUIREMENT: NONE
*AMOUNT OF TIME (SEC.): NONE

FILE NAME: QS16390.H01	REVISION DATES	PRODUCED FOR:	PRODUCED BY:	LEGEND	GUARD RAIL	METER SERVICE ⊗	STREET NAME: FOURTH ST.
DATE DRAWN: 06-06-2006	- -	CSX TRANSPORTATION	SAFETRAN systems	CSX ROW	O.H. POWER	POLE Ⓟ	CITY & STATE: BROWNSTOWN, IL
DRAWN BY: VINCENT ROGERS	- -	RAIL TRANSPORT GROUP ENGINEERING	7775 BAYMEADOWS WAY	R/R POLELINE	FENCE	FIRE PLUG Ⓕ	PROJECT #: IL2006029
CHECKED BY: MICHAEL ALLGOOD	- -	COMMUNICATIONS AND SIGNALS	SUITE 250	GAS	WATER	SEWER CAP Ⓢ	OP #: IL0198
SSC #: E081	- -		JACKSONVILLE, FL 32256	FIBER OPTIC	SEWER	GAS VENT Ⓥ	DOT: 546482M

PROPOSED CROSSING LAYOUT
SCALE = 20:1