Form 3

ORIGINAL

(File original and two duplicates)

STATE OF ILLINOIS

ILLINOIS COMMERCE COMMISSION

Petition for permission to make a major change in crossing protection, or to install new protection under 92 Illinois Administrative Code 1535.400 (d)

X-12871

T09-0038

Date: FEBRUARY 17, 2009

To the Illinois Commerce Commission:

The petitioner UNION PACIFIC 1249521 shows
(name of railroad company)

(1) That it is a railroad company operating a line of railroad in the State of Illinois.

(2) That petitioner proposes and hereby makes application for authority to make a major change in crossing protection, or to install new protection, under 92 Illinois Administrative Code 1535.400 (d) adopted by this Commission.

(3) That the location of the crossing, the nature of protection now established and proposed to be established, and other pertinent facts in connection therewith, are set forth in the statement attached to and forming part of this petition.

(4) That petitioner's reasons and purpose, with reference to its said proposal are

IMPROVE PEDESTRIAN SAFETY AT CROSSINGS ADJACENT TO PASSENGER STATIONS BY INSTALLING PLATFORM DIVERSIONS AND ADDITIONAL PEDESTRIAN CROSSING GATES, COMPLEMENTED BY A "SECOND TRAIN APPROACHING" SYSTEM.

(State reasons and purpose)

(5) That the facts set forth in this petition and in the statement and plans or plats attached thereto, are, all of them, true and correct to the best of petitioner's knowledge and belief.

WHEREFORE, the petitioner prays that the Commission will, if deemed desirable by the Commission, set the aforesaid matter for hearing, and that the Commission enter an order or adopt a resolution consenting to and granting authority for the making of the said proposed changes in or additions to crossing protection.

UNION PACIFIC RAILROAD
(Railroad Company)

By Ronald N. Cholewyk

(Attorney for Petitioner)

(Attorney's Address)

DOCKETED

MAR 19 2009

Statement, attached to and part of an application for permission to make a major change in crossing protection or to install new protection, under 92 Ill. Adm. Code 1535.400 (d).

1. Name of Railroad Company UNION PACIFIC RAILROAD

2. Crossing Number 174952 N
(Separate statement should be filed for each crossing)

3. Village or City WHEATON
(in or near)

4. Name of Street or Highway COLLEGE AVE. (HILL AVE)

5. Public Agency Maintaining Highway
(D.O.T., County, Township, City)

6. Protection now established: (Give full description. Indicate the hours of any manual protection.)
GATES AND FLASHING LIGHTS

7. Protection desired: (Give details) ADDITION OF PEDESTRIAN GATES

8. Number of main tracks 3 Other tracks Ø

9. Number of passenger train movements: 6 a.m. to 6 p.m. 34 6 p.m. to 6 a.m. 18

10. Number of freight train movements: 6 a.m. to 6 p.m. 26 6 p.m. to 6 a.m. 26

11. Approximate number of switch movements: 6 a.m. to 6 p.m. 1 6 p.m. to 6 a.m. 3

12. Maximum speed of trains at crossing on each track in each direction 55 MPH

13. Passenger platforms served by tracks within the limits of track circuits, if any COLLEGE AVE. STATION

14. Where automatic signals or gates are proposed, approximate number of train or engine movements daily which would cause false indications or operation
N/A

15. Nature and approximate amount of street or highway traffic over crossing 3800 AADT

16. In addition to the information listed hereinbefore in Form 3, attach a track plan or plat of the proposed crossing. This plan should show:

(a) Width and surface of highway.
(b) Highway intersections (including private driveways to be so indicated) and location of established highway signs or signals within 100 feet of crossing.
(c) Location of tracks, switches and other railroad facilities such as block signals, etc. within limits of track circuits, present and/or proposed.
(d) Where automatic protection is proposed, show proposed location of signals (side lights, cantilevers, etc., if any).
(e) Show the length of each operating track section within the control limits of the crossing protection and its function.

ADDITIONAL INFORMATION

SEE CIRCUIT PLANS

VERIFICATION

I, THOMAS N. ANDRYUK, first being duly sworn upon oath depose and say that I am MANAGER OF FIELD ENGINEERING of UNION PACIFIC RAILROAD, an DELAWARE corporation; that I have read the above and foregoing petition by me subscribed and know the contents thereof; that said contents are true in substance and in fact, except as to those matters stated upon information and belief, and as to those, I believe same to be true.

UNION PACIFIC RAILROAD
Thomas N. Andryuk

Subscribed and sworn to before me this _____ day of _____ 19____.

Notary Public, Illinois.

174952N

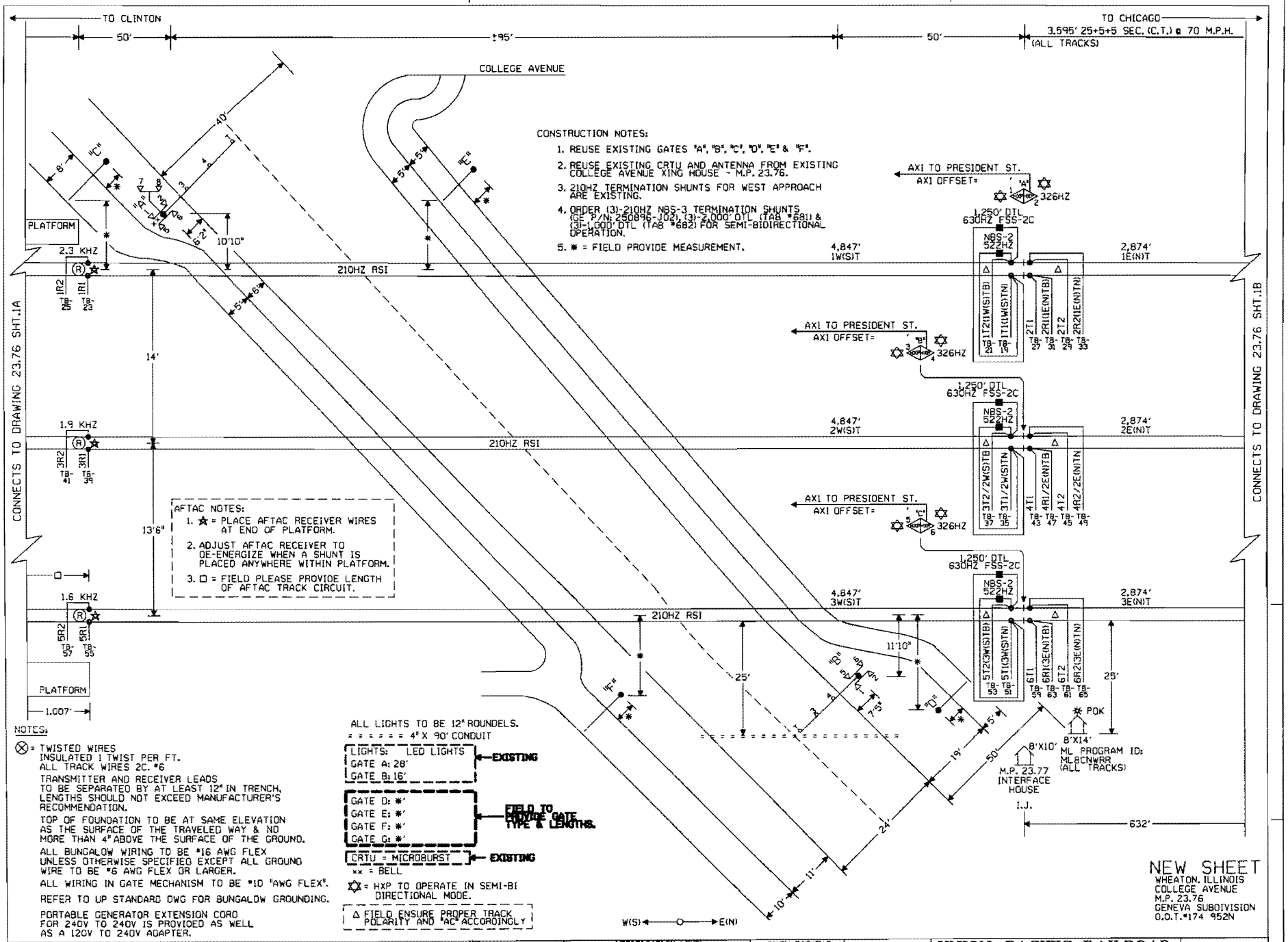

CONSTRUCTION NOTES:

1. REUSE EXISTING GATES "A", "B", "C", "D", "E" & "F".
2. REUSE EXISTING CRTU AND ANTENNA FROM EXISTING COLLEGE AVENUE XING HOUSE - M.P. 23.76.
3. 210HZ TERMINATION SHUNTS FOR WEST APPROACH ARE EXISTING.
4. ORDER (3)-210HZ NBS-3 TERMINATION SHUNTS (GE P/N: 250896-J02), (3)-2,000' DTL (TAB #681) & (3)-1,000' DTL (TAB #682) FOR SEMI-BIDIRECTIONAL OPERATION.
5. * = FIELD PROVIDE MEASUREMENT.

AFTAC NOTES:

1. ☆ = PLACE AFTAC RECEIVER WIRES AT END OF PLATFORM.
2. ADJUST AFTAC RECEIVER TO DE-ENERGIZE WHEN A SHUNT IS PLACED ANYWHERE WITHIN PLATFORM.
3. □ = FIELD PLEASE PROVIDE LENGTH OF AFTAC TRACK CIRCUIT.

NOTES:

⊗ = TWISTED WIRES INSULATED 1 TWIST PER FT. ALL TRACK WIRES 2C. #6

TRANSMITTER AND RECEIVER LEADS TO BE SEPARATED BY AT LEAST 12" IN TRENCH, LENGTHS SHOULD NOT EXCEED MANUFACTURER'S RECOMMENDATION.

TOP OF FOUNDATION TO BE AT SAME ELEVATION AS THE SURFACE OF THE TRAVELED WAY & NO MORE THAN 4" ABOVE THE SURFACE OF THE GROUND.

ALL BUNGALOW WIRING TO BE #16 AWG FLEX UNLESS OTHERWISE SPECIFIED EXCEPT ALL GROUND WIRE TO BE #6 AWG FLEX OR LARGER.

ALL WIRING IN GATE MECHANISM TO BE #10 "AWG FLEX".

REFER TO UP STANDARD DWG FOR BUNGALOW GROUNDING.

PORTABLE GENERATOR EXTENSION CORD FOR 240V TO 240V IS PROVIDED AS WELL AS A 120V TO 240V ADAPTER.

ALL LIGHTS TO BE 12" ROUNDELS.
= = = = = = 4" X 90' CONDUIT

LIGHTS: LED LIGHTS
GATE A: 28'
GATE B: 16'
← EXISTING

GATE D: *'
GATE E: *'
GATE F: *'
GATE G: *'
← FIELD TO PROVIDE GATE TYPE & LENGTHS.

CRTU = MICROBURST ← EXISTING
xx = BELL

☆ = HXP TO OPERATE IN SEMI-BI DIRECTIONAL MODE.

△ FIELD ENSURE PROPER TRACK POLARITY AND "AC" ACCORDINGLY

NEW SHEET
WHEATON, ILLINOIS
COLLEGE AVENUE
M.P. 23.76
GENEVA SUBDIVISION
O.O.T.#174 952N

I	06-16-08 INSTALL HALF BLOCK SYSTEM FROM COLLEGE AVE. TO LOMBARD, ILL. PHASE 2 PART 2: (MP. 23.76 TO MP. 20.41) AFE #89952 JJL /CTC/MDF	MODIFICATION LEVEL		UNION PACIFIC	DES: CTC	UNION PACIFIC RAILROAD	DATE 06-16-08
		O. A. LAST LEVEL CHECKED	DQ		DIG: CTC	CHICAGO, ILLINOIS TO CLINTON, IOWA C.T.C. CIRCUITS	SHEET 1
		LAST LEVEL MOD THIS TYPICAL	DQ		CHK: JJL		DWG 23.76
		LAST LEVEL BY DESIGNER	DQ		A.F.E. 89952		GEN
		CHANGED FROM TYPICAL?	Y	SIGNAL DESIGN	ID= GEN2376.IX	Office of Sr. AVP Engineering - Signal/TCO Omaha, Nebraska	

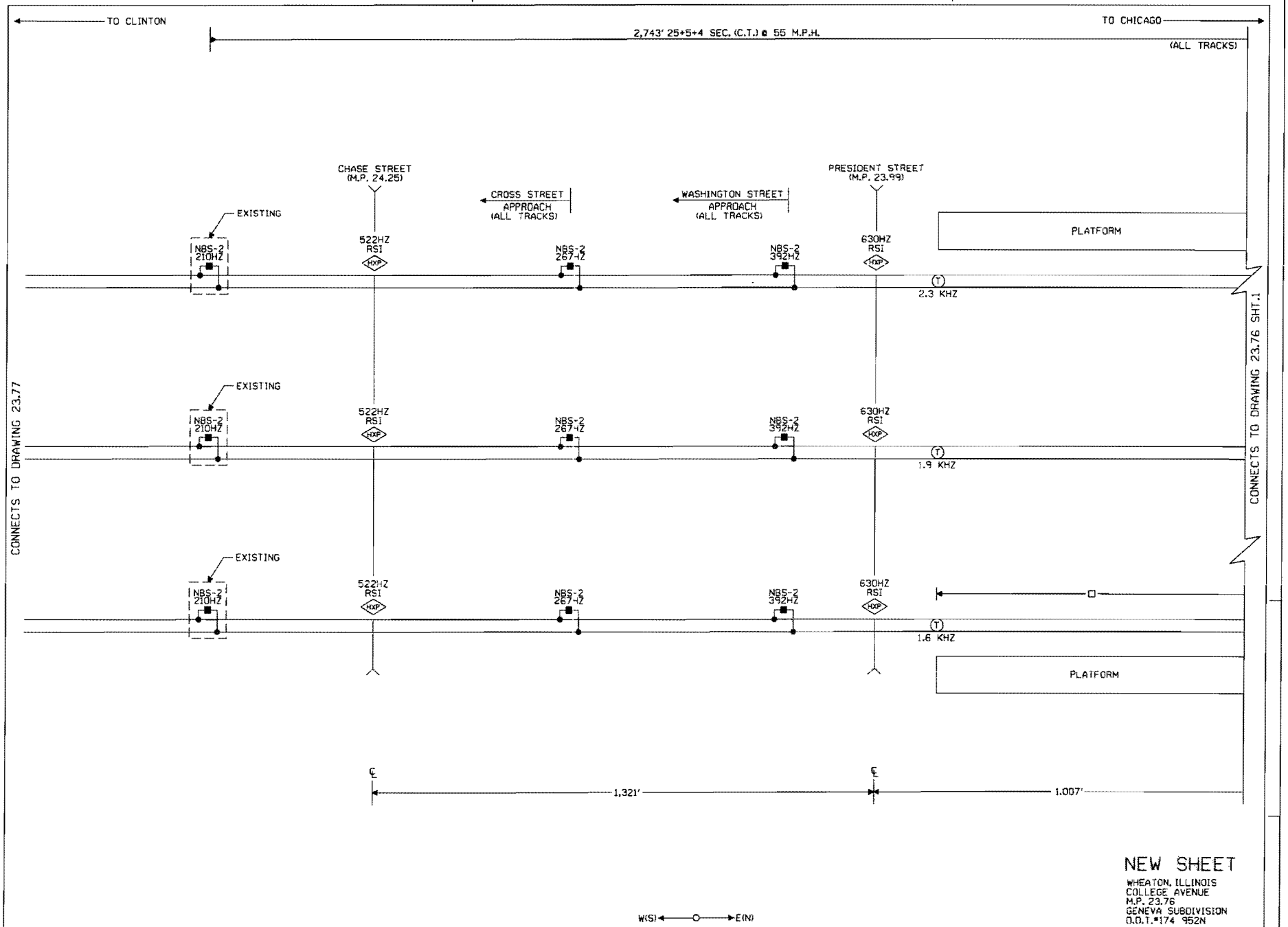

NEW SHEET

WHEATON, ILLINOIS
COLLEGE AVENUE
M.P. 23.76
GENEVA SUBDIVISION
O.D.T.#174 952N

					1 06-16-08 INSTALL HALF BLOCK SYSTEM FROM COLLEGE AVE. TO LOMBARD, ILL. PHASE 2 PART 2. MP. 23.76 TO MP. 20.41 AFE #89952 J.J.L. / /CTC/MGF	MODIFICATION LEVEL		UNION PACIFIC SAFETY QUALITY PRODUCTIVITY SIGNAL DESIGN	DES: CTC	UNION PACIFIC RAILROAD	DATE 06-16-08
						Q. A. LAST LEVEL CHECKED	DQ		DIG: CTC	CHICAGO, ILLINOIS TO CLINTON, IOWA C.T.C. CIRCUITS	SHEET 1A
						LAST LEVEL MOD THIS TYPICAL	DQ		CHK: JJL		DWG 23.76
						LAST LEVEL BY DESIGNER	DQ		A.F.E. 89952		GEN
						CHANGED FROM TYPICAL?	Y		ID= GEN2376.1AX	Office of Sr AVP Engineering - Signal/TCO Omaha, Nebraska	

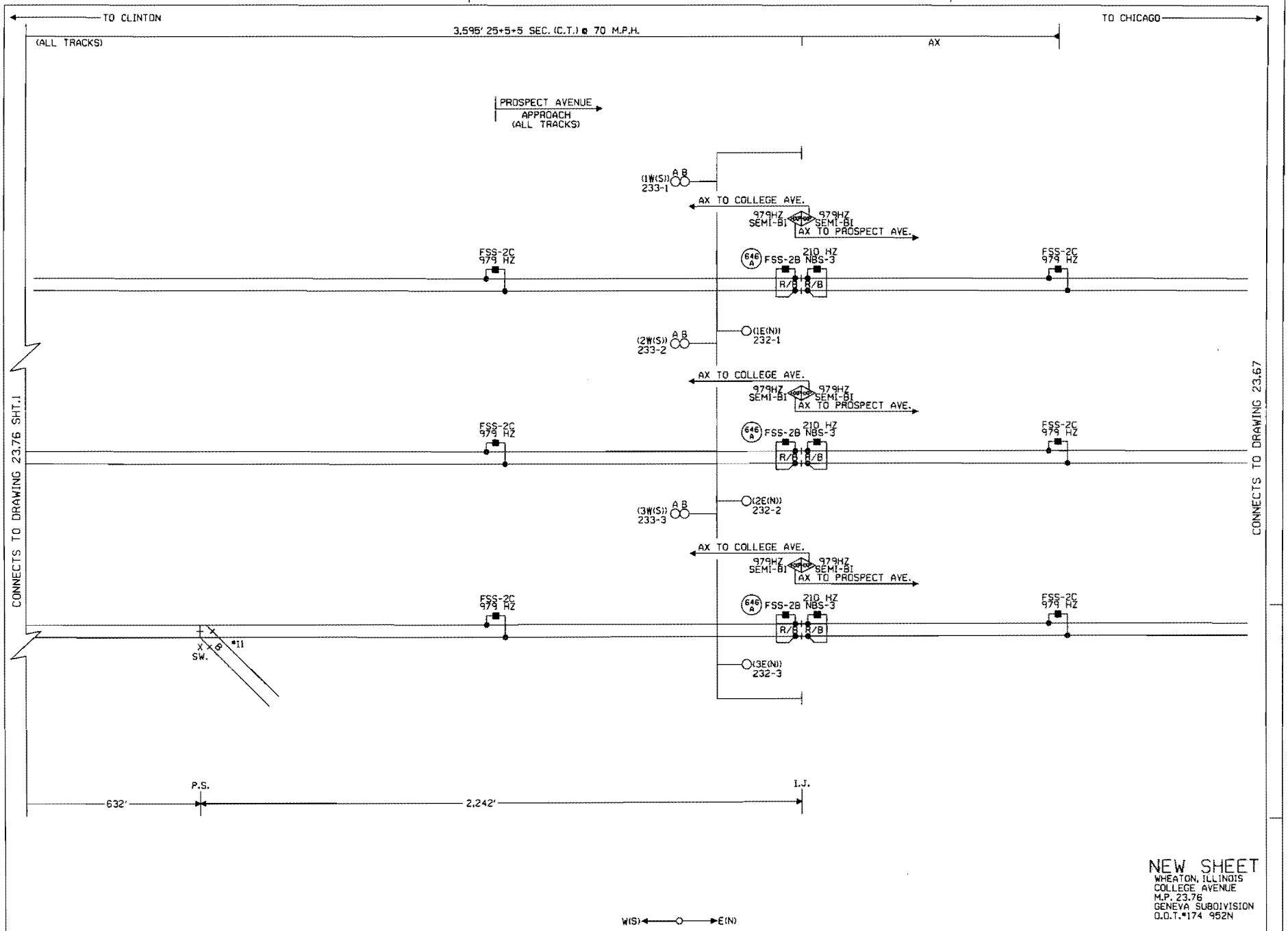

NEW SHEET
WHEATON, ILLINOIS
COLLEGE AVENUE
M.P. 23.76
GENEVA SUBDIVISION
O.D.T.*174 952N

					1 06-16-08 INSTALL HALF BLOCK SYSTEM FROM COLLEGE AVE. TO LOMBARD, ILL. PHASE 2 PART 2. (MP. 23.76 TO MP. 20.41) AFE *89952 JJL /CTC/MOF	MODIFICATION LEVEL		UNION PACIFIC SAFETY SIGNAL DESIGN	DES: CTC DIG: CTC CHK: JJL A.F.E. 89952 ID= GEN2376.1BX	UNION PACIFIC RAILROAD CHICAGO, ILLINOIS TO CLINTON, IOWA C.T.C. CIRCUITS Office of Sr AVP Engineering - Signal/CTC Omaha, Nebraska	DATE 06-16-08 SHEET 1B DWG 23.76 GEN
						O. A. LAST LEVEL CHECKED	DO				
						LAST LEVEL MOD THIS TYPICAL	DO				
						LAST LEVEL BY DESIGNER	DO				
						CHANGED FROM TYPICAL?	Y				

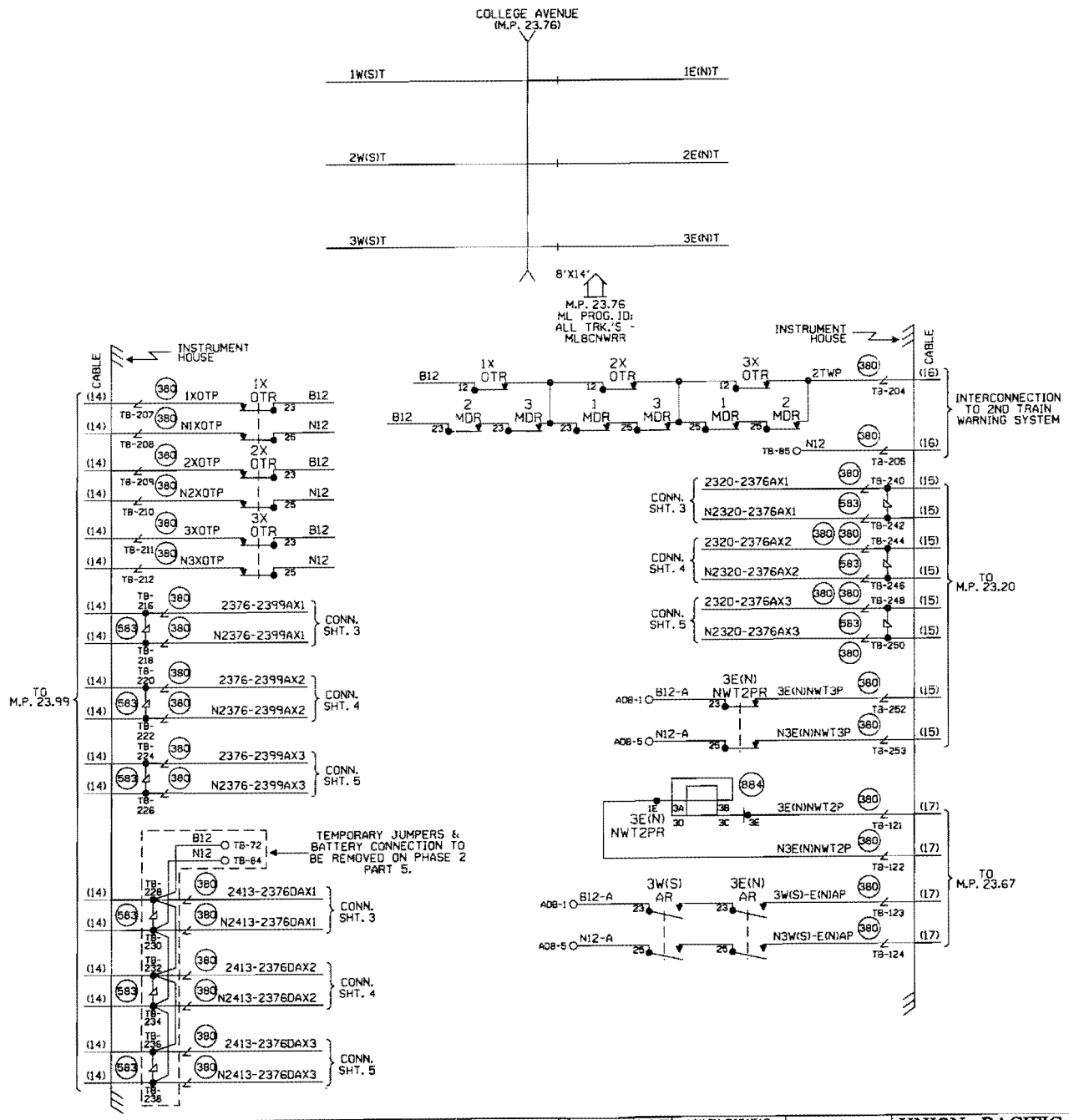

NEW SHEET

WHEATON, ILLINOIS
COLLEGE AVENUE
M.P. 23.76
GENEVA SUBDIVISION
D.O.T.#174 952N

1 06-16-08 INSTALL HALF BLOCK SYSTEM FROM COLLEGE AVE. TO LOMBARD, ILL. PHASE 2 PART 2. (MP. 23.76 TO MP. 20.41) AFE #89952 JJL / /CTC/MOF	UNION PACIFIC SAFETY QUALITY PRODUCTIVITY SIGNAL DESIGN	DES: CTC DIG: CTC CHK: JJL A.F.E. 89952 ID= GEN2376.1CX	**UNION PACIFIC RAILROAD** CHICAGO, ILLINOIS TO CLINTON, IOWA C.T.C. CIRCUITS Office of Sr AVP Engineering - Signal/TCO Omaha, Nebraska	DATE 06-16-08 SHEET 1C DWG 23.76 GEN	

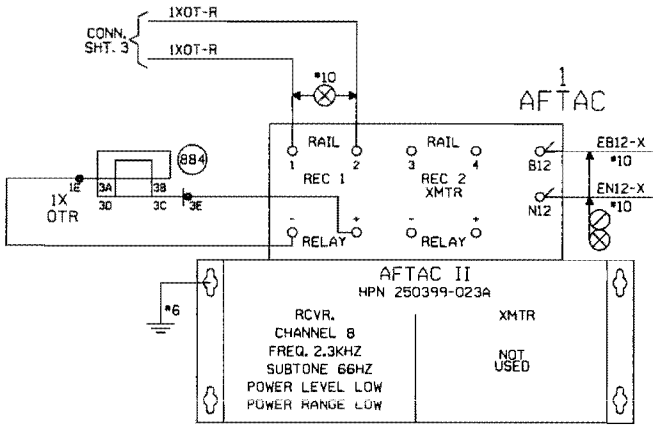

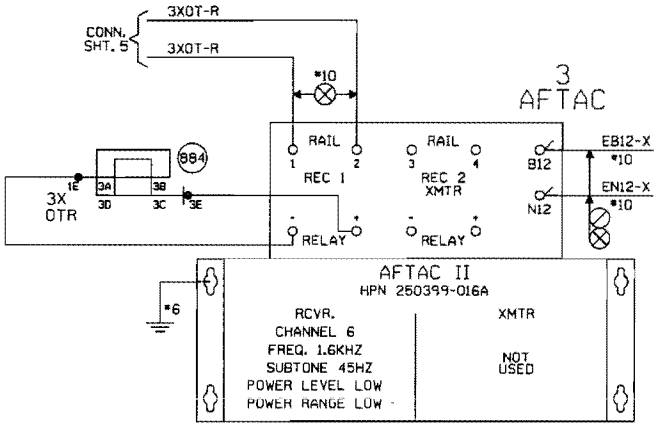

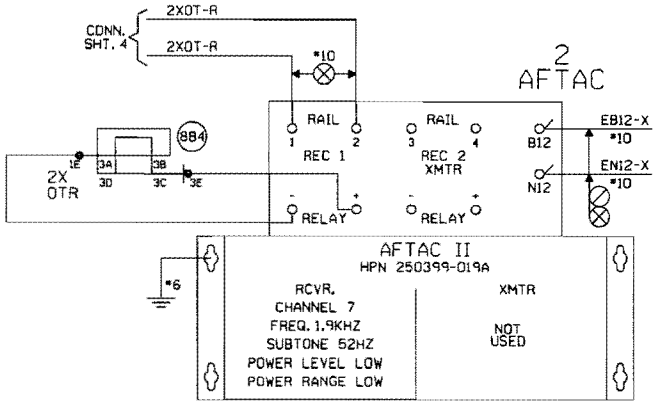

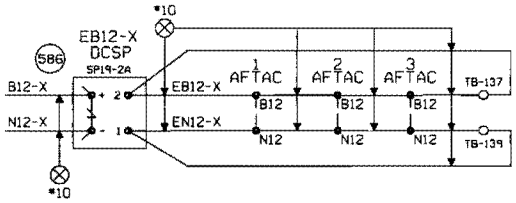

NEW SHEET

WHEATON, ILLINOIS
COLLEGE AVENUE
M.P. 23.76
GENEVA SUBDIVISION
O.O.T.#174 952N

1	06-16-08 INSTALL HALF BLOCK SYSTEM FROM COLLEGE AVE. TO LOMBARD ILL. PHASE 2 PART 2 (MP. 23.76 TO MP. 20.41) AFE #89952 JJL /CTC/MDF

UNION PACIFIC
SAFETY QUALITY PRODUCTIVITY
SIGNAL DESIGN

DES:	CTC
DIG:	CTC
CHK:	JJL
A.F.E.	89952
ID=	GEN2376.10X

UNION PACIFIC RAILROAD

CHICAGO, ILLINOIS TO
CLINTON, IOWA
C.T.C. CIRCUITS

Office of Sr. AVP Engineering - Signal/TCD Omaha, Nebraska

DATE	06-16-08
SHEET ID	
DWG	23.76
	GEN

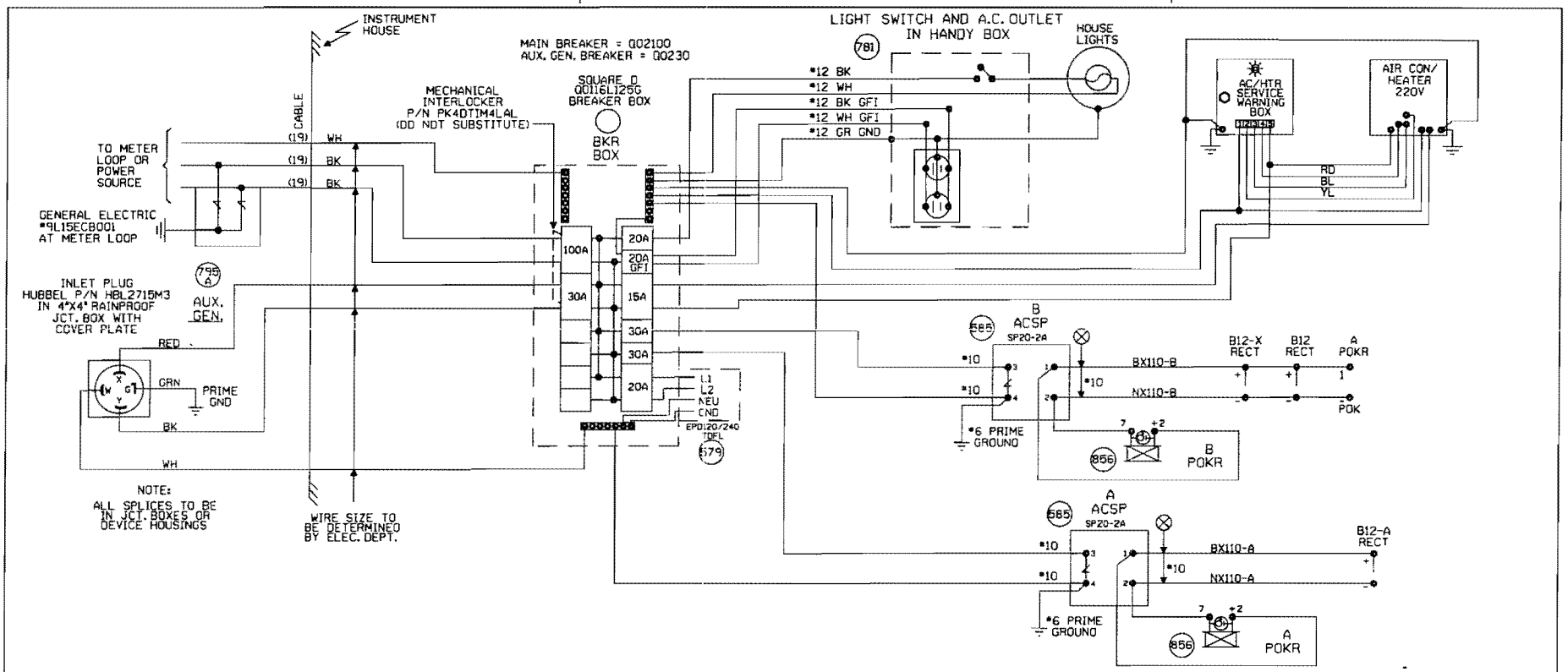

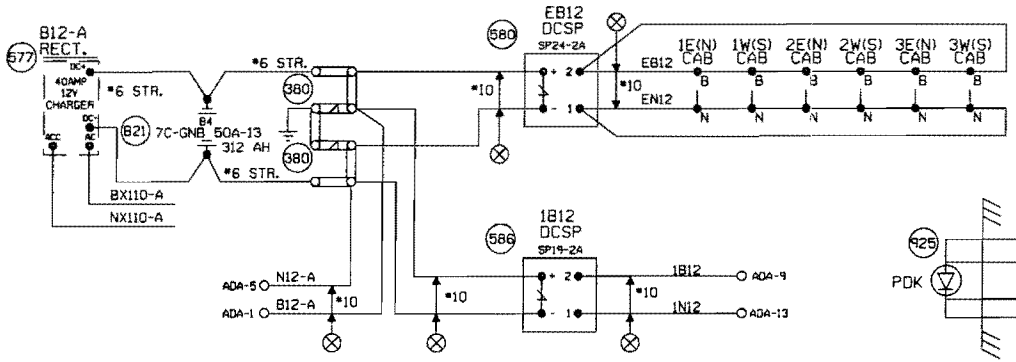

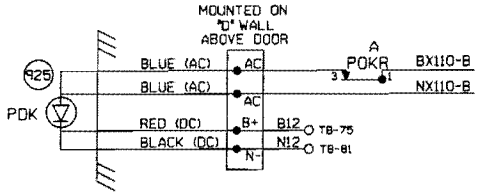

CABLE TABULATION

CABLE NO.14	19C.NO.14 U.G.B.T. HOUSE TO M.P. 23.99.
CABLE NO.15	12C.NO.14 U.G.B.T. HOUSE TO M.P. 23.20.
CABLE NO.16	U.G.B.T. HOUSE TO 2ND TRAIN WARNING SYSTEM.
CABLE NO.17	7C.NO.14 U.G.B.T. HOUSE TO M.P. 23.67.
CABLE NO.18	(3)-5C.NO.6 U.G.B.T. HOUSE TO M.P. 23.77.
CABLE NO.19	TO BE DETERMINED BY NATIONAL STANDARD ELECTRICAL CODE

NEW SHEET
WHEATON, ILLINOIS
COLLEGE AVENUE
M.P. 23.76
GENEVA SUBDIVISION
D.O.T.#174 952N

1	06-16-08	INSTALL HALF BLOCK SYSTEM FROM COLLEGE AVE. TO LOMBARD, ILL. PHASE 2 PART 2. MP. 23.76 TO MP. 20.41 AFE #89952 JJL /CTC/NDF

MODIFICATION LEVEL	
Q. A. LAST LEVEL CHECKED	DG
LAST LEVEL MOD THIS TYPICAL	DG
LAST LEVEL BY DESIGNER	DG
CHANGED FROM TYPICAL?	Y

UNION PACIFIC SAFETY SIGNAL DESIGN

DES: CTC
DIG: CTC
CHK: JJL
A.F.E. 89952
ID= GEN2376.2X

UNION PACIFIC RAILROAD
CHICAGO, ILLINOIS TO CLINTON, IOWA
C.T.C. CIRCUITS
Office of Sr. AVP Engineering - Signal/TCO Omaha, Nebraska

DATE 06-16-08
SHEET 2
DWG 23.76
GEN

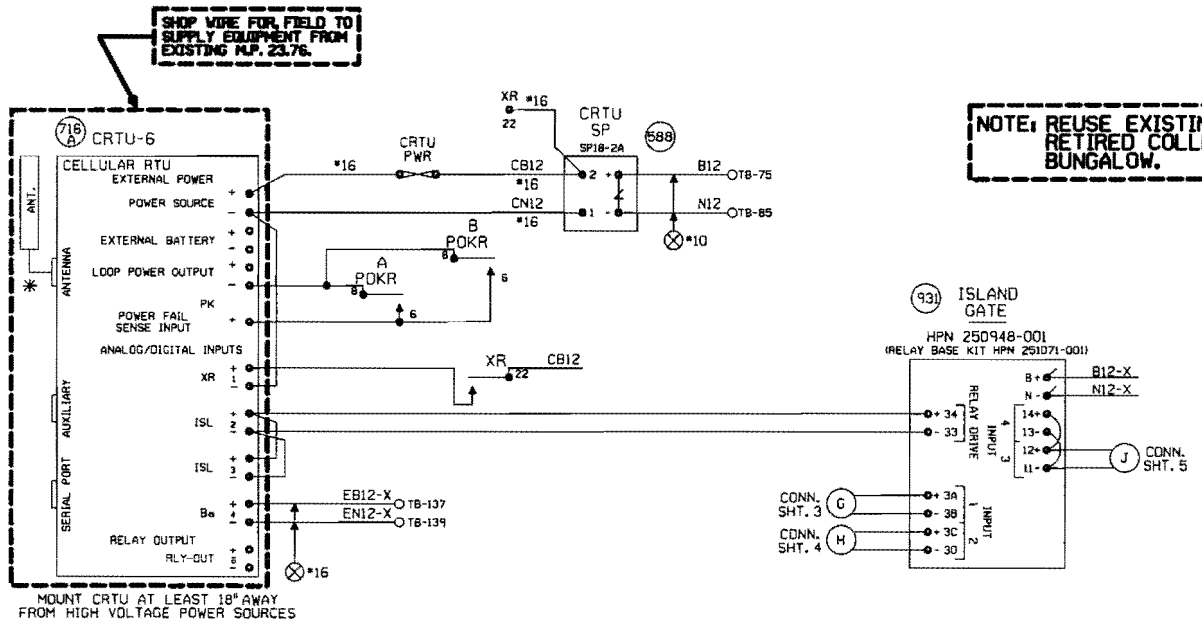

NOTE: REUSE EXISTING CRTU FROM RETIRED COLLEGE AVENUE XING BUNGALOW.

NOTES:

ALL DIODES 1N5060 OR 1N4004 UNLESS OTHERWISE NOTED.

MOUNT ANTENNA ON TOP OF HOUSE.

ALL WIRES #18 UNLESS OTHERWISE NOTED.

ALL UNUSED 'NC' INPUTS MUST BE TIED HIGH TO BATTERY

ALL UNUSED ANALOG INPUTS MUST BE TIED HIGH TO BATTERY

ALL UNUSED 'NO' INPUTS MUST BE DISCONNECTED

ANALOG AND AC INPUT MODULES MUST BE MOUNTED LESS THAN 12" FROM CRTU

CRTU FRONT PANEL DISPLAY CHART INDICATES NORMAL STATE

■ DIGITAL INPUT HIGH, OR POWER FAIL INPUT CLOSED

□ DIGITAL INPUT LOW, OR POWER FAIL INPUT OPEN

NORMAL STATE FOR ANALOG CHANNELS IS EQUAL TO THE STORED NOMINAL VOLTAGE +120% OR -81%

■ L ← LATCH IS SET BECAUSE CRTU DETECTED AN ALARM CONDITION

12.06V L ←

'sRUN MODE' 'sRUN MODE-SILENT'

CRTU RADIO IS DISABLED. REPROGRAM CRTU WITH LAPTOP.

UNIT INSTALLATION AND SETUP

R.R. SITE ID WHERE; SSSS = 4 CHARACTER SUBDIVISION ID. FILL WITH PRECEDING ZEROS AS REQUIRED. THE MAIN TRACK SUBDIVISION ID* IS IN THE CURRENT TIMETABLE. INDUSTRIAL LEADS, LEASED, AND LEAD TRACKS LISTED WITHIN THE SUBDIVISION MAY HAVE THEIR OWN UNIQUE SUBDIVISION ID*. ALWAYS REFER TO CURRENT PRINTED COPY OF THE TIMETABLE.
LLLLLLLL = 8 CHARACTERS USE DOT* AT CROSSINGS, AND
WDLLLLLL = USE 'WD' THEN MP* AT WAYSIDE LOCATIONS.
EXAMPLE = D785WD1801.SUT
HBLLLLLL = USE 'HB' THEN MP* AT HBD SITES.
EXAMPLE = D100-HB55.62TX
THE MP* MUST USE A DECIMAL POINT TO SEPARATE NUMBERS. FILL WITH PRECEDING DASHES AS REQUIRED.
AA = 2 CHARACTER STATE NAME FOR ALL LOCATIONS, MUST BE 14 CHARACTERS LONG, NO SPACES ALLOWED.

SITE IDENTIFIER: SSSSLLLLLLLLAA	0001-174952NIL
OPERATION TO RESUME: RUN	
SIGNAL STRENGTH dBm	-95dBm
CARRIER ID	00020
FIRMWARE VERSION	2.3.012
BOOT VERSION:	
CMM VERSION:	
SERIAL NUMBER	03-03101-2801
MIN ASSIGNMENT	
ESN: (MICROBURST ONLY)	
CONFIGURATION NET	MICROBURST
SILENCE INTERVAL	60 MINUTES
HEALTHCHECK INTERVAL	EVERY 2 DAYS
ALARM DEFER DELAY	240 MINUTES (4 HOURS)
SIGNAL STATUS	GOOD
SCADANET STATUS	GOOD
CALIBRATION CONSTANT CH1	
CALIBRATION CONSTANT CH2	
CALIBRATION CONSTANT CH3	
CALIBRATION CONSTANT CH4	13.42
CALIBRATION CONSTANT PS	15.10

FIELD PROVIDES: SAMPLED NOMINAL VOLTAGES, SCADANET STATUS CALIBRATION CONSTANTS, SERIAL NUMBER, AND SIGNAL STATUS.

CHANNEL SETUP - STANDARD CONFIGURATION 11:XR,ISL,ISL,Ba

CHANNEL NORMAL STATE	SENSE (NO/NC)	NAME FUNCTION	RECOGNITION DELAY SECONDS ACTIVE	RECOGNITION DELAY SECONDS NORMAL	RETURN TO NORMAL	REPORTING MODE	ALARM LINKED CHANNEL	ALARM LINKED CRITERIA	EVENT LOGGING ENABLED OPTIONS
POWER FAIL (CH5) ■	POWER FAIL DETECT NO	PFm-PK AC POWER FAIL	7,200 ALARM	300 NORMAL	ENABLED	ALERT	DISABLED	N/A	
CH1 □ ■	DIGITAL INPUT NO	CH1-XR XR DOWN TO LONG	1,800 ALARM	1 NORMAL	ENABLED	ALERT	DISABLED	N/A	
CH2 ■ □	DIGITAL INPUT NC	CH2-ISL ISLONLY ISLAND OCCUPIED DAX, PREEMPT WARNING TIME	1 ACTIVE	1 NORMAL	DISABLED	STATUS ONLY	DISABLED	N/A	
CH3 ■ □	DIGITAL INPUT NC	CH3-ISL ISLAND OCCUPIED DAX, PREEMPT WARNING TIME	1 ACTIVE	1 NORMAL	DISABLED	STATUS ONLY	DISABLED	N/A	DIGITAL EVENTS
CH4 STORED NOMINAL VOLTAGE	ANALOG INPUT N/A	CH4-Ba/V BATTERY MONITOR BATTERY LOW	600 ALARM	1200 NORMAL	ENABLED	ALERT W/UPDATE	DISABLED	N/A	CH1-XR CH2-ISL CH3-ISL
POWER SOURCE (CH6)	ANALOG INPUT N/A	PS-Ba/V BATTERY MONITOR BATTERY LOW	600 ALARM	1200 NORMAL	ENABLED	ALERT W/UPDATE	DISABLED	N/A	

ANALOG CHANNEL	USEFUL RANGE VOLTS LOW	USEFUL RANGE VOLTS HIGH	DISPLAYED RANGE VOLTS LOW	DISPLAYED RANGE VOLTS HIGH	RELATIVE ALARM POINT LOW	RELATIVE ALARM POINT HIGH	ABSOLUTE ALARM POINT LOW	ABSOLUTE ALARM POINT HIGH	AUTOMATIC UPDATE INTERVAL	STORED NOMINAL VOLTAGE	SAMPLED NOMINAL VOLTAGE
CH4	0.0	30.00	0.0	30.00	81%	120%	10.0	29.0	14 DAYS	12.69	
POWER SOURCE	0.0	30.00	0.0	30.00	81%	120%	10.0	29.0	14 DAYS	12.69	

RELAY OUTPUT	NAME	ACTIVE	NORMAL	PULSE DURATION	
	RLY-OUT	SET-UP-OPEN	CLR-ON-CLOSE	15 SECONDS	StdCfg Ver: 2.3.3 REV'D 9-20-02

MAINTENANCE OPERATIONS

TO START OR ABORT ANY PROCEDURE

1. PRESS THE 'CANCEL' BUTTON FIRST

WHEN RESPONDING TO A CALL, PUT THE CRTU IN THE 'SILENCE ALARMS' MODE

1. PRESS 'SELECT' AND THEN '+ ARROW' BUTTON UNTIL
   DISPLAY: ACTION?
   SILENCE ALARMS
2. PRESS THE 'SELECT' BUTTON TWICE
3. CORRECT PROBLEM AND SIMULATE NORMAL TRAIN MOVEMENT THROUGH THE LOCATION
4. EXAMINE EACH CHANNEL ON THE CRTU
5. PRESS THE '+/- ARROW' BUTTON
   VERIFY ALL CHANNELS INDICATE A NORMAL STATE
   NORMAL STATES ARE ON THE CHANNEL SETUP CHART

CLEAR TIMERS, LATCHES AND SEND ALL NORMAL

1. DO STEPS #1 - #5 ABOVE, AND PRESS 'CANCEL'.
2. PRESS 'SELECT' AND THEN '- ARROW' BUTTON UNTIL
   DISPLAY: ACTION?
   SERVICE MODE
3. PRESS 'SELECT' AGAIN TO RESET TIMERS, AND IF
   DISPLAY: SERVICE MODE
   ALL NORMAL
4. PRESS 'SELECT' AGAIN TO CLEAR LATCHES, AND SEND ALL NORMAL. SKIP STEPS #5-#6.
5. HOWEVER, IF ALARMS ARE NOT CLEARED:
   DISPLAY: SERVICE MODE
   ALARMS PENDING/PRESENT
6. PRESS 'CANCEL', CORRECT PROBLEM AND REPEAT STEPS #2 THRU #5 UNTIL ALL NORMAL SENT.

TO CANCEL THE 'SILENCE ALARMS' MODE

1. PRESS 'SELECT' AND THEN '+ ARROW' BUTTON UNTIL
   DISPLAY: ACTION?
   CANCEL SILENCE
2. PRESS THE 'SELECT' BUTTON AGAIN

EXAMINE & SET BATTERY VOLTAGE NOMINAL VALUE

1. PRESS THE '+ ARROW' OR '- ARROW' BUTTON UNTIL THE DESIRED CHANNEL IS DISPLAYED.
   DISPLAY: PS-Ba:
   13.83V NORMAL
2. VERIFY THE DISPLAYED READING WITH A DIGITAL VOLTMETER
3. PRESS THE 'SELECT' BUTTON, AND THE CRTU DISPLAY WILL SWITCH BETWEEN CURRENT/SAVED NOMINAL VOLTAGE VALUES.
   DISPLAY: NOMINAL ON #67 (CURRENT)
   13.83
   DISPLAY: SAVED NOMINAL 6 (STORED)
   12.69
4. PRESS THE 'SELECT' BUTTON AND THE CURRENT OR 'NOMINAL ON' VALUE WILL BE SAMPLED AND STORED AS THE 'SAVED NOMINAL' VALUE
5. VERIFY THE 'NOMINAL ON' AND 'SAVED NOMINAL' VALUES ARE EQUIVALENT, REPEAT STEPS #1 THRU #3 & PRESS THE 'CANCEL' BUTTON.

NEW SHEET
WHEATON, ILLINOIS
COLLEGE AVENUE
M.P. 23.76
GENEVA SUBDIVISION
D.O.T.#174 952N

1	06-16-08	INSTALL HALF BLOCK SYSTEM FROM COLLEGE AVE. TO LOMBARDI ILL. PHASE 2 PART 2. MP. 23.76 TO MP. 20.41 AFE #89952	JJL /CTC/MOF

UNION PACIFIC — QUALITY PRODUCTIVITY SAFETY — SIGNAL DESIGN

DES: CTC
DIG: CTC
CHK: JJL
A.F.E. 89952
ID: GEN2376.2AX

UNION PACIFIC RAILROAD
CHICAGO, ILLINOIS TO CLINTON, IOWA
C.T.C. CIRCUITS
Office of Sr AVP Engineering - Signal/TCO Omaha, Nebraska

DATE 06-16-18
SHEET 2A
DWG 23.76
GEN

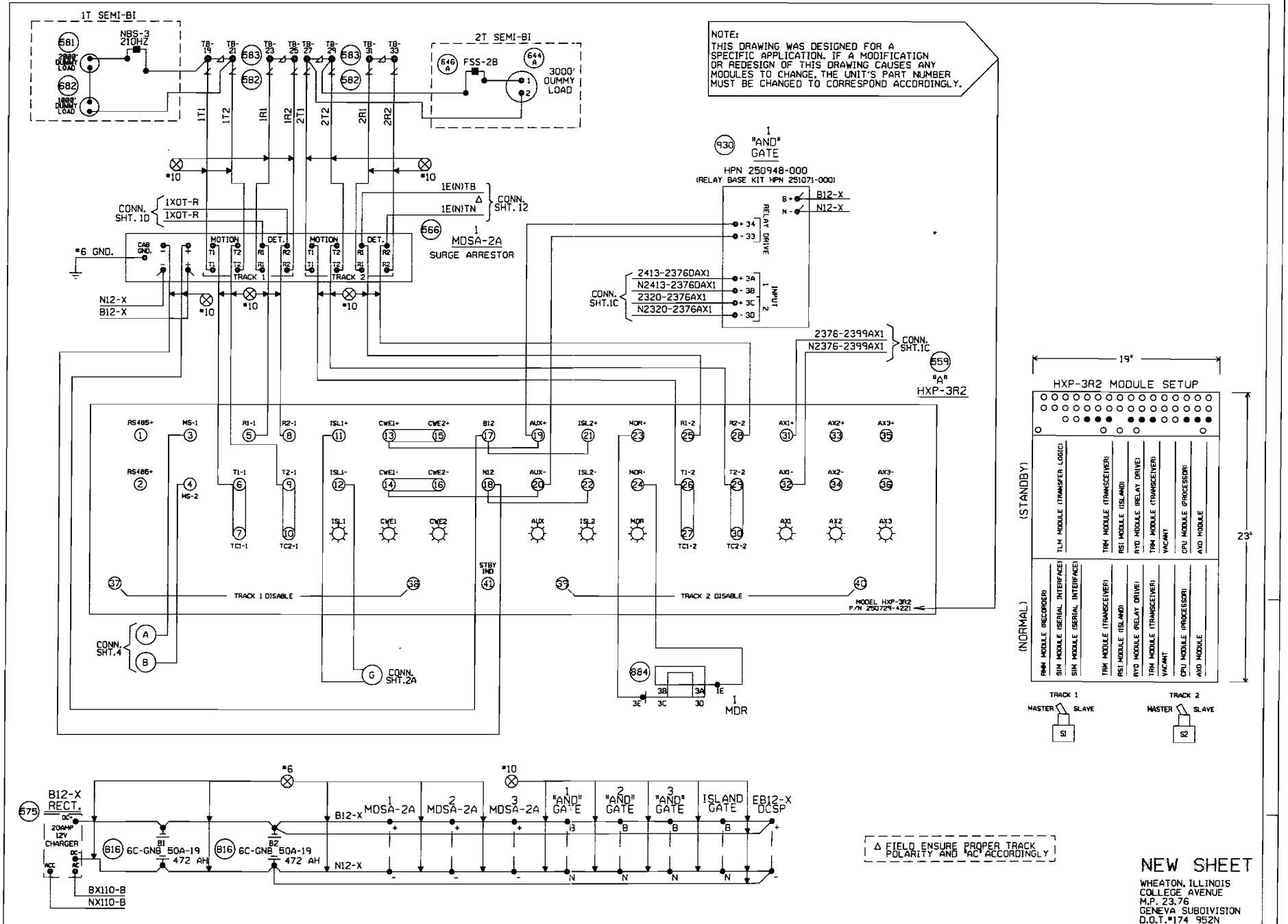

NEW SHEET

WHEATON, ILLINOIS
COLLEGE AVENUE
M.P. 23.76
GENEVA SUBDIVISION
D.O.T.#174 952N

1 06-16-08 INSTALL HALF BLOCK SYSTEM FROM COLLEGE AVE. TO LOMBARD ILL. PHASE 2 PART 2. (MP. 23.76 TO MP. 20.41) AFE #89952 J.B. / /CTC/MDF	MODIFICATION LEVEL		UNION PACIFIC QUALITY PRODUCTIVITY SAFETY SIGNAL DESIGN	DES: CTC	UNION PACIFIC RAILROAD	DATE 06-16-08
	O.A. LAST LEVEL CHK'D.	DD		DIG: CTC	CHICAGO, ILLINOIS TO CLINTON, IOWA	SHEET 3
	LAST LEVEL MOD. THIS TYP.	DB		CHK: JJL	C.T.C. CIRCUITS	DWG 23.76
	LAST LEVEL BY DESIGNER.	DQ		A.F.E. 89952		GEN
	CHANGED FROM TYP.? Y/N	Y		ID: GEN2376.3X	Office of Sr AVP Engineering - Signal/TCO Omaha, Nebraska	

(REV. 01.02.21) (HX32TKUG.4)

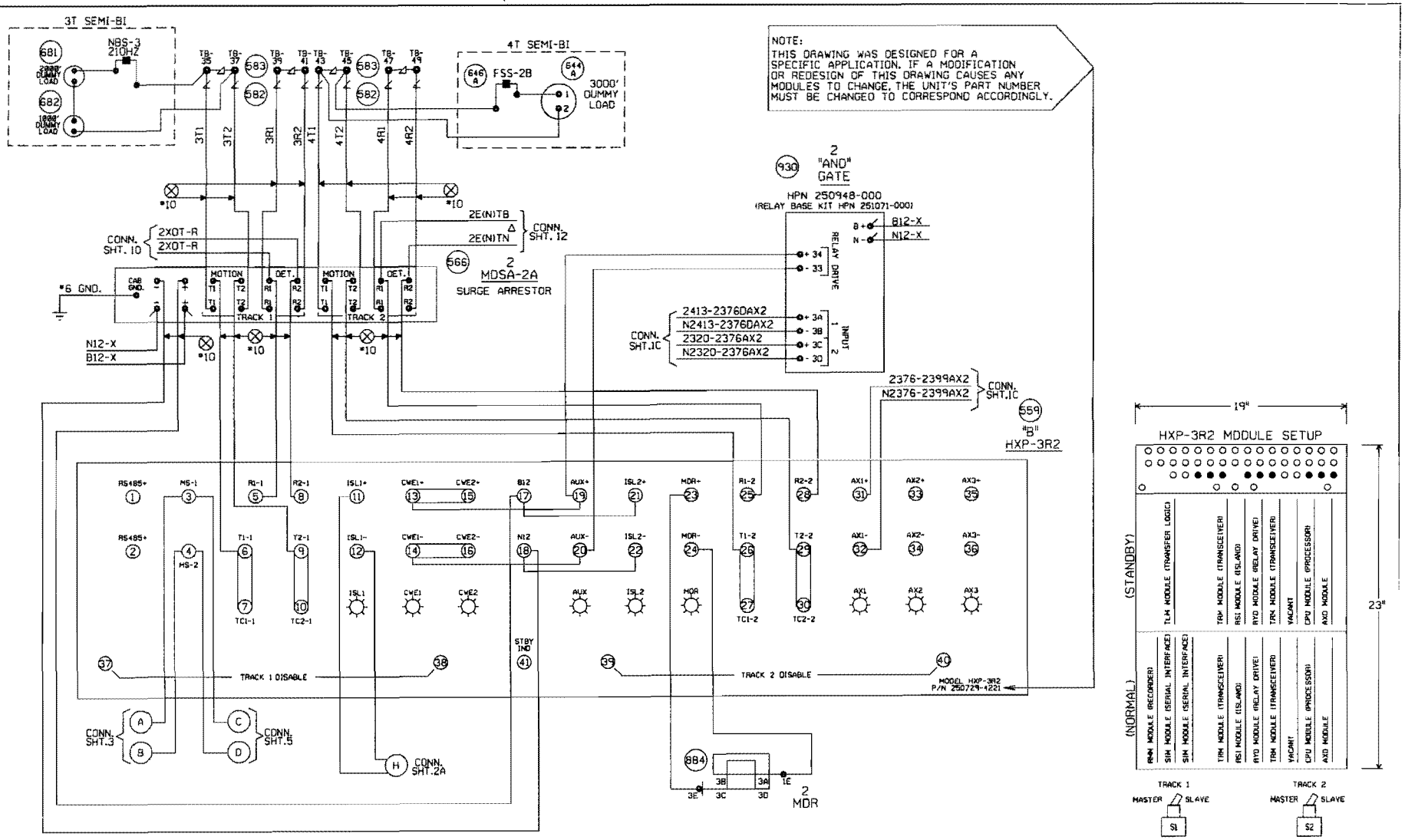

NOTE:
THIS DRAWING WAS DESIGNED FOR A SPECIFIC APPLICATION. IF A MODIFICATION OR REDESIGN OF THIS DRAWING CAUSES ANY MODULES TO CHANGE, THE UNIT'S PART NUMBER MUST BE CHANGED TO CORRESPOND ACCORDINGLY.

Δ FIELD ENSURE PROPER TRACK POLARITY AND "AC" ACCORDINGLY

NEW SHEET
WHEATON, ILLINOIS
COLLEGE AVENUE
M.P. 23.76
GENEVA SUBDIVISION
O.D.T.#174 952N

1 06-16-08 INSTALL HALF BLOCK SYSTEM FROM COLLEGE AVE. TO CONBARD, ILL. PHASE 2 PART 2: MP.23.76 TO MP. 20.41 AFE #89952 J.JL /CTC/NDF	MODIFICATION LEVEL		UNION PACIFIC SAFETY SIGNAL DESIGN	DES: CTC	UNION PACIFIC RAILROAD	DATE 06-16-08
	O.A. LAST LEVEL CHK'D.	DD		DIG: CTC	CHICAGO, ILLINOIS TO CLINTON, IOWA	SHEET 4
	LAST LEVEL MOD. THIS TYP.	DB		CHK: JJL	C.T.C. CIRCUITS	DWG 23.76
	LAST LEVEL BY DESIGNER.	DQ		A.F.E. 89952	Office of Sr AVP Engineering - Signal/TCO Omaha, Nebraska	GEN
	CHANGED FROM TYP.? Y/N	Y		ID= GEN2376.4X		

(REV. 01.02.21) (HX32TKUG.5)

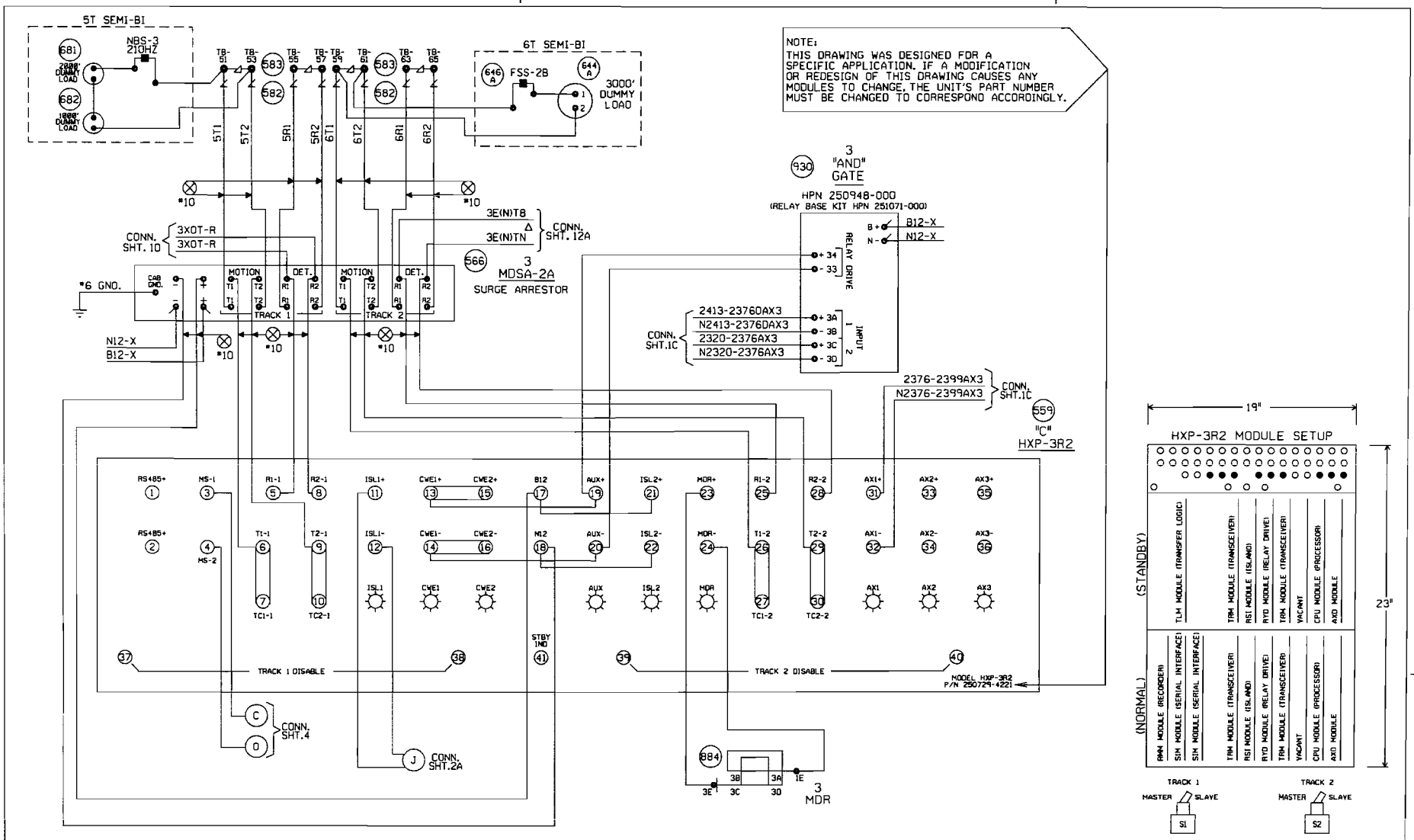

NOTE:
THIS DRAWING WAS DESIGNED FOR A SPECIFIC APPLICATION. IF A MODIFICATION OR REDESIGN OF THIS DRAWING CAUSES ANY MODULES TO CHANGE, THE UNIT'S PART NUMBER MUST BE CHANGED TO CORRESPOND ACCORDINGLY.

Δ FIELD ENSURE PROPER TRACK POLARITY AND 'AC' ACCORDINGLY

NEW SHEET
WHEATON, ILLINOIS
COLLEGE AVENUE
M.P. 23.76
GENEVA SUBDIVISION
D.O.T.#174 952N

1 06-16-08 INSTALL HALF BLOCK SYSTEM FROM COLLEGE AVE. TO LOMBARD, ILL. PHASE 2 PART 2. (MP. 23.76 TO MP. 20.41) AFE #89952 JJL /CTC/MDF	MODIFICATION LEVEL		UNION PACIFIC QUALITY PRODUCTIVITY SAFETY SIGNAL DESIGN	DES: CTC	UNION PACIFIC RAILROAD	DATE 06-16-08
	Q.A. LAST LEVEL CHK'D.	DD		DIG: CTC	CHICAGO, ILLINOIS TO CLINTON, IOWA C.T.C. CIRCUITS	SHEET 5
	LAST LEVEL MOD. THIS TYP.	DB		CHK: JJL		DWG 23.76
	LAST LEVEL BY DESIGNER.	DQ		A.F.E. 89952		GEN
	CHANGED FROM TYP.2 Y/N	Y		ID: GEN2376.5X	Office of Sr. AVP Engineering - Signal/TCO Omaha, Nebraska	

(REV. 01.02.21) (HX31TKBG.DGN)

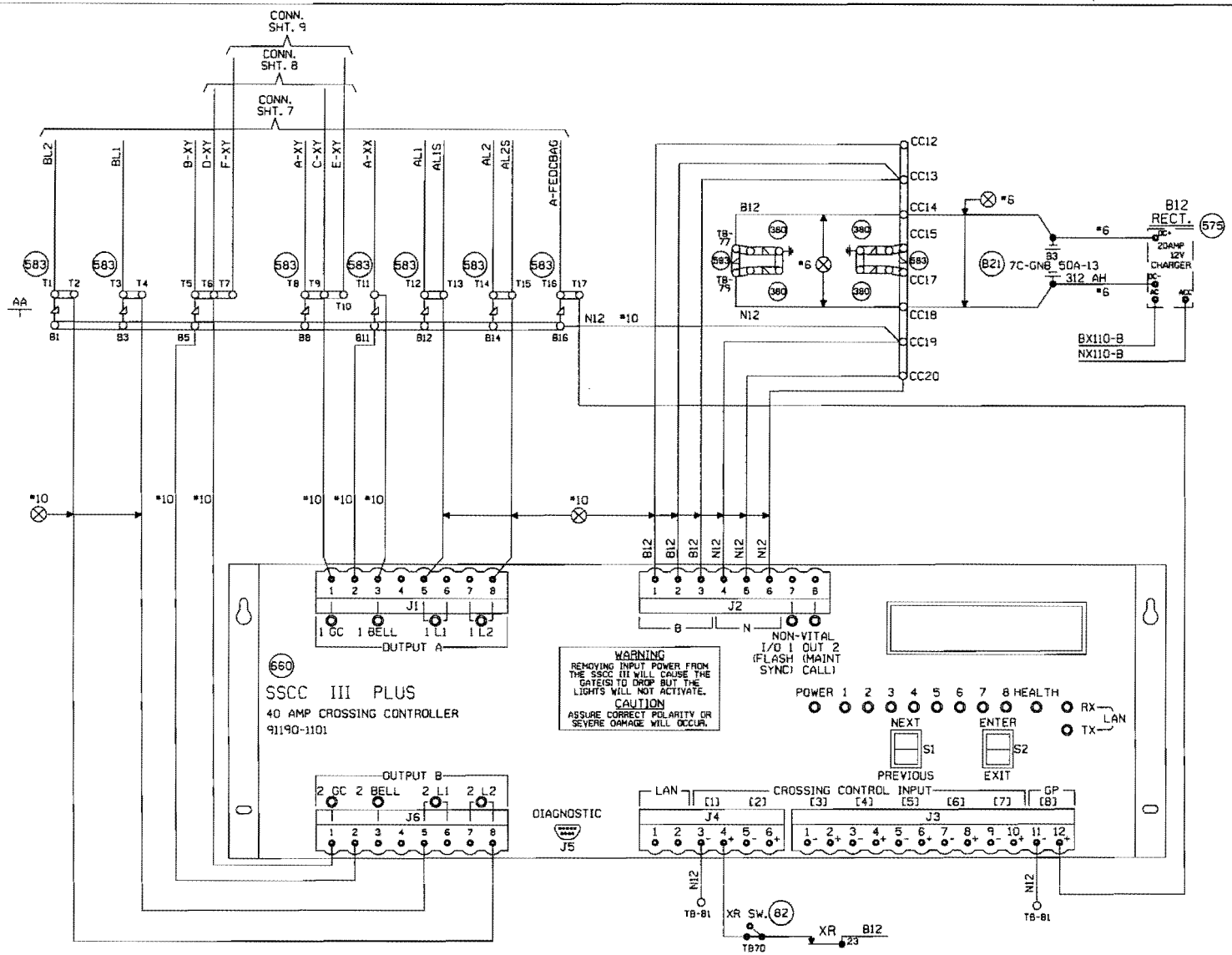

IMPORTANT

THE PROGRAM MCF AND ID LISTED BELOW MUST BE ENTERED IN THE PROGRAM SETUP ROUTINE FOR THIS SOLID STATE CROSSING CONTROLLER TO FUNCTION PROPERLY.

PROGRAM MCF: BASICPLS

PROGRAM ID: 087

EXTERNAL CROSSING CONTROLLER PROGRAM NOTE:

*1) PROGRAM INPUT 2-7 TO DISABLED

NEW SHEET
WHEATON, ILLINOIS
COLLEGE AVENUE
M.P. 23.76
GENEVA SUBDIVISION
D.O.T.#174 952N

1	06-16-08	INSTALL HALF BLOCK SYSTEM FROM COLLEGE AVE. TO LOMBARD, ILL. PHASE 2 PART 2. (MP. 23.76 TO MP. 20.41) AFE #89952	JJL /CTC/MCF

MODIFICATION LEVEL	
O. A. LAST LEVEL CHECKED	00
LAST LEVEL MOD THIS TYPICAL	00
LAST LEVEL BY DESIGNER	00
CHANGED FROM TYPICAL?	Y

rev 02.01.00 4K ACDCSSCC.5

UNION PACIFIC
SIGNAL DESIGN

DES:	CTC
DIG:	CTC
CHK:	JJL
A.F.E.	89952
ID:	GEN2376.6X

UNION PACIFIC RAILROAD

CHICAGO, ILLINOIS TO
CLINTON, IOWA
C.T.C. CIRCUITS

Office of Sr. VP Engineering - Signal/TCO Omaha, Nebraska

DATE	06-16-08
SHEET	6
DWG	23.76
	GEN

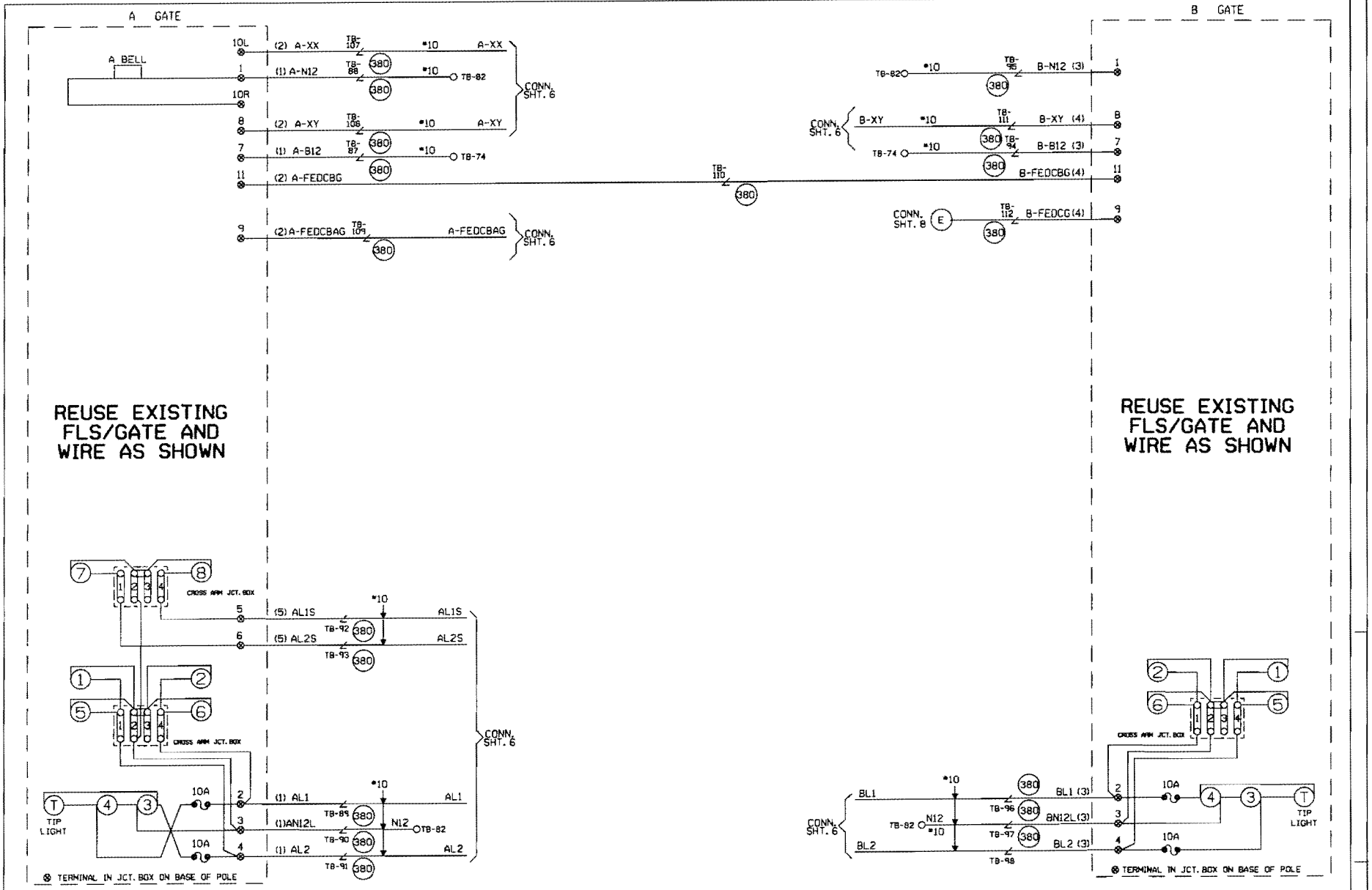

CABLE TABULATION

CABLE NO. 1 5C. NO.6 U.G.B.T.
CABLE NO. 2 7C. NO.14 U.G.B.T.
CABLE NO. 3 5C. NO.6 U.G.B.T.
CABLE NO. 4 7C. NO.14 U.G.B.T.
CABLE NO. 5 2C. NO.6 U.G.B.T.

NEW SHEET
WHEATON, ILLINOIS
COLLEGE AVENUE
M.P. 23.76
GENEVA SUBDIVISION
D.O.T.#174 952N

1	06-16-08	INSTALL HALF BLOCK SYSTEM FROM COLLEGE AVE. TO LOMBARD, ILL. PHASE 2 PART 2. (MP. 23.76 TO MP. 20.41) AFE #89952	JJL / /CTC/MOF

MODIFICATION LEVEL	
D. A. LAST LEVEL CHECKED	DO
LAST LEVEL MOD THIS TYPICAL	DO
LAST LEVEL BY DESIGNER	DO
CHANGED FROM TYPICAL?	Y

UNION PACIFIC SIGNAL DESIGN

DES: CTC
DIG: CTC
CHK: JJL
A.F.E. 89952
ID: GEN2376.7X

UNION PACIFIC RAILROAD
CHICAGO, ILLINOIS TO CLINTON, IOWA
C.T.C. CIRCUITS
Office of Sr. AVP Engineering - Signal/TCO Omaha, Nebraska

DATE 06-16-08
SHEET 7
DWG 23.76
GEN

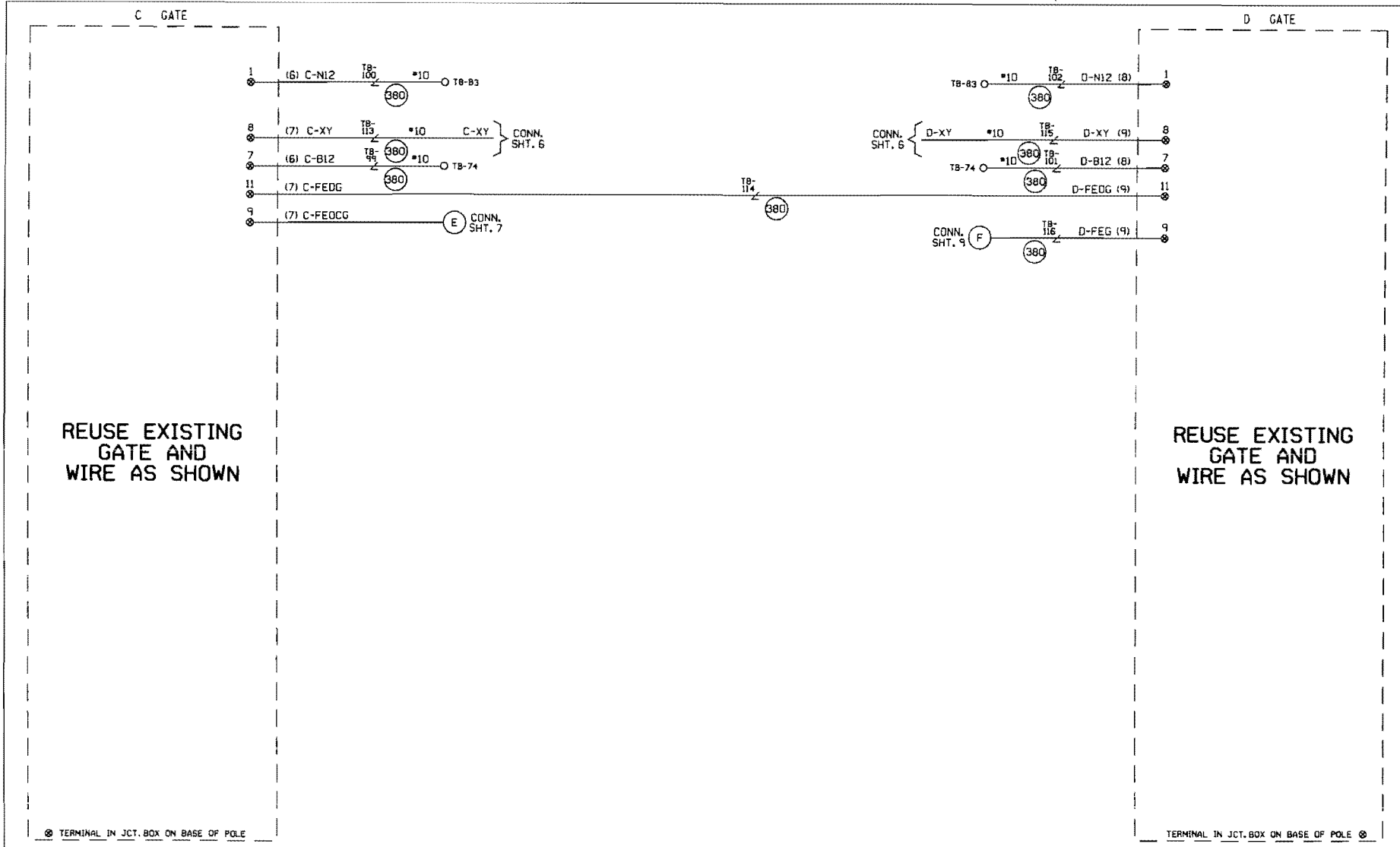

CABLE TABULATION

CABLE NO. 6 5C. NO.6 U.G.B.T.
CABLE NO. 7 7C. NO.14 U.G.B.T.
CABLE NO. 8 5C. NO.6 U.G.B.T.
CABLE NO. 9 7C. NO.14 U.G.B.T.

NEW SHEET

WHEATON, ILLINOIS
COLLEGE AVENUE
M.P. 23.76
GENEVA SUBDIVISION
O.O.T.#174 952N

I 06-16-08 INSTALL HALF BLOCK SYSTEM FROM COLLEGE AVE. TO LOMBARD, ILL. PHASE 2 PART 2. (MP. 23.76 TO MP. 20.41) AFE #89952 JJL /CTC/MOF	MODIFICATION LEVEL		UNION PACIFIC SAFETY QUALITY PRODUCTIVITY SIGNAL DESIGN	DES: CTC	UNION PACIFIC RAILROAD	DATE 06-16-08
	D.A. LAST LEVEL CHECKED	DQ		DIG: CTC	CHICAGO, ILLINOIS TO CLINTON, IOWA C.T.C. CIRCUITS	SHEET 8
	LAST LEVEL MOD THIS TYPICAL	DQ		CHK: JJL		DWG 23.76
	LAST LEVEL BY DESIGNER	DQ		A.F.E. 89952		GEN
	CHANGED FROM TYPICAL?	Y		ID= GEN2376.8X	Office of Sr AVP Engineering - Signal/TCO Omaha, Nebraska	

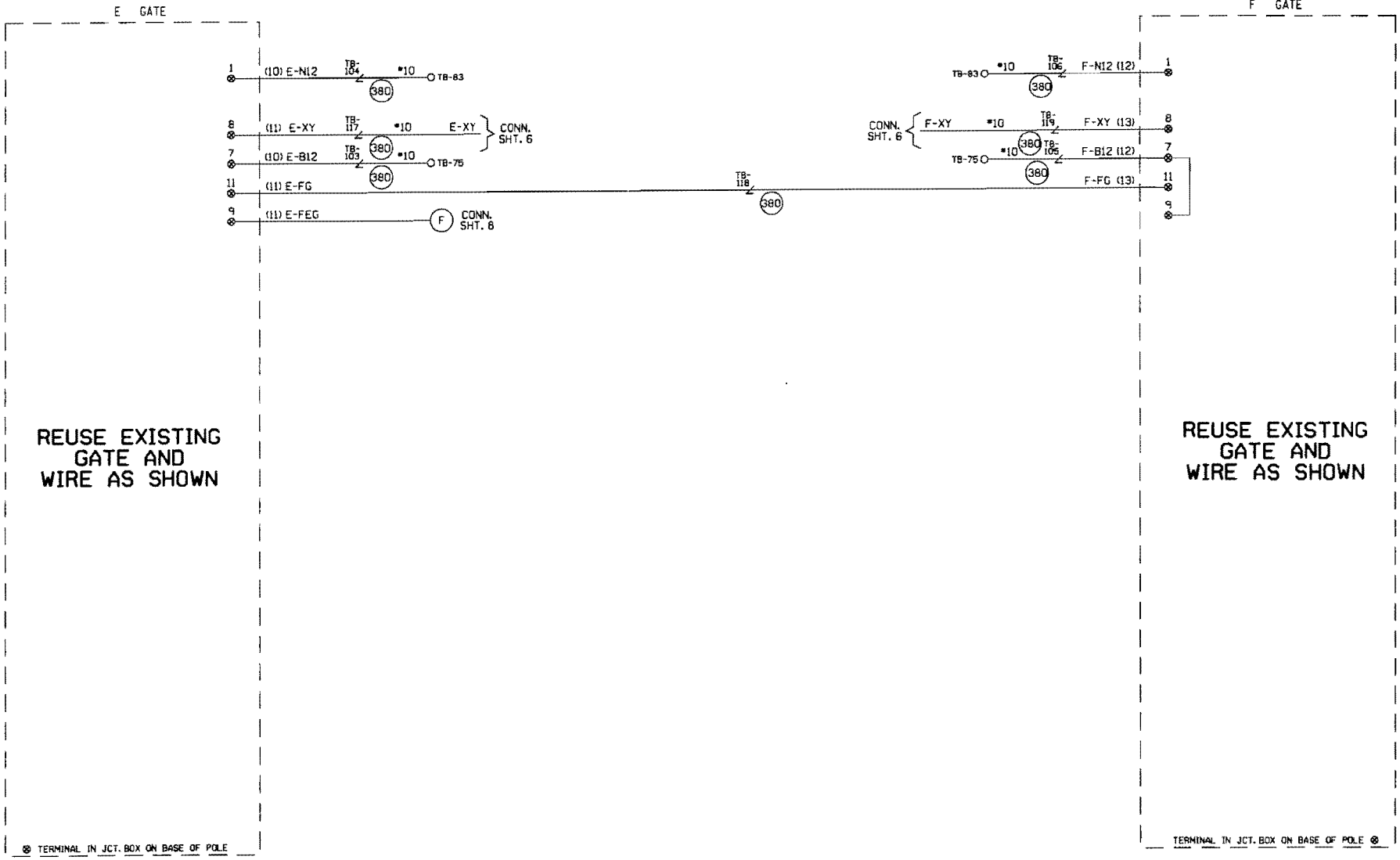

CABLE TABULATION

CABLE NO.10 5C. NO.6 U.G.B.T.
CABLE NO.11 7C. NO.14 U.G.B.T.
CABLE NO.12 5C. NO.6 U.G.B.T.
CABLE NO.13 7C. NO.14 U.G.B.T.

NEW SHEET

WHEATON, ILLINOIS
COLLEGE AVENUE
M.P. 23.76
GENEVA SUBDIVISION
O.O.T.#174 952N

					1 06-16-08 INSTALL HALF BLOCK SYSTEM FROM COLLEGE AVE. TO LOMBARD, ILL. PHASE 2 PART 2. MP. 23.76 TO MP. 20.41 AFE #89952 J.B. / /CTC/MOF	MODIFICATION LEVEL		UNION PACIFIC SIGNAL DESIGN	DES: CTC	UNION PACIFIC RAILROAD	DATE 06-16-08
						O. A. LAST LEVEL CHECKED	DO		DIG: CTC	CHICAGO, ILLINOIS TO CLINTON, IOWA C.T.C. CIRCUITS	SHEET 9
						LAST LEVEL MOD THIS TYPICAL	DO		CHK: JJL		DWG 23.76
						LAST LEVEL BY DESIGNER	DO		A.F.E. 89952		GEN
						CHANGED FROM TYPICAL?	Y		ID: GEN2376.9X	Office of Sr. AVP Engineering - Signal/TCO Omaha, Nebraska	

SAFETRAN PRODUCTS MODEL "S-40" MECHANISM

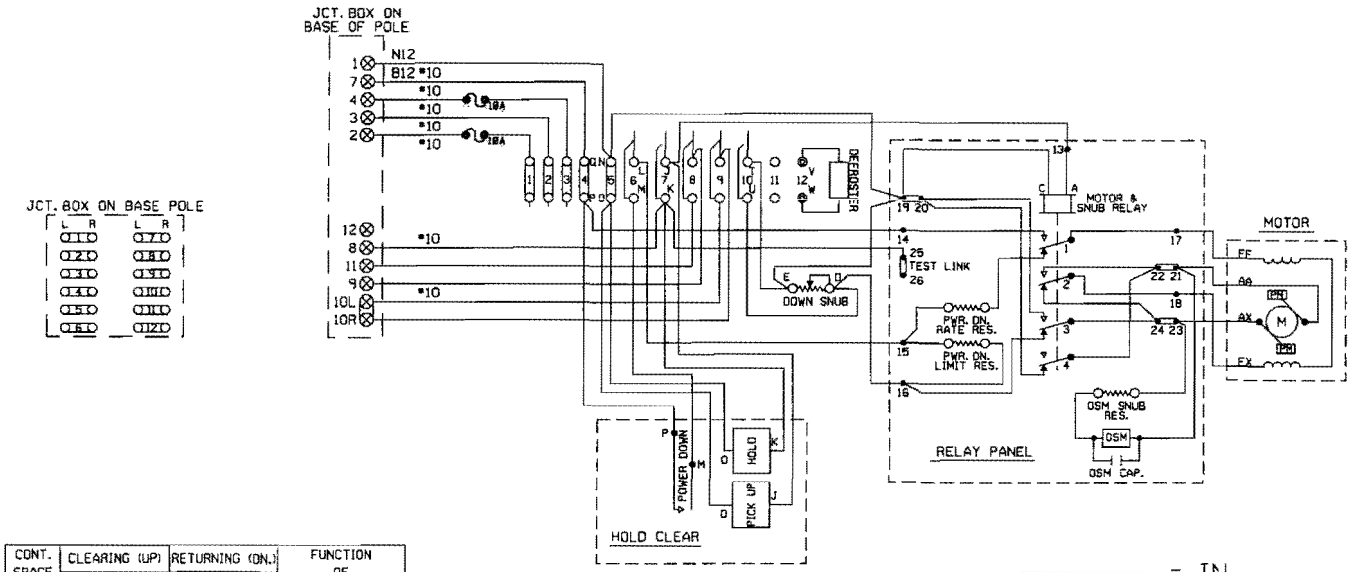

CONT. SPACE NO.	CLEARING (UP)		RETURNING (DN.)		FUNCTION OF CONTACT
	CLOSES	OPENS	CLOSES	OPENS	
6	45°	—	—	45°	POWER DOWN
7	—	89°	89°	—	POWER UP
8	83°	—	—	83°	FLASHING LIGHT (SPARE)
9	5°	—	—	5°	BELL (SPARE)
10	—	5°	5°	—	HORIZONTAL SNUB

MECHANISM SHOWN IN CLEAR POSITION.

——— = IN

CTC/CJB
06-16-08

INSTALLED

FIELD PLEASE
VERIFY GATE MECH.
WIRING AND AC
PLAN ACCORDINGLY.

FOR WIRING GATE "A" & "B"

REDRAWN
WHEATON, ILLINOIS
COLLEGE AVENUE
M.P. 23.76
GENEVA SUBDIVISION
D.O.T.#174 952N

1 06-16-08 INSTALL HALF BLOCK SYSTEM FROM COLLEGE AVE. TO LOMBARD, ILL. PHASE 2 PART 2. (MP. 23.76 TO MP. 20.41) AFE #89952 J.JL. / /CTC/MDF	UNION PACIFIC SAFETY QUALITY PRODUCTIVITY SIGNAL DESIGN	DES: CTC DIG: CTC CHK: JJL A.F.E. 89952 ID= GEN2376.10X	UNION PACIFIC RAILROAD CHICAGO, ILLINOIS TO CLINTON, IOWA C.T.C. CIRCUITS Office of Sr. AVP Engineering - Signal/TCO Omaha, Nebraska	DATE 06-16-08 SHEET 10 DWG 23.76 GEN		

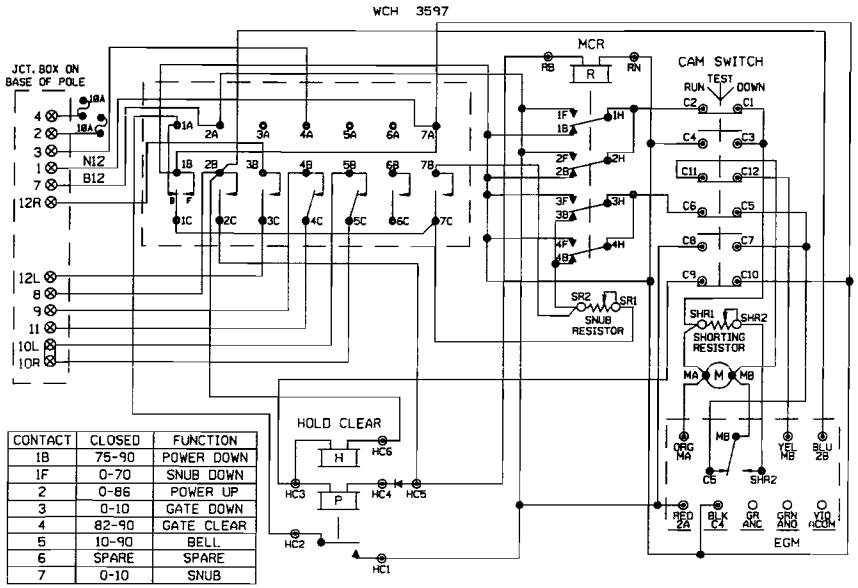

CONTACT	CLOSED	FUNCTION
1B	75-90	POWER DOWN
1F	0-70	SNUB DOWN
2	0-86	POWER UP
3	0-10	GATE DOWN
4	82-90	GATE CLEAR
5	10-90	BELL
6	SPARE	SPARE
7	0-10	SNUB

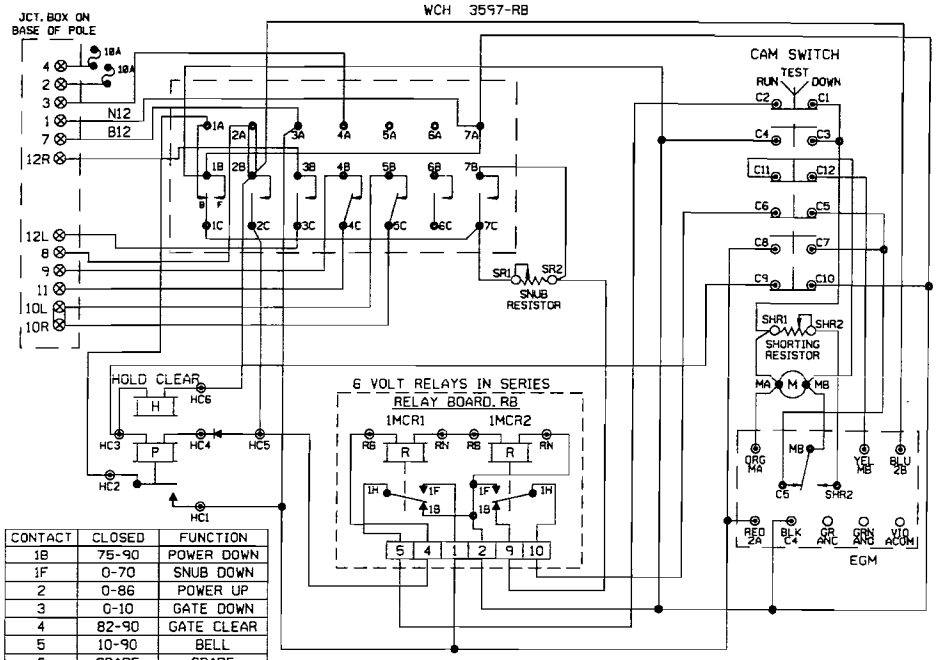

CONTACT	CLOSED	FUNCTION
1B	75-90	POWER DOWN
1F	0-70	SNUB DOWN
2	0-86	POWER UP
3	0-10	GATE DOWN
4	82-90	GATE CLEAR
5	10-90	BELL
6	SPARE	SPARE
7	0-10	SNUB

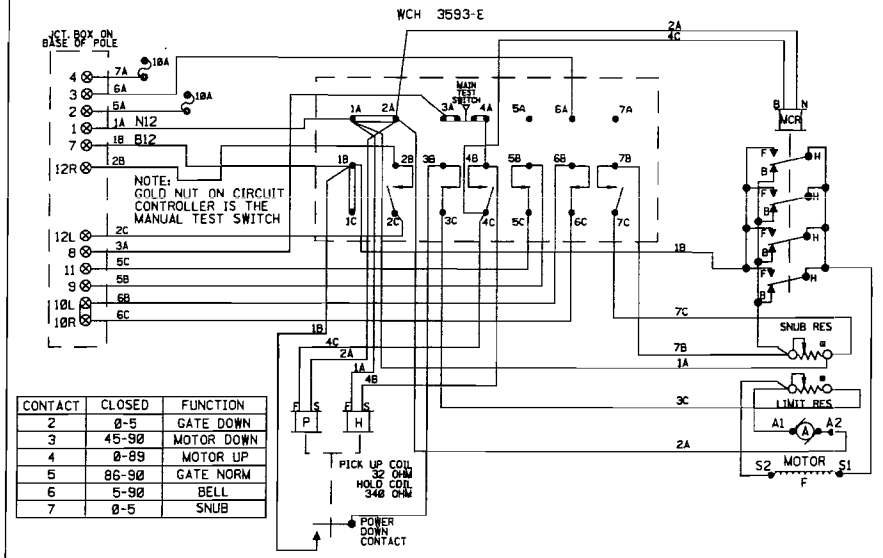

CONTACT	CLOSED	FUNCTION
2	0-5	GATE DOWN
3	45-90	MOTOR DOWN
4	0-89	MOTOR UP
5	86-90	GATE NORM
6	5-90	BELL
7	0-5	SNUB

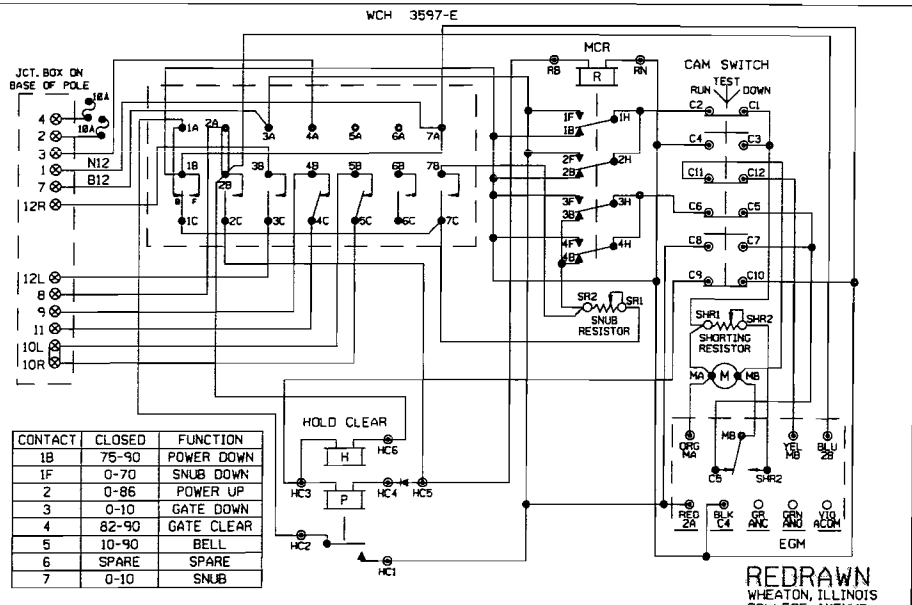

CONTACT	CLOSED	FUNCTION
1B	75-90	POWER DOWN
1F	0-70	SNUB DOWN
2	0-86	POWER UP
3	0-10	GATE DOWN
4	82-90	GATE CLEAR
5	10-90	BELL
6	SPARE	SPARE
7	0-10	SNUB

SHOW TYPE MECH. INSTALLED

ALL MECHANISM SHOWN IN CLEAR POSITION

TYPICAL JCT. BOX BASE ON POLE

REDRAWN
WHEATON, ILLINOIS
COLLEGE AVENUE
M.P. 23.76
GENEVA SUBDIVISION
D.O.T.#174 952N

FOR WIRING GATES "C", "D", "E" & "F"

1	06-16-08 INSTALL HALF BLOCK SYSTEM FROM COLLEGE AVE. TO LOMBARD, ILL. PHASE 2 PART 2. MP. 23.76 TO MP. 20.41 AFE #89952 JJL /CTC/MCF

MODIFICATION LEVEL	
D.A. LAST LEVEL CHECKED	DQ
LAST LEVEL MOD THIS TYPICAL	DQ
LAST LEVEL BY DESIGNER	DQ
CHANGED FROM TYPICAL?	Y

UNION PACIFIC — QUALITY PRODUCTIVITY SAFETY — SIGNAL DESIGN

DES: CTC
DIG: CTC
CHK: JJL
A.F.E. 89952
ID: GEN2376.11X

UNION PACIFIC RAILROAD
CHICAGO, ILLINOIS TO
CLINTON, IOWA
C.T.C. CIRCUITS
Office of Sr AVP Engineering - Signal/TCO Omaha, Nebraska

DATE 06-16-08
SHEET 11
DWG 23.76
GEN

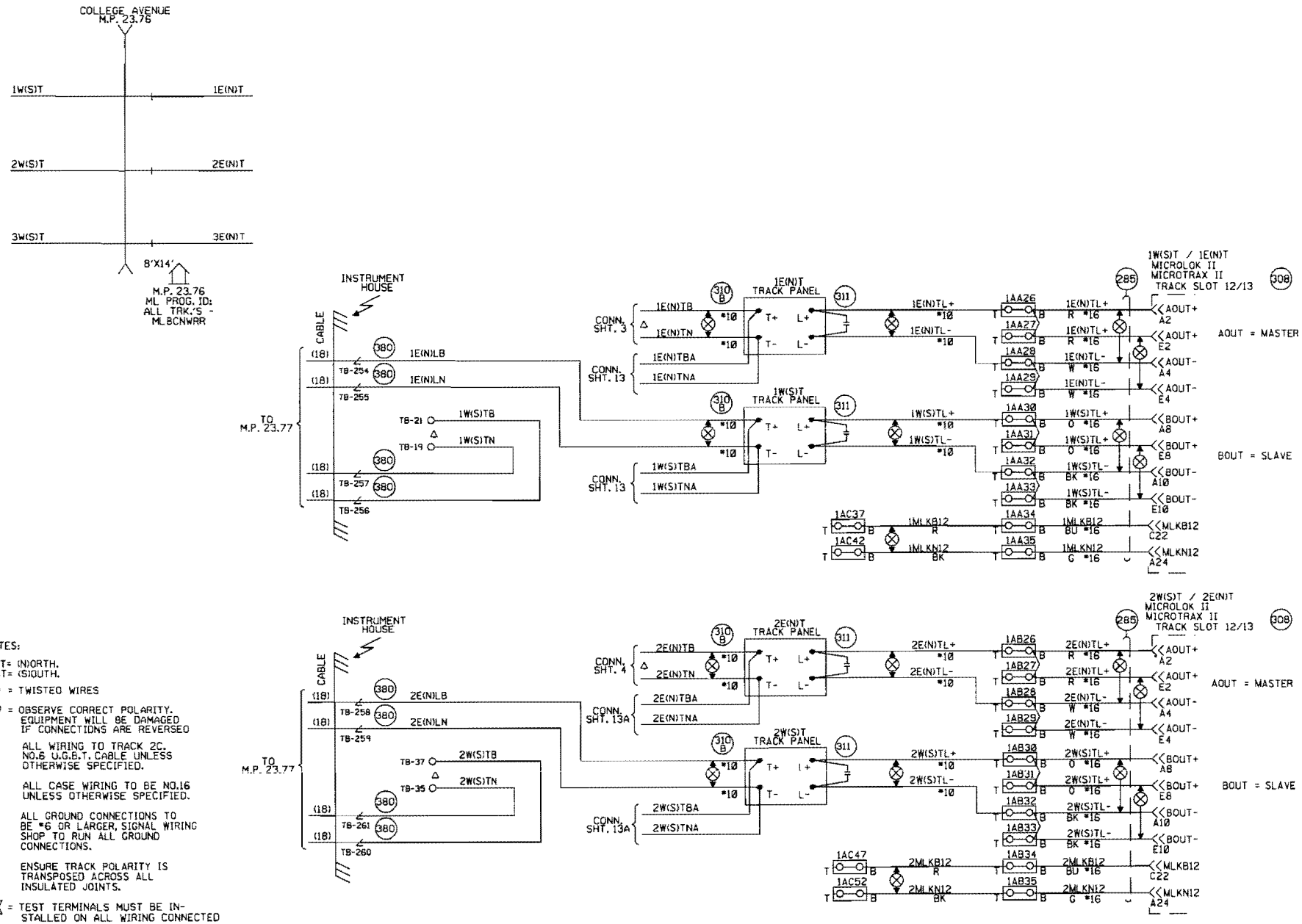

NOTES:

EAST= (N)ORTH.
WEST= (S)OUTH.

⊗ = TWISTED WIRES

⊘ = OBSERVE CORRECT POLARITY. EQUIPMENT WILL BE DAMAGED IF CONNECTIONS ARE REVERSED

ALL WIRING TO TRACK 2C. NO.6 U.G.B.T. CABLE UNLESS OTHERWISE SPECIFIED.

ALL CASE WIRING TO BE NO.16 UNLESS OTHERWISE SPECIFIED.

ALL GROUND CONNECTIONS TO BE #6 OR LARGER, SIGNAL WIRING SHOP TO RUN ALL GROUND CONNECTIONS.

ENSURE TRACK POLARITY IS TRANSPOSED ACROSS ALL INSULATED JOINTS.

⧖ = TEST TERMINALS MUST BE INSTALLED ON ALL WIRING CONNECTED TO EXTERNAL CABLES (EXCEPT TRACK AND A.C. POWER WIRES).

△ FIELD ENSURE PROPER TRACK POLARITY AND "AC" ACCORDINGLY

NEW SHEET
GENEVA SUBDIVISION
REGENERATIVE REPEATER
M.P. 23.76
8'X14' HOUSE

					1 06-16-08 INSTALL HALF BLOCK SYSTEM FROM COLLEGE AVE. TO LOMBARD ILL. PHASE 2 PART 2. (MP: 23.76 TO MP. 20.41) AFE #89952 JJL /CTC/NOF	MODIFICATION LEVEL		UNION PACIFIC SAFETY QUALITY PRODUCTIVITY SIGNAL DESIGN	DES: CTC	UNION PACIFIC RAILROAD	DATE 06-16-08
						D.A. LAST LEVEL CHECKED	DO		DIG: CTC	CHICAGO, ILLINOIS TO CLINTON, IOWA	SHEET 12
						LAST LEVEL MOD THIS TYPICAL	DO		CHK: JJL	C.T.C. CIRCUITS	DWG 23.76
						LAST LEVEL BY DESIGNER	DO		A.F.E. 89952	Office of Sr. AVP Engineering - Signal/TCO Omaha, Nebraska	GEN
						CHANGED FROM TYPICAL?	Y		ID: GEN2376.12S		

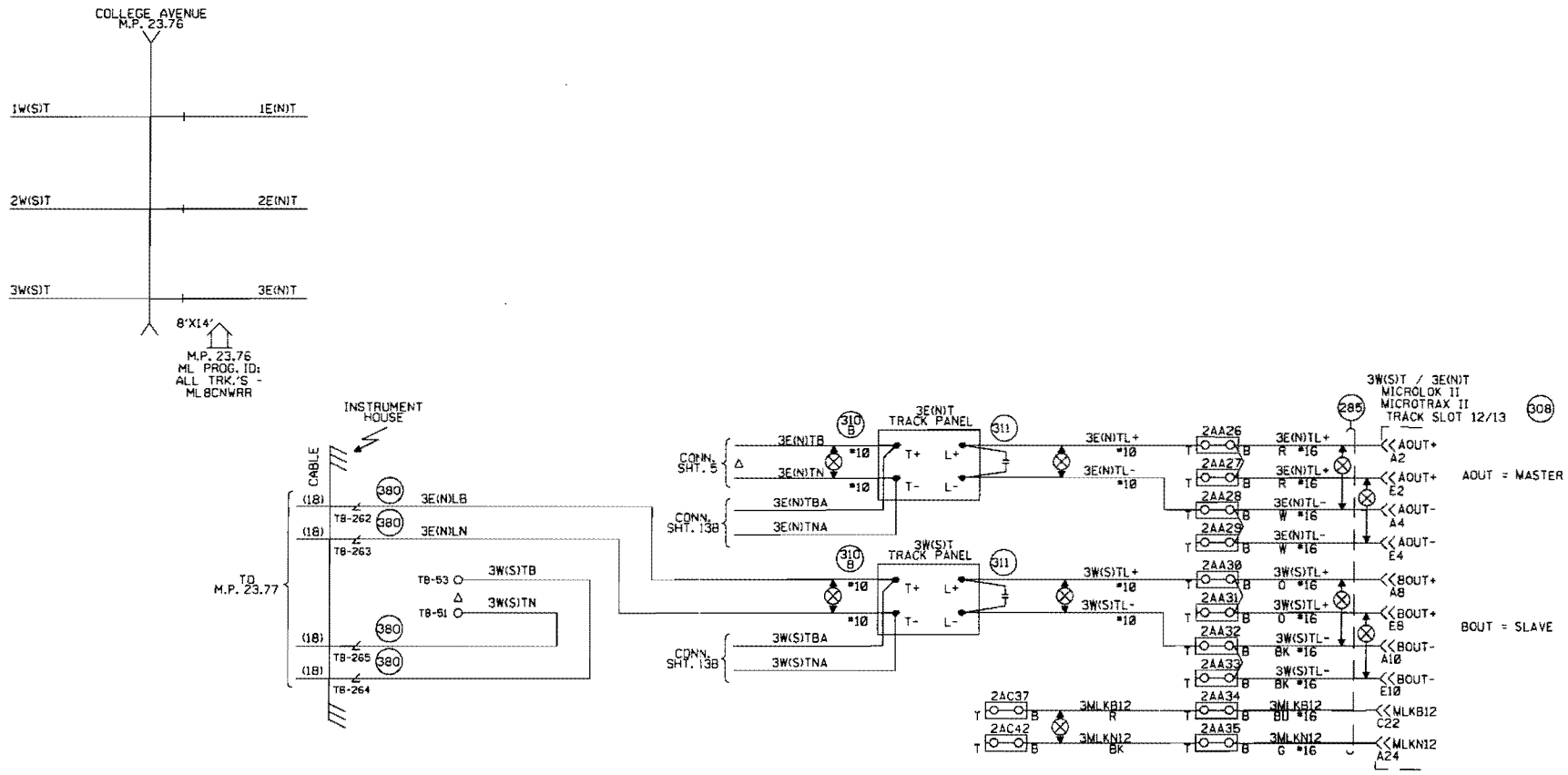

Δ FIELD ENSURE PROPER TRACK POLARITY AND "AC" ACCORDINGLY

NEW SHEET
GENEVA SUBDIVISION
REGENERATIVE REPEATER
M.P. 23.76
8'X14' HOUSE

					1 06-16-08 INSTALL HALF BLOCK SYSTEM FROM COLLEGE AVE. TO LONGMEAD ILL. PHASE 2 PART 2. MP. 23.76 TO MP. 20.413 AFE #89952 JJL / CTC/MOF	MODIFICATION LEVEL		UNION PACIFIC SAFETY QUALITY PRODUCTIVITY SIGNAL DESIGN	DES: CTC DIG: CTC CHK: JJL A.F.E. 89952 ID: GEN2376.12AS	UNION PACIFIC RAILROAD CHICAGO, ILLINOIS TO CLINTON, IOWA C.T.C. CIRCUITS Office of Sr. AVP Engineering - Signal/TCO Omaha, Nebraska	DATE 06-16-08 SHEET 12A DWG 23.76 GEN
						D.A. LAST LEVEL CHECKED	DQ				
						LAST LEVEL MOD THIS TYPICAL	DQ				
						LAST LEVEL BY DESIGNER	DQ				
						CHANGED FROM TYPICAL?	Y				

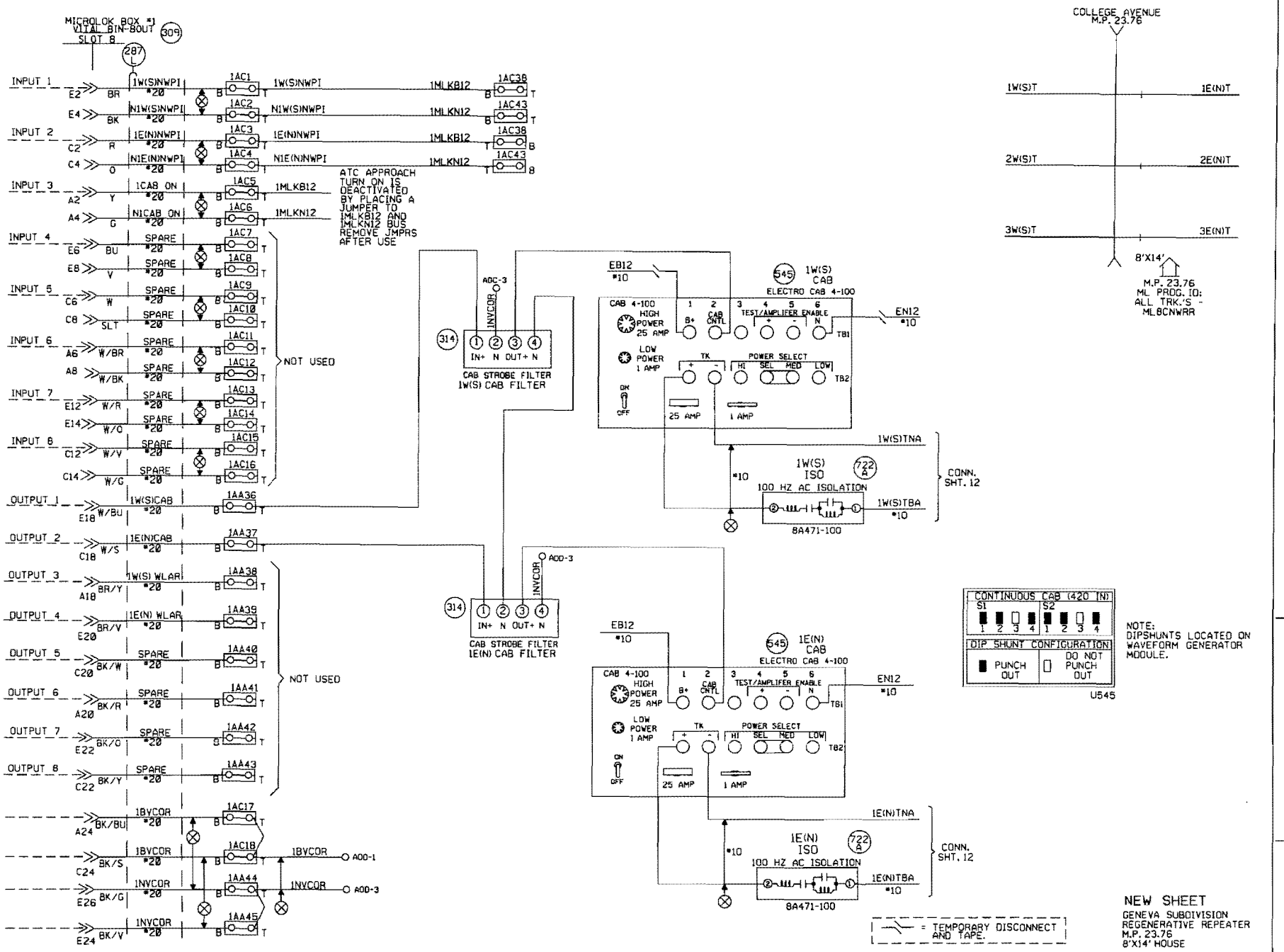

1 06-16-08 INSTALL HALF BLOCK SYSTEM FROM COLLEGE AVE. TO LOMBARD, ILL. PHASE 2 PART 2. (MP. 23.76 TO MP. 20.41) AFE #89952 JJL /CTC/MOF	MODIFICATION LEVEL		UNION PACIFIC	DES: CTC	UNION PACIFIC RAILROAD
	D.A. LAST LEVEL CHECKED	00		DIG: CTC	CHICAGO, ILLINOIS TO CLINTON, IOWA C.T.C. CIRCUITS
	LAST LEVEL MOD THIS TYPICAL	00		CHK: JJL	
	LAST LEVEL BY DESIGNER	00		A.F.E. 89952	
	CHANGED FROM TYPICAL?	Y	SIGNAL DESIGN	ID= GEN2376.135	Office of Sr AVP Engineering - Signal/TCO Omaha, Nebraska

DATE 06-16-08	
SHEET 13	
DWG 23.76	
GEN	

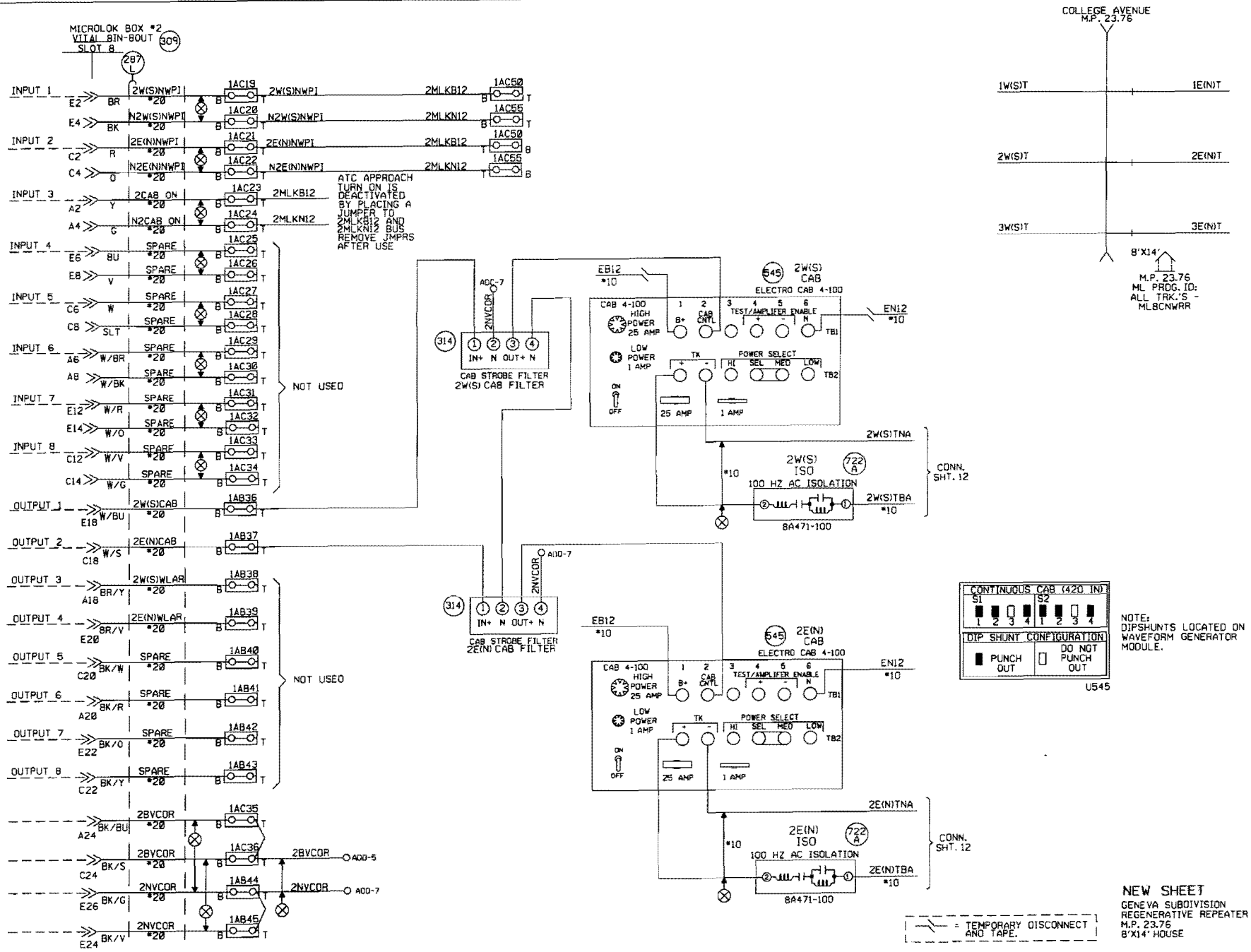

1	06-16-08	INSTALL HALF BLOCK SYSTEM FROM COLLEGE AVE. TO LOMBARD B.L. PHASE 2 PART 2. (MP. 23.76 TO MP. 20.41) AFE #89952	J.J. /CTC/NOF

MODIFICATION LEVEL	
Q. A. LAST LEVEL CHECKED	00
LAST LEVEL MOD THIS TYPICAL	00
LAST LEVEL BY DESIGNER	00
CHANGED FROM TYPICAL?	Y

UNION PACIFIC — SAFETY QUALITY PRODUCTIVITY — SIGNAL DESIGN

DES: CTC
DIG: CTC
CHK: JJL
A.F.E. 89952
ID: GEN2376.13AS

UNION PACIFIC RAILROAD

CHICAGO, ILLINOIS TO CLINTON, IOWA
C.T.C. CIRCUITS

Office of Sr. AVP Engineering - Signal/TCO Omaha, Nebraska

DATE 06-16-08
SHEET 13A
DWG 23.76
GEN

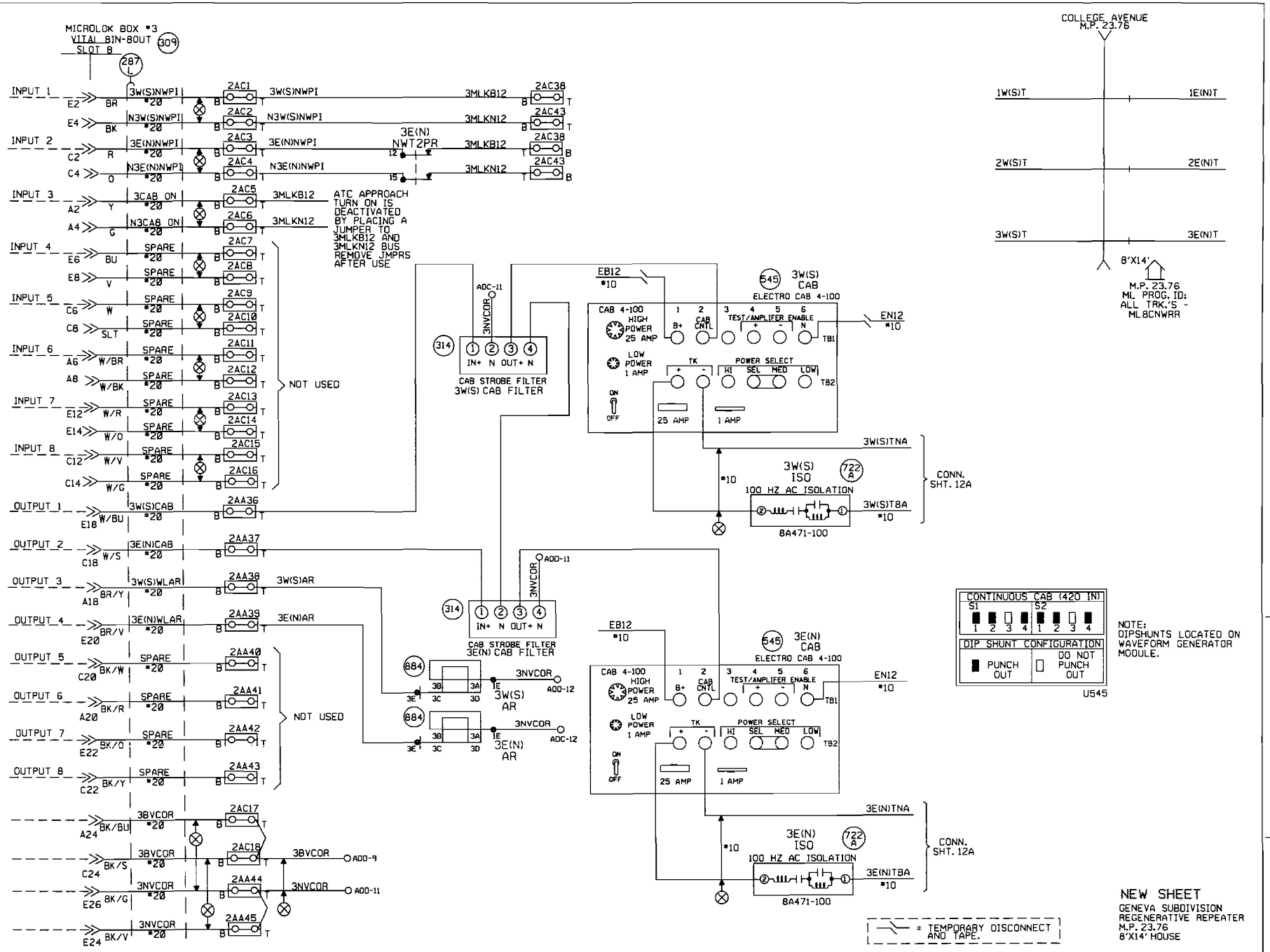

1 06-16-08 INSTALL HALF BLOCK SYSTEM FROM COLLEGE AVE. TO LOMBARD, ILL. PHASE 2 PART 2. (MP. 23.76 TO MP. 20.41) AFE #89952 JJL /CTC/MOF	MODIFICATION LEVEL		UNION PACIFIC	DES: CTC	UNION PACIFIC RAILROAD	DATE 06-16-08
	O.A. LAST LEVEL CHECKED	00		DIG: CTC	CHICAGO, ILLINOIS TO	SHEET 138
	LAST LEVEL MOD THIS TYPICAL	00		CHK: JJL	CLINTON, IOWA	DWG 23.76
	LAST LEVEL BY DESIGNER	00		A.F.E. 89952	C.T.C. CIRCUITS	GEN
	CHANGED FROM TYPICAL?	Y	SIGNAL DESIGN	ID: GEN2376.138S	Office of Sr AVP Engineering - Signal/TCO Omaha, Nebraska	
	REV 02/01/88 2TMLINTC.38CN					

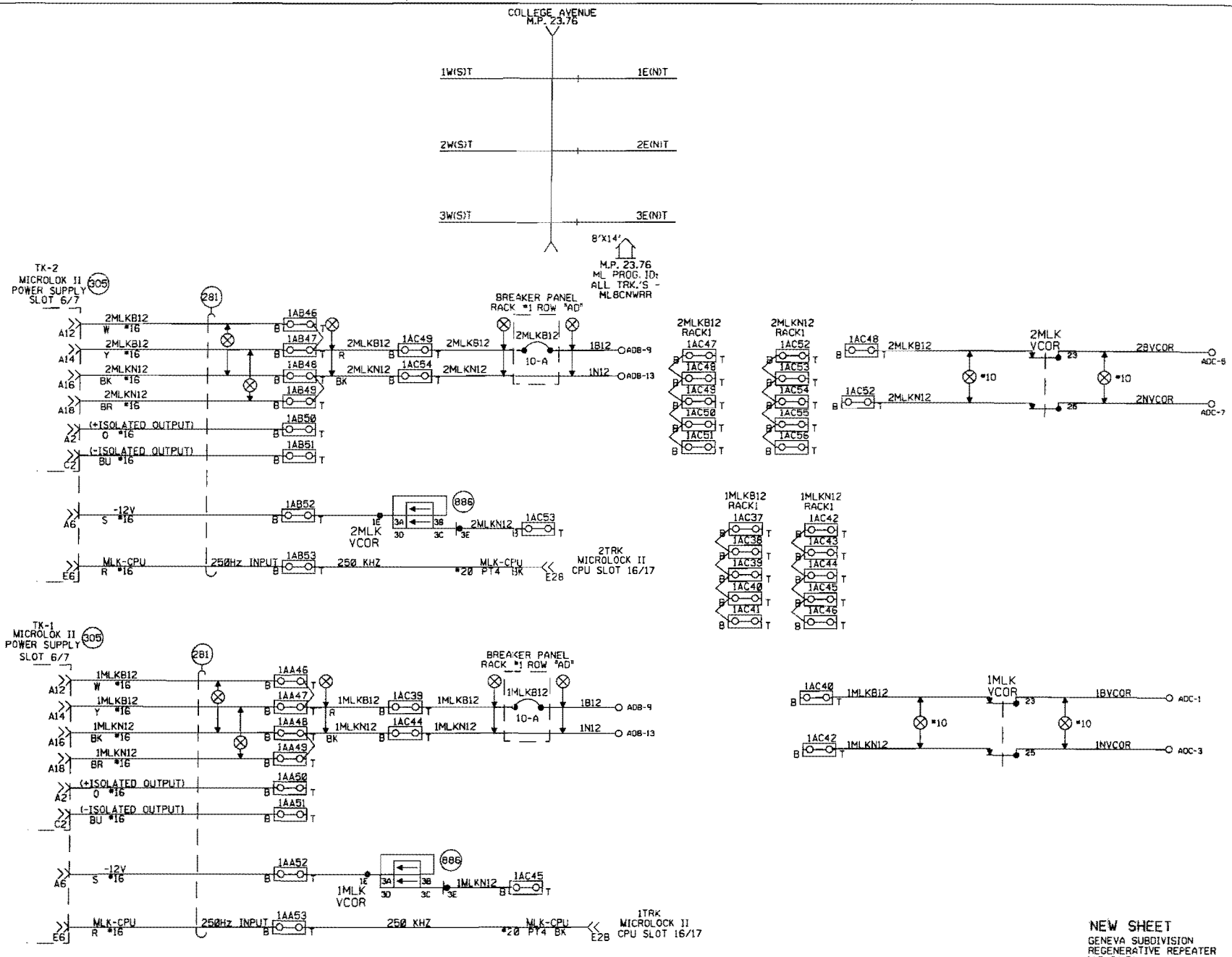

NEW SHEET
GENEVA SUBDIVISION
REGENERATIVE REPEATER
M.P. 23.76
8'X14' HOUSE

					1 06-16-08 INSTALL HALF BLOCK SYSTEM FROM COLLEGE AVE. TO LOMBARD ILL. PHASE 2 PART 2. (MP. 23.76 TO MP. 20.41) AFE #89952 J.S. /CTC/MOF	MODIFICATION LEVEL		UNION PACIFIC	DES: CTC	UNION PACIFIC RAILROAD	DATE 06-16-08
						D. A. LAST LEVEL CHECKED	DG	QUALITY PRODUCTIVITY SAFETY	DIG: CTC	CHICAGO, ILLINOIS TO	SHEET 14
						LAST LEVEL MOD THIS TYPICAL	DG		CHK: JJL	CLINTON, IOWA	DWG 23.76
						LAST LEVEL BY DESIGNER	DG		A.F.E. 89952	C.T.C. CIRCUITS	GEN
						CHANGED FROM TYPICAL?	Y	SIGNAL DESIGN	ID: GEN2376.J4S	Office of Sr. AVP Engineering - Signal/TCO Omaha, Nebraska	

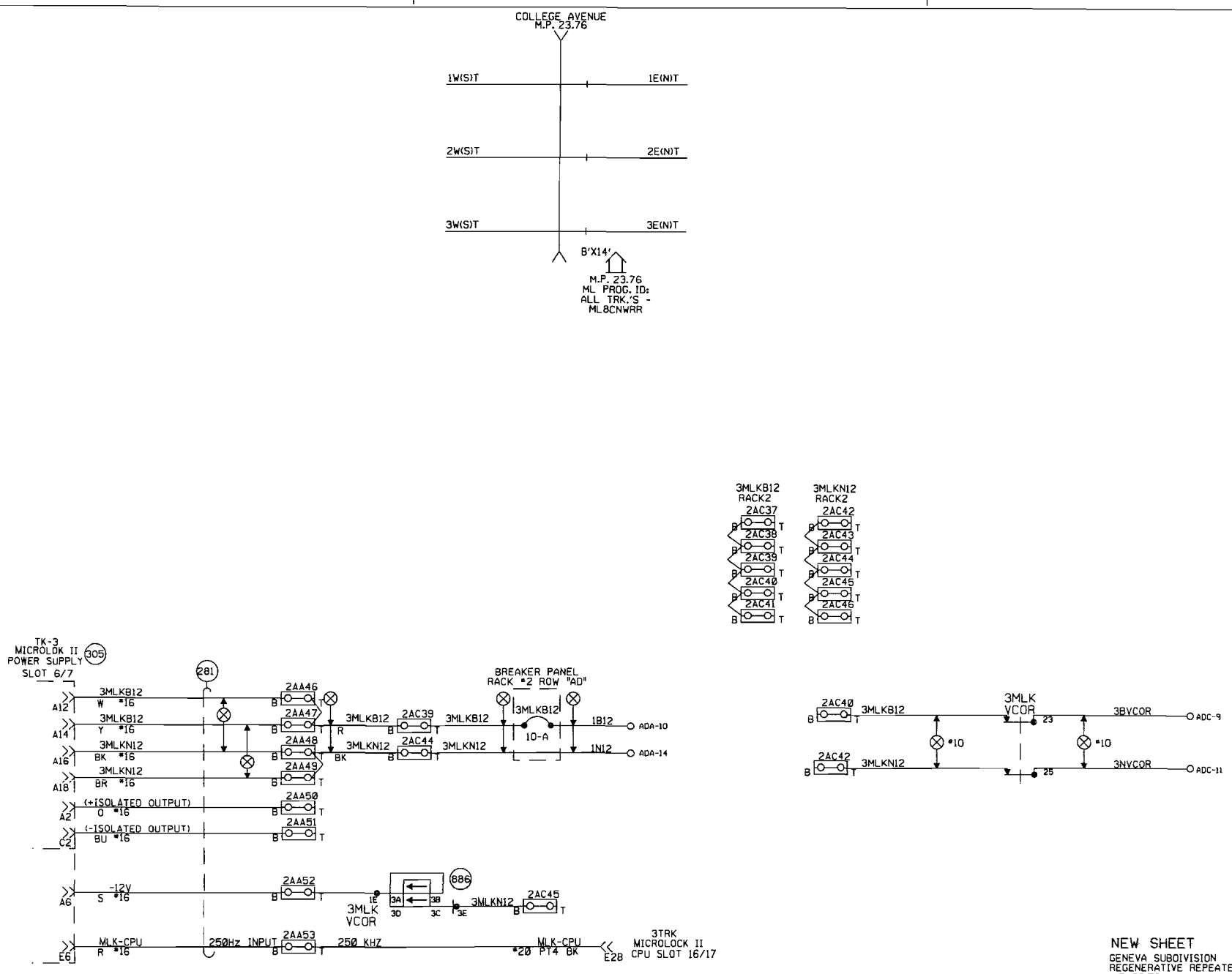

NEW SHEET
GENEVA SUBDIVISION
REGENERATIVE REPEATER
M.P. 23.76
8'X14' HOUSE

1 06-16-08 INSTALL HALF BLOCK SYSTEM FROM COLLEGE AVE. TO LOMBARD, ILL. PHASE 2 PART 2. MP. 23.76 TO MP. 20.411 AFE #89952. JJL /CTC/MOF	MODIFICATION LEVEL		UNION PACIFIC	DES: CTC	UNION PACIFIC RAILROAD	DATE 06-16-08
	D.A. LAST LEVEL CHECKED	DQ		DIG: CTC	CHICAGO, ILLINOIS TO CLINTON, IOWA C.T.C. CIRCUITS	SHEET 14A
	LAST LEVEL MOD THIS TYPICAL	DQ		CHK: JJL		DWG 23.76
	LAST LEVEL BY DESIGNER	DD		A.F.E. 89952		GEN
	CHANGED FROM TYPICAL?	Y	SIGNAL DESIGN	ID: GEN2376.14AS	Office of Sr AVP Engineering - Signal/TCO Omaha, Nebraska	
	rev 02/01/88 2TMLINTC.4					

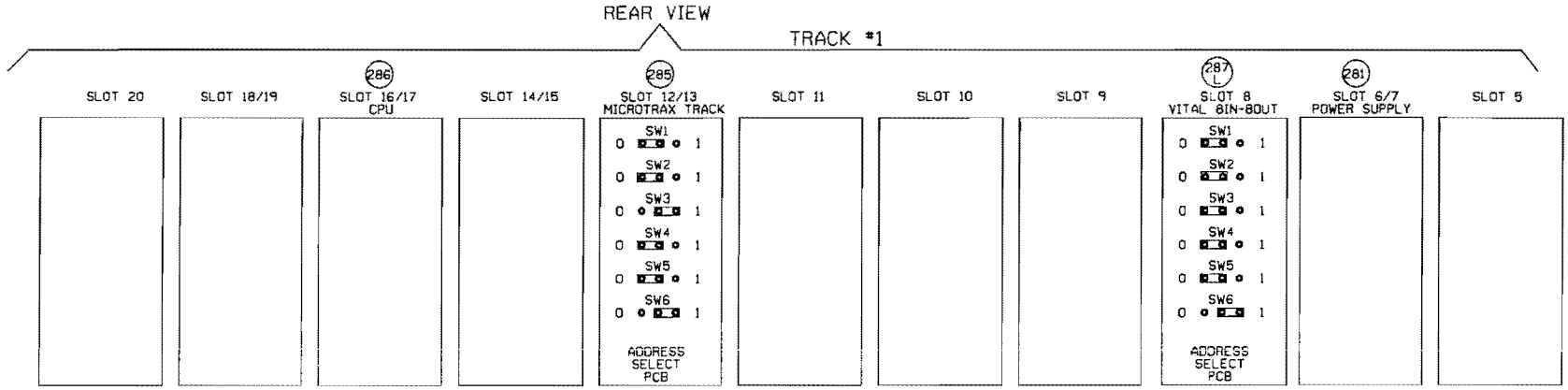

ML8CNWRR

PROGRAM ID 1 (BINARY 1)	X
PROGRAM ID 2 (BINARY 2)	
PROGRAM ID 3 (BINARY 4)	X
PROGRAM ID 4 (BINARY 8)	
PROGRAM ID 5 (BINARY 16)	
PROGRAM ID 6 (BINARY 32)	X
PROGRAM ID 7 (BINARY 64)	
PROGRAM ID 8 (BINARY 128)	
CODE PQTU?	X

PLACE AN "X" IN THE BOX FOR DESIRED CONFIGURATION.

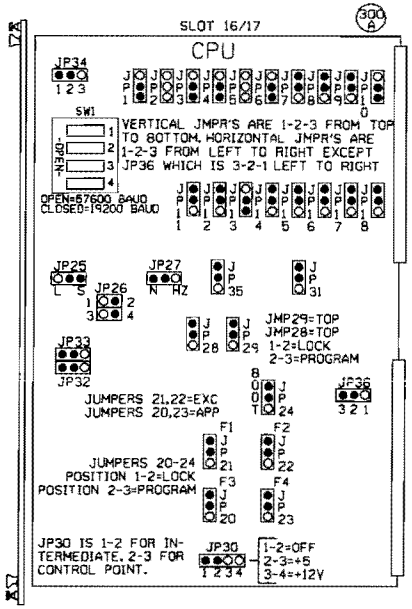

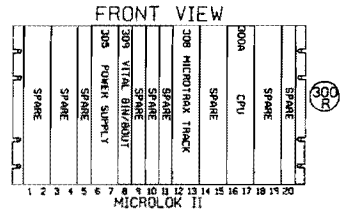

NEW SHEET
GENEVA SUBDIVISION
REGENERATIVE REPEATER
M.P. 23.76
8'X14' HOUSE

1 06-16-08 INSTALL HALF BLOCK SYSTEM FROM COLLEGE AVE. TO LOMBARD, ILL. PHASE 2 PART 2. MP. 23.76 TO MP. 20.40 AFE #89952 JJL / /CTC/MEP	
MODIFICATION LEVEL	
G.A. LAST LEVEL CHECKED	00
LAST LEVEL MOD THIS TYPICAL	00
LAST LEVEL BY DESIGNER	00
CHANGED FROM TYPICAL?	Y
no 02/01/88 ZTM,INTC,S	
UNION PACIFIC SIGNAL DESIGN	
DES: CTC	
DIG: CTC	
CHK: JJL	
A.F.E. 89952	
ID= GEN2376J5S	
UNION PACIFIC RAILROAD	
CHICAGO, ILLINOIS TO CLINTON, IOWA C.T.C. CIRCUITS	
Office of Sr AVP Engineering - Signal/TCO Omaha, Nebraska	
DATE 06-16-08	
SHEET 15	
DWG 23.76	
GEN	

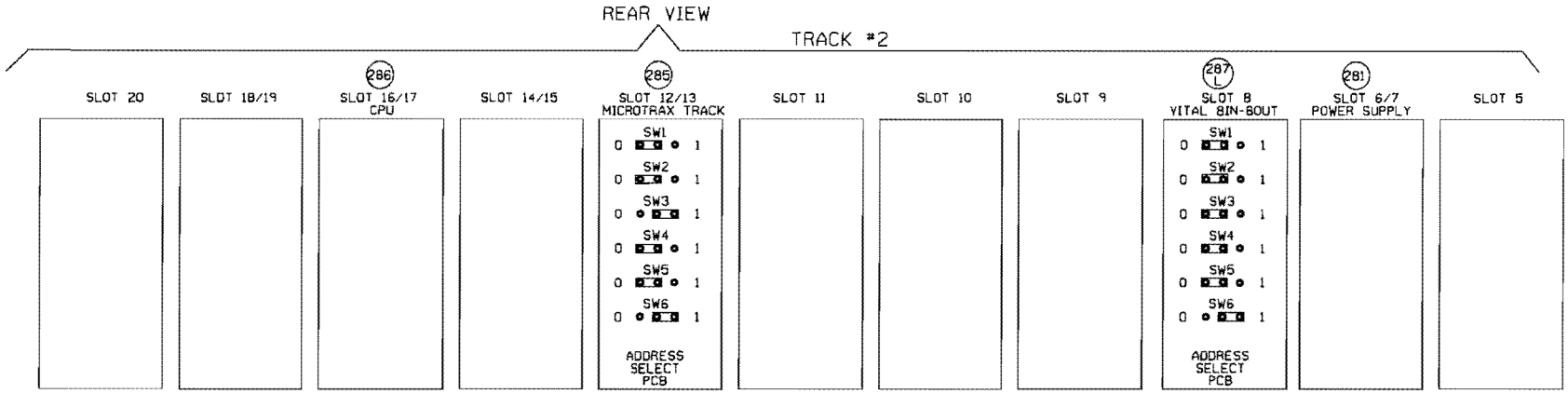

MLBCNWRR

PROGRAM ID 1 (BINARY 1)	X
PROGRAM ID 2 (BINARY 2)	
PROGRAM ID 3 (BINARY 4)	X
PROGRAM ID 4 (BINARY 8)	
PROGRAM ID 5 (BINARY 16)	
PROGRAM ID 6 (BINARY 32)	X
PROGRAM ID 7 (BINARY 64)	
PROGRAM ID 8 (BINARY 128)	
CODE PQTU?	X

PLACE AN "X" IN THE BOX FOR DESIRED CONFIGURATION.

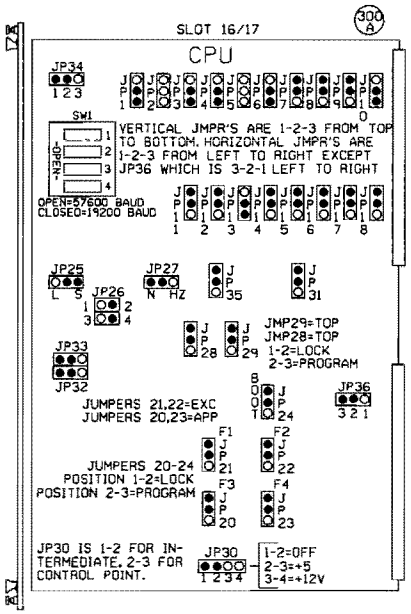

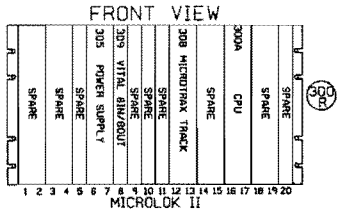

NEW SHEET
GENEVA SUBDIVISION
REGENERATIVE REPEATER
M.P. 23.76
8'X14' HOUSE

1 06-16-08 INSTALL HALF BLOCK SYSTEM FROM COLLEGE AVE. TO LOMBARDI ILL. PHASE 2 PART 2. (MP: 23.76 TO MP. 20.41) (AFE: 89952) JJL /CTC/MOR	MODIFICATION LEVEL		UNION PACIFIC SAFETY QUALITY PRODUCTIVITY SIGNAL DESIGN	DES: CTC	UNION PACIFIC RAILROAD CHICAGO, ILLINOIS TO CLINTON, IOWA C.T.C. CIRCUITS Office of Sr AVP Engineering - Signal/TCD Omaha, Nebraska	DATE 06-16-08
	O. A. LAST LEVEL CHECKED	DO		DIG: CTC		SHEET 15A
	LAST LEVEL MOD THIS TYPICAL	DO		CHK: JJL		DWG 23.76
	LAST LEVEL BY DESIGNER	DO		A.F.E. 89952		GEN
	CHANGED FROM TYPICAL?	Y		ID: GEN2376.15AS		

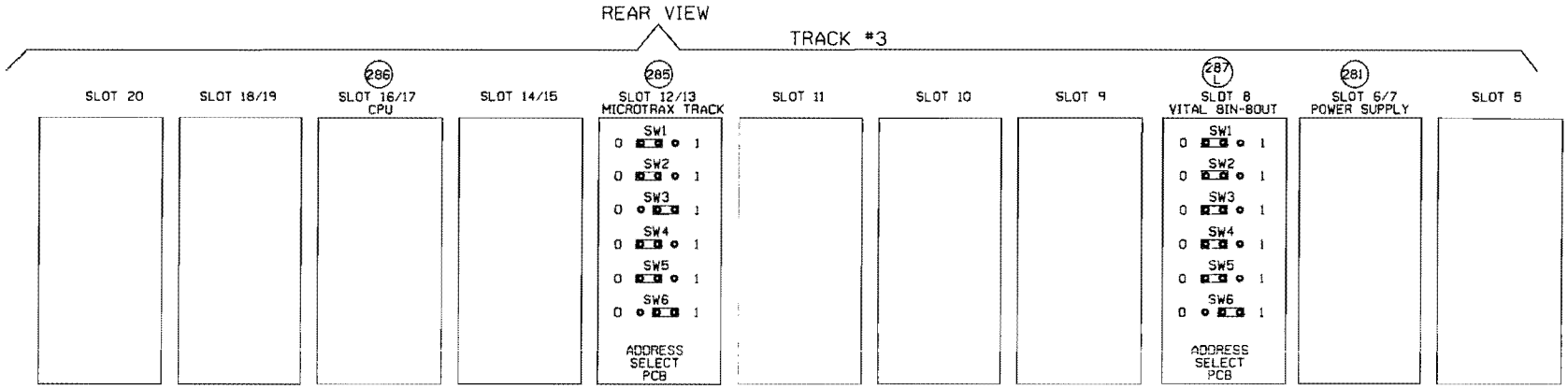

ML8CNWRR

PROGRAM ID 1 (BINARY 1)	X
PROGRAM ID 2 (BINARY 2)	
PROGRAM ID 3 (BINARY 4)	X
PROGRAM ID 4 (BINARY 8)	
PROGRAM ID 5 (BINARY 16)	
PROGRAM ID 6 (BINARY 32)	X
PROGRAM ID 7 (BINARY 64)	
PROGRAM ID 8 (BINARY 128)	
CODE PQTU?	X

PLACE AN "X" IN THE BOX FOR DESIRED CONFIGURATION.

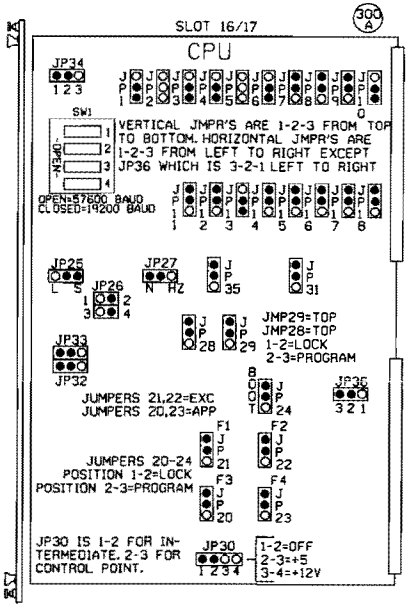

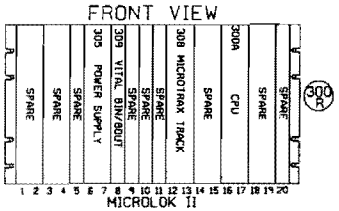

NEW SHEET
GENEVA SUBDIVISION
REGENERATIVE REPEATER
M.P. 23.76
8'X14' HOUSE

1 06-16-08 INSTALL HALF BLOCK SYSTEM FROM COLLEGE AVE. TO LOMBARD ILL. PHASE 2 PART 2. MP. 23.76 TO MP. 20.43 AFE #89952 JJL / /CTC/MCP	MODIFICATION LEVEL		UNION PACIFIC SIGNAL DESIGN	DES: CTC DIG: CTC CHK: JJL A.F.E. 89952 ID: GEN2376.158S	UNION PACIFIC RAILROAD CHICAGO, ILLINOIS TO CLINTON, IOWA C.T.C. CIRCUITS Office of Sr. AVP Engineering - Signal/TCO Omaha, Nebraska	DATE 06-16-08 SHEET 158 DWG 23.76 GEN
	D.A. LAST LEVEL CHECKED	DD				
	LAST LEVEL MOD THIS TYPICAL	DD				
	LAST LEVEL BY DESIGNER	DD				
	CHANGED FROM TYPICAL?	Y				

PLAN VIEW
8'x14' HOUSE
-NO SCALE-

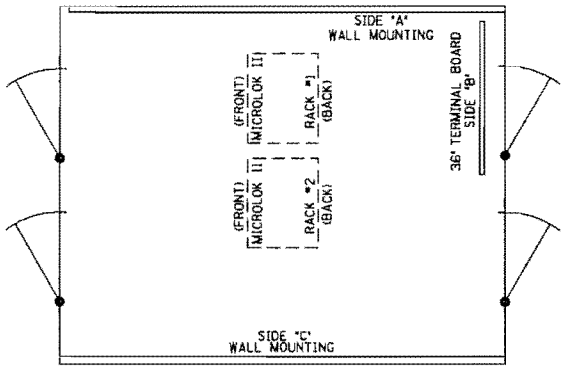

RACK #1

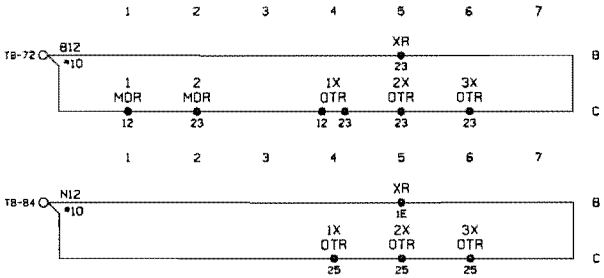

TYPICAL CONTACT CONFIGURATIONS
FOR PLUG-IN RELAYS

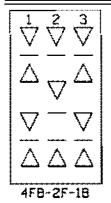

LEGEND

— = CONTACT HEEL

▽ = CONTACT FRONT

△ = CONTACT BACK

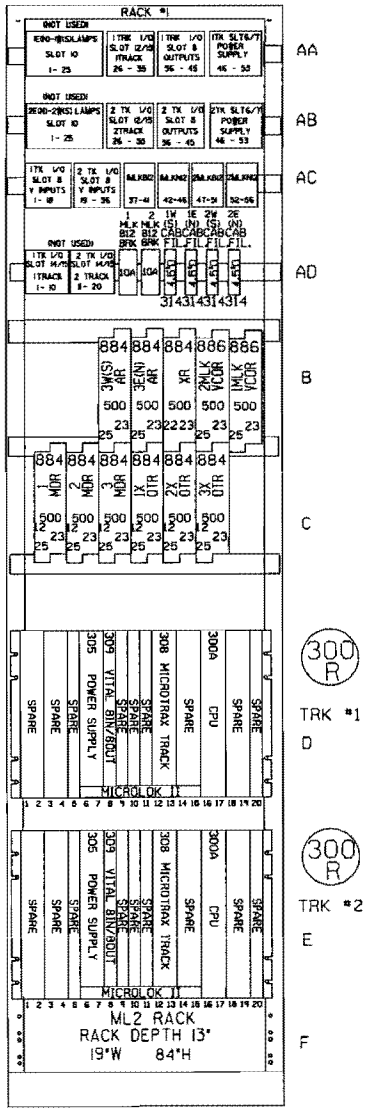

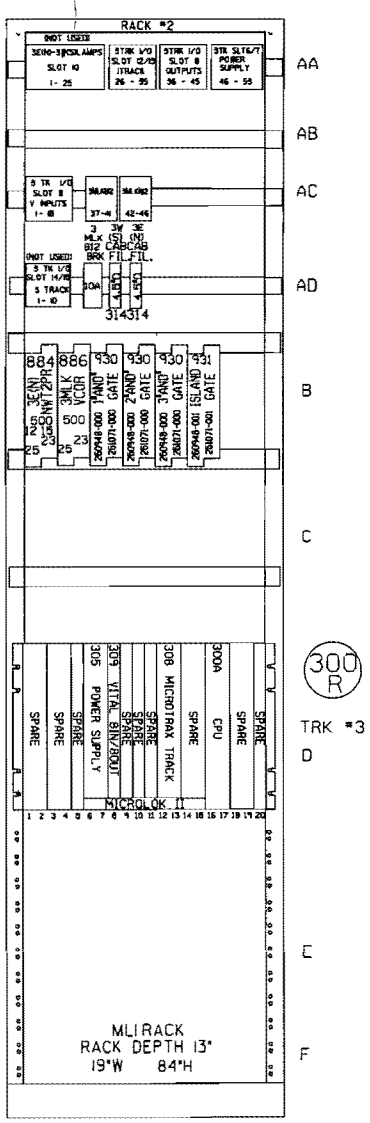

NEW SHEET

WHEATON, ILLINOIS
COLLEGE AVENUE
M.P. 23.76
GENEVA SUBDIVISION
D.O.T.#174 952N

1	06-16-08 INSTALL HALF BLOCK SYSTEM FROM COLLEGE AVE. TO LOMBARD, ILL. PHASE 2 PART 2. (MP. 23.76 TO MP. 20.4) APE #89952 JJL /CTC/MDF	MODIFICATION LEVEL		UNION PACIFIC	DES: CTC	UNION PACIFIC RAILROAD	DATE 06-16-08
		D. A. LAST LEVEL CHECKED	00		DIG: CTC	CHICAGO, ILLINOIS TO CLINTON, IOWA C.T.C. CIRCUITS	SHEET 16
		LAST LEVEL MOD THIS TYPICAL	00		CHK: JJL		DWG 23.76
		LAST LEVEL BY DESIGNER	00		A.F.E. 89952		GEN
		CHANGED FROM TYPICAL?	Y	SIGNAL DESIGN	ID= GENZ376.16X	Office of Sr. AVP Engineering - Signal/TCO Omaha, Nebraska	

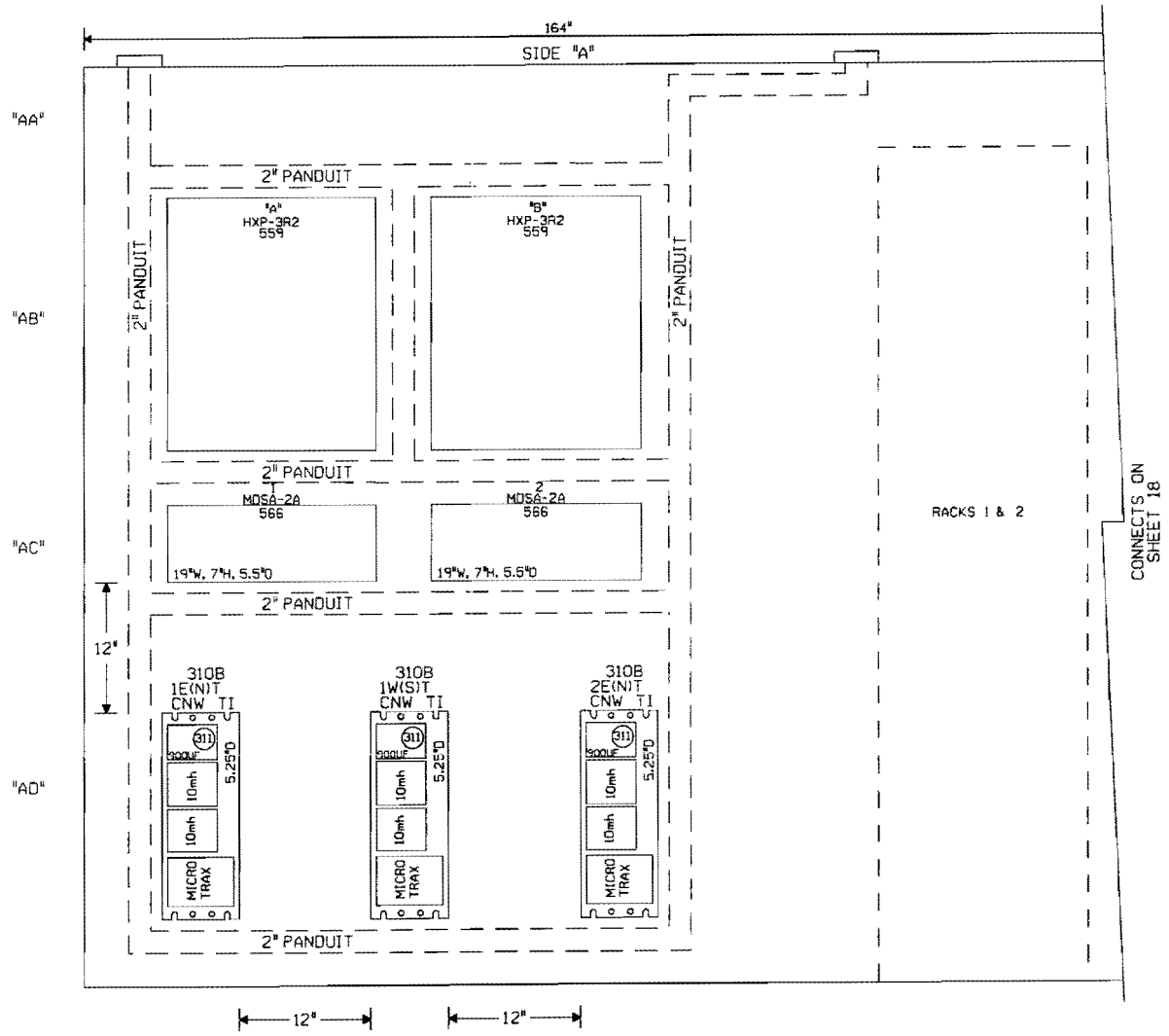

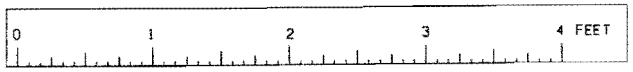

SCALE: 1.5 INCHES = 1 FOOT

NEW SHEET

WHEATON, ILLINOIS
COLLEGE AVENUE
M.P. 23.76
GENEVA SUBDIVISION
D.O.T.#174 952N

1	06-16-08 INSTALL HALF BLOCK SYSTEM FROM COLLEGE AVE. TO LOMBARD, ILL. PHASE 2 PART 2. (MP. 23.76 TO MP. 20.41) AFE #89952 JJL /CTC/MDF	UNION PACIFIC SAFETY SIGNAL DESIGN	DES: CTC DIG: CTC CHK: JJL A.F.E. 89952 ID= GEN2376.17X	UNION PACIFIC RAILROAD CHICAGO, ILLINOIS TO CLINTON, IOWA C.T.C. CIRCUITS Office of Sr AVP Engineering - Signal/TCO Omaha, Nebraska	DATE 06-16-08 SHEET 17 DWG 23.76 GEN	

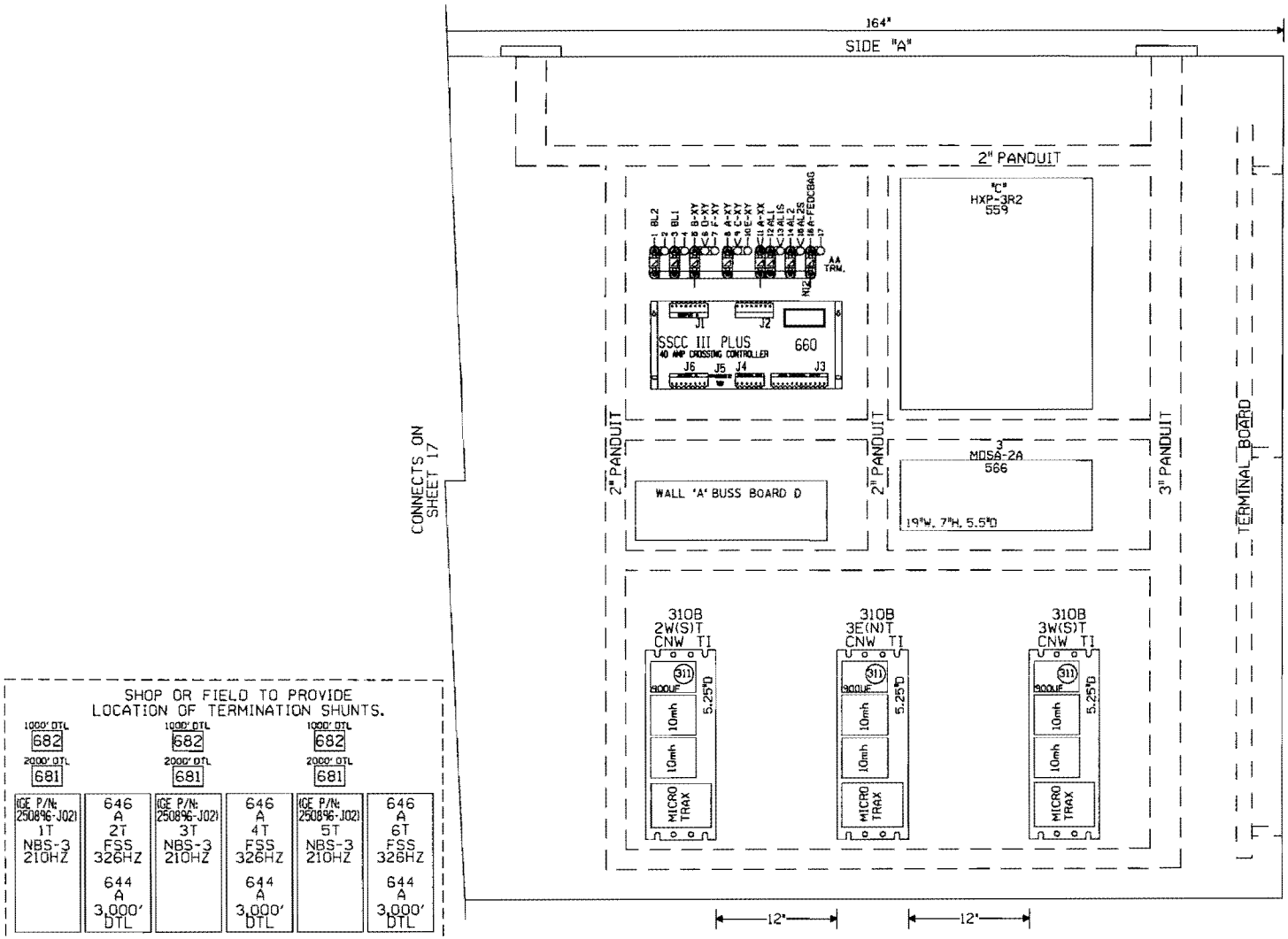

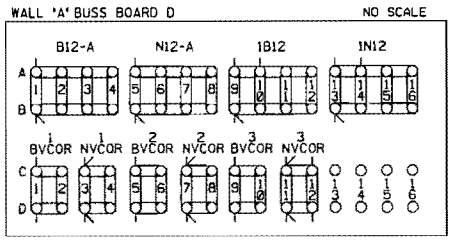

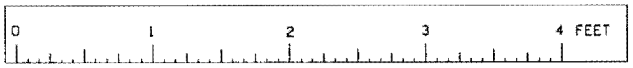

SCALE: 1.5 INCHES = 1 FOOT

NEW SHEET
WHEATON, ILLINOIS
COLLEGE AVENUE
M.P. 23.76
GENEVA SUBDIVISION
O.O.T.#174 952N

1	06-16-08 INSTALL HALF BLOCK SYSTEM FROM COLLEGE AVE. TO LOMBARD, ILL. PHASE 2 PART 2. (MP. 23.78 TO MP. 20.41) AFE #89952 JJL /CTC/MDF	UNION PACIFIC SIGNAL DESIGN	DES: CTC DIG: CTC CHK: JJL A.F.E. 89952 ID= GEN2376.18X	UNION PACIFIC RAILROAD CHICAGO, ILLINOIS TO CLINTON, IOWA C.T.C. CIRCUITS Office of Sr.AVP Engineering - Signal/TCD Omaha, Nebraska	DATE 06-16-08 SHEET 18 DWG 23.76 GEN		

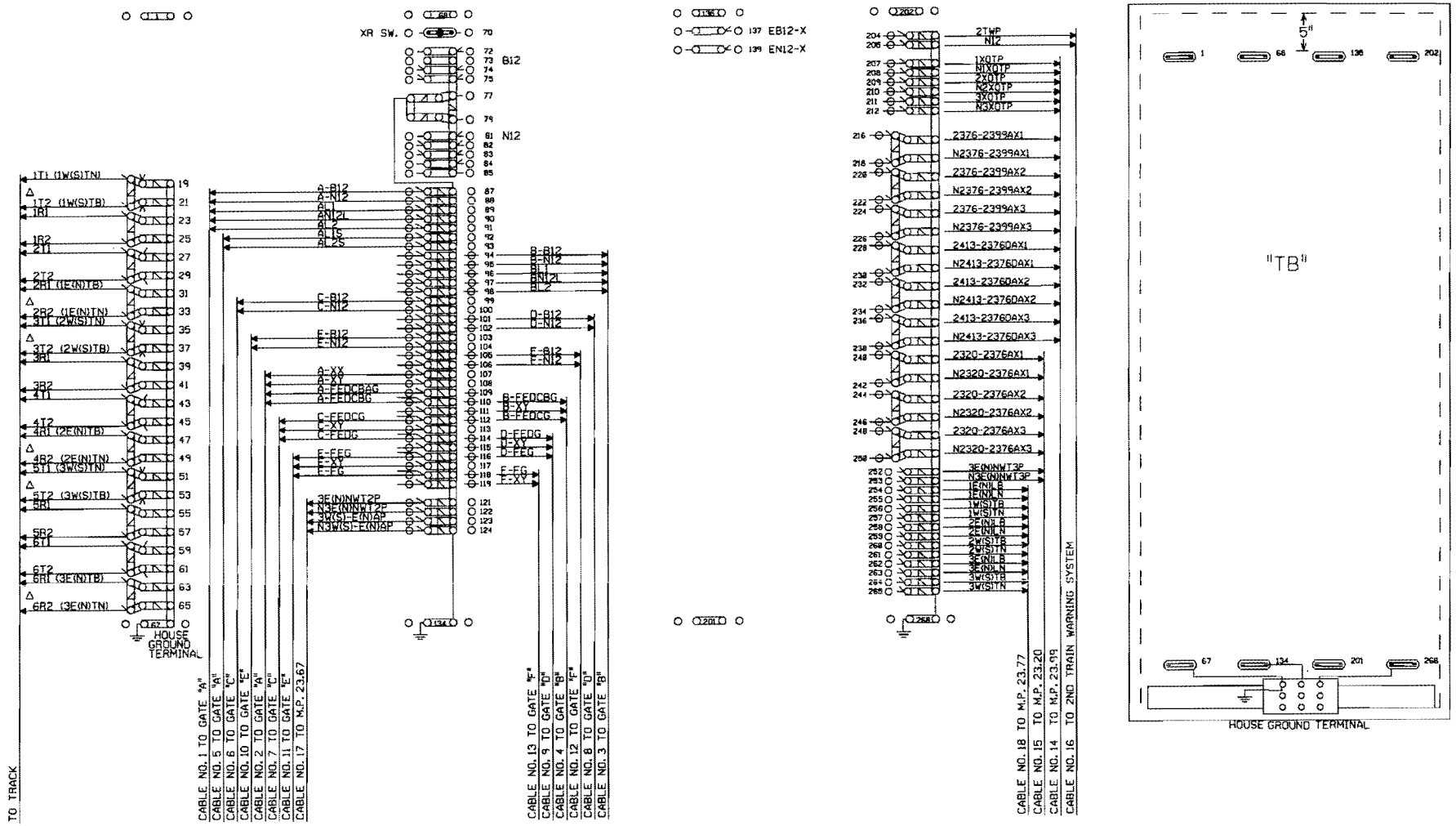

SEE SIGNAL STANDARD DRAWING 846120UP FOR HOUSE GROUNDING SCHEME

△ FIELD ENSURE PROPER TRACK POLARITY AND "AC" ACCORDINGLY

NEW SHEET

WHEATON, ILLINOIS
COLLEGE AVENUE
M.P. 23.76
GENEVA SUBDIVISION
D.O.T.#174 952N

1 06-16-08 INSTALL HALF BLOCK SYSTEM FROM COLLEGE AVE. TO LOMBARD, ILL. PHASE 2 PART 2. MP. 23.76 TO MP. 20.41 AFE #89952 JJL / /CTC/MDF	MODIFICATION LEVEL		UNION PACIFIC SAFETY SIGNAL DESIGN	DES: CTC	UNION PACIFIC RAILROAD
	Q.A. LAST LEVEL CHECKED	DQ		DIG: CTC	CHICAGO, ILLINOIS TO CLINTON, IOWA C.T.C. CIRCUITS
	LAST LEVEL MOD THIS TYPICAL	DQ		CHG: JJL	
	LAST LEVEL BY DESIGNER	DQ		A.F.E. 89952	
	CHANGED FROM TYPICAL?	Y		ID= GEN2376.19X	Office of Sr. AVP Engineering - Signal/TCO Omaha, Nebraska
	5:12/91/88 MCROEGS.15				

DATE 06-16-08
SHEET 19
DWG 23.76
GEN

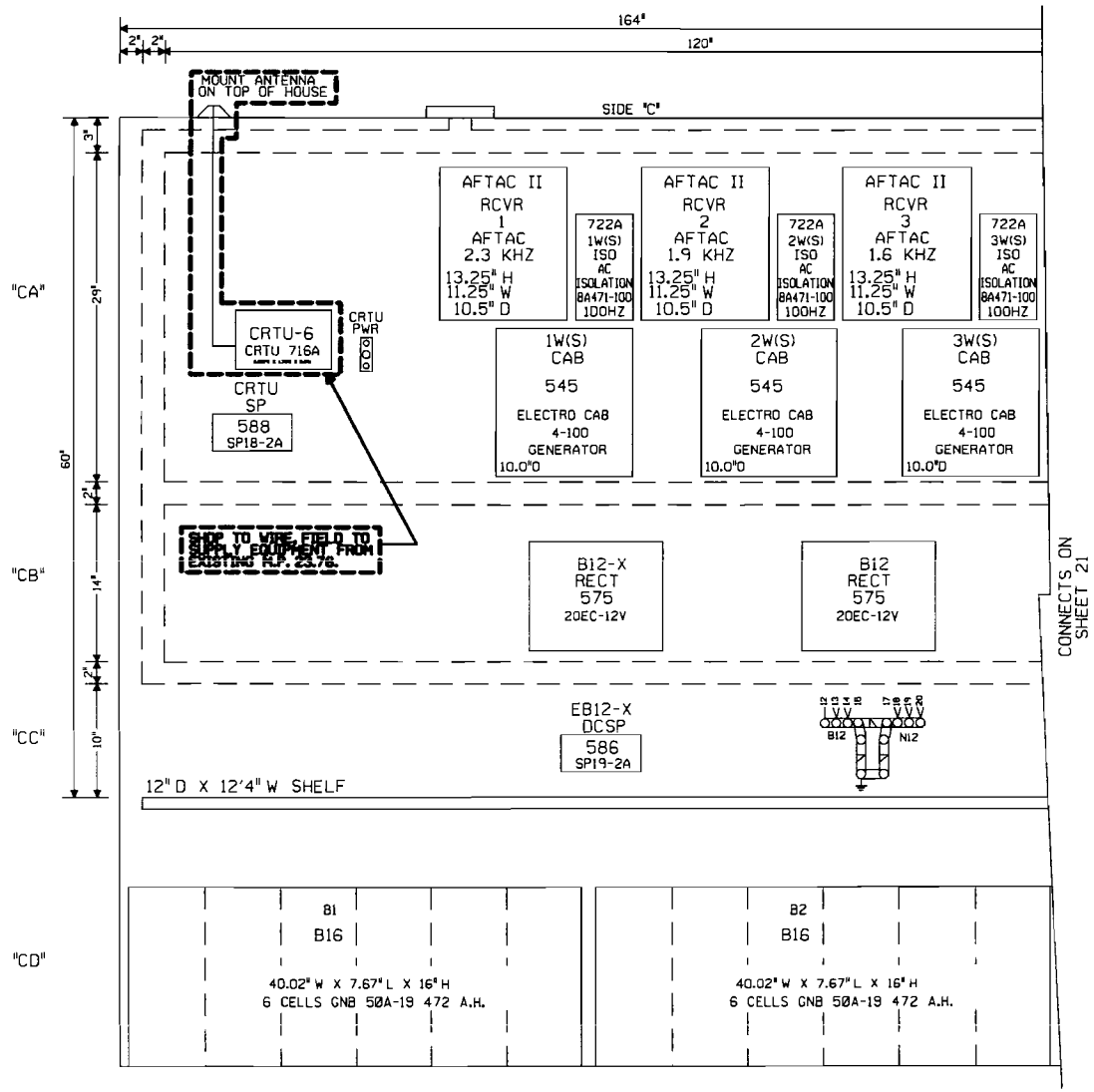

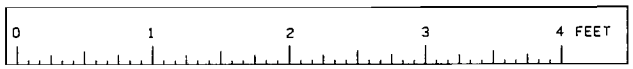

SCALE: 1.5 INCHES = 1 FOOT

NEW SHEET

WHEATON, ILLINOIS
COLLEGE AVENUE
M.P. 23.76
GENEVA SUBDIVISION
D.O.T.#174 952N

1	06-16-08 INSTALL HALF BLOCK SYSTEM FROM COLLEGE AVE. TO LOMBARD, ILL. PHASE 2 PART 2. (MP. 23.76 TO MP. 20.41) AFE #89952 JJL /CTC/MDF

UNION PACIFIC
QUALITY PRODUCTIVITY SAFETY
SIGNAL DESIGN

DES:	CTC
DIG:	CTC
CHK:	JJL
A.F.E.	89952
ID= GEN2376.20X	

UNION PACIFIC RAILROAD

CHICAGO, ILLINOIS TO
CLINTON, IOWA
C.T.C. CIRCUITS

Office of Sr.AVP Engineering - Signal/TCO Omaha, Nebraska

DATE	06-16-08
SHEET	20
DWG	23.76
	GEN

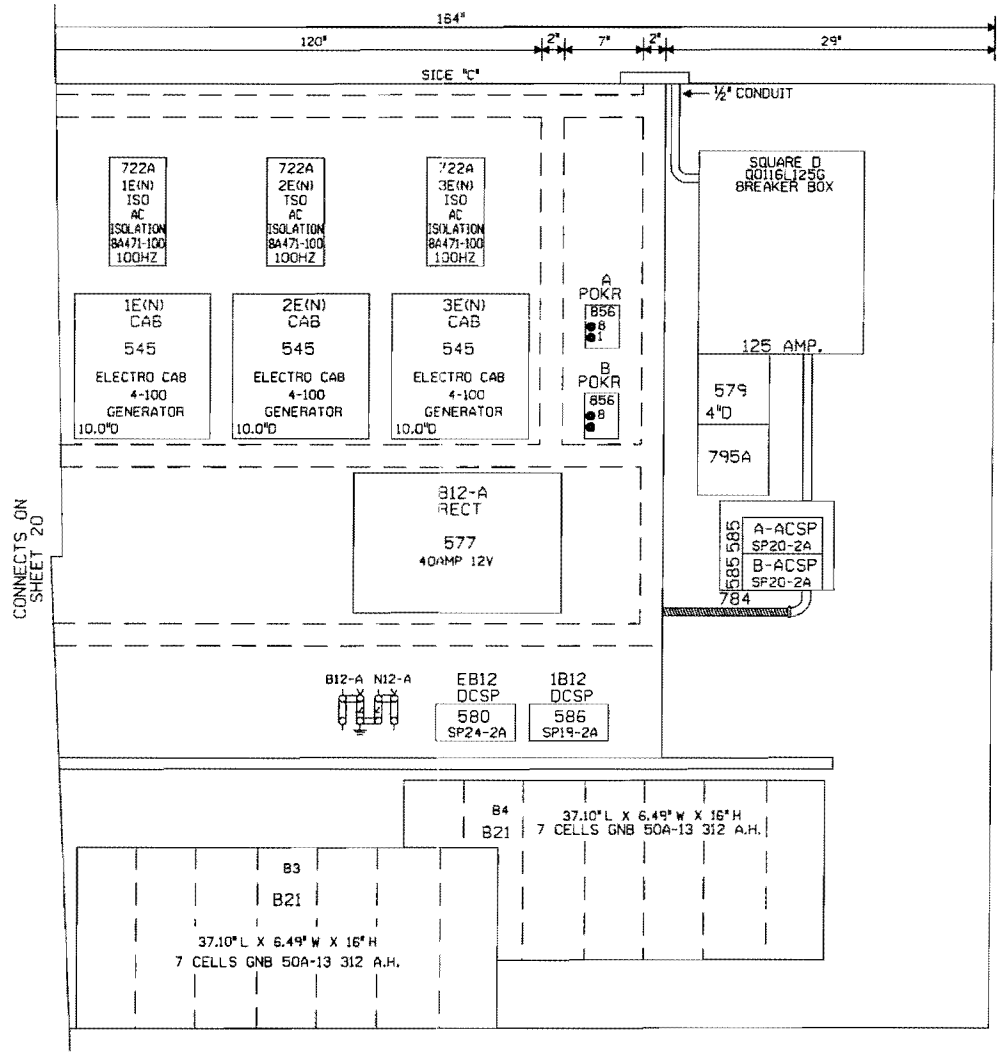

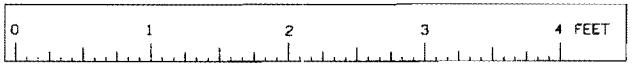

SCALE: 1.5 INCHES = 1 FOOT

NEW SHEET

WHEATON, ILLINOIS
COLLEGE AVENUE
M.P. 23.76
GENEVA SUBDIVISION
D.O.T.#174 952N

1	06-16-08 INSTALL HALF BLOCK SYSTEM FROM COLLEGE AVE. TO LOMBARD, ILL. PHASE 2 PART 2. (MP. 23.76 TO MP. 20.41) AFE #89952 JJL / /CTC/MDF

UNION PACIFIC
QUALITY PRODUCTIVITY SAFETY
SIGNAL DESIGN

DES:	CTC
DIG:	CTC
CHK:	JJL
A.F.E.	89952
ID:	GEN2376.21X

UNION PACIFIC RAILROAD

CHICAGO, ILLINOIS TO
CLINTON, IOWA
C.T.C. CIRCUITS

Office of Sr.AVP Engineering - Signal/TCO Omaha, Nebraska

DATE	06-16-08
SHEET	21
DWG	23.76
	GEN