Form 3

ORIGINAL

(File original and two duplicates)

STATE OF ILLINOIS

ILLINOIS COMMERCE COMMISSION

RECEIVED
MAR 9 2009
Illinois Commerce Commission
RAIL SAFETY SECTION

Petition for permission to make a major change in crossing protection, or to install new protection under 92 Illinois Administrative Code 1535.400 (d)

X-12868
T09-0038

Date: FEBRUARY 17, 2009

To the Illinois Commerce Commission:

The petitioner UNION PACIFIC 174937L shows
(name of railroad company)

(1) That it is a railroad company operating a line of railroad in the State of Illinois.

(2) That petitioner proposes and hereby makes application for authority to make a major change in crossing protection, or to install new protection, under 92 Illinois Administrative Code 1535.400 (d) adopted by this Commission.

(3) That the location of the crossing, the nature of protection now established and proposed to be established, and other pertinent facts in connection therewith, are set forth in the statement attached to and forming part of this petition.

(4) That petitioner's reasons and purpose, with reference to its said proposal are

IMPROVE PEDESTRIAN SAFETY AT CROSSINGS ADJACENT TO PASSENGER STATIONS BY INSTALLING PLATFORM DIVERSIONS AND ADDITIONAL PEDESTRIAN CROSSING GATES, COMPLEMENTED BY A "SECOND TRAIN APPROACHING" SYSTEM.

(State reasons and purpose)

(5) That the facts set forth in this petition and in the statement and plans or plats attached thereto, are, all of them, true and correct to the best of petitioner's knowledge and belief.

WHEREFORE, the petitioner prays that the Commission will, if deemed desirable by the Commission, set the aforesaid matter for hearing, and that the Commission enter an order or adopt a resolution consenting to and granting authority for the making of the said proposed changes in or additions to crossing protection.

UNION PACIFIC RAILROAD
(Railroad Company)

By Thomas R. Andryuk

(Attorney for Petitioner)

(Attorney's Address)

DOCKETED

MAR 19 2009

Statement, attached to and part of an application for permission to make a major change in crossing protection or to install new protection, under 92 Ill. Adm. Code 1535.400 (d).

1. Name of Railroad Company UNION PACIFIC RAILROAD

2. Crossing Number 174937L
(Separate statement should be filed for each crossing)

3. Village or City VILLA PARK
(in or near)

4. Name of Street or Highway ARDMORE

5. Public Agency Maintaining Highway _____
(D.O.T., County, Township, City)

6. Protection now established: (Give full description. Indicate the hours of any manual protection.)
GATES AND CANTILEVER

7. Protection desired: (Give details) ADDITION OF PEDESTRIAN GATES

8. Number of main tracks 3 Other tracks Ø

9. Number of passenger train movements: 6 a.m. to 6 p.m. 35 6 p.m. to 6 a.m. 17

10. Number of freight train movements: 6 a.m. to 6 p.m. 26 6 p.m. to 6 a.m. 26

11. Approximate number of switch movements: 6 a.m. to 6 p.m. 1 6 p.m. to 6 a.m. 3

12. Maximum speed of trains at crossing on each track in each direction 70 MPH

13. Passenger platforms served by tracks within the limits of track circuits, if any VILLA PARK STATION

14. Where automatic signals or gates are proposed, approximate number of train or engine movements daily which would cause false indications or operation
N/A

15. Nature and approximate amount of street or highway traffic over crossing 10,100 AADT

16. In addition to the information listed hereinbefore in Form 3, attach a track plan or plat of the proposed crossing. This plan should show:

(a) Width and surface of highway.
(b) Highway intersections (including private driveways to be so indicated) and location of established highway signs or signals within 100 feet of crossing.
(c) Location of tracks, switches and other railroad facilities such as block signals, etc. within limits of track circuits, present and/or proposed.
(d) Where automatic protection is proposed, show proposed location of signals (side lights, cantilevers, etc., if any).
(e) Show the length of each operating track section within the control limits of the crossing protection and its function.

ADDITIONAL INFORMATION

SEE CIRCUIT PLANS.

VERIFICATION

I, THOMAS N. ANDRYUK, first being duly sworn upon oath depose and say that I am MANAGER OF FIELD ENGINEERING of UNION PACIFIC RAILROAD, an DELAWARE corporation; that I have read the above and foregoing petition by me subscribed and know the contents thereof; that said contents are true in substance and in fact, except as to those matters stated upon information and belief, and as to those, I believe same to be true.

UNION PACIFIC RAILROAD

Thomas N. Andryuk

Subscribed and sworn to before me this _____ day of _____ 19____.

Notary Public, Illinois.

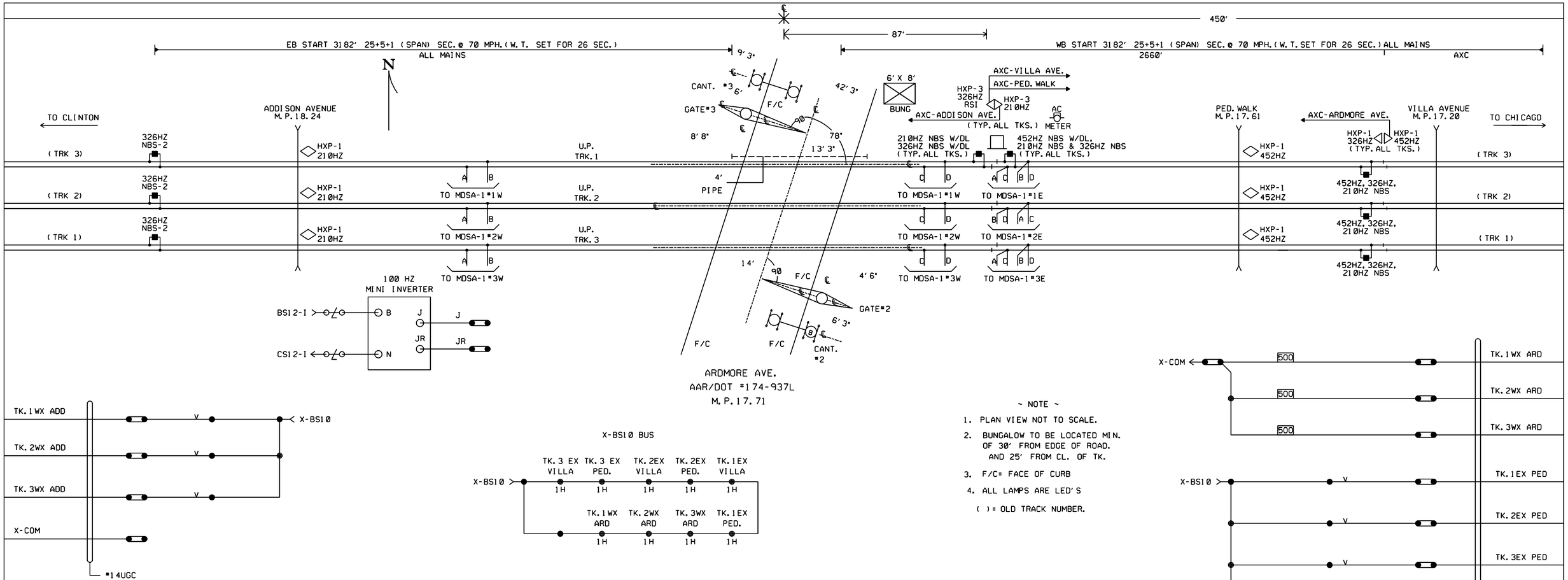

~ NOTE ~

1. PLAN VIEW NOT TO SCALE.
2. BUNGALOW TO BE LOCATED MIN. OF 30' FROM EDGE OF ROAD. AND 25' FROM CL. OF TK.
3. F/C= FACE OF CURB
4. ALL LAMPS ARE LED'S

( ) = OLD TRACK NUMBER.

REVISIONS

DRAWN BY SJS DATED 10-13-90 AFE 87898 ACCT INST. JOINTS ARDMORE AVE.	
10-14-93 JEP REV. PER F.C. DATED 8-31-93 BY TPZ ACCT. JOINTS AND ELECTRO CODE REPEATERS IN- STALLED & CROSSING CIRCUITS ADJUSTED ACCORD. IN SERV. 6/91	
REV. 9-15-95 INSTALL BI-DIR SIGNALLING "HM" TO "NI" 11-7-94 TPZ/HAR/CDM	
REV. 2-27-98 ADDED DIMENSIONAL INFORMATION FURNI- SHED BY FIELD AND REVISED TO SHOW ALL LOCATIONS WITHIN XING APPROACHES ON XING FRT. SHT. PER U.P. STANDARDS. 5-20-97 CJB/WITT/JNM	
REV. 7-5-00 REVISED PER FIELD A.C. 4-21-00 PJA/NST	
REV. 8-26-02 HCA ISL. INPUTS REVISED REC. #10862 7-25-02 TH/WITT/ /	
REV. 7-2-03 INSTALLED CRTU. W.O. #3327 REC. #11779 5-23-03 JJO/WITT/WITT/EML	
REV. 6-23-04 REPLACED HXP-1 WITH HXP-3. REC. #11848 5-9-03 TAH/WITT	
REV. 2-11-05 REPLACED PMD-2'S WITH HXP-1'S AT PED WALK (M.P. 17.61). REC. #12434 1-10-05 TAH/WITT	
9 REV. 09-26-07 M.P.'S CHANGED ON CROSSINGS PER AC. M.P. 10.50 - M.P. 27.54 REC. #14590 06-07-07 JJO/NST/ /	
REV. 9-25-08 INSTALLED LED'S & CHANGED BSI4 TO BSI2. REC. #15469 4-13-07 AMH/WITT	

UNION PACIFIC
QUALITY PRODUCTIVITY SAFETY
SIGNAL DESIGN

VILLA PARK, IL.
ARDMORE AVE.
M.P. 17.71

GENEVA SUB

MATCH TO: GENI824JX

ID=GEN1771.1X

MATCH TO: GEN0176L00C

SYSTEM$TIME$$$$$$

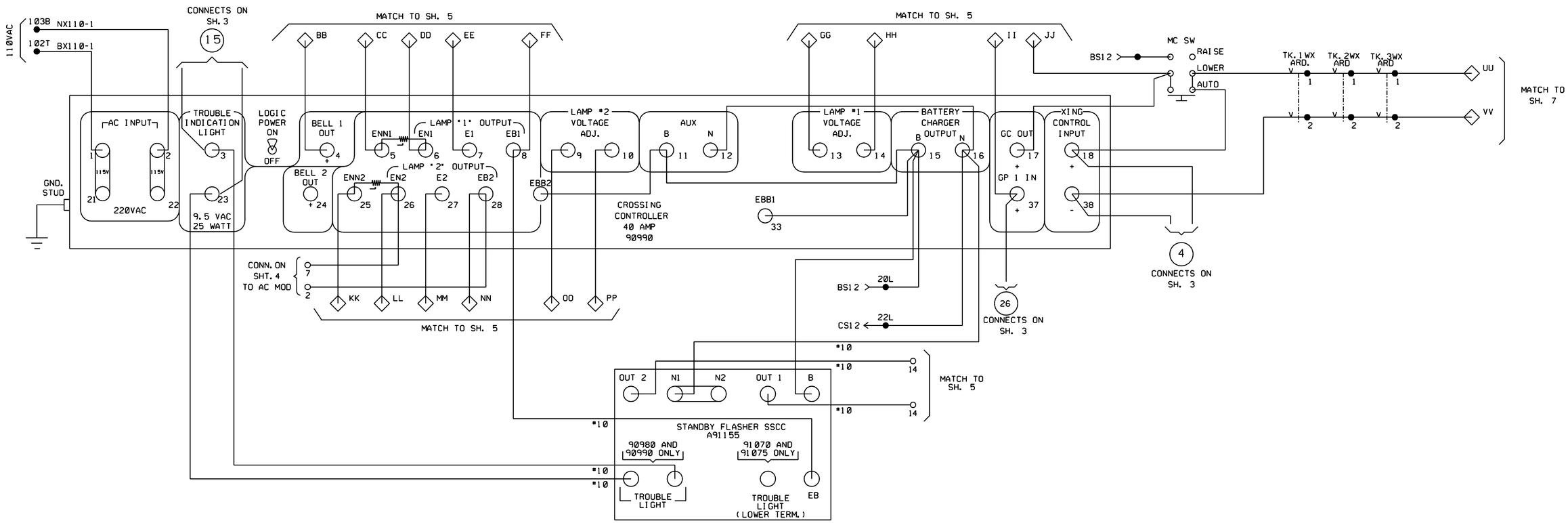

~ NOTES ~

1. STANDBY FLASHER UNIT SSCC 91155 INSTALLATION AND TESTING PROCEDURES PER SAFETRAN SYSTEMS DOCUMENT NO. SIG-00-98-10 VERSION A.

REVISIONS

DRAWN BY SJS DATED 10-13-90 AFE 87898 ACCT INST. JOINTS ARDMORE AVE.	
10-14-93 JEP REV. PER F.C. DATED 8-31-93 BY TPZ ACCT. JOINTS AND ELECTRO CODE REPEATERS IN- STALLED & CROSSING CIRCUITS ADJUSTED ACCORD. IN SERV. 6/91	
REV. 9-15-95 INSTALL BI-DIR SIGNALLING "HM" TO "NI" 11-7-94 TPZ/HAR/CDM	
REV. 7-10-98 HCA UPGRADE 1-5-98 ER/WITT/RCP	
REV. 8-26-02 HCA ISL. INPUTS REVISED REC. #10862 7-25-02 TH/WITT/ /	
REV. 7-2-03 INSTALLED CRTU. W.O. #3327 REC. #11779 5-23-03 JJO/WITT/WITT/EML	
REV. 6-23-04 REPLACED HXP-1 WITH HXP-3. REC. #11848 5-9-03 TAH/WITT	
7 REV. 09-26-07 M.P.'S CHANGED ON CROSSINGS PER AC. M.P. 10.50 - M.P. 27.54 REC. #14590 06-07-07 JJO/NST/ /	
REV. 9-25-08 INSTALLED LED'S & CHANGED BS14 TO BS12. REC. #15469 4-13-07 AMH/WITT	

UNION PACIFIC

QUALITY PRODUCTIVITY SAFETY

SIGNAL DESIGN

VILLA PARK, IL.
ARDMORE AVE.
M.P. 17.71

GENEVA SUB

ID=GEN1771.2X

SYSTEM$TIME$$$$$$

LOD NOTES:

1. THE POWER FOR AN LOD MUST BE WIRED TO THE SAME SOURCE AS THE LIGHTS THEY ARE MONITORING.
2. ONE REFERENCE VOLTAGE PER LOD PER HCA ANALOG INPUT.
3. TWO LOD'S OR FOUR LOD OUTPUTS PER HCA ANALOG INPUT.
4. ONE LOD OUTPUT PER FOUR ANALOG INPUTS.
5. A RESISTOR MUST ALWAYS BE INSTALLED IN SERIES BETWEEN THE LOD OUTPUTS AND THE HCA ANALOG INPUTS.
6. THE NUMBER OF UNIQUE REFERENCE VOLTAGES IS DETERMINED BY THE NUMBER OF UNIQUE BATTERY BANKS AND/OR LIGHTING TRANSFORMERS.

HCA NOTES:

1. CPU BOARD REV LEVEL "F" OR HIGHER.
2. SOFTWARE REV LEVEL "J" OR GREATER ON IC13.
3. DIP SWITCH #1: OFF, ON, ON, ON, ON, ON, OFF, OFF.
4. DIP SWITCH #2: OFF, OFF, OFF, OFF, OFF, OFF, OFF, OFF.
5. JUMPER ALL UNUSED DIGITAL "+" INPUTS TO THE B TERMINAL.
6. JUMPER ALL UNUSED DIGITAL "-" INPUTS TO THE N TERMINAL.
7. THE ANALOG AND DIGITAL INPUT ASSIGNMENT MUST BE MARKED ON THE HCA SHEET.
8. DO NOT JUMPER INPUTS WITH DIFFERENT VOLTAGE REFERENCES TOGETHER.
9. REFER TO "FIELD INSTRUCTIONS FOR INSTALLATION AND OPERATION OF HIGHWAY CROSSING ANALYZERS" FOR EQUIPMENT SETUP.

MODEM NOTES

1. GAS ARRESTOR, RELIABLE ELECTRIC # 392 SVSR2.
2. STATION WIRE, 4 COND, #PVC-4C-22B-POP STOCK #078-8040
3. MODULAR BLOCK, #SE-625A2-4-50 STOCK #078-1000

5ISLHCA96

ANALOG #1: 1 LOD-GATE 2-
ANALOG #2: 2 LOD-CANT 2-
ANALOG #3: 3 LOD-GATE 3-
ANALOG #4: 4 LOD-CANT 3-

DIGITAL #1: ISLAND - 1 U.P. TK.3-
DIGITAL #2: ISLAND - 2 U.P. TK.2-
DIGITAL #3: ISLAND - 3 U.P. TK.1-
DIGITAL #4: ISLAND - 4
DIGITAL #5: ISLAND - 5
DIGITAL #6: XR-
DIGITAL #7: GATE DOWN A-GATE 3-
DIGITAL #8: GATE DOWN B-GATE 2-
DIGITAL #9: GP-
DIGITAL #10: ISLAND ONLY
DIGITAL #11: FOREIGN XR
DIGITAL #12: TEST-
DIGITAL #13: TROUBLE-
DIGITAL #14: POR

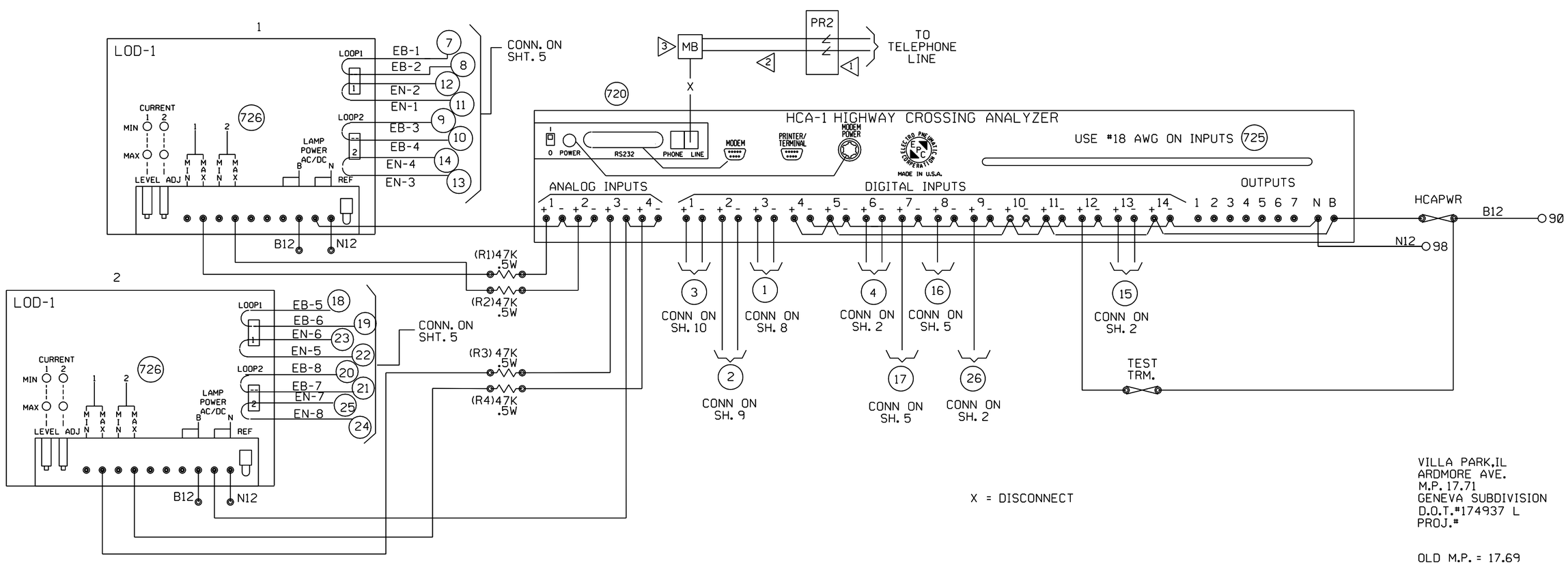

VILLA PARK,IL
ARDMORE AVE.
M.P. 17.71
GENEVA SUBDIVISION
D.O.T.#174937 L
PROJ.#

OLD M.P. = 17.69

6 REV. 09-26-07 M.P.'S CHANGED ON CROSSINGS PER AC. M.P. 10.50 - M.P. 27.54 REC. #14590 06-07-07 JJO/NST/ /	REV. 6-23-04 REPLACED HXP-1 WITH HXP-3. REC. #11848 5-9-03 TAH/WITT	REV. 7-2-03 INSTALLED CRTU. W.O. #3327 REC. #11779 5-23-03 JJO/WITT/WITT/EML	REV. 8-26-02 HCA ISL. INPUTS REVISED REC.# 10862 7-25-02 TH/WITT/ /	2 REV. 7-5-00 REVISED PER FIELD A.C. 4-21-00 PJA/NST	1 REV. 7-6-98 HCA UPGRADE 1-5-98 ER/WITT/RCP	MODIFICATION LEVEL		UNION PACIFIC SAFETY SIGNAL DESIGN	DES: RCP DIG: RCP CHK: A.F.E. ID= GEN1771.3X	UNION PACIFIC RAILROAD VILLA PARK,IL HIGHWAY CROSSING SIGNAL CIRCUIT PLANS Office of Sr.AVP Engineering - Signal/TCO OMAHA NEBR.	DATE 10-22-96 SHEET 3 DWG 17.71 GEN
						Q.A. LAST LEVEL CHK'D.	BJ				
						LAST LEVEL MOD. THIS TYP.	BJ				
						LAST LEVEL BY DESIGNER.	00				
						CHANGED FROM TYP.? Y/N	Y				

(REV. 11-29-95) (HCAGC.2

OLD ID = GEN01769.01A

INDEX NO.=169513

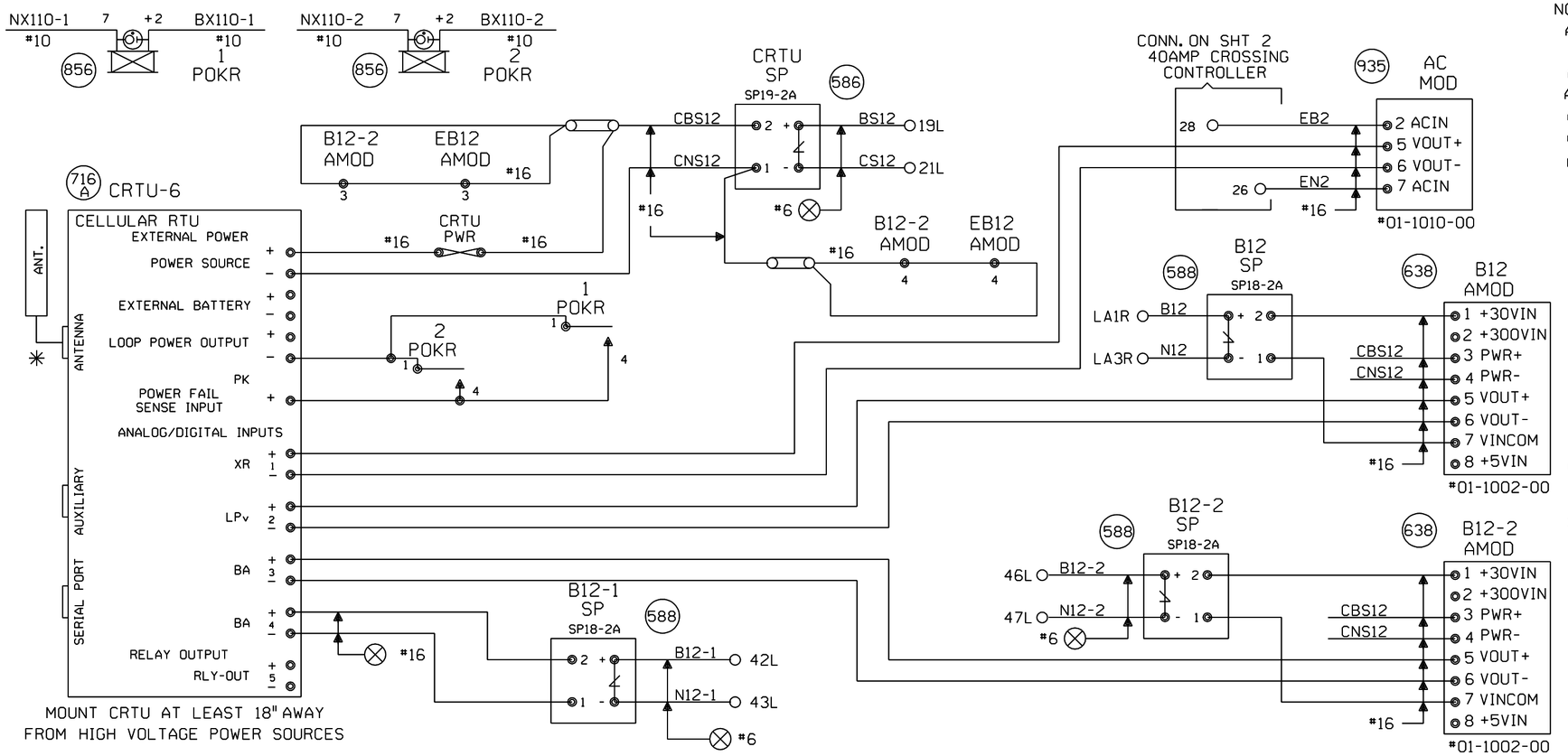

NOTES:

ALL DIODES 1N5060 OR 1N4004 UNLESS OTHERWISE NOTED.
✳ MOUNT ANTENNA ON TOP OF HOUSE.
ALL WIRES #18 UNLESS OTHERWISE NOTED.
ALL UNUSED 'NC' INPUTS MUST BE TIED HIGH TO BATTERY
ALL UNUSED ANALOG INPUTS MUST BE TIED HIGH TO BATTERY
ALL UNUSED 'NO' INPUTS MUST BE DISCONNECTED

CRTU FRONT PANEL DISPLAY CHART INDICATES NORMAL STATE

■ DIGITAL INPUT HIGH, OR POWER FAIL INPUT CLOSED

□ DIGITAL INPUT LOW, OR POWER FAIL INPUT OPEN

NORMAL STATE FOR ANALOG CHANNELS IS EQUAL TO THE STORED NOMINAL VOLTAGE +120% OR -81%

■ L ← LATCH IS SET BECAUSE CRTU DETECTED AN ALARM CONDITION

12.06V L ←

'sRUN MODE' 'sRUN MODE-SILENT'

↳ CRTU RADIO IS DISABLED. REPROGRAM CRTU WITH LAPTOP.

ANALOG MODULES CONVERT DC VOLTAGE TO A SQUARE WAVE. A WORKING ANALOG MODULE WILL HAVE 4.5VDC TO 8.0VDC BETWEEN 5VOUT+ AND 6VOUT-. WHERE, 0VOLTS = 0HZ OUT, 30VOLTS = 10KHZ OUT, AND 15VOLTS = 5KHZ OUT MAKE SURE CRTU IS PROGRAMMED WITH CALIBRATION SETTINGS.

MEASURE NOMINAL VOLTAGE ON ANALOG INPUT MODULE BETWEEN 1 +30VIN AND 7 VINCOM

ANALOG AND AC INPUT MODULES MUST BE MOUNTED LESS THAN 12" FROM CRTU

UNIT INSTALLATION AND SETUP

R.R. SITE ID WHERE; SSSS = 4 CHARACTER SUBDIVISION ID. FILL WITH PRECEDING ZEROS AS REQUIRED. THE MAIN TRACK SUBDIVISION ID* IS IN THE CURRENT TIMETABLE. INDUSTRIAL LEADS, LEASED, AND LEAD TRACKS LISTED WITHIN THE SUBDIVISION MAY HAVE THEIR OWN UNIQUE SUBDIVISION ID*. ALWAYS REFER TO CURRENT PRINTED COPY OF THE TIMETABLE.
LLLLLLLL = 8 CHARACTERS USE DOT* AT CROSSINGS, AND
WDLLLLLL = USE 'WD' THEN MP* AT WAYSIDE LOCATIONS.
EXAMPLE = 0785WD1801.5UT
HBLLLLLL = USE 'HB' THEN MP* AT HBD SITES.
EXAMPLE = 0100-HB55.62TX
THE MP* MUST USE A DECIMAL POINT TO SEPARATE NUMBERS. FILL WITH PRECEDING DASHES AS REQUIRED.
AA = 2 CHARACTER STATE NAME FOR ALL LOCATIONS. MUST BE 14 CHARACTERS LONG, NO SPACES ALLOWED.

SITE IDENTIFIER: SSSSLLLLLLLLAA	0001-174937LIL
OPERATION TO RESUME: RUN	
SIGNAL STRENGTH dBm	-85dBm
CARRIER ID	00020
FIRMWARE VERSION	2.3.012
BOOT VERSION:	
CMM VERSION:	
SERIAL NUMBER	03-03100-2801
MIN ASSIGNMENT	
ESN: (MICROBURST ONLY)	
CONFIGURATION NET	MICROBURST
SILENCE INTERVAL	60 MINUTES
HEALTHCHECK INTERVAL	EVERY 2 DAYS
ALARM DEFER DELAY	240 MINUTES (4 HOURS)
SIGNAL STATUS	GOOD
SCADANET STATUS	GOOD
CALIBRATION CONSTANT CH1	
CALIBRATION CONSTANT CH2	000-09862
CALIBRATION CONSTANT CH3	000-09693
CALIBRATION CONSTANT CH4	13.01
CALIBRATION CONSTANT PS	15.35

FIELD PROVIDES: SAMPLED NOMINAL VOLTAGES, SCADANET STATUS CALIBRATION CONSTANTS, SERIAL NUMBER, AND SIGNAL STATUS.

CHANNEL SETUP - STANDARD CONFIGURATION 17:XR,HPv,Ba,Ba

CHANNEL NORMAL STATE	SENSE (NO/NC)	NAME FUNCTION	RECOGNITION DELAY SECONDS ACTIVE	RECOGNITION DELAY SECONDS NORMAL	RETURN TO NORMAL	REPORTING MODE	ALARM LINKED CHANNEL	ALARM LINKED CRITERIA	EVENT LOGGING ENABLED OPTIONS
POWER FAIL (CH5) ■	POWER FAIL DETECT NO	PF1n-PK AC POWER FAIL	7,200 ALARM	300 NORMAL	ENABLED	ALERT	DISABLED	N/A	ANALOG VALUE SENT
CH1 □	DIGITAL INPUT NO	CH1-XR XR DOWN TO LONG	1,800 ALARM	1 NORMAL	ENABLED	ALERT	DISABLED	N/A	
CH2 STORED NOMINAL VOLTAGE	ANALOG INPUT N/A	CH2-HP/V GATES NOT UP/DOWN LIGHT OUT BATTERY LOW	600 ALARM	1200 NORMAL	ENABLED	ALERT W/UPDATE	DISABLED	N/A	
CH3 STORED NOMINAL VOLTAGE	ANALOG INPUT N/A	CH3-Ba/V BATTERY MONITOR BATTERY LOW	600 ALARM	1200 NORMAL	ENABLED	ALERT W/UPDATE	DISABLED	N/A	DIGITAL EVENTS
CH4 STORED NOMINAL VOLTAGE	ANALOG INPUT N/A	CH4-Ba/V BATTERY MONITOR BATTERY LOW	600 ALARM	1200 NORMAL	ENABLED	ALERT W/UPDATE	DISABLED	N/A	PF1n-PK CH1-XR
POWER SOURCE (CH6)	ANALOG INPUT N/A	PS-Ba/V BATTERY MONITOR BATTERY LOW	600 ALARM	1200 NORMAL	ENABLED	ALERT W/UPDATE	DISABLED	N/A	

ANALOG CHANNEL	USEFUL RANGE VOLTS LOW	USEFUL RANGE VOLTS HIGH	DISPLAYED RANGE VOLTS LOW	DISPLAYED RANGE VOLTS HIGH	RELATIVE ALARM POINT LOW	RELATIVE ALARM POINT HIGH	ABSOLUTE ALARM POINT LOW	ABSOLUTE ALARM POINT HIGH	AUTOMATIC UPDATE INTERVAL	STORED NOMINAL VOLTAGE	SAMPLED NOMINAL VOLTAGE
CH2	0.0	30.00	0.0	30.00	81%	120%	10.0	29.0	14 DAYS	12.69	
CH3	0.0	30.00	0.0	30.00	81%	120%	10.0	29.0	14 DAYS	12.69	
CH4	0.0	30.00	0.0	30.00	81%	120%	10.0	29.0	14 DAYS	12.69	
POWER SOURCE	0.0	30.00	0.0	30.00	81%	120%	10.0	29.0	14 DAYS	12.69	
RELAY OUTPUT	NAME RLY-OUT		ACTIVE SET-UP-OPEN		NORMAL CLR-DN-CLOSE		PULSE DURATION		15 SECONDS	StdCfg Ver: 2.3.3 REV'D 9-20-02	

MAINTENANCE OPERATIONS

TO START OR ABORT ANY PROCEDURE

1. PRESS THE 'CANCEL' BUTTON FIRST

WHEN RESPONDING TO A CALL, PUT THE CRTU IN THE 'SILENCE ALARMS' MODE

1. PRESS 'SELECT' AND THEN '+ ARROW' BUTTON UNTIL
   DISPLAY: ACTION?
   SILENCE ALARMS
2. PRESS THE 'SELECT' BUTTON TWICE
3. CORRECT PROBLEM AND SIMULATE NORMAL TRAIN MOVEMENT THROUGH THE LOCATION
4. EXAMINE EACH CHANNEL ON THE CRTU
5. PRESS THE '+/- ARROW' BUTTON
   VERIFY ALL CHANNELS INDICATE A NORMAL STATE
NORMAL STATES ARE ON THE CHANNEL SETUP CHART

CLEAR TIMERS, LATCHES AND SEND ALL NORMAL

1. DO STEPS #1 - #5 ABOVE, AND PRESS 'CANCEL'.
2. PRESS 'SELECT' AND THEN '- ARROW' BUTTON UNTIL
   DISPLAY: ACTION?
   SERVICE MODE
3. PRESS 'SELECT' AGAIN TO RESET TIMERS, AND IF
   DISPLAY: SERVICE MODE
   ALL NORMAL
4. PRESS 'SELECT' AGAIN TO CLEAR LATCHES, AND SEND ALL NORMAL. SKIP STEPS #5-#6.
5. HOWEVER, IF ALARMS ARE NOT CLEARED;
   DISPLAY: SERVICE MODE
   ALARMS PENDING/PRESENT
6. PRESS 'CANCEL', CORRECT PROBLEM AND REPEAT STEPS #2 THRU #5 UNTIL ALL NORMAL SENT.

TO CANCEL THE 'SILENCE ALARMS' MODE

1. PRESS 'SELECT' AND THEN '+ ARROW' BUTTON UNTIL
   DISPLAY: ACTION?
   CANCEL SILENCE
2. PRESS THE 'SELECT' BUTTON AGAIN

EXAMINE & SET BATTERY VOLTAGE NOMINAL VALUE

1. PRESS THE '+ ARROW' OR '- ARROW' BUTTON UNTIL THE DESIRED CHANNEL IS DISPLAYED.
   DISPLAY: PS-Ba:
   13.83V NORMAL
2. VERIFY THE DISPLAYED READING WITH A DIGITAL VOLTMETER
3. PRESS THE 'SELECT' BUTTON, AND THE CRTU DISPLAY WILL SWITCH BETWEEN CURRENT/SAVED NOMINAL VOLTAGE VALUES.
   DISPLAY: NOMINAL ON #6? (CURRENT)
   13.83
   DISPLAY: SAVED NOMINAL 6 (STORED)
   12.69
4. PRESS THE 'SELECT' BUTTON AND THE CURRENT OR 'NOMINAL ON' VALUE WILL BE SAMPLED AND STORED AS THE 'SAVED NOMINAL' VALUE
5. VERIFY THE 'NOMINAL ON' AND 'SAVED NOMINAL' VALUES ARE EQUIVALENT, REPEAT STEPS #1 THRU #3 & PRESS THE 'CANCEL' BUTTON.

VILLA PARK, ILLINOIS
ARDMORE AVENUE
M.P. 17.71
GENEVA SUBDIVISION
D.O.T.#174 937L

REV. 9-25-08 INSTALLED LED'S & CHANGED BS14 TO BS12. REC. #15469 4-13-07 AMH/WITT	3 REV. 09-26-07 M.P.'S CHANGED ON CROSSINGS PER AC. M.P. 10.50 - M.P. 27.54 REC. #14590 06-07-07 JJO/NST/ /	REV. 6-23-04 REPLACED HXP-1 WITH HXP-3. REC. #11848 5-9-03 TAH/WITT	REV. 7-2-03 INSTALLED CRTU. REC. #11779 I.S. 5-23-03 JJO/WITT/WITT/EML	MODIFICATION LEVEL Q.A. LAST LEVEL CHK'D. LAST LEVEL MOD. THIS TYP. LAST LEVEL BY DESIGNER. CHANGED FROM TYP.? Y/N	UNION PACIFIC QUALITY PRODUCTIVITY SAFETY SIGNAL DESIGN	DES: WITT IND DIG: WITT IND CHK: EML A.F.E. 3327 ID= GEN1771.4X

UNION PACIFIC RAILROAD
CHICAGO, ILLINOIS TO
CLINTON, IOWA
C.T.C. CIRCUITS
Office of Sr.AVP Engineering - Signal/TCO OMAHA NEBR.

DATE 11-01-01
SHEET 4
DWG 17.71
GEN