Form 3

ORIGINAL

(File original and two duplicates)

STATE OF ILLINOIS

ILLINOIS COMMERCE COMMISSION

Petition for permission to make a major change in crossing protection, or to install new protection under 92 Illinois Administrative Code 1535.400 (d)

X-12860

T09-0038

Date: FEBRUARY 17, 2009

To the Illinois Commerce Commission:

The petitioner UNION PACIFIC 1739984 shows
(name of railroad company)

(1) That it is a railroad company operating a line of railroad in the State of Illinois.

(2) That petitioner proposes and hereby makes application for authority to make a major change in crossing protection, or to install new protection, under 92 Illinois Administrative Code 1535.400 (d) adopted by this Commission.

(3) That the location of the crossing, the nature of protection now established and proposed to be established, and other pertinent facts in connection therewith, are set forth in the statement attached to and forming part of this petition.

(4) That petitioner's reasons and purpose, with reference to its said proposal are

IMPROVE PEDESTRIAN SAFETY AT CROSSINGS ADJACENT TO PASSENGER STATIONS BY INSTALLING PLATFORM DIVERSIONS AND ADDITIONAL PEDESTRIAN CROSSING GATES, COMPLEMENTED BY A "SECOND TRAIN APPROACHING" SYSTEM.

(State reasons and purpose)

(5) That the facts set forth in this petition and in the statement and plans or plats attached thereto, are, all of them, true and correct to the best of petitioner's knowledge and belief.

WHEREFORE, the petitioner prays that the Commission will, if deemed desirable by the Commission, set the aforesaid matter for hearing, and that the Commission enter an order or adopt a resolution consenting to and granting authority for the making of the said proposed changes in or additions to crossing protection.

UNION PACIFIC RAILROAD
(Railroad Company)

By Thomas R. Chudryuk

(Attorney for Petitioner)

(Attorney's Address)

DOCKETED

MAR 18 2009

ORIGINAL

Statement, attached to and part of an application for permission to make a major change in crossing protection or to install new protection, under 92 Ill. Adm. Code 1535.400 (d).

1. Name of Railroad Company UNION PACIFIC RAILROAD

2. Crossing Number 173998 Y
(Separate statement should be filed for each crossing)

3. Village or City MAYWOOD
(in or near)

4. Name of Street or Highway 5TH AVE.

5. Public Agency Maintaining Highway
(D.O.T., County, Township, City)

6. Protection now established: (Give full description. Indicate the hours of any manual protection.)
CANTILEVER WITH FLG

7. Protection desired: (Give details) ADDITION OF PEDESTRIAN GATES

8. Number of main tracks 2 Other tracks Ø

9. Number of passenger train movements: 6 a.m. to 6 p.m. 44 6 p.m. to 6 a.m. 16

10. Number of freight train movements: 6 a.m. to 6 p.m. 15 6 p.m. to 6 a.m. 15

11. Approximate number of switch movements: 6 a.m. to 6 p.m. 1 6 p.m. to 6 a.m. 3

12. Maximum speed of trains at crossing on each track in each direction 70 MPH

13. Passenger platforms served by tracks within the limits of track circuits, if any MAYWOOD STATION

14. Where automatic signals or gates are proposed, approximate number of train or engine movements daily which would cause false indications or operation
N/A

15. Nature and approximate amount of street or highway traffic over crossing 6600 AADT

16. In addition to the information listed hereinbefore in Form 3, attach a track plan or plat of the proposed crossing. This plan should show:

(a) Width and surface of highway.
(b) Highway intersections (including private driveways to be so indicated) and location of established highway signs or signals within 100 feet of crossing.
(c) Location of tracks, switches and other railroad facilities such as block signals, etc. within limits of track circuits, present and/or proposed.
(d) Where automatic protection is proposed, show proposed location of signals (side lights, cantilevers, etc., if any).
(e) Show the length of each operating track section within the control limits of the crossing protection and its function.

ADDITIONAL INFORMATION

SEE CIRCUIT PLANS

VERIFICATION

I, THOMAS N. ANDRYUK, first being duly sworn upon oath depose and say that I am MANAGER of FIELD ENGINEERING of UNION PACIFIC RAILROAD, an DELAWARE corporation; that I have read the above and foregoing petition by me subscribed and know the contents thereof; that said contents are true in substance and in fact, except as to those matters stated upon information and belief, and as to those, I believe same to be true.

UNION PACIFIC RAILROAD

Thomas N. Andryuk

Subscribed and sworn to before me this _____ day of _____ 19____.

Notary Public, Illinois.

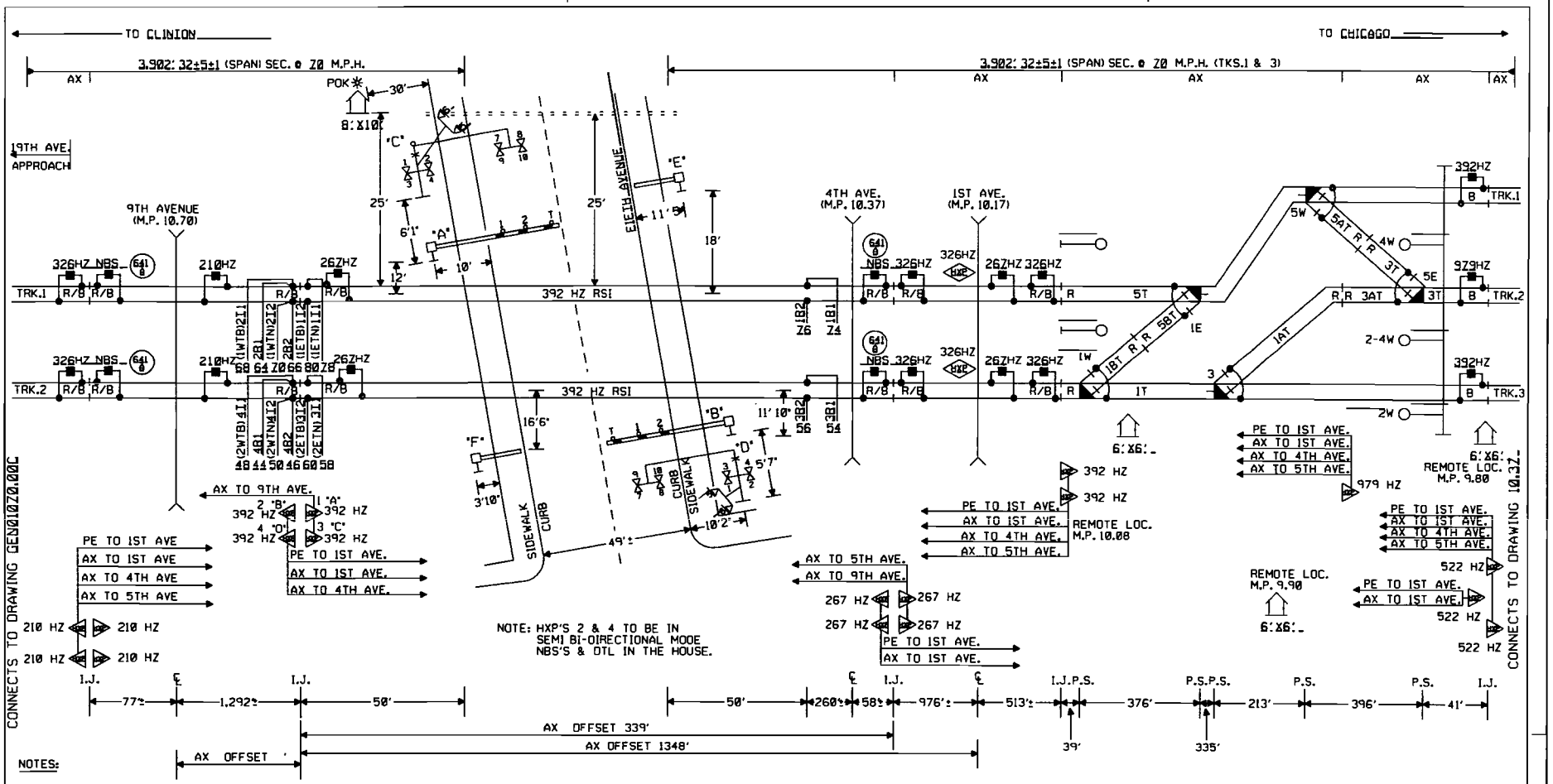

NOTES:

⊗ = TWISTED WIRES INSULATED 1 TWIST PER FT. ALL TRACK WIRES 2C. #6

TRANSMITTER AND RECEIVER LEADS TO BE SEPARATED BY AT LEAST 12" IN TRENCH. LENGTHS SHOULD NOT EXCEED MANUFACTURES RECOMMENDATION.

TOP OF FOUNDATION TO BE AT SAME ELEVATION AS THE SURFACE OF THE TRAVELED WAY & NO MORE THAN 4" ABOVE THE SURFACE OF THE GROUND.

ALL BUNGALOW WIRING TO BE #16 AWG FLEX UNLESS OTHERWISE SPECIFIED EXCEPT ALL GROUND WIRE TO BE #6 AWG FLEX OR LARGER.

ALL WIRING IN GATE MECHANISM TO BE #10 AWG FLEX.

REFER TO UP STANDARD DWG FOR BUNGALOW GROUNDING.

DO NOT USE 7 CELLS OF B12 BATTERY UNLESS REQUIRED TO MAINTAIN MINIMUM LAMP VOLTAGE.

ALL LIGHTS TO BE 12" ROUNDELS.

= = = = = = 4" X ___' CONDUIT

LIGHTS: C & O 1,2 30"/15"
C & O 3,4,5,6 70"
C & O 7,8,9,10 20"/32"

GATE A: _
GATE B: _
CANT C: _
CANT D: _
GATE E: _
GATE F: _

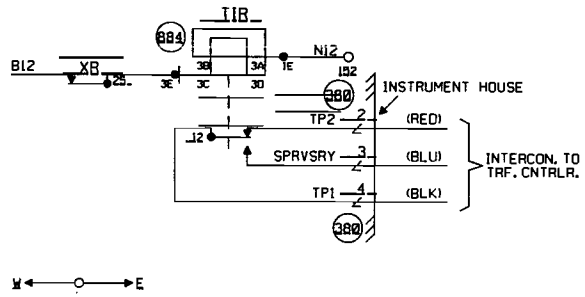

MAYWOOD, ILLINOIS
EIGTH AVENUE
M.P. 10.50
GENEVA SUBDIVISION
O.O.T.#173_998Y

OLD M.P. = 10.43

5 REV. 05-26-07 M.P.'S CHANGED ON CROSSINGS PER AC. M.P. 10.50 - M.P. 27.54 REC. #14598 06-07-07 JJO/NSI/	REV. 12-29-06 INSTALLED 3-WIRE TRAFFIC CONTROL CIRCUIT. REC. #14320 12-05-06 TAH/WITT	REV. 12-21-04 REVISED EREQ FOR 1ST AVE. M.P. 10.17 REC #11973 9-30-04 HM/WIII	REV. 5-20-03 INSTALLED 25 SECONDS ADV. PREEMPTION AT M.P. 10.17 W.O. #39659 REC. #9213 4-10-03 JTB JJO/WITT/GEHH/JNM	1 REV. 2-12-01 HXP AND E.C. UPGRADE PROJECT M.P. 10.00 - 10.50 W.O. 33814 10-15-00 JJE CJB/NSI/HGB/JNM	MODIFICATION LEVEL: O.A. LAST LEVEL CHK'D. CI; LAST LEVEL MOD. THIS TYP. CK; LAST LEVEL BY DESIGNER. CI; CHANGED FROM TYP.? Y/N Y	UNION PACIFIC SAFETY SIGNAL DESIGN

DES: HGBMON
DTG: HGBMON
CHK: JJE
A.F.E. 33814
ID: GEN1050.1X
OFFICE OF CHIEF ENG'R OMAHA NEBR.

UNION PACIFIC RAILROAD
CHICAGO, ILLINOIS TO
CLINTON, IOWA
C.I.C. CIRCUITS

DATE 07-22-99
SHEET 1
DWG 10.50
GEN

(REV. 6-1-98) (1KBGC.1)

OLD ID = GEN1043.1

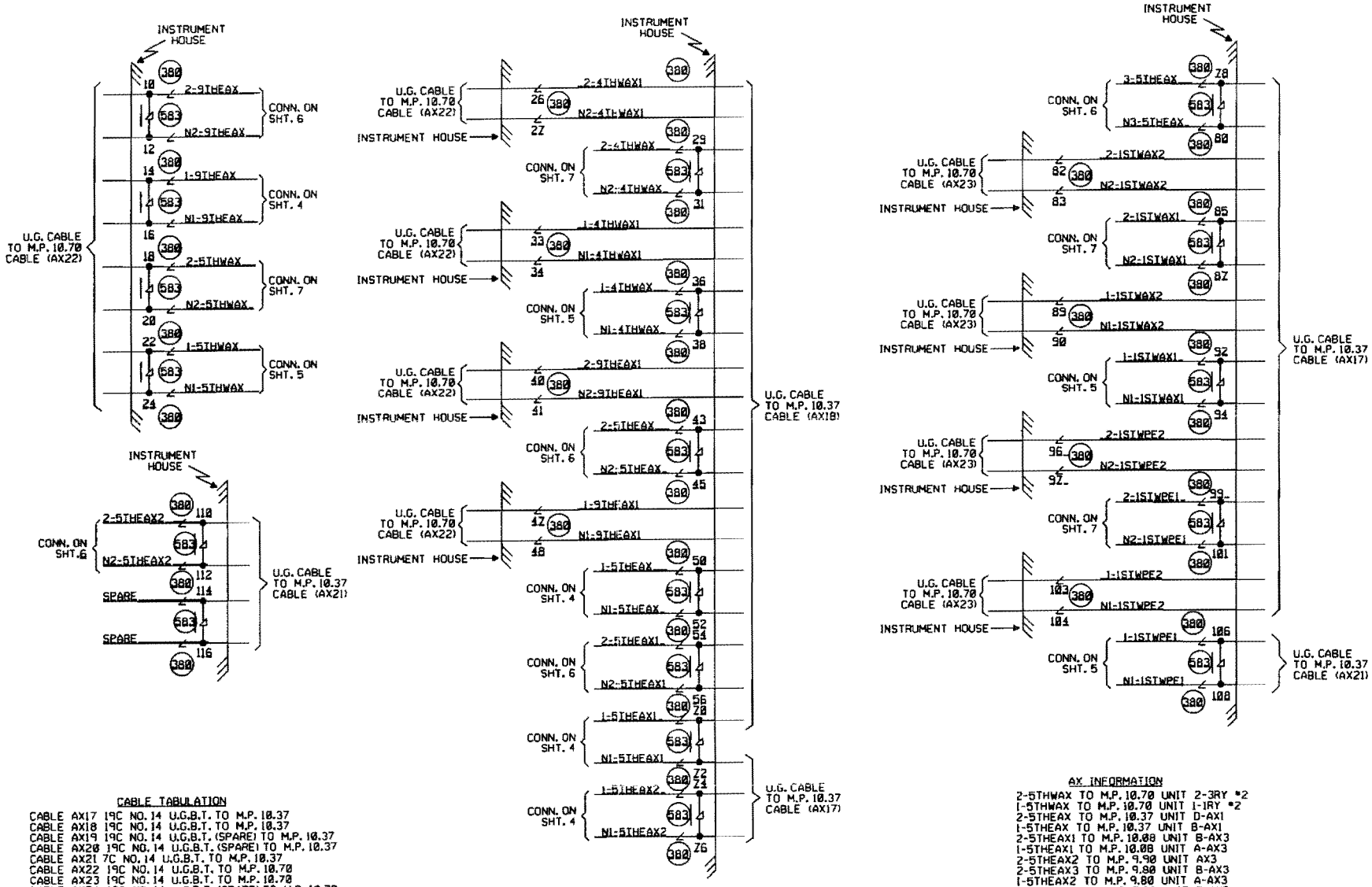

CABLE TABULATION

CABLE AX17 19C NO.14 U.G.B.T. TO M.P. 10.37
CABLE AX18 19C NO.14 U.G.B.T. TO M.P. 10.37
CABLE AX19 19C NO.14 U.G.B.T. (SPARE) TO M.P. 10.37
CABLE AX20 19C NO.14 U.G.B.T. (SPARE) TO M.P. 10.37
CABLE AX21 7C NO.14 U.G.B.T. TO M.P. 10.37
CABLE AX22 19C NO.14 U.G.B.T. TO M.P. 10.70
CABLE AX23 19C NO.14 U.G.B.T. TO M.P. 10.70
CABLE AX24 19C NO.14 U.G.B.T. (SPARE) TO M.P. 10.70

AX INFORMATION

2-5THWAX TO M.P. 10.70 UNIT 2-3RY *2
1-5THWAX TO M.P. 10.70 UNIT 1-1RY *2
2-5THEAX TO M.P. 10.37 UNIT D-AX1
1-5THEAX TO M.P. 10.37 UNIT B-AX1
2-5THEAX1 TO M.P. 10.08 UNIT B-AX3
1-5THEAX1 TO M.P. 10.08 UNIT A-AX3
2-5THEAX2 TO M.P. 9.90 UNIT AX3
2-5THEAX3 TO M.P. 9.80 UNIT B-AX3
1-5THEAX2 TO M.P. 9.80 UNIT A-AX3
2-5THEAX3 TO M.P. 9.80 UNIT B-AX3

MAYWOOD, ILLINOIS
FIFTH AVENUE
M.P. 10.50
GENEVA SUBDIVISION
D.O.T. #173 998Y
PROJ.#

OLD M.P. = 10.43

3 REV. 09-26-02 M.P.'S CHANGED ON CROSSINGS PER AC. M.P. 10.50 - M.P. 27.54 REC. #14590 06-07-07 JJO/NST/	REV. 5-20-03 INSTALLED 25 SECONDS ADV. PREEMPTION AT M.P. 10.17 W.O. #34654 REC. #9213 4-10-03 JTB JJO/WITT/GEHH/JNM
1 REV. 2-12-01 HXP AND E.C. UPGRADE PROJECT M.P. 10.00 - 10.50 W.O. 33814 10-15-00 JJF CJB/NST/HAR/JNM	

MODIFICATION LEVEL	
O.A. LAST LEVEL CHK'D.	CO
LAST LEVEL MOD. THIS TYP.	CK
LAST LEVEL BY DESIGNER.	CI
CHANGED FROM TYP.? Y/N	Y

UNION PACIFIC SAFETY QUALITY PRODUCTIVITY SIGNAL DESIGN

DES: HARMON
DIG: HARMON
CHK: JJE
A.F.E. 33814
ID: GEN1050.10X

UNION PACIFIC RAILROAD
CHICAGO, ILLINOIS TO
CLINTON, IOWA
C.I.C. CIRCUITS
OFFICE OF CHIEF ENG'R OMAHA NEBR.

DATE 07-22-99
SHEET 10
DWG 10.50
GEN

(REV. 6-1-98) (CIRCUIT.TYP_) OLD ID = GEN1043.10

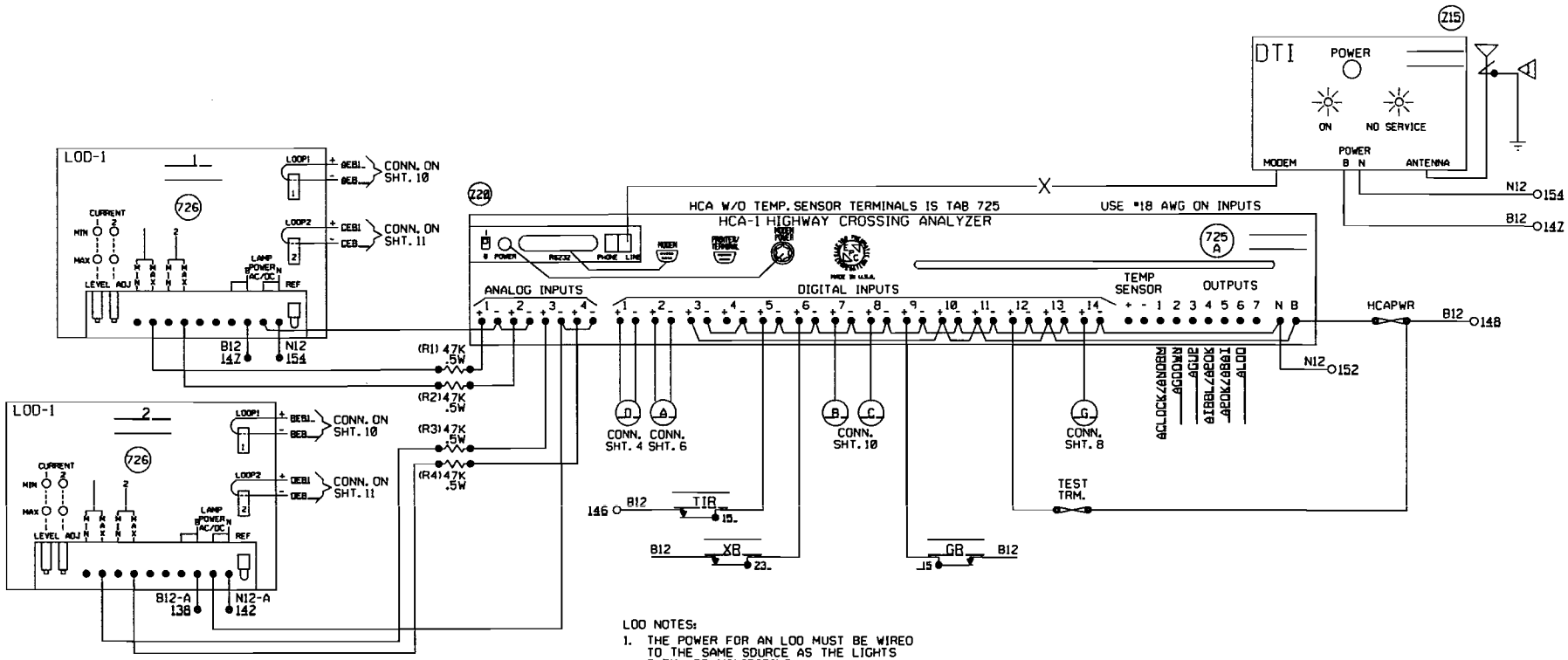

LOD NOTES:

1. THE POWER FOR AN LOD MUST BE WIRED TO THE SAME SOURCE AS THE LIGHTS THEY ARE MONITORING.
2. ONE REFERENCE VOLTAGE PER LOD PER HCA ANALOG INPUT.
3. TWO LOD'S OR FOUR LOD OUTPUTS PER HCA ANALOG INPUT.
4. ONE LOD OUTPUT PER FOUR ANALOG INPUTS.
5. A RESISTOR MUST ALWAYS BE INSTALLED IN SERIES BETWEEN THE LOD OUTPUTS AND THE HCA ANALOG INPUTS.
6. THE NUMBER OF UNIQUE REFERENCE VOLTAGES IS DETERMINED BY THE NUMBER OF UNIQUE BATTERY BANKS AND/OR LIGHTING TRANSFORMERS.

HCA NOTES:

1. CPU BOARD REV LEVEL "F" OR HIGHER.
2. SOFTWARE REV LEVEL "UP1-NC" OR GREATER ON IC13.
3. DIP SWITCH #1: ON, ON, ON, OFF, ON, ON, OFF, OFF.
4. DIP SWITCH #2: OFF, OFF, OFF, OFF, OFF, OFF, OFF, OFF.
5. JUMPER ALL UNUSED DIGITAL "+" INPUTS TO THE B TERMINAL.
6. JUMPER ALL UNUSED DIGITAL "-" INPUTS TO THE N TERMINAL.
7. THE ANALOG AND DIGITAL INPUT ASSIGNMENT MUST BE MARKED ON THE HCA SHEET.
8. DO NOT JUMPER INPUTS WITH DIFFERENT VOLTAGE REFERENCES TOGETHER.
9. REFER TO "FIELD INSTRUCTIONS FOR INSTALLATION AND OPERATION OF HIGHWAY CROSSING ANALYZERS" FOR EQUIPMENT SETUP.

DTI NOTE:
POLYPHASER #IS-50UX-C2
GROUND TO BUSS ON "A" WALL

5ISLDTI

ANALOG #1: 1 _LOD
ANALOG #2: 2 _LOD
ANALOG #3: 3 _LOD
ANALOG #4: 4 _LOD

DIGITAL #1: ISLAND - 1
DIGITAL #2: ISLAND - 2
DIGITAL #3: ISLAND - 3
DIGITAL #4: ISLAND - 4
DIGITAL #5: ISLAND - 5
DIGITAL #6: XR
DIGITAL #7: GATE DOWN A
DIGITAL #8: GATE DOWN B
DIGITAL #9: GP
DIGITAL #10: ISLAND ONLY
DIGITAL #11: FOREIGN XR
DIGITAL #12: TEST
DIGITAL #13: TROUBLE
DIGITAL #14: POR

—X— = DISCONNECT

MAYWOOD, ILLINOIS
EIGHTH AVENUE
M.P. 10.50
GENEVA SUBDIVISION
O.D.I. #173 998Y
PROJ.#

OLD M.P. = 10.43

3 REV. 09-26-02 W.O.'S CHANGED ON CROSSINGS PER AC. W.O. 10.50 - W.O. 27.54 REC. #14590 06-07-02 JJO/NSI/	REV. 5-20-03 INSTALLED CATU AT M.P. 10.50 W.O. #3327 REC. #9213 4-10-03 JJO/WITT/WITT/EML	1 REV. 2-12-01 HXP AND E.C. UPGRADE PROJECT M.P. 10.00 - 10.50 W.O.33814 10-15-00 JJF CJB/NST/HAR/JNM	MODIFICATION LEVEL		UNION PACIFIC QUALITY PRODUCTIVITY SAFETY SIGNAL DESIGN	DES: WOBWON DIG: WOBWON CHK: JJE A.F.E. 33814 ID: GEN1050.2X	UNION PACIFIC RAILROAD CHICAGO, ILLINOIS IO CLINTON, IOWA C.I.C. CIRCUITS OFFICE OF CHIEF ENG'R OMAHA NEBR.	DATE 02:22:99 SHEET 2 DWG 10.50 GEN	
			O.A. LAST LEVEL CHK'D.	CO					
			LAST LEVEL MOD. THIS TYP.	CK					
			LAST LEVEL BY DESIGNER.	CI					
			CHANGED FROM TYP.? Y/N	Y					

(REV. 6:1:98) (BEMOIE.2)

OLD ID = GEN1043.2

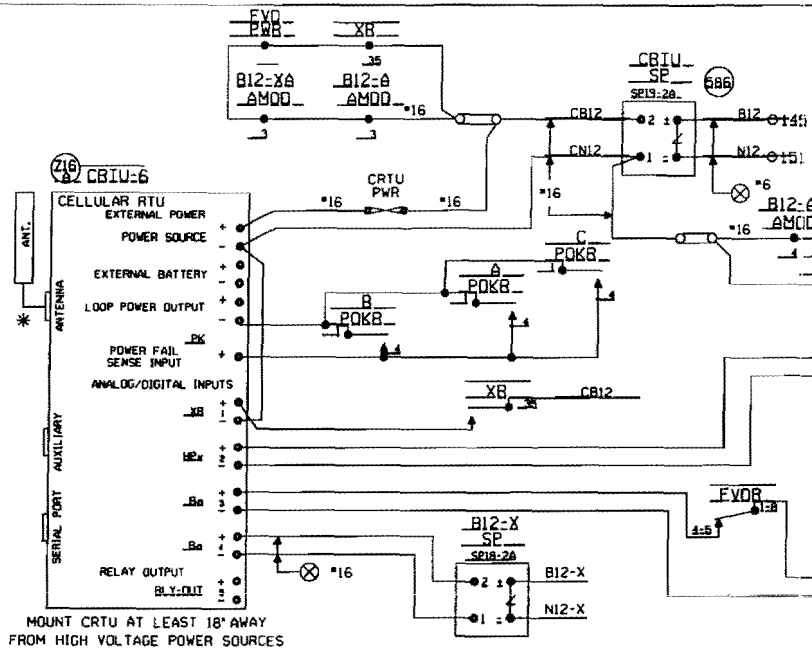

ANALOG MODULES CONVERT DC VOLTAGE TO A SQUARE WAVE. A WORKING ANALOG MODULE WILL HAVE 4.5VDC TO 8.0VDC BETWEEN 5VOUT+ AND 6VOUT-. WHERE, 0VOLTS = 0HZ OUT, 30VOLTS = 10KHZ OUT, AND 15VOLTS = 5KHZ OUT
MAKE SURE CRTU IS PROGRAMMED WITH CALIBRATION SETTINGS.

MEASURE NOMINAL VOLTAGE ON ANALOG INPUT MODULE BETWEEN 1 +30VIN AND 7 VINCOM

ANALOG AND AC INPUT MODULES MUST BE MOUNTED LESS THAN 12" FROM CRTU

NOTES:
ALL DIODES IN5060 OR IN4004 UNLESS OTHERWISE NOTED.
✱ MOUNT ANTENNA ON TOP OF HOUSE.
ALL WIRES #18 UNLESS OTHERWISE NOTED.
ALL UNUSED 'NC' INPUTS MUST BE TIED HIGH TO BATTERY
ALL UNUSED ANALOG INPUTS MUST BE TIED HIGH TO BATTERY
ALL UNUSED 'NO' INPUTS MUST BE DISCONNECTED

CRTU FRONT PANEL DISPLAY CHART INDICATES NORMAL STATE
DIGITAL INPUT HIGH, OR POWER FAIL INPUT CLOSED
DIGITAL INPUT LOW, OR POWER FAIL INPUT OPEN

NORMAL STATE FOR ANALOG CHANNELS IS EQUAL TO THE STORED NOMINAL VOLTAGE +120% OR -81%

LATCH IS SET BECAUSE CRTU DETECTED AN ALARM CONDITION

12.06V L

'sRUN MODE' 'sRUN MODE-SILENT'

CRTU RADIO IS DISABLED. REPROGRAM CRTU WITH LAPTOP.

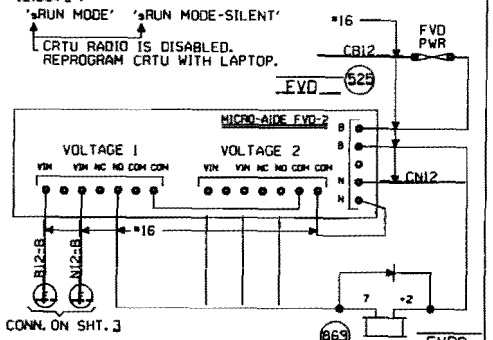

UNIT INSTALLATION AND SETUP

R.R. SITE ID WHERE: SSSS = 4 CHARACTER SUBDIVISION ID. FILL WITH PRECEDING ZEROS AS REQUIRED. THE MAIN TRACK SUBDIVISION ID* IS IN THE CURRENT TIMETABLE. INDUSTRIAL LEADS, LEASED, AND LEAD TRACKS LISTED WITHIN THE SUBDIVISION MAY HAVE THEIR OWN UNIQUE SUBDIVISION ID*. ALWAYS REFER TO CURRENT PRINTED COPY OF THE TIMETABLE.
LLLLLLLL = 8 CHARACTERS USE DOT* AT CROSSINGS, AND
WOLLLLLL = USE 'WO' THEN MP* AT WAYSIDE LOCATIONS.
EXAMPLE = 0785WO1801.5UT
HBLLLLLL = USE 'HB' THEN MP* AT HBD SITES.
EXAMPLE = 0100-H055.62TX
THE MP* MUST USE A DECIMAL POINT TO SEPARATE NUMBERS. FILL WITH PRECEDING DASHES AS REQUIRED.
AA = 2 CHARACTER STATE NAME FOR ALL LOCATIONS.
MUST BE 14 CHARACTERS LONG, NO SPACES ALLOWED.

SITE IDENTIFIER SSSSLLLLLLLLAA	0001-173998YIL
OPERATION TO RESUME:	RUN
SIGNAL STRENGTH dBm	88
CARRIER ID	00020
FIRMWARE VERSION	2.3.12
BOOT VERSION:	
CMM VERSION:	
SERIAL NUMBER	03-03243-2801-00
MIN ASSIGNMENT	
ESN: (MICROBURST ONLY)	
CONFIGURATION NET	MICROBURST
SILENCE INTERVAL	60 MINUTES
HEALTHCHECK INTERVAL	EVERY 2 DAYS
ALARM DEFER DELAY	240 MINUTES (4 HOURS)
SIGNAL STATUS	GOOD
SCADANET STATUS	GOOD
CALIBRATION CONSTANT CH1	
CALIBRATION CONSTANT CH2	000-10181
CALIBRATION CONSTANT CH3	000-09642
CALIBRATION CONSTANT CH4	000-9878
CALIBRATION CONSTANT PS	000-9751

FIELD PROVIDES: SAMPLED NOMINAL VOLTAGES, SCADANET STATUS CALIBRATION CONSTANTS, SERIAL NUMBER, AND SIGNAL STATUS.

CHANNEL SETUP - STANDARD CONFIGURATION 1Z:XB,HPx,Ba,Ba__

CHANNEL NORMAL STATE	SENSE (NO/NC)	NAME FUNCTION	RECOGNITION DELAY SECONDS ACTIVE	RECOGNITION DELAY SECONDS NORMAL	RETURN TO NORMAL	REPORTING MODE	ALARM LINKED CHANNEL	ALARM LINKED CRITERIA	EVENT LOGGING ENABLED OPTIONS
POWER FAIL (CH5)	POWER FAIL DETECT NO	PFin-PK AC POWER FAIL	7,200 ALARM	300 NORMAL	ENABLED	ALERT	DISABLED	N/A	ANALOG VALUE SENT
CH1	DIGITAL INPUT NO	CH1-XR XR DOWN TO LONG	1,800 ALARM	1 NORMAL	ENABLED	ALERT	DISABLED	N/A	
CH2 STORED NOMINAL VOLTAGE	ANALOG INPUT N/A	CH2-HP/V GATES NOT UP/DOWN LIGHT OUT BATTERY LOW	600 ALARM	1200 NORMAL	ENABLED	ALERT W/UPDATE	DISABLED	N/A	
CH3 STORED NOMINAL VOLTAGE	ANALOG INPUT N/A	CH3-Ba/V BATTERY MONITOR BATTERY LOW	600 ALARM	1200 NORMAL	ENABLED	ALERT W/UPDATE	DISABLED	N/A	DIGITAL EVENTS
CH4 STORED NOMINAL VOLTAGE	ANALOG INPUT N/A	CH4-Ba/V BATTERY MONITOR BATTERY LOW	600 ALARM	1200 NORMAL	ENABLED	ALERT W/UPDATE	DISABLED	N/A	PFin-PK CH1-XR
POWER SOURCE (CH6)	ANALOG INPUT N/A	PS-Ba/V BATTERY MONITOR BATTERY LOW	600 ALARM	1200 NORMAL	ENABLED	ALERT W/UPDATE	DISABLED	N/A	

ANALOG CHANNEL	USEFUL RANGE VOLTS LOW	USEFUL RANGE VOLTS HIGH	DISPLAYED RANGE VOLTS LOW	DISPLAYED RANGE VOLTS HIGH	RELATIVE ALARM POINT LOW	RELATIVE ALARM POINT HIGH	ABSOLUTE ALARM POINT LOW	ABSOLUTE ALARM POINT HIGH	AUTOMATIC UPDATE INTERVAL	STORED NOMINAL VOLTAGE	SAMPLED NOMINAL VOLTAGE
CH2	0.0	30.00	0.0	30.00	81%	120%	10.0	29.0	14 DAYS	15.81	
CH3	0.0	30.00	0.0	30.00	81%	120%	10.0	29.0	14 DAYS	13.65	
CH4	0.0	30.00	0.0	30.00	81%	120%	10.0	29.0	14 DAYS	13.64	
POWER SOURCE	0.0	30.00	0.0	30.00	81%	120%	10.0	29.0	14 DAYS	15.45	

RELAY OUTPUT	NAME	ACTIVE	NORMAL	PULSE DURATION	STORED NOMINAL VOLTAGE
	RLY-OUT	SET-UP-OPEN	CLR-ON-CLOSE	15 SECONDS	StdCfg Ver: 2.3.3 REV'D 9-20-02

MAINTENANCE OPERATIONS

TO START OR ABORT ANY PROCEDURE
1. PRESS THE 'CANCEL' BUTTON FIRST

WHEN RESPONDING TO A CALL, PUT THE CRTU IN THE 'SILENCE ALARMS' MODE
1. PRESS 'SELECT' AND THEN '+ ARROW' BUTTON UNTIL
   DISPLAY: ACTION?
   SILENCE ALARMS
2. PRESS THE 'SELECT' BUTTON TWICE
3. CORRECT PROBLEM AND SIMULATE NORMAL TRAIN MOVEMENT THROUGH THE LOCATION
4. EXAMINE EACH CHANNEL ON THE CRTU
5. PRESS THE '+/- ARROW' BUTTON
   VERIFY ALL CHANNELS INDICATE A NORMAL STATE
   NORMAL STATES ARE ON THE CHANNEL SETUP CHART

CLEAR TIMERS, LATCHES AND SEND ALL NORMAL
1. DO STEPS #1 - #5 ABOVE, AND PRESS 'CANCEL'.
2. PRESS 'SELECT' AND THEN '- ARROW' BUTTON UNTIL
   DISPLAY: ACTION?
   SERVICE MODE
3. PRESS 'SELECT' AGAIN TO RESET TIMERS, AND IF
   DISPLAY: SERVICE MODE
   ALL NORMAL
4. PRESS 'SELECT' AGAIN TO CLEAR LATCHES, AND SEND ALL NORMAL. SKIP STEPS #5-#6.
5. HOWEVER, IF ALARMS ARE NOT CLEARED:
   DISPLAY: SERVICE MODE
   ALARMS PENDING/PRESENT
6. PRESS 'CANCEL', CORRECT PROBLEM AND REPEAT STEPS #2 THRU #5 UNTIL ALL NORMAL SENT.

TO CANCEL THE 'SILENCE ALARMS' MODE
1. PRESS 'SELECT' AND THEN '+ ARROW' BUTTON UNTIL
   DISPLAY: ACTION?
   CANCEL SILENCE
2. PRESS THE 'SELECT' BUTTON AGAIN

EXAMINE & SET BATTERY VOLTAGE NOMINAL VALUE
1. PRESS THE '+ ARROW' OR '- ARROW' BUTTON UNTIL THE DESIRED CHANNEL IS DISPLAYED.
   DISPLAY: PS-Ba
   13.83V NORMAL
2. VERIFY THE DISPLAYED READING WITH A DIGITAL VOLTMETER
3. PRESS THE 'SELECT' BUTTON, AND THE CRTU DISPLAY WILL SWITCH BETWEEN CURRENT/SAVED NOMINAL VOLTAGE VALUES.
   DISPLAY: NOMINAL ON #67 (CURRENT)
   13.83
   DISPLAY: SAVED NOMINAL 6 (STORED)
   12.69
4. PRESS THE 'SELECT' BUTTON AND THE CURRENT OR 'NOMINAL ON' VALUE WILL BE SAMPLED AND STORED AS THE 'SAVED NOMINAL' VALUE
5. VERIFY THE 'NOMINAL ON' AND 'SAVED NOMINAL' VALUES ARE EQUIVALENT, REPEAT STEPS #1 THRU #3 & PRESS THE 'CANCEL' BUTTON.

SETUP FVD-2 REMOVE COVER PLATE
VERIFY FVD-2 DIP SWITCH SETTINGS

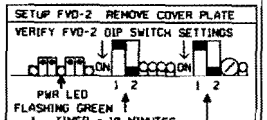

CHECK BATTERY ON B/N TERMINALS
CHECK FUSE. IF NOT FLASHING SEND IN FOR REPAIR & RETURN.

SETUP VOLTAGE ALARM LIMITS
1. MEASURE BATTERY VOLTAGE AT VIN
2. CONNECT DVM POSITIVE LEAD TO RED TEST POINT (+TP).
3. CONNECT DVM NEGATIVE LEAD TO GREEN TEST POINT (COMMON TP).
4. ADJUST THE POT UNTIL IT READS 1/10TH THE ALARM LIMIT VALUE.
   WHERE 11.5V = 1.15V ON DVM
   SET HIGH = 120% OR 2-3V ABOVE VIN
   SET LOW = 81% OR 1-2V BELOW VIN
5. ADJUST BOTH LOW/HIGH ALARM LIMITS. REPEAT FOR EACH DETECTOR.
6. OPERATE RESET TO RESTORE FVD-2 TO NORMAL, NON-FAILURE STATE.

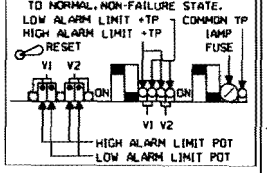

MAYWOOD, ILLINOIS
EIGHTH AVENUE
M.P. 10.50
GENEVA SUBDIVISION
D.O.T.* 173.998Y
PROJ.*

OLD M.P. = 10.43

2 REV. 09-26-07 W.P.'S CHANGED ON CROSSINGS PER AC. M.P. 10.50 - M.P. 27.54 REC. #14550 06-07-07 JJD/WSI/	REV. 5-20-03 INSTALLED CRTU AT M.P. 10.50 REC. #9213 4-10-03 JJD/WITT/WITT/EML	MODIFICATION LEVEL O.A. LAST LEVEL CHK'D. LAST LEVEL MOD. THIS TYP. LAST LEVEL BY DESIGNER. CHANGED FROM TYP.? Y/N	UNION PACIFIC QUALITY PRODUCTIVITY SAFETY SIGNAL DESIGN

DES: WITT, INO
DIG: WITT, INO
CHK: EMG
A.F.E.
ID: GEN1050.20X

UNION PACIFIC RAILROAD
CHICAGO, ILLINOIS TO
CLINTON, IOWA
C.T.C. CIRCUITS
OFFICE OF CHIEF ENG'R OMAHA NEBR.

DATE 11-01-01
SHEET 2a
DWG 10.50
GEN

OLD ID = GEN1043.2a

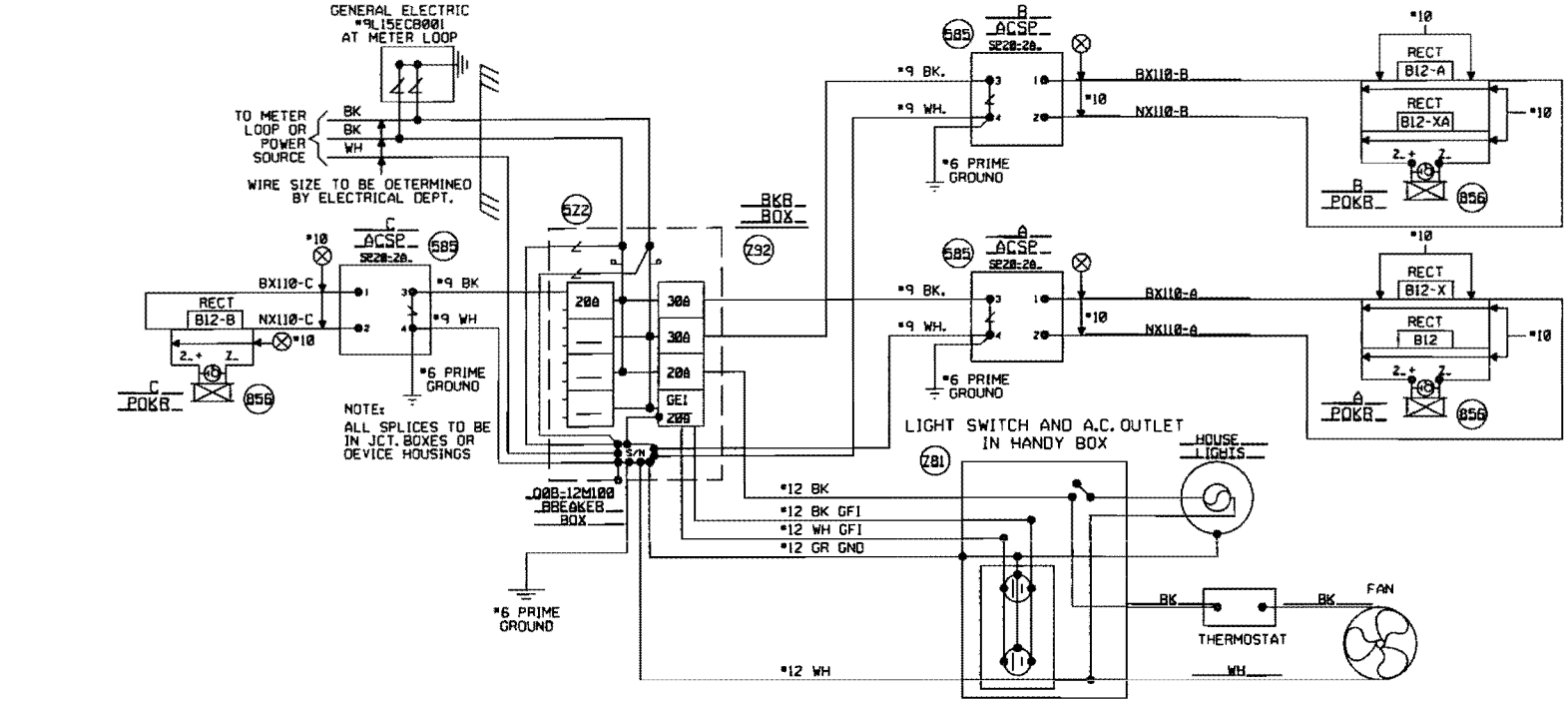

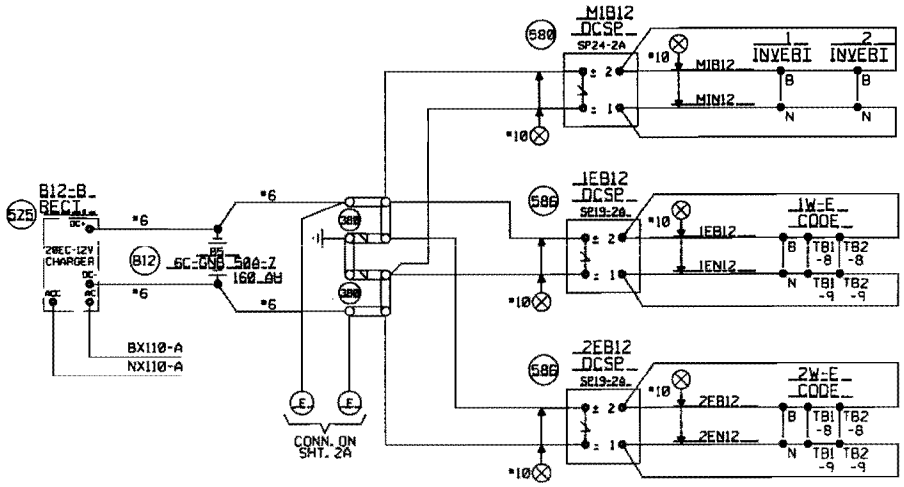

MAYWOOD, ILLINOIS
EIGHTH AVENUE
M.P. 10.50
GENEVA SUBDIVISION
O.D.I. #173.998Y
PROJ.#

OLD M.P. = 10.43

			3 REV. 09-26-07 M.P.'S CHANGED ON CROSSINGS PER AC. M.P. 10.50 - M.P. 27.54 REC. #14590 06-07-07 JJO/NSI/	REV. 5-20-03 INSTALLED CRTU AT M.P. 10.50 REC. #9213 4-10-03 JJO/WITT/WITT/EML	1 REV. 2-12-01 HXP AND E.C. UPGRADE PROJECT M.P. 10.00 - 10.50 W.O. 33814 10-15-00 JJF CJB/NST/HAR/JNM	MODIFICATION LEVEL O.A. LAST LEVEL CHK'D. CO LAST LEVEL MOD. THIS TYP. CK LAST LEVEL BY DESIGNER. CI CHANGED FROM TYP.? Y/N Y	UNION PACIFIC QUALITY PROTECTIVITY SAFETY SIGNAL DESIGN	DES: WARMON DIG: WARMON CHK: JJE A.F.E. 33814 ID: GEN1050.3X	UNION PACIFIC RAILROAD CHICAGO, ILLINOIS TO CLINTON, IOWA C.I.C. CIBCUIIS OFFICE OF CHIEF ENG'R OMAHA NEBR.	DATE 07-22-99 SHEET 3 DWG 10.50 GEN

(REV. 6-1-98) (CIBCUII.TYP.)

OLD ID = GEN1043.3

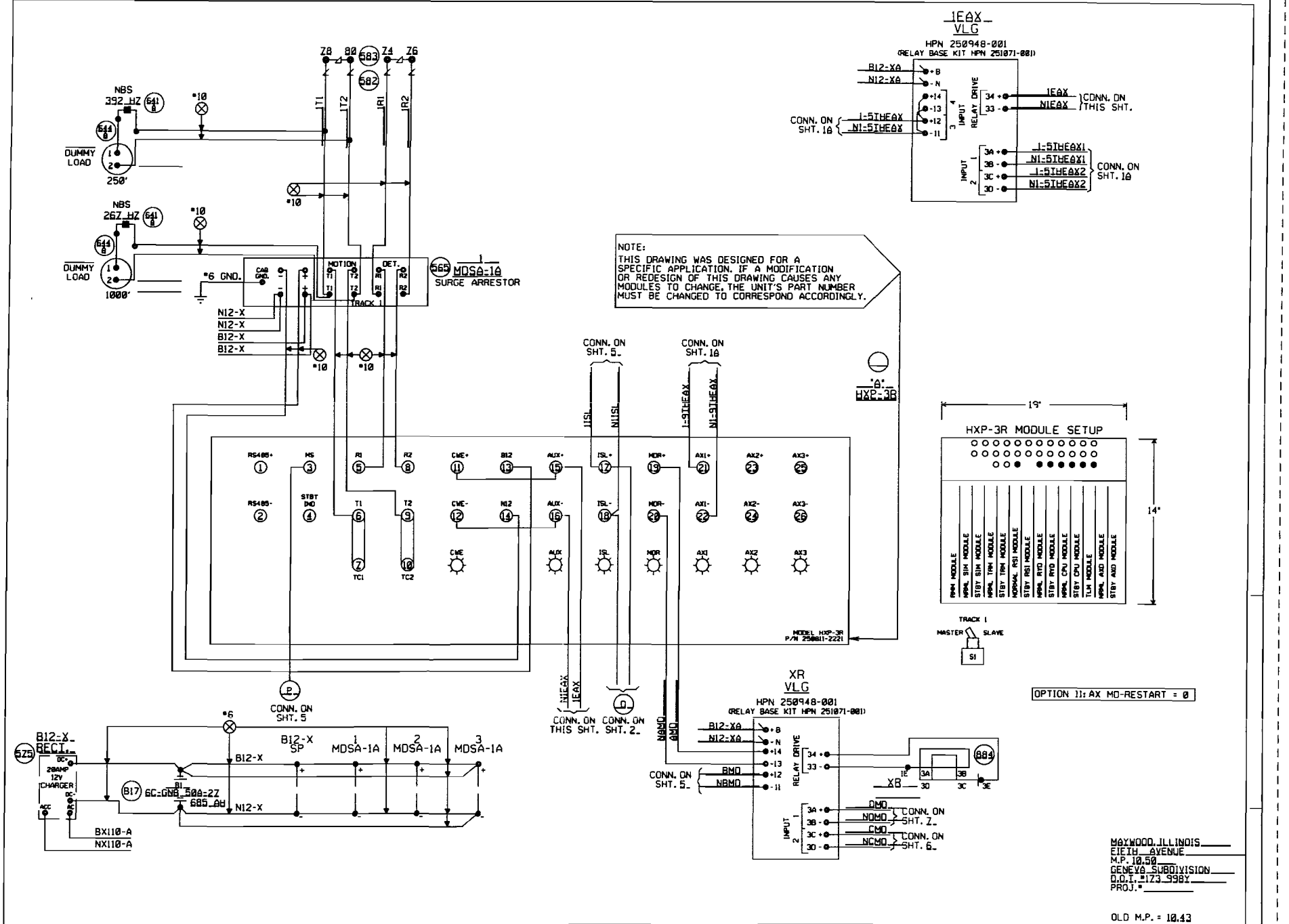
NOTE:
THIS DRAWING WAS DESIGNED FOR A SPECIFIC APPLICATION. IF A MODIFICATION OR REDESIGN OF THIS DRAWING CAUSES ANY MODULES TO CHANGE, THE UNIT'S PART NUMBER MUST BE CHANGED TO CORRESPOND ACCORDINGLY.
1EAX
VLG
HPN 250948-001
(RELAY BASE KIT HPN 251071-001)
B12-XA
N12-XA
CONN. ON SHT. 1A
1-5THEAX
N1-5THEAX
RELAY DRIVE
INPUT
1EAX
N1EAX
CONN. ON THIS SHT.
1-5THEAX1
N1-5THEAX1
1-5THEAX2
N1-5THEAX2
CONN. ON SHT. 1A
NBS 392 HZ
NBS 267 HZ
DUMMY LOAD
250'
1000'
*10
*6 GND.
CAB GND.
MOTION
DET.
TRACK 1
565
1
MDSA-1A
SURGE ARRESTOR
N12-X
B12-X
CONN. ON SHT. 5
CONN. ON SHT. 1A
1-9THEAX
N1-9THEAX
1ISL
N1ISL
'A'
HXP-3R
RS485+
RS485-
HS
STBY DWD
R1
R2
T1
T2
TC1
TC2
CWE+
CWE-
CWE
B12
N12
AUX+
AUX-
AUX
ISL+
ISL-
ISL
MDR+
MDR-
MDR
AX1+
AX1-
AX1
AX2+
AX2-
AX2
AX3+
AX3-
AX3
MODEL HXP-3R
P/N 250811-2221
19"
14"
HXP-3R MODULE SETUP
RWM MODULE
NRML SIM MODULE
STBY SIM MODULE
NRML TRM MODULE
STBY TRM MODULE
NORMAL RSI MODULE
STBY RSI MODULE
NRML RYD MODULE
STBY RYD MODULE
NRML CPU MODULE
STBY CPU MODULE
TLM MODULE
NRML AXD MODULE
STBY AXD MODULE
TRACK 1
MASTER
SLAVE
S1
OPTION 11: AX MD-RESTART = 0
CONN. ON SHT. 5
CONN. ON THIS SHT.
CONN. ON SHT. 2
NBMD
BMD
XR
VLG
HPN 250948-001
(RELAY BASE KIT HPN 251071-001)
CONN. ON SHT. 5
DMD
NDMD
CMD
NCMD
CONN. ON SHT. 2
CONN. ON SHT. 6
884
XB
B12-X
RECT.
575
20AMP 12V CHARGER
B17
6C-GNB-50A-2Z
685 AH
B12-X SP
1 MDSA-1A
2 MDSA-1A
3 MDSA-1A
BX110-A
NX110-A
MAYWOOD, ILLINOIS
EIGHTH AVENUE
M.P. 10.50
GENEVA SUBDIVISION
O.D.I. #173 998Y
PROJ. #
OLD M.P. = 10.43
3 REV. 09-26-07
M.P.'S CHANGED ON CROSSINGS PER AC.
M.P. 10.50 - M.P. 27.54
REC. #14590
06-07-07
JJO/NST/
REV. 5-20-03
INSTALLED CRTU
AT M.P. 10.50
REC. #9213
4-10-03
JJO/WITT/WITT/EML
1 REV. 2-12-01
HXP AND E.C.
UPGRADE PROJECT
M.P. 10.00 - 10.50
W.O. 33814
10-15-00 JJF
CJB/NST/HAR/JNM
MODIFICATION LEVEL
O.A. LAST LEVEL CHK'D. CO
LAST LEVEL MOD. THIS TYP. CK
LAST LEVEL BY DESIGNER. CI
CHANGED FROM TYP.? Y/N Y
UNION PACIFIC
QUALITY PRODUCTIVITY SAFETY
SIGNAL DESIGN
DES: HARMON
DIG: HARMON
CHK: JJE
A.F.E. 33814
ID: GEN1050.4X
UNION PACIFIC RAILROAD
CHICAGO, ILLINOIS TO
CLINTON, IOWA
C.T.C. CIRCUITS
OFFICE OF CHIEF ENG'R
OMAHA NEBR.
DATE 07-22-99
SHEET 4
DWG 10.50
GEN
(REV. 6:1:98) (CIRCUIT.TYP)
OLD ID = GEN1043.4

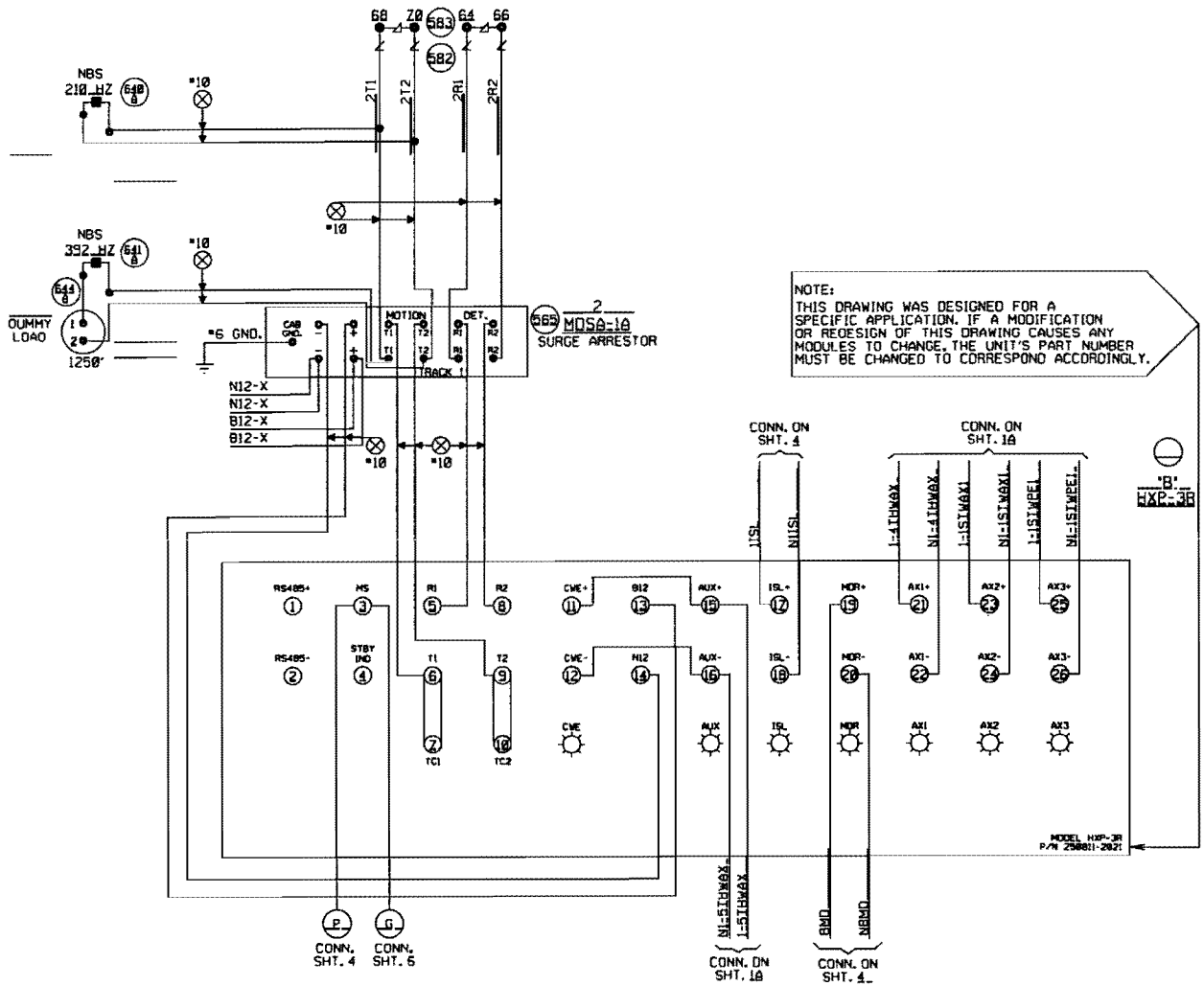

NOTE:
THIS DRAWING WAS DESIGNED FOR A SPECIFIC APPLICATION. IF A MODIFICATION OR REDESIGN OF THIS DRAWING CAUSES ANY MODULES TO CHANGE, THE UNIT'S PART NUMBER MUST BE CHANGED TO CORRESPOND ACCORDINGLY.

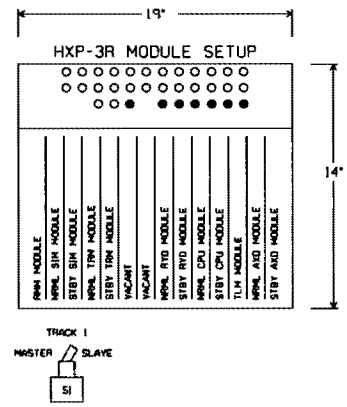

OPTION 11: AX MD-RESTART = 0
OPTION 12: AX MD-RESTART = 0
OPTION 13: AX MD-RESTART = 0

MAYWOOD, ILLINOIS
EIEIH AVENUE
M.P. 10.50
GENEVA SUBDIVISION
D.O.I. #173 998Y
PROJ.#

OLD M.P. = 10.43

3 REV. 09-26-07 W.R.'S CHANGED ON CROSSINGS PER AC. M.P. 10.50 - M.P. 27.54 SEC. #14590 06-07-07 JJO/NSI/	REV. 5-20-03 INSTALLED 25 SECONDS ADV. PREEMTION AT AT M.P. 10.17 W.O.#39659 REC. #9213 4-10-03 JJO/WITT/GENH/JNM	1 REV. 2-12-01 HXP AND E.C. UPGRADE PROJECT M.P. 10.00 - 10.50 W.O.33814 10-15-00 JJF CJB/NSI/HAR/JNM	MODIFICATION LEVEL		UNION PACIFIC	DES: WBRYON	UNION PACIFIC RAILROAD CHICAGO, ILLINOIS IO CLINTON, IOWA C.I.C. CIRCUITS	DATE 07-22-99	
			O.A. LAST LEVEL CHK'D.	CQ		DIG: WBRYON		SHEET 5	
			LAST LEVEL MOD. THIS TYP.	CK		CHK: JJE		OWG 10.50	
			LAST LEVEL BY DESIGNER.	CI		A.F.E. 33814			
			CHANGED FROM TYP.? Y/N	Y	SAFETY SIGNAL DESIGN	ID: GEN1050.5X	OFFICE OF CHIEF ENG'R OMAHA NEBR.	GEN	

(REV. 6-1-98) (CIRCUIT.TYP.) OLD ID = GEN1043.5

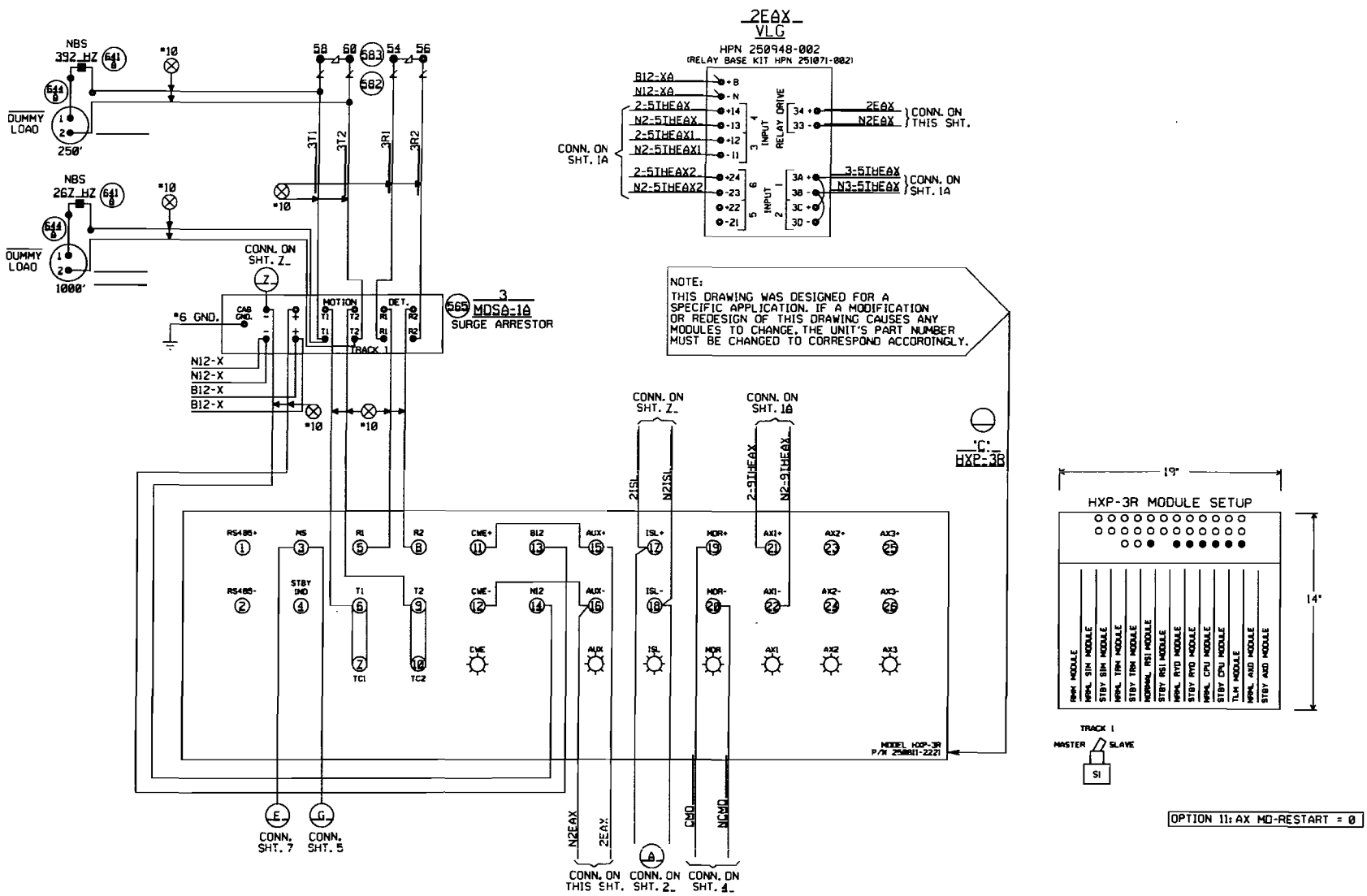

MAYWOOD, ILLINOIS
EIGHTH AVENUE
M.P. 10.50
GENEVA SUBDIVISION
O.O.I. #173 998Y
PROJ. #

OLD M.P. = 10.43

3 REV. 09-26-07 W.E.'S CHANGED ON CROSSINGS PER AC. M.P. 10.50 - M.P. 27.54 REC. #14590 06-07-07 JJO/NSI/	REV. 5-28-03 INSTALLED 25 SECONDS ADV. PREEMTION AT AT M.P. 18.17 W.O. #39659 REC. #9213 4-18-03 JTB JJO/WITT/GEHM/JNM	1 REV. 2-12-01 HXP AND E.C. UPGRADE PROJECT M.P. 10.00 - 10.50 W.O. 33814 10-15-00 JJF CJB/NST/HAR/JNM	MODIFICATION LEVEL		UNION PACIFIC SAFETY SIGNAL DESIGN	DES: HARMON	UNION PACIFIC RAILROAD CHICAGO, ILLINOIS TO CLINTON, IOWA C.I.C. CIRCUITS	DATE 07-22-99	
			C.A. LAST LEVEL CHK'D.	CO		DIG: HARMON		SHEET 6	
			LAST LEVEL MOD. THIS TYP.	CK		CHK: JJF		DWG 10.50	
			LAST LEVEL BY DESIGNER.	CI		A.F.E. 33814			
			CHANGED FROM TYP.7 Y/N	Y		ID: GEN1050.6X	OFFICE OF CHIEF ENG'R	OMAHA NEBR.	GEN

(REV. 6-1-98) (CIRCUIT.TYP.)

OLD ID = GEN1043.6

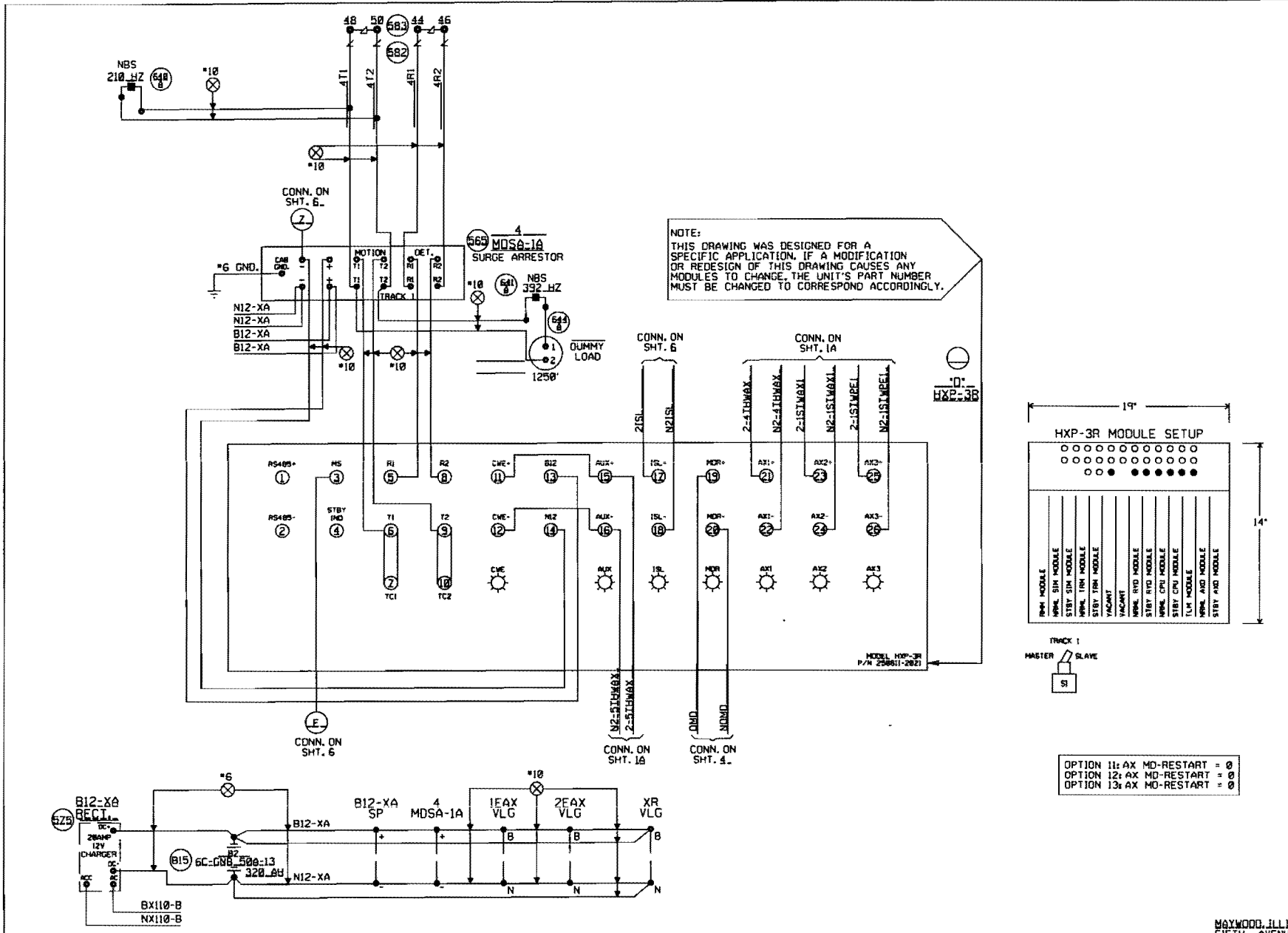

MAYWOOD, ILLINOIS
EIGHTH AVENUE
M.P. 10.50
GENEVA SUBDIVISION
D.O.I. #123_998Y
PROJ.#

OLD M.P. = 10.43

4 REV. 03-26-07 M.P.'S CHANGED ON CROSSINGS PER AC. M.P. 10.50 - M.P. 27.54 REC. #14590 06-07-07 JJO/VSI/	REV. 5-20-03 INSTALLED CRTU AT M.P. 10.50 REC. #9213 4-10-03 JJO/WITT/WITT/EML	REV. 5-20-03 INSTALLED 25 SECONDS ADV. PREEMPTION AT AT M.P. 10.17 W.O.#39654 REC. #9213 4-10-03 JTB JJO/WITT/OEHH/JNM	1 REV. 2-12-01 HXP AND E.C. UPGRADE PROJECT M.P. 10.00 - 10.50 W.O.33814 10-15-00 JJF CJB/NST/HAR/JNM	MODIFICATION LEVEL O.A. LAST LEVEL CHK'D. CO LAST LEVEL MOD. THIS TYP. CK LAST LEVEL BY DESIGNER. CI CHANGED FROM TYP.? Y/N Y	UNION PACIFIC QUALITY PRODUCTIVITY SAFETY SIGNAL DESIGN	DES: HARMON DIG: HARMON CHK: JJE A.F.E. 33814 ID= GEN1050.2%	UNION PACIFIC RAILROAD CHICAGO, ILLINOIS IO CLINTON, IOWA C.I.C. CIRCUITS OFFICE OF CHIEF ENG'R OMAHA NEBR.	DATE 02-22-99 SHEET 2 DWG 10.50 GEN

(REV. 6-1-98) (CIRCUIT.TYP_) OLD ID = GEN1043.2

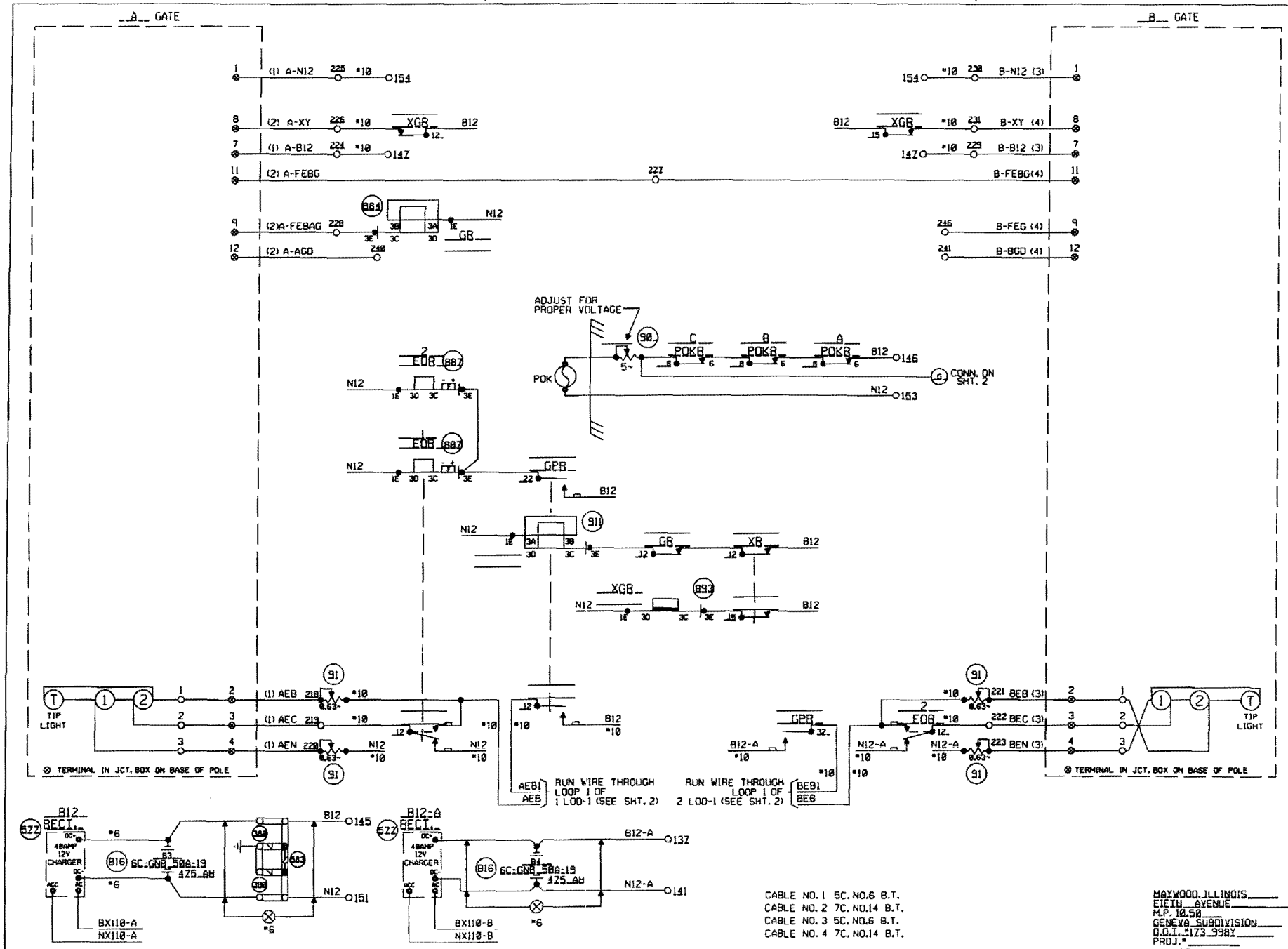

CABLE NO. 1 5C. NO.6 B.T.
CABLE NO. 2 7C. NO.14 B.T.
CABLE NO. 3 5C. NO.6 B.T.
CABLE NO. 4 7C. NO.14 B.T.

MAXWOOD, ILLINOIS
EIGHTH AVENUE
M.P. 10.50
GENEVA SUBDIVISION
O.D.I. #173 998Y
PROJ. #
OLD M.P. = 10.43

4 REV. 09-26-07 M.P.'S CHANGED ON CROSSINGS PER AC. M.P. 10.50 - M.P. 27.54 REC. #14590 06-07-07 JJD/NSI/	3 REV. 5-19-06 REMOVED 1 CELL FROM B12 & B12-A BATT PER AC REC#13663 1-5-06 HRB/NST	REV. 5-20-03 INSTALLED CRTU AT M.P. 10.50 REC. #9213 4-10-03 JJD/WITT/WITT/EML	1 REV. 2-12-01 HXP AND E.C. UPGRADE PROJECT M.P. 10.00 - 10.50 W.O. 33814 10-15-00 JJF CJB/NST/HAR/JNM

MODIFICATION LEVEL	
O.A. LAST LEVEL CHK'D.	CI
LAST LEVEL MOD. THIS TYP.	CK
LAST LEVEL BY DESIGNER.	CI
CHANGED FROM TYP.? Y/N	Y

UNION PACIFIC — SAFETY QUALITY PRODUCTIVITY — SIGNAL DESIGN

DES: HARMON
DIG: HARMON
CHK: JJE
A.F.E. 33814
ID: GEN1050.BX

UNION PACIFIC RAILROAD
CHICAGO, ILLINOIS TO
CLINTON, IOWA
C.T.C. CIRCUITS
OFFICE OF CHIEF ENG'R — OMAHA NEBR.

DATE 02-22-99
SHEET 8
DWG 10.50
GEN

(REV. 7-29-99) (GCIXE.DGN)
OLD ID = GEN1043.B

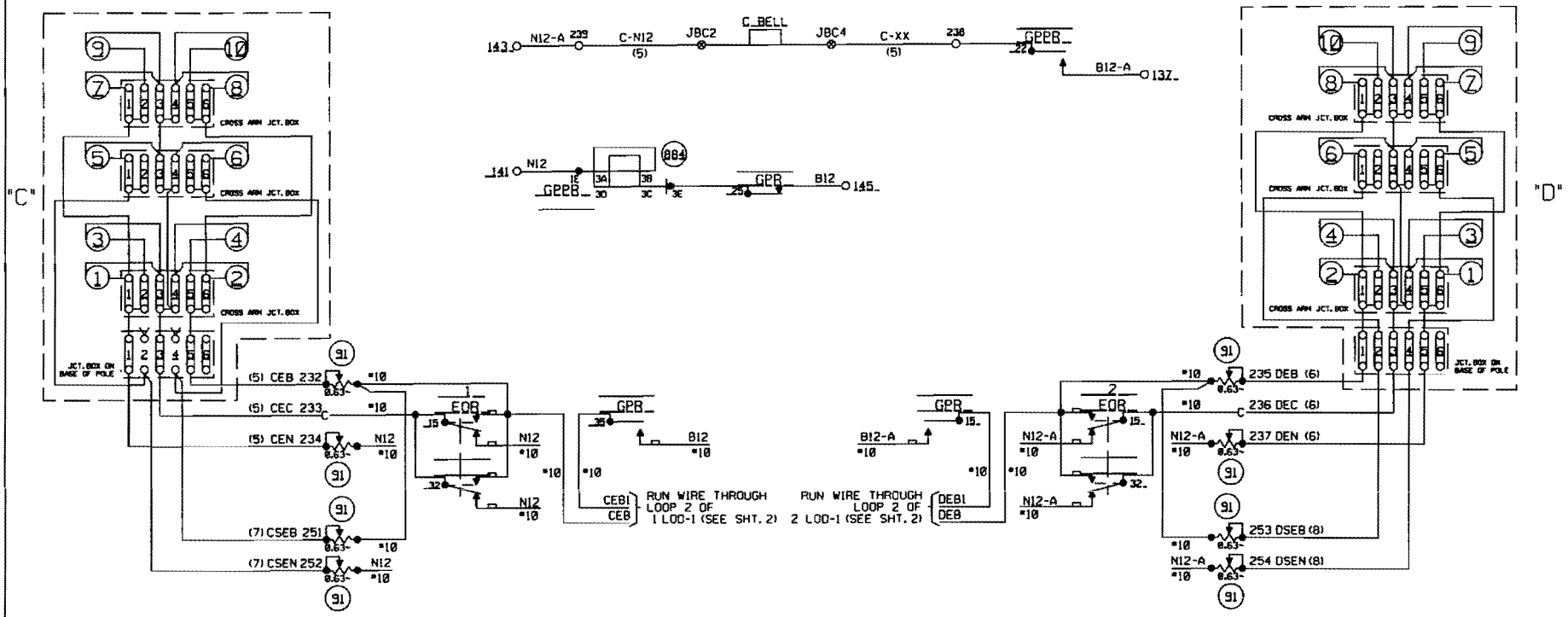

CABLE NO. 5 5C. NO. 6 B.T. TO SIGNAL C
CABLE NO. 6 5C. NO. 6 B.T. TO SIGNAL D
CABLE NO. 7 5C. NO. 6 B.T. TO SIGNAL C
CABLE NO. 8 2C. NO. 6 B.T. TO SIGNAL D

MAYWOOD, ILLINOIS
EIGHTH AVENUE
M.P. 10.50
GENEVA SUBDIVISION
D.O.T. #173 998Y
PROJ. #
OLO M.P. = 10.43

2 REV. 09:26:07	M.P.S. CHANGED ON CROSSINGS PEB.&C. M.P. 10.50 - M.P. 27.54 BEC. #14590 06-07-07 JJO/NST/
1 REV. 2-12-01	HXP AND E.C. UPGRADE PROJECT M.P. 10.00 - 10.50 W.O. 33814 10-15-00 JJF CJB/NST/HAR/JNM

MODIFICATION LEVEL	
O.A. LAST LEVEL CHK'D.	CO
LAST LEVEL MOD. THIS TYP.	CP
LAST LEVEL BY DESIGNER.	CI
CHANGED FROM TYP.? Y/N	Y

UNION PACIFIC
SAFETY QUALITY PRODUCTIVITY
SIGNAL DESIGN

DES: HARMON
DIG: HARMON
CHK: JJE
A.F.E. 33814
ID: GEN1050.35

UNION PACIFIC RAILROAD
CHICAGO, ILLINOIS TO
CLINTON, IOWA
C.I.C. CIRCUITS
OFFICE OF CHIEF ENG'R OMAHA NEBR.

DATE 07-22-99
SHEET 9
DWG 10.50
GEN

(REV. 7-29-99) (CGIYP.DGN)

OLO ID = GEN1043.9

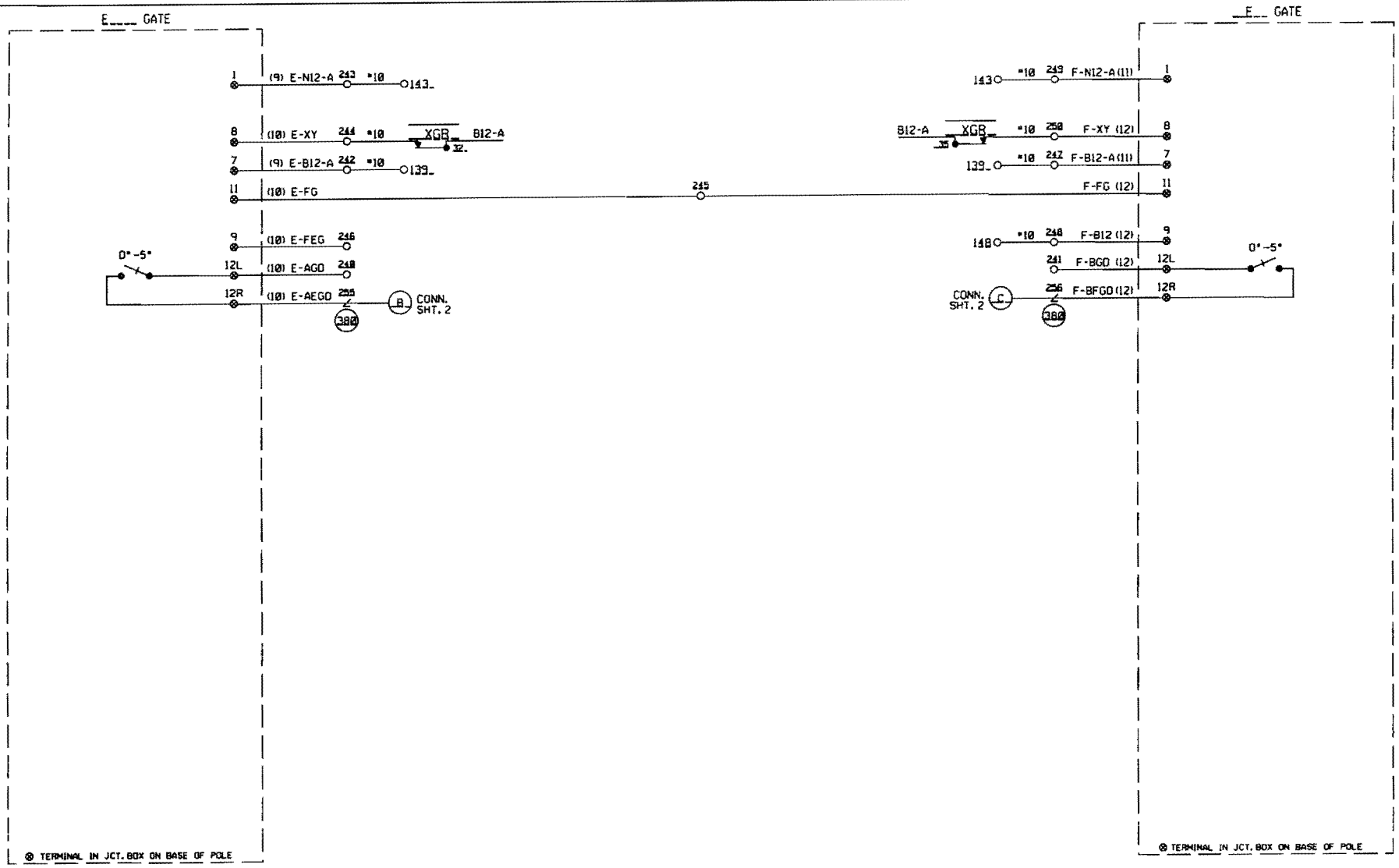

CABLE NO. 9 5C. NO. 6 B.T.
CABLE NO. 10 7C. NO.14 B.T.
CABLE NO. 11 5C. NO. 6 B.T.
CABLE NO. 12 7C. NO. 14 B.T.

MAYWOOD, ILLINOIS
EIGHTH AVENUE
M.P. 10.50
GENEVA SUBDIVISION
O.D.T. #173 998Y
PROJ.#
OLD M.P. = 10.43

2 REV. 09-26-07 M.P.'S CHANGED ON CROSSINGS PER AC. M.P. 10.50 - M.P. 27.54 REC. #14598 06-07-07 JJO/NST/	1 REV. 2-12-01 HXP AND E.C. UPGRADE PROJECT M.P. 10.00 - 10.50 W.O.33814 10-15-00 JJF CJB/NST/HAR/JNM

MODIFICATION LEVEL	
O.A. LAST LEVEL CHK'D.	CI
LAST LEVEL MOD. THIS TYP.	CK
LAST LEVEL BY DESIGNER.	CI
CHANGED FROM TYP.? Y/N	Y

UNION PACIFIC — QUALITY PRODUCTIVITY SAFETY — SIGNAL DESIGN

DES: HARMON
DIG: HARMON
CHK: JJF
A.F.E. 33814
ID: GEN1050.10X

UNION PACIFIC RAILROAD
CHICAGO, ILLINOIS TO
CLINTON, IOWA
C.T.C. CIRCUITS
OFFICE OF CHIEF ENG'R — OMAHA NEBR.

DATE 02-22-99
SHEET 10
DWG 10.50
GEN

(REV. 7-29-99) (GCTYP.DGN)
OLD ID = GEN1043.10

SAFTRAN MODEL "EM" (GRISWOLD)

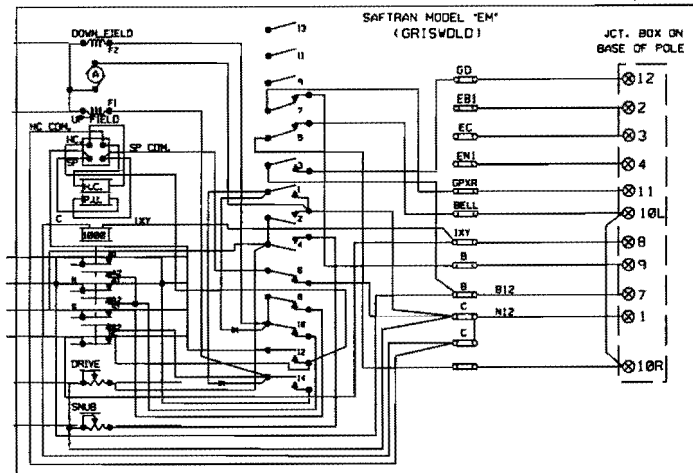

SHOW TYPE MECH. INSTALLED

SPACE NO.	CONTACT OPERATION CONTACT CLOSED CLEARING	RETURNING	CIRCUIT BREAKER FUNCTIONS USE OF CONTACT
1	[illegible]	[illegible]	CONTROL OF ARC SUPPRESSING RECTIFIERS
2	[illegible]	[illegible]	FINAL DOWN SNUB
3	[illegible]	[illegible]	GATE DOWN
4	[illegible]	[illegible]	DOWN SNUB
5	[illegible]	[illegible]	TO CUT OFF BELL WHEN GATE ARM IS DOWN
6	[illegible]	[illegible]	CONTROL OF SOLENOID PICK UP
7	[illegible]	[illegible]	TO CONTROL GPR RELAY & KEEP FLASHING LIGHTS OPERATING UNTIL GATES CLEAR
8	[illegible]	[illegible]	UP SNUB
9			SPARE
10	[illegible]	[illegible]	MOTOR CUTOUT DOWN
11			SPARE
12	[illegible]	[illegible]	OPERATED BY MOTOR CUTOUT SWITCH TO CUT OFF CURRENT FROM SOLENOID PICKUP
13			NO CAM
14	[illegible]	[illegible]	MOTOR CUTOUT(UP)

W.R.R.S. CO TYPE D NO.3567 GATE MECHANISM

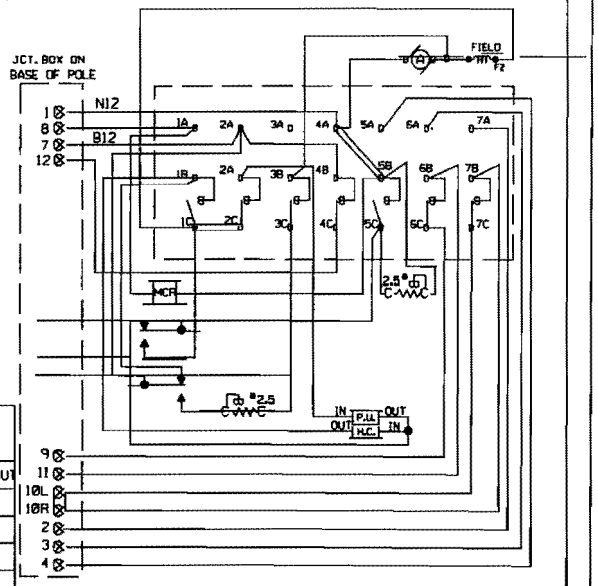

SHOW TYPE MECH. INSTALLED

JCT. BOX ON BASE POLE

L	R	L	R
1	1	7	7
2	2	8	8
3	3	9	9
4	4	10	10
5	5	11	11
6	6	12	12

CONT. SPACE NO.	CLEARING (UP) CLOSES	OPENS	RETURNING (DN.) CLOSES	OPENS	FUNCTION OF CONTACT
1	–	88°	78°	–	UP MOTOR CUTOUT
2	76°	85°	85°	76°	HOLD CLEAR CONTROL
3	50°	–	–	50°	DOWN MOTOR CUTOUT
4	–	5°	5°	–	GATE DOWN
5	–	5°	5°	–	SNUBBING
6	85°			85°	XGCP CONTROL
7	5°	–	–	5°	BELL CONTROL

MECHANISM SHOWN IN CLEAR POSITION.

SAFETRAN PRODUCTS MODEL "S" MECHANISM

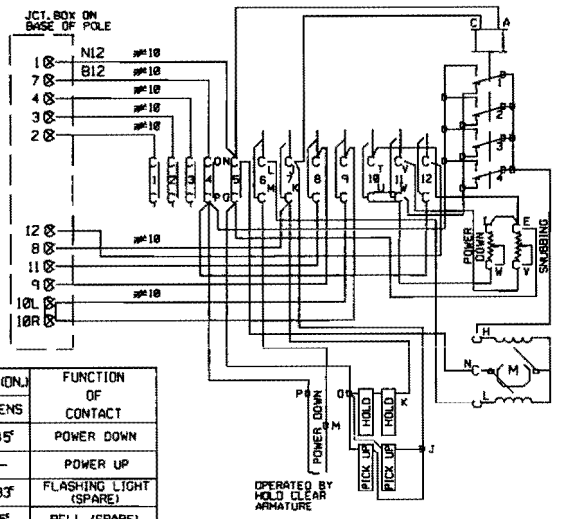

SHOW TYPE MECH. INSTALLED

JCT. BOX ON BASE POLE

L	R	L	R
1	1	7	7
2	2	8	8
3	3	9	9
4	4	10	10
5	5	11	11
6	6	12	12

CONT. SPACE NO.	CLEARING (UP) CLOSES	OPENS	RETURNING (DN.) CLOSES	OPENS	FUNCTION OF CONTACT
6	45°	–	–	45°	POWER DOWN
7	–	89°	89°	–	POWER UP
8	83°	–	–	83°	FLASHING LIGHT (SPARE)
9	5°	–	–	5°	BELL (SPARE)
10	–	5°	5°	–	HORIZONTAL SNUB
11	–	45°	45°	–	DOWN SNUB
12	–	5°	5°	–	GATE DOWN

MECHANISM SHOWN IN CLEAR POSITION.

WCH 3593-E

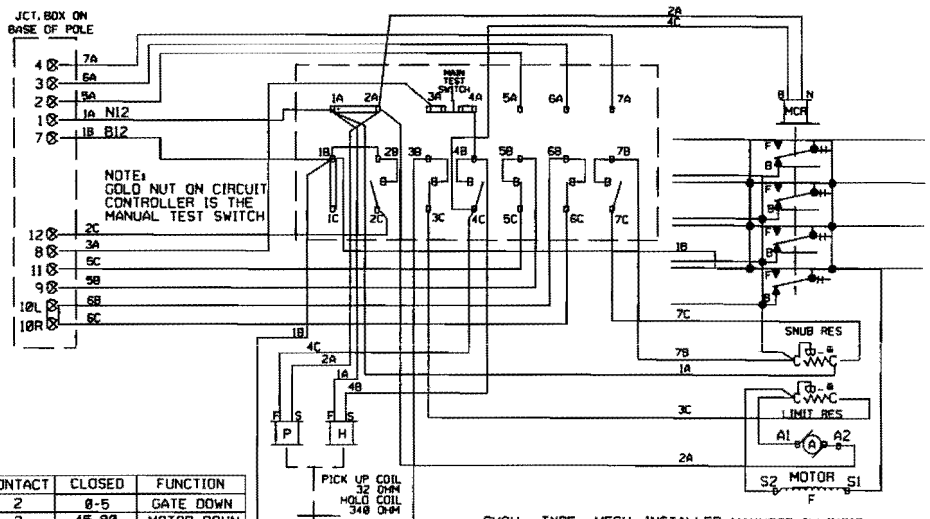

NOTE: GOLD NUT ON CIRCUIT CONTROLLER IS THE MANUAL TEST SWITCH

CONTACT	CLOSED	FUNCTION
2	0-5	GATE DOWN
3	45-90	MOTOR DOWN
4	0-89	MOTOR UP
5	86-90	GATE NORM
6	5-90	BELL
7	0-5	SNUB

SHOW TYPE MECH. INSTALLED

MAYWOOD, ILLINOIS
EIGHTH AVENUE
M.P. 10.50
GENEVA SUBDIVISION
O.D.T. #173.99BY
PROJ.#

FOR WIRING GATES "A" & "B"

OLD M.P. = 10.43

2 REV. 09-26-07 W.R.S. CHANGED ON CROSSINGS PER AC. M.P. 10.50 - M.P. 27.54 REC. #14598 06-07-07 JJQ/NSI/	1 REV. 2-12-01 HXP AND E.C. UPGRADE PROJECT M.P. 10.00 - 10.50 W.O.33814 10-15-00 JJF CJB/NST/HAR/JNM	MODIFICATION LEVEL: O.A. LAST LEVEL CHK'D. CO; LAST LEVEL MOD. THIS TYP. CK; LAST LEVEL BY DESIGNER. CI; CHANGED FROM TYP.7 Y/N N	UNION PACIFIC SAFETY SIGNAL DESIGN

DES: HABMON
DIG: HABMON
CHK: JJE
A.F.E. 33814
ID: GEN1250.11X

UNION PACIFIC RAILROAD
CHICAGO, ILLINOIS TO
CLINTON, IOWA
C.I.C. CIRCUITS
OFFICE OF CHIEF ENG'R OMAHA NEBR.

DATE 07-22-99
SHEET 11
DWG 10.50
GEN

(REV. 6-1-98) (GWIBING.DGN)

OLD ID = GEN1043.11

SAFTRAN MODEL 'EM' (GRISWOLD)

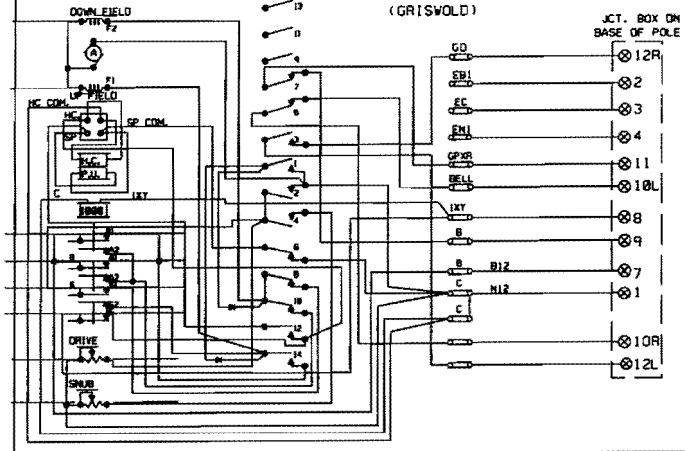

SHOW TYPE MECH. INSTALLED

SPACE NO.	CONTACT OPERATION CONTACT CLOSED CLEARING	RETURNING	CIRCUIT BREAKER FUNCTIONS USE OF CONTACT
1	[illegible]	[illegible]	CONTROL OF ARC SUPRESSING RECTIFIERS
2	[illegible]	[illegible]	FINAL DOWN SNUB
3	[illegible]	[illegible]	GATE DOWN
4	[illegible]	[illegible]	DOWN SNUB
5	[illegible]	[illegible]	TO CUT OFF BELL WHEN GATE ARM IS DOWN
6	[illegible]	[illegible]	CONTROL OF SOLENOID PICK UP
7	[illegible]	[illegible]	TO CONTROL GPR RELAY & KEEP FLASHING LIGHTS OPERATING UNTIL GATES CLEAR
8	[illegible]	[illegible]	UP SNUB
9	—	—	SPARE
10	[illegible]	[illegible]	MOTOR CUTOUT(DOWN)
11	—	—	SPARE
12	[illegible]	[illegible]	OPERATED BY MOTOR CUTOUT SWITCH TO CUT OFF CURRENT FROM SOLENOID PICKUP
13	—	—	NO CAM
14	[illegible]	[illegible]	MOTOR CUTOUT(UP)

W.A.R.S. CO TYPE D NO.3567 GATE MECHANISM

SHOW TYPE MECH. INSTALLED

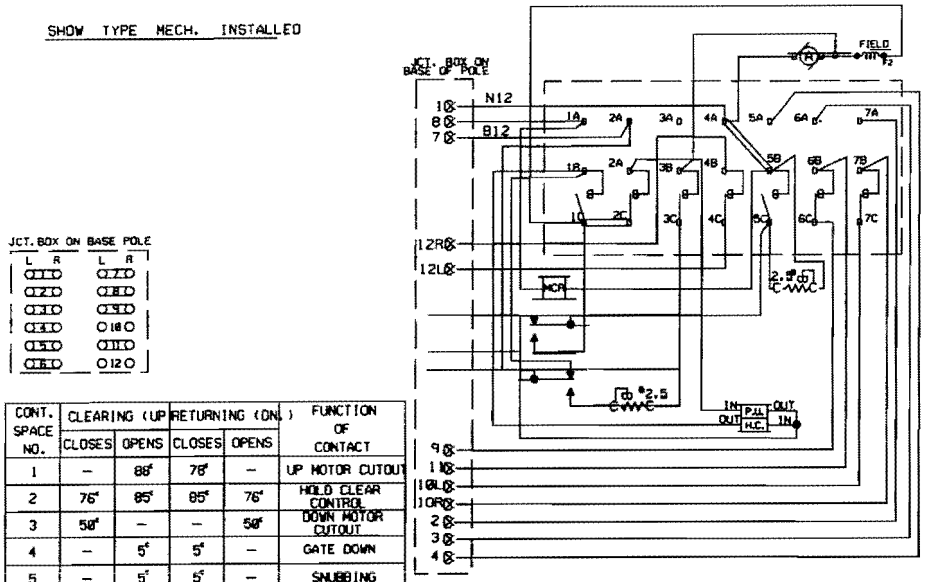

JCT. BOX ON BASE POLE

L	R	L	R
1	1	1	7
2	2	2	8
3	3	3	9
4	4	4	10
5	5	5	11
6	6	6	12

CONT. SPACE NO.	CLEARING (UP) CLOSES	OPENS	RETURNING (DN.) CLOSES	OPENS	FUNCTION OF CONTACT
1	—	88°	78°	—	UP MOTOR CUTOUT
2	76°	85°	85°	76°	HOLD CLEAR CONTROL
3	50°	—	—	50°	DOWN MOTOR CUTOUT
4	—	5°	5°	—	GATE DOWN
5	—	5°	5°	—	SNUBBING
6	85°			85°	XGCP CONTROL
7	6°	—	—	6°	BELL CONTROL

MECHANISM SHOWN IN CLEAR POSITION.

SAFETRAN PRODUCTS MODEL 'S' MECHANISM

SHOW TYPE MECH. INSTALLED

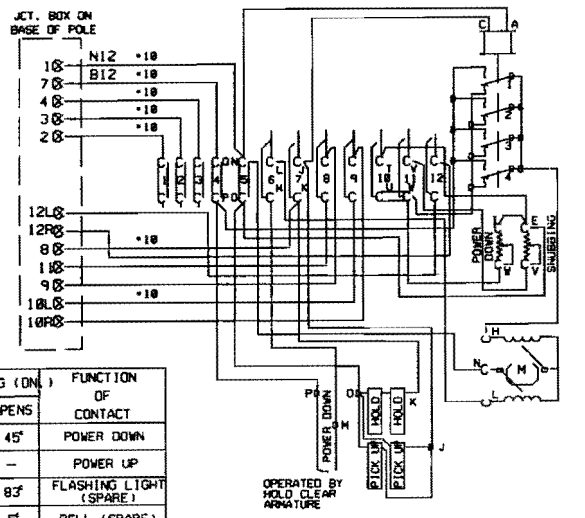

JCT. BOX ON BASE POLE

L	R	L	R
1	1	1	7
2	2	2	8
3	3	3	9
4	4	4	10
5	5	5	11
6	6	6	12

CONT. SPACE NO.	CLEARING (UP) CLOSES	OPENS	RETURNING (DN.) CLOSES	OPENS	FUNCTION OF CONTACT
6	45°	—	—	45°	POWER DOWN
7	—	89°	89°	—	POWER UP
8	83°	—	—	83°	FLASHING LIGHT (SPARE)
9	5°	—	—	5°	BELL (SPARE)
10	—	5°	5°	—	HORIZONTAL SNUB
11	—	45°	45°	—	DOWN SNUB
12	—	5°	5°	—	GATE DOWN

MECHANISM SHOWN IN CLEAR POSITION.

WCH 3593-E

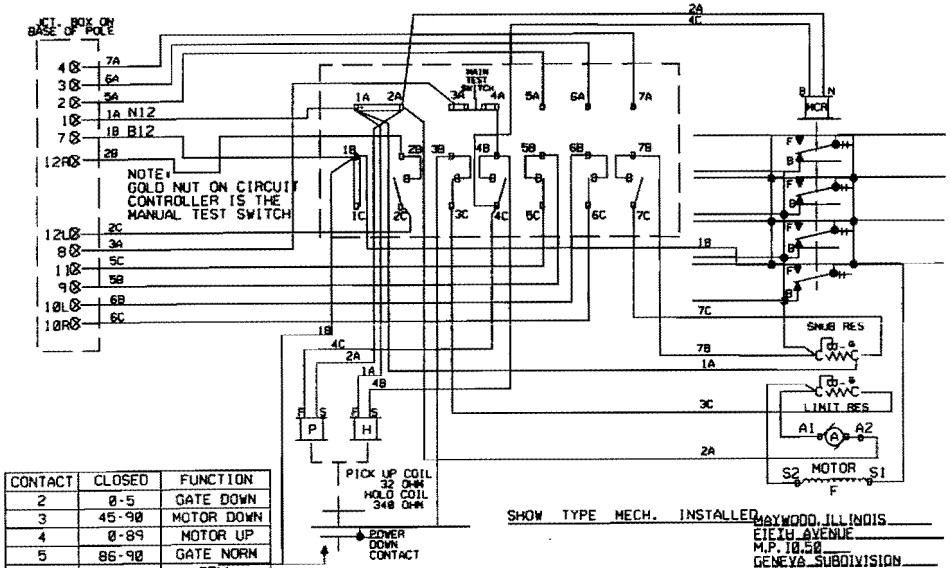

CONTACT	CLOSED	FUNCTION
2	0-5	GATE DOWN
3	45-90	MOTOR DOWN
4	0-89	MOTOR UP
5	86-90	GATE NORM
6	5-90	BELL
7	0-5	SNUB

SHOW TYPE MECH. INSTALLED

MAYWOOD, ILLINOIS
ETIETH AVENUE
M.P. 10.50
GENEVA SUBDIVISION
O.C.T.#173 988Y
PROJ.#

OLD M.P. = 10.43

FOR WIRING GATES "E" & "F"

2) REV. 09-26-97 M.P.'S CHANGED ON CROSSINGS PER AC. M.P. 10.50 - M.P. 27.54 SEC. 114598 06-07-97 JJO/NST/	1) REV. 2-12-01 HXP AND E.C. UPGRADE PROJECT M.P. 10.00 - 10.50 W.O. 33814 10-15-00 JJF CJB/NST/HAR/JNM	MODIFICATION LEVEL: O.A. LAST LEVEL CHK'D. CO; LAST LEVEL MOD. THIS TYP. CK; LAST LEVEL BY DESIGNER. CI; CHANGED FROM TYP.? Y/N N	UNION PACIFIC QUALITY PROSPERITY SAFETY SIGNAL DESIGN

DES: HARMON
DTG: HARMON
CHK: JJE
A.F.E. 33814
ID: GEN1050.12X

UNION PACIFIC RAILROAD
CHICAGO, ILLINOIS TO
CLINTON, IOWA
C.I.C. CIRCUITS

OFFICE OF CHIEF ENG'R — OMAHA NEBR.

DATE 02-22-99
SHEET 12
DWG 10.50
GEN

(REV. 6-1-98) (4GWIRING.7)

OLD ID = GEN1043.12

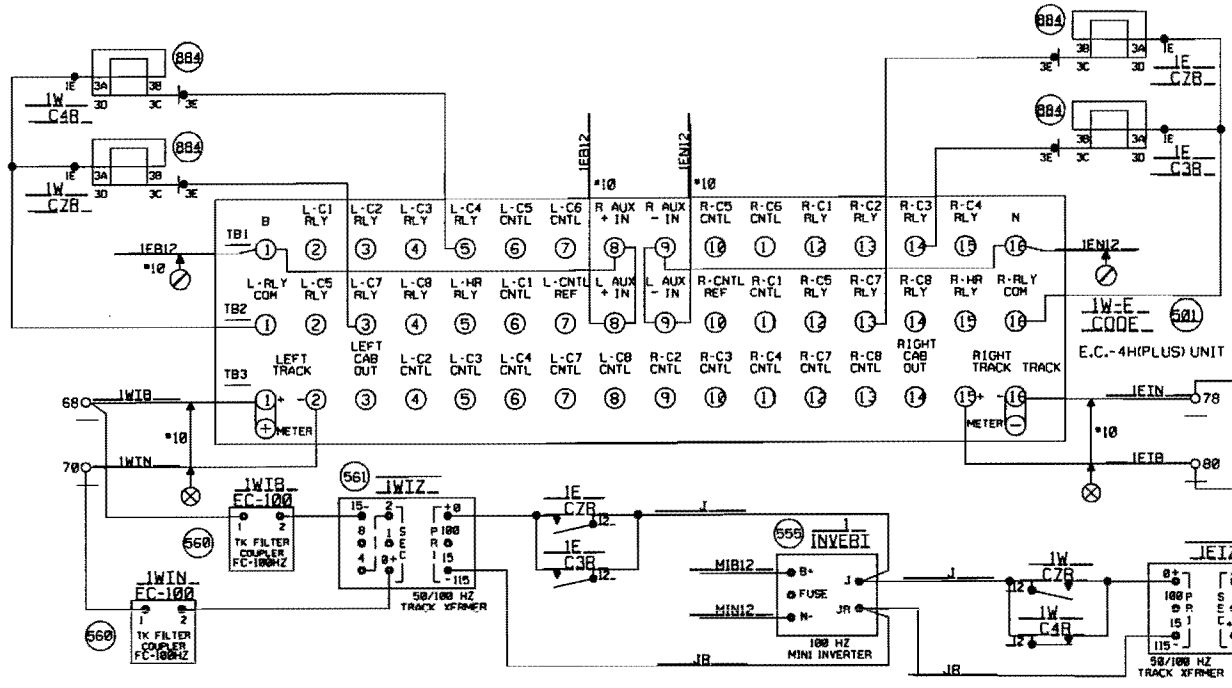

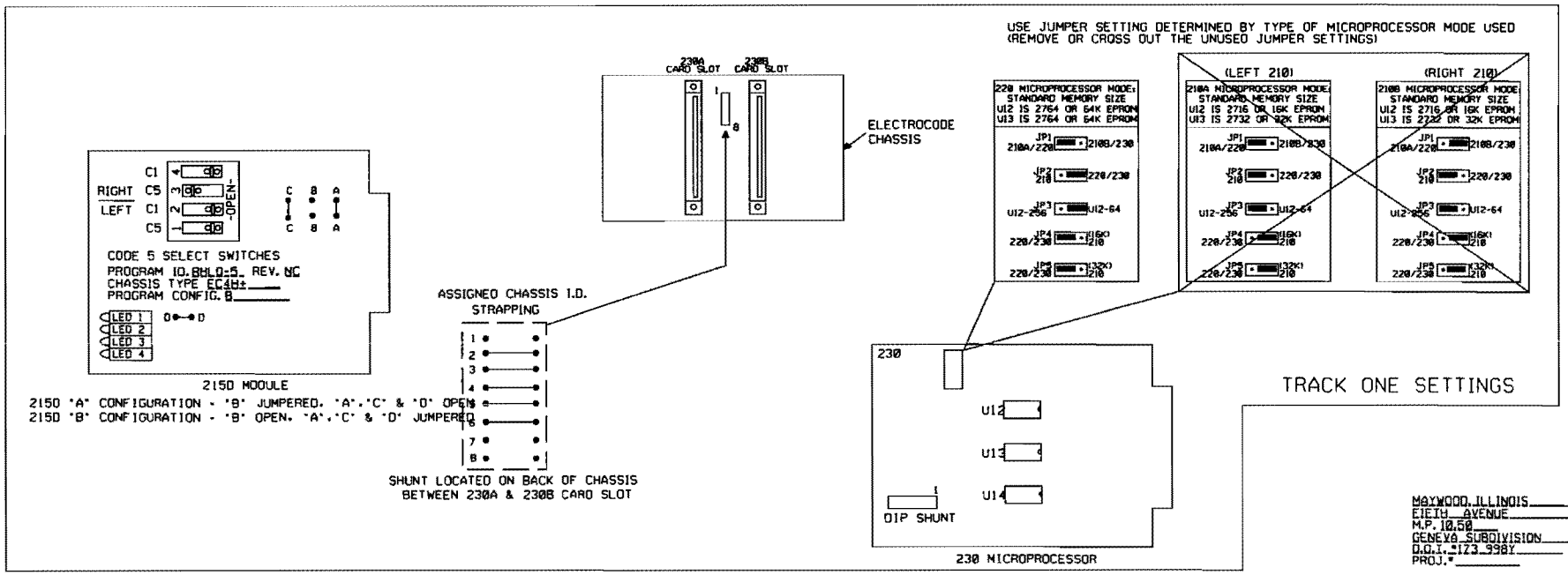

MAYWOOD, ILLINOIS
EIGHTH AVENUE
M.P. 10.50
GENEVA SUBDIVISION
O.O.I. #173.998Y
PROJ. #

OLD M.P. = 10.43

REV.	MODIFICATION LEVEL	
2 REV. 09-26-07 M.P.'S CHANGED ON CROSSINGS PER AC. M.P. 10.50 - M.P. 27.54 SEC. #14590 06-07-07 JJD/NSI/	O.A. LAST LEVEL CHK'D.	CW
1 REV. 2-12-01 HXP AND E.C. UPGRADE PROJECT M.P. 10.00 - 10.50 W.O. 33814 10-15-00 JJF CJB/NST/HAR/JNM	LAST LEVEL MOD. THIS TYP.	CC
	LAST LEVEL BY DESIGNER.	CI
	CHANGED FROM TYP.? Y/N	Y

UNION PACIFIC — QUALITY PRODUCTIVITY SAFETY — SIGNAL DESIGN

DES: HOBSON
DIG: HOBSON
CHK: JJF
A.F.E. 33814
ID: GEN1050.13X

UNION PACIFIC RAILROAD
CHICAGO, ILLINOIS TO
CLINTON, IOWA
C.I.C. CIRCUITS
OFFICE OF CHIEF ENG'R — OMAHA NEBR.

DATE 07-22-99
SHEET 13
DWG 10.50
GEN

(REV. 12/01/98) (2IE4BGBC.I) OLD ID = GEN1043.13

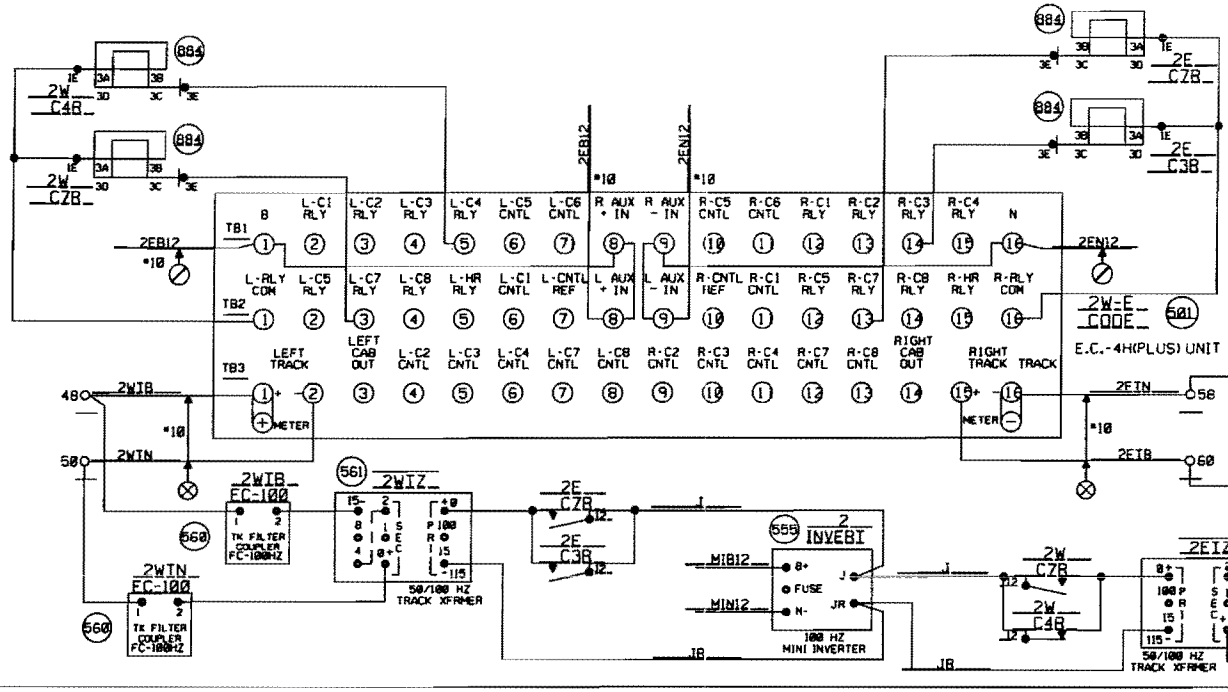

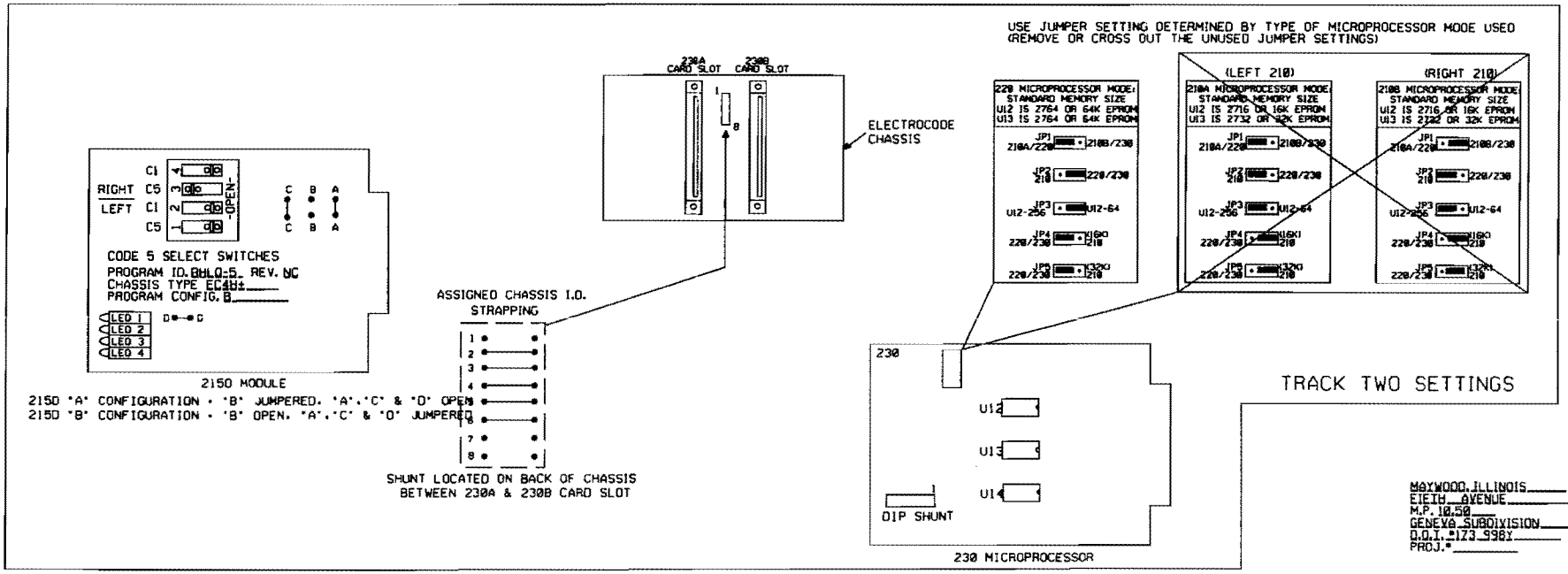

MAYWOOD, ILLINOIS
EIGHTH AVENUE
M.P. 10.50
GENEVA SUBDIVISION
D.O.T. 173 998Y
PROJ.#

OLD M.P. = 10.43

2 REV. 09-26-07 M.P.'S CHANGED ON CROSSINGS PER AC M.P. 10.50 - M.P. 27.54 SEC. #14590 06-07-07 JJD/NSI/	1 REV. 2-12-01 HXP AND E.C. UPGRADE PROJECT M.P. 10.00 - 10.50 W.O. 33814 10-15-00 JJF CJB/NST/HAR/JNM	MODIFICATION LEVEL: O.A. LAST LEVEL CHK'D. CM; LAST LEVEL MOD. THIS TYP. CC; LAST LEVEL BY DESIGNER. CI; CHANGED FROM TYP.? Y/N Y	UNION PACIFIC QUALITY SAFETY SIGNAL DESIGN	DES: HARMON; DIG: HARMON; CHK: JJE; A.F.E. 33814; ID: GEN1050.14X	UNION PACIFIC RAILROAD CHICAGO, ILLINOIS IO CLINTON, IOWA C.I.C. CIRCUITS OFFICE OF CHIEF ENG'R OMAHA NEBR.

DATE 07-22-99
SHEET 14
DWG 10.50
GEN

(REV. 12/01/98) (2IE4BGBC.1)

OLD ID = GEN1043.14

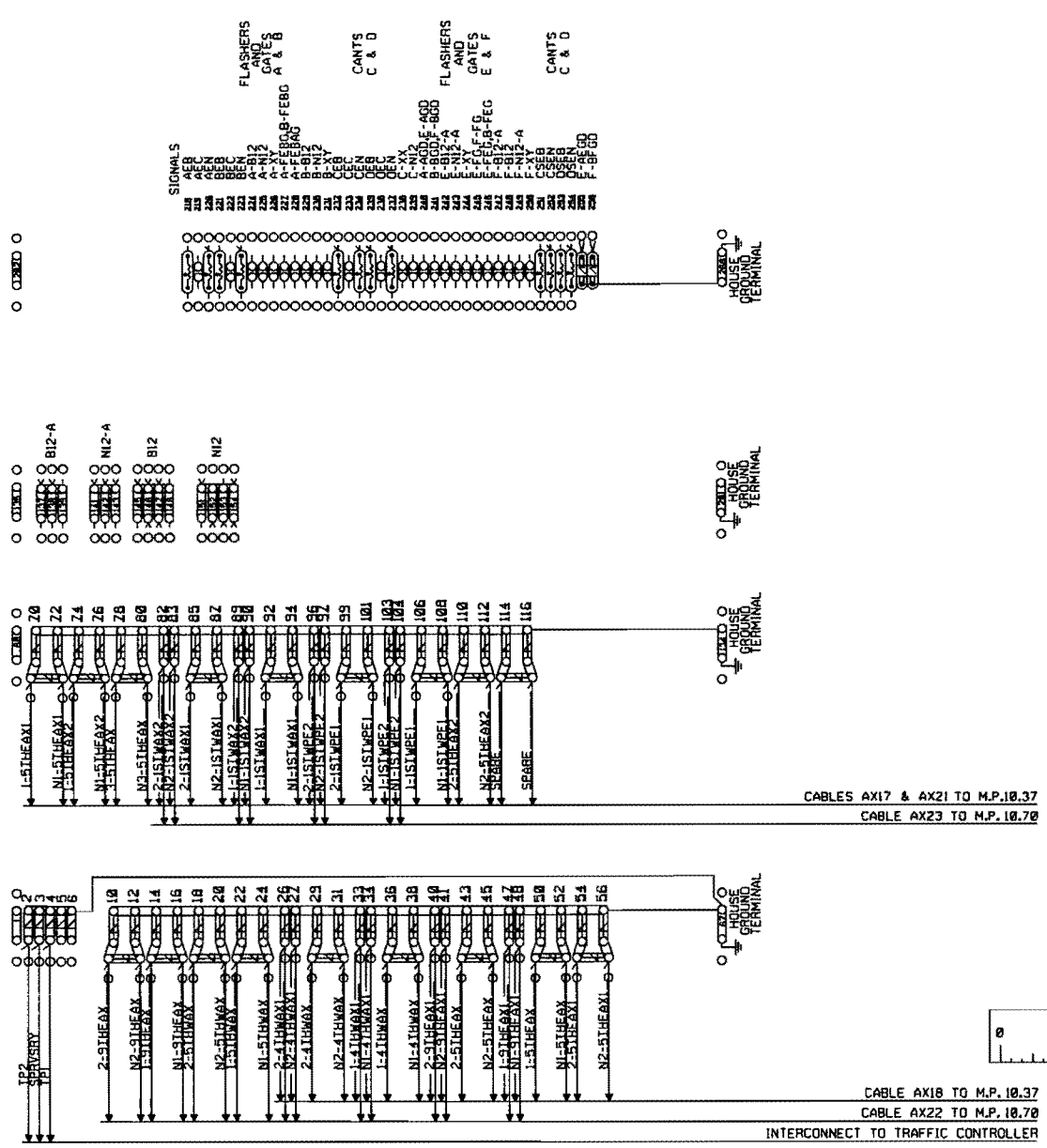

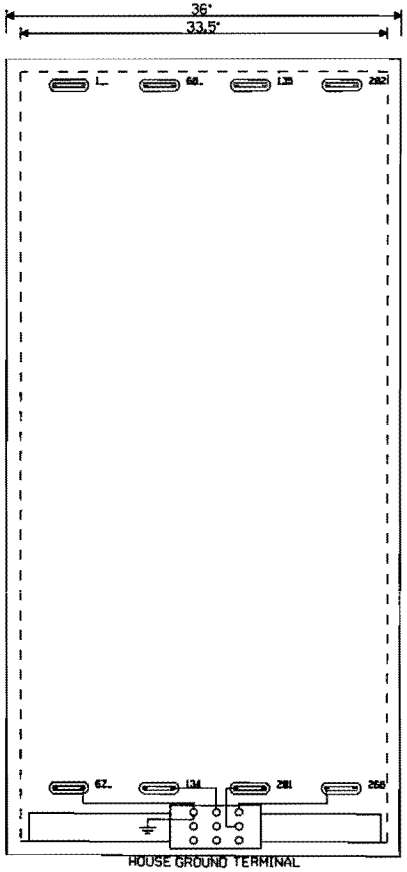

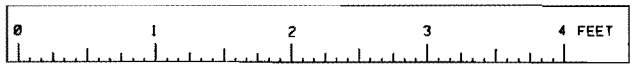

SCALE: 1.5 INCHES = 1 FOOT

SEE SIGNAL STANDARD
DRAWING SD45A.2 FOR
HOUSE GROUNDING SCHEME

MAYWOOD, ILLINOIS
EIGTH AVENUE
M.P. 10.50
GENEVA SUBDIVISION
O.O.T.#123_998Y
PROJ.#

OLD M.P. = 10.43

4 REV. 09-26-02 W.E.'S CHANGED ON CROSSINGS PER AC. M.P. 10.50 - M.P. 27.54 REC. #14590 06-07-02 JJO/WSI/	REV. 5-20-03 INSTALLED CRTU AT M.P. 10.50 REC. #9213 4-10-03 JJO/WITT/WITT/EML	REV. 5-20-03 INSTALLED 25 SECONDS ADV. PREEMTION AT AT M.P. 10.17 W.O.# 39659 REC. #9213 4-10-03 JJO/WITT/GENH/JNM	1 REV. 2-12-01 HXP AND E.C. UPGRADE PROJECT M.P. 10.00 - 10.50 W.O.33814 10-15-00 JJF CJB/NST/HAR/JNM	MODIFICATION LEVEL		UNION PACIFIC SAFETY SIGNAL DESIGN	DES: HARMON DTG: HARMON CHK: JJE A.F.E. 33814 ID: GEN1050.15X	UNION PACIFIC RAILROAD CHICAGO, ILLINOIS TO CLINTON, IOWA C.I.C. CIRCUITS OFFICE OF CHIEF ENG'R SIGNALS OMAHA NEBR.	DATE 07-22-99 SHEET 15 DWG 10.50 GEN
				O.A. LAST LEVEL CHK'D.	CO				
				LAST LEVEL MOD. THIS TYP.	CO				
				LAST LEVEL BY DESIGNER.	CI				
				CHANGED FROM TYP.? Y/N	Y				

(REV. 12/01/98) (LHE4CGE.18)

OLD ID = GEN1043.15

PLAN VIEW
8'x10' HOUSE
-NO SCALE-

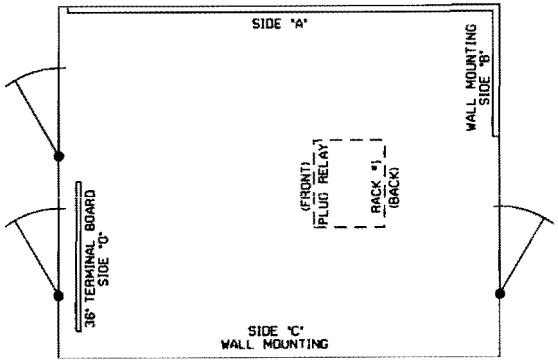

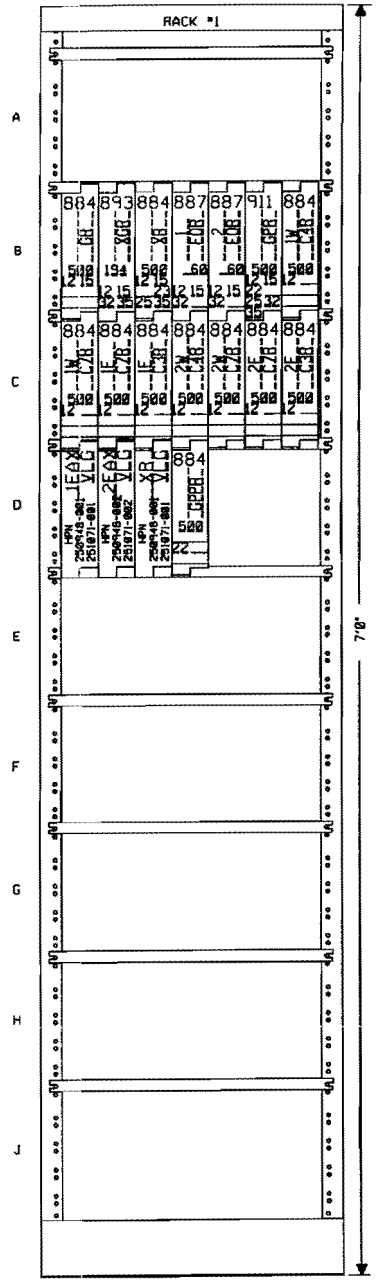

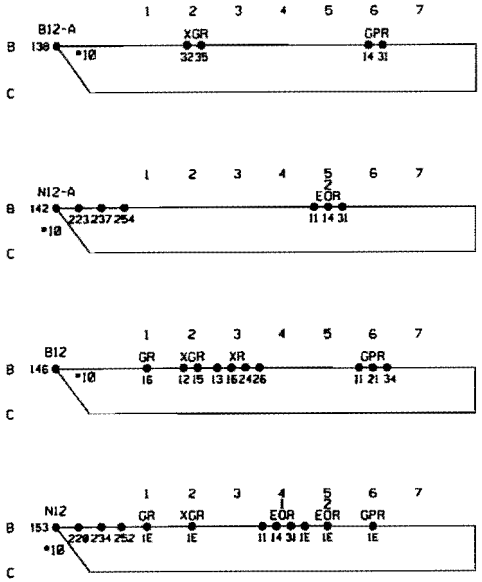

TYPICAL CONTACT CONFIGURATIONS
FOR PLUG-IN RELAYS

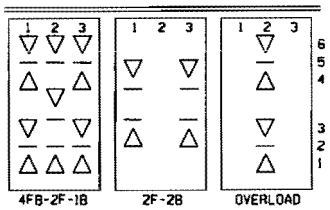

LEGEND

— = CONTACT HEEL

▽ = CONTACT FRONT

△ = CONTACT BACK

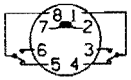

POTTTER &
BRUMFIELD
REAR VIEW

MAYWOOD, ILLINOIS
EIEIH AVENUE
M.P. 10.50
GENEVA SUBDIVISION
O.O.T.#173 998Y
PROJ.#

OLD M.P. = 10.43

4 REV. 09-26-07 M.P.'S CHANGED ON CROSSINGS PER AC M.P. 10.50 - M.P. 27.54 REC. #14598 06-07-07 JJO/NSI/	REV. 5-20-03 INSTALLED CRTU AT M.P. 10.50 REC. #9213 4-10-03 JJO/WITT/WITT/EML	REV. 5-20-03 INSTALLED 25 SECONDS ADV. PREEMTION AT AT M.P. 18.17 W.O.#39659 REC. #9213 4-10-03 JTB JJO/WITT/OEHH/JNM	1 REV. 2-12-01 HXP AND E.C. UPGRADE PROJECT M.P. 10.00 - 10.50 W.O.33814 10-15-00 JJF CJB/NST/HAR/JNM	MODIFICATION LEVEL		UNION PACIFIC SAFETY QUALITY PRODUCTIVITY SIGNAL DESIGN	DES: HARMON DIG: HARMON CHK: JJE A.F.E. 33814 ID: GEN1050.16X	UNION PACIFIC RAILROAD CHICAGO, ILLINOIS TO CLINTON, IOWA C.I.C. CIRCUITS	DATE 07-22-99 SHEET 16 DWG 10.50 GEN
				O.A. LAST LEVEL CHK'D.	CO				
				LAST LEVEL MOD. THIS TYP.	CO				
				LAST LEVEL BY DESIGNER.	CI				
				CHANGED FROM TYP.? Y/N	Y			OFFICE OF CHIEF ENG'R SIGNALS OMAHA NEBR.	

(REV. 12/01/98) (BHE4CGE.19.)

OLD ID = GEN1043.16

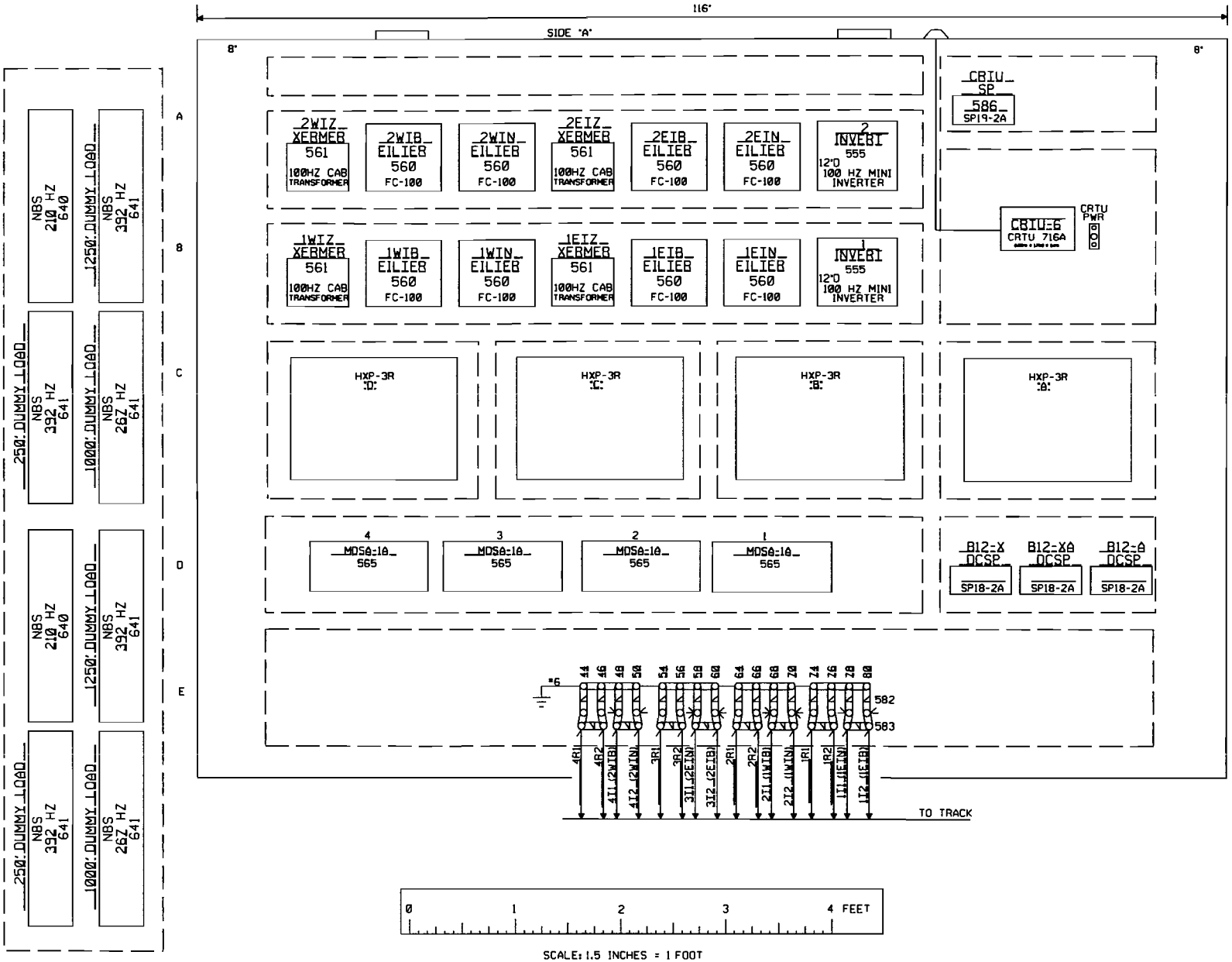

SCALE: 1.5 INCHES = 1 FOOT

MAYWOOD, ILLINOIS
EIGHTH AVENUE
M.P. 10.50
GENEVA SUBDIVISION
D.O.T.#173 998Y

OLD M.P. = 10.43

3 REV. 09-26-07 M.P.'S CHANGED ON CROSSINGS PER AC. M.P. 10.50 - M.P. 27.54 REC. #14590 06-07-07 JJO/NSI	REV. 5-20-03 INSTALLED CRTU AT M.P. 10.50 REC. #9213 4-10-03 JJO/WITT/WITT/EML	1 REV. 2-12-01 HXP AND E.C. UPGRADE PROJECT M.P. 10.00 - 10.50 W.O. 33814 10-15-00 JJF CJB/NST/HAR/JNM	MODIFICATION LEVEL		UNION PACIFIC SIGNAL DESIGN	DES: HARMON	UNION PACIFIC RAILROAD CHICAGO, ILLINOIS IO CLINTON, IOWA C.I.C. CIRCUITS	DATE 07-22-99	
			Q.A. LAST LEVEL CHK'D.	CO		DIG: HARMON		SHEET 17	
			LAST LEVEL MOD. THIS TYP.	CO		CHK: JJE		DWG 10.50	
			LAST LEVEL BY DESIGNER.	CI		A.F.E. 33814		GEN	
			CHANGED FROM TYP.? Y/N	Y		ID: GEN1050.17X	OFFICE OF CHIEF ENG'R SIGNALS OMAHA NEBR.		

(REV. 12/01/98) (BHE4CGP.22)

OLD ID = GEN1043.17

NOTE: ALL DIMENSIONS SHOWN ARE APPROXIMATE.

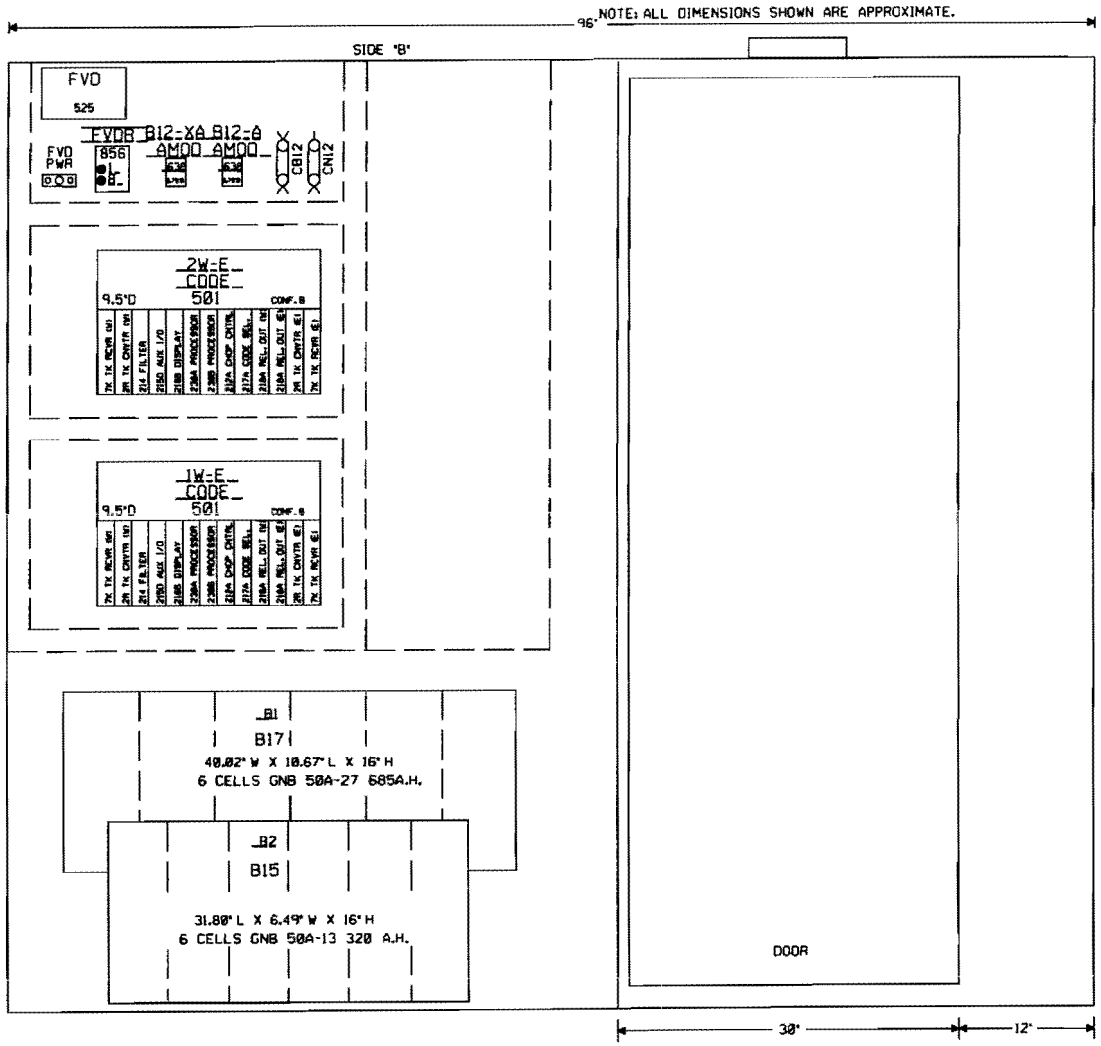

NOTE: ALL DIMENSIONS SHOWN ARE APPROXIMATE.

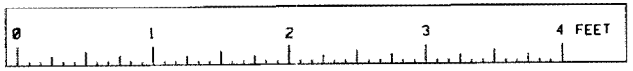

SCALE: 1.5 INCHES = 1 FOOT

MAYWOOD, ILLINOIS
EIGHTH AVENUE
M.P. 10.50
GENEVA SUBDIVISION
O.O.T.# IZ3 998Y
PROJ.#

OLD M.P. = 10.43

3 REV. 09-26-07 M.P.'S CHANGED ON CROSSINGS PER AC. M.P. 10.50 - M.P. 27.54 REC. #14590 06-07-07 JJO/NSI/	REV. 5-20-03 INSTALLED CRTU AT M.P. 10.50 REC. #9213 4-18-03 JJO/WITT/WITT/EML
1 REV. 2-12-01 HXP AND E.C. UPGRADE PROJECT M.P. 10.00 - 10.50 W.O. 33814 10-15-00 JJF CJB/NST/HAR/JNM	

MODIFICATION LEVEL	
O.A. LAST LEVEL CHK'D.	CO
LAST LEVEL MOD. THIS TYP.	CO
LAST LEVEL BY DESIGNER.	CI
CHANGED FROM TYP.? Y/N	-Y-

UNION PACIFIC SAFETY PRODUCTIVITY QUALITY SIGNAL DESIGN

DES: HARMON
DIG: HARMON
CHK: JJE
A.F.E. 33814
ID: GEN1050.18X

UNION PACIFIC RAILROAD
CHICAGO, ILLINOIS TO
CLINTON, IOWA
C.I.C. CIRCUITS
OFFICE OF CHIEF ENG'R SIGNALS OMAHA NEBR.

DATE 07-22-99
SHEET 18
DWG 10.50
GEN

(REV. 12/01/98) (BHE4CGP.21)

OLD ID = GEN1043.18

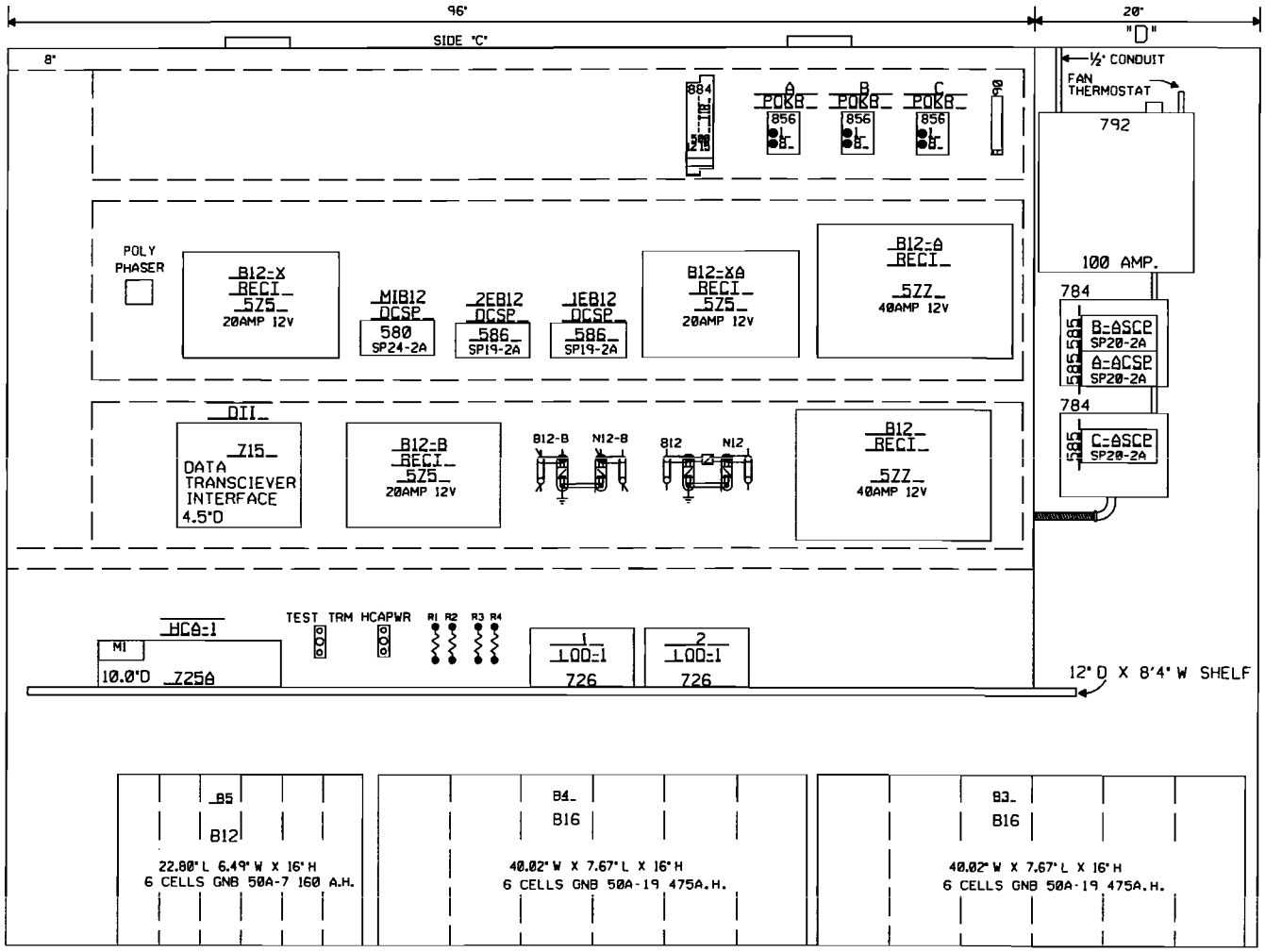

0 1 2 3 4 FEET

SCALE: 1.5 INCHES = 1 FOOT

MAYWOOD, ILLINOIS
EIGHTH AVENUE
M.P. 10.50
GENEVA SUBDIVISION
D.O.T.# 173 998Y
PROJ.#

OLD M.P. = 10.43

4 REV. 03-26-07 M.P.'S CHANGED ON CROSSINGS PER AC. M.P. 10.50 - M.P. 27.54 REC. 514550 06-07-07 JJO/WSI/	3 REV. 5-19-06 REMOVED 1 CELL FROM B12 & B12-A BATT PER AC REC#13663 1-5-06 HRB/NST	REV. 5-20-03 INSTALLED CRTU AT M.P. 10.50 REC. #9213 4-10-03 JJO/WITT/WITT/EML	1 REV. 2-12-01 HXP AND E.C. UPGRADE PROJECT M.P. 10.00 - 10.50 W.O. 33814 10-15-00 JJF CJB/NST/HAR/JNM	MODIFICATION LEVEL		UNION PACIFIC	DES: HARMON	UNION PACIFIC RAILROAD CHICAGO, ILLINOIS TO CLINTON, IOWA C.I.C. CIRCUITS	DATE 02-22-99
				O.A. LAST LEVEL CHK'D.	CO		DIG: HARMON		SHEET 19
				LAST LEVEL MOD. THIS TYP.	CO		CHK: JJE		DWG 10.50
				LAST LEVEL BY DESIGNER.	CI		A.F.E. 33814		
				CHANGED FROM TYP.? Y/N	Y	SIGNAL DESIGN	ID: GEN1050.19X	OFFICE OF CHIEF ENG'R SIGNALS OMAHA NEBR.	GEN

(REV. 12/01/98) (BHE4CGP.22)

OLD ID = GEN1043.19

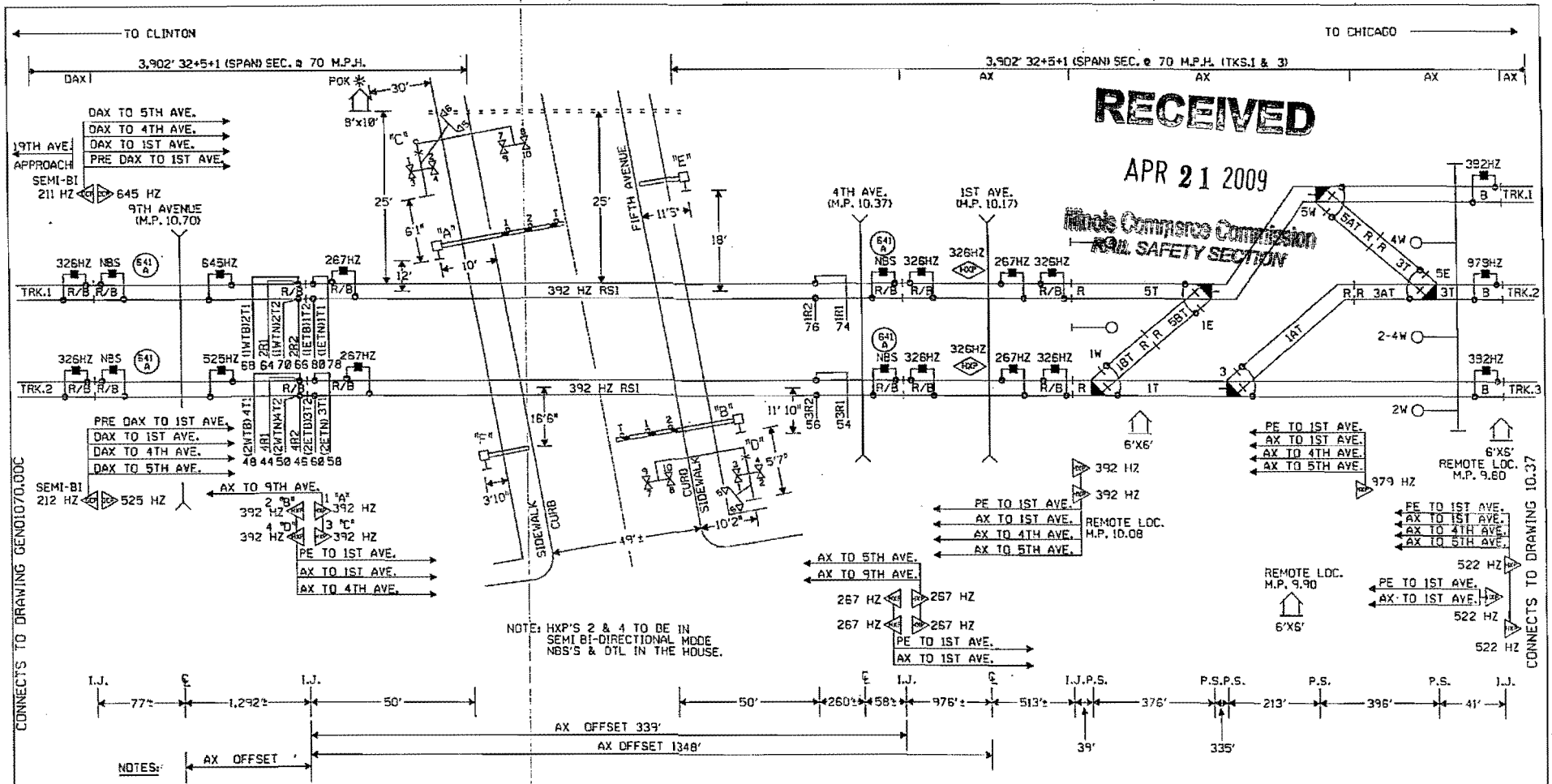

RECEIVED
APR 21 2009
Illinois Commerce Commission
RAIL SAFETY SECTION

NOTES:

⊗ = TWISTED WIRES
INSULATED 1 TWIST PER FT.
ALL TRACK WIRES 2C. #6

TRANSMITTER AND RECEIVER LEADS TO BE SEPARATED BY AT LEAST 12" IN TRENCH. LENGTHS SHOULD NOT EXCEED MANUFACTURES RECOMMENDATION.

TOP OF FOUNDATION TO BE AT SAME ELEVATION AS THE SURFACE OF THE TRAVELED WAY & NO MORE THAN 4" ABOVE THE SURFACE OF THE GROUND.

ALL BUNGALOW WIRING TO BE #16 AWG FLEX UNLESS OTHERWISE SPECIFIED EXCEPT ALL GROUND WIRE TO BE #6 AWG FLEX OR LARGER.

ALL WIRING IN GATE MECHANISM TO BE #10 "AWG FLEX".

REFER TO UP STANDARD DWG FOR BUNGALOW GROUNDING.

DO NOT USE 7 CELLS OF B12 BATTERY UNLESS REQUIRED TO MAINTAIN MINIMUM LAMP VOLTAGE.

ALL LIGHTS TO BE 12" ROUNDELS.

= = = = = = 4" X ' CONDUIT

LIGHTS: C & D 1,2 30°/15°
C & D 3,4,5,6 70°
C & D 7,8,9,10 20°/32°

GATE A: '
GATE B: '
CANT C: '
CANT D: '
GATE E: '
GATE F: '

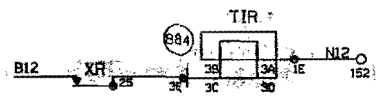

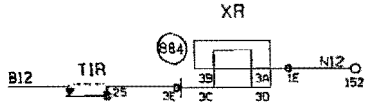

= IN
= OUT
CTC/SDB

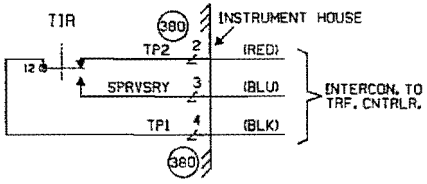

W ← → E

REV. 9-23-08
INSTALLED CROSSING CONTROLLER CARDS TO EXISTING GCP 4000 AT 9TH AVENUE.
REC. #15247
6-2-08 RLT
TH/WITT/CTC/RDD

MAYWOOD, ILLINOIS
FIFTH AVENUE
M.P. 10.50
GENEVA SUBDIVISION
D.O.T.#173 998Y

OLD M.P. = 10.43

REV. 9-23-08 REPLCAED HXP-1 WITH A GCP 4000 AT 9TH AVENUE M.P. 10.70 W.O. #80735 REC. #15247 6-2-08 RLT TH/WITT/CTC/RDD	5 REV. 09-26-07 M.P.'S CHANGED ON CROSSINGS PER AC. M.P. 10.50 - M.P. 27.54 REC. #14590 06-07-07 JJG/NST/ /	REV. 12-29-06 INSTALLED 3-WIRE TRAFFIC CONTROL CIRCUIT. REC. #14320 12-05-06 TAH/WITT	REV. 12-21-04 REVISED FREQ. FOR 1ST AVE. (M.P.10.17) REC#11973 9-30-04 HM/WITT	REV. 5-20-03 INSTALLED 25 SECONDS ADV. PREEMPTION AT M.P. 10.17 W.O. #39651 REC. #9213 4-10-03 JTB JJG/WITT/CEH/JNM	1 REV. 2-12-01 HXP AND E.C. UPGRADE PROJECT M.P. 10.00 - 10.50 W.O.33814 10-15-00 /JJF CJB/NST /HAR/JJM	MODIFICATION LEVEL		UNION PACIFIC SAFETY SIGNAL DESIGN	DES: HARMON DIG: HARMON CHK: JJF A.F.E. 33814 ID: GEN1E0J.IX	UNION PACIFIC RAILROAD CHICAGO, ILLINOIS TO CLINTON, IOWA C.T.C. CIRCUITS Office of Sr.AVP Engineering - Signal/TCD OMAHA NEBR.	DATE 07-22-99 SHEET 1 DWG 10.50 GEN
						Q.A. LAST LEVEL CHK'D.	CI				
						LAST LEVEL MOD. THIS TYP.	CK				
						LAST LEVEL BY DESIGNER.	CT				
						CHANGED FROM TYP.7 Y/N	Y				

(REV. 6-1-98) (1TKBGC.1)

OLD ID = GEN1043.1

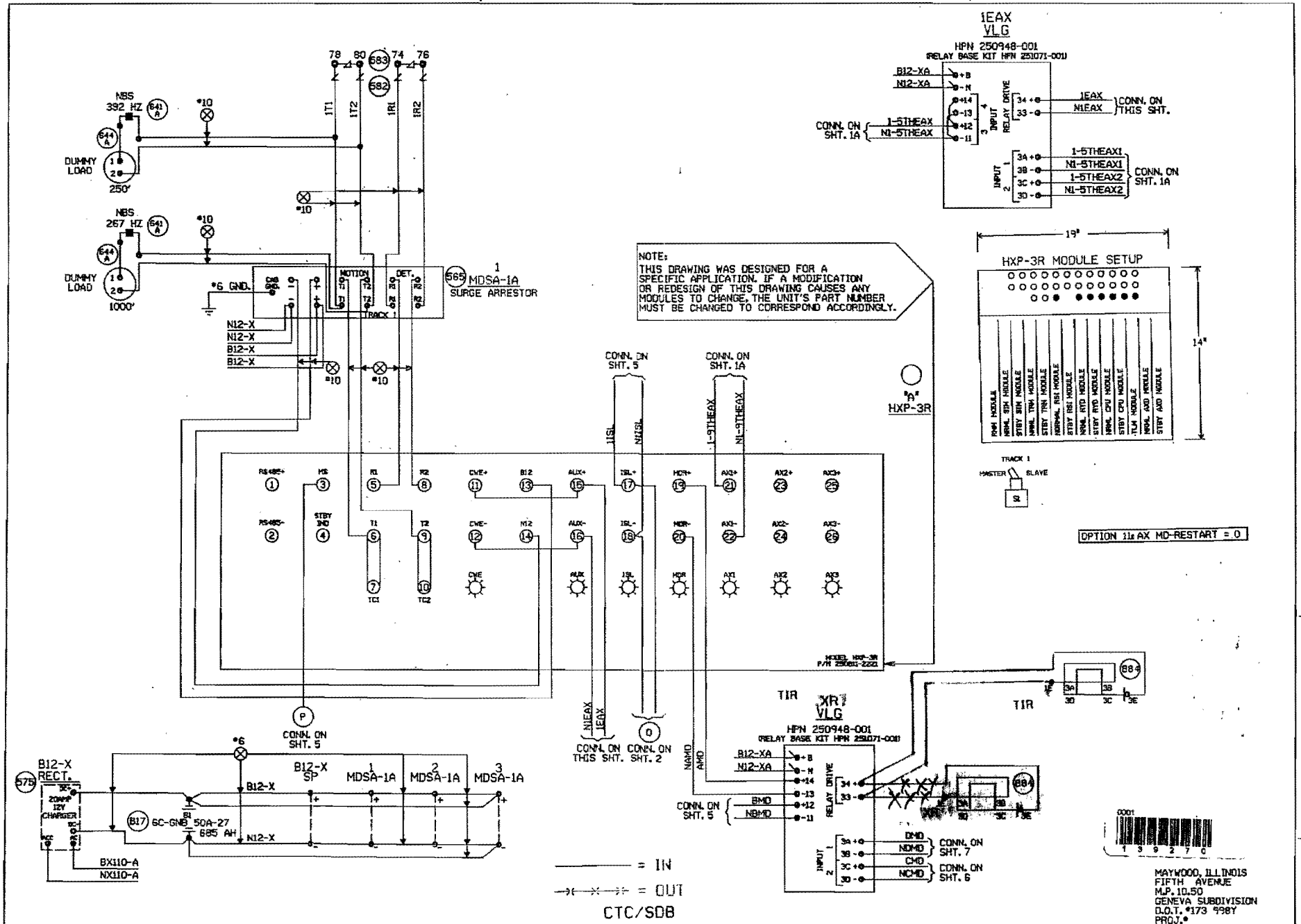

			3 REV. 09-28-07 M.P.'S CHANGED ON CROSSINGS PER AC. M.P. 10.50 - M.P. 27.54 REC. #14590 06-07-07 JJO/NST/ /	REV. 5-20-03 INSTALLED CRTU AT M.P. 10.50 REC. #4213 4-10-03 JJO/WITT/WITT/EHL	1 REV. 2-12-01 HXP AND E.C. UPGRADE PROJECT M.P. 10.00 - 10.50 W.O. 33814 10-15-00 JJF CJB/NST/HAR/JNM	MODIFICATION LEVEL		UNION PACIFIC SAFETY SIGNAL DESIGN	DES: HARMON DRA: HARMON CHK: JJF A.F.E. 33614 ID: GEN1050.4X	UNION PACIFIC RAILROAD CHICAGO, ILLINOIS TO CLINTON, IOWA C.T.C. CIRCUITS OFFICE OF CHIEF ENG'R OMAHA NEBR.	DATE 07-22-99 SHEET 4 DWG 10.50 GEN
						Q.A. LAST LEVEL CHK'D.	CQ			
						LAST LEVEL MOD. THIS TYP.	CK			
						LAST LEVEL BY DESIGNER.	CT			
						CHANGED FROM TYP.? Y/N	Y			

(REV. 6-1-98) (CIRCUIT.TYP)

OLD ID = GEN1043.4