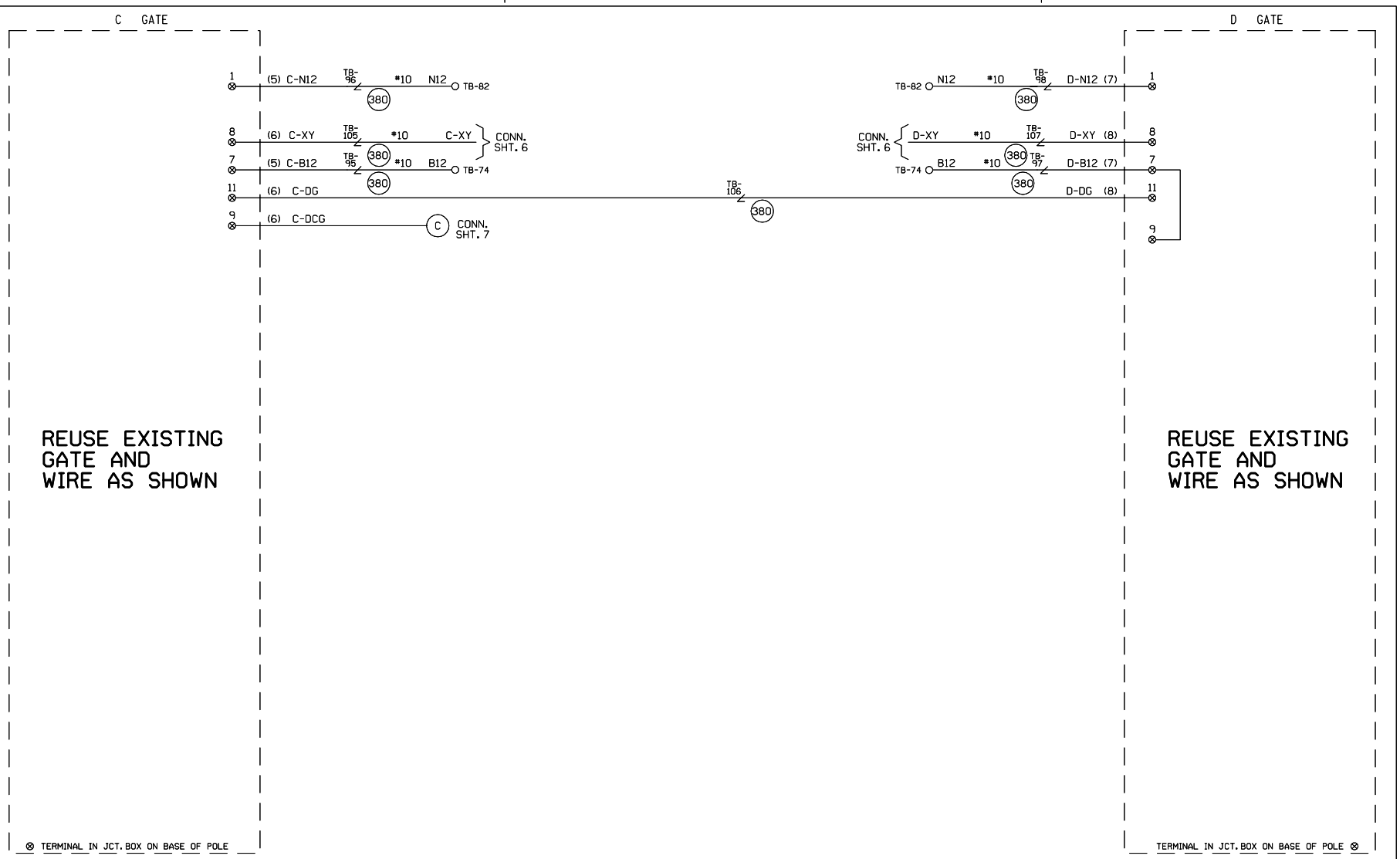

CABLE TABULATION

CABLE NO. 5 5C. NO.6 U.G.B.T.
CABLE NO. 6 7C. NO.14 U.G.B.T.
CABLE NO. 7 5C. NO.6 U.G.B.T.
CABLE NO. 8 7C. NO.14 U.G.B.T.

NEW SHEET

GLEN ELLYN, ILLINOIS
MAIN STREET
M.P. 22.50
GENEVA SUBDIVISION
D.O.T.#174 950A

1	06-16-08 INSTALL HALF BLOCK SYSTEM FROM COLLEGE AVE. TO LOMBARD, ILL. PHASE 2 PART 2. (MP. 23.76 TO MP. 20.41) AFE #89952 JJL / /CTC/MDF	MODIFICATION LEVEL		UNION PACIFIC QUALITY PRODUCTIVITY SAFETY SIGNAL DESIGN	DES: CTC
		Q.A. LAST LEVEL CHECKED	DQ		DIG: CTC
		LAST LEVEL MOD THIS TYPICAL	DQ		CHK: JJL
		LAST LEVEL BY DESIGNER	DQ		A.F.E. 89952
		CHANGED FROM TYPICAL?	Y		ID= GEN2250.8X
		mv 02.01.08 4K 4GFTYP.6			

UNION PACIFIC RAILROAD

CHICAGO, ILLINOIS TO
CLINTON, IOWA
C.T.C. CIRCUITS

Office of Sr AVP Engineering - Signal/TCO Omaha, Nebraska

DATE 06-16-08
SHEET 8
DWG 22.50
GEN

SAFETRAN PRODUCTS MODEL "S-20" MECHANISM

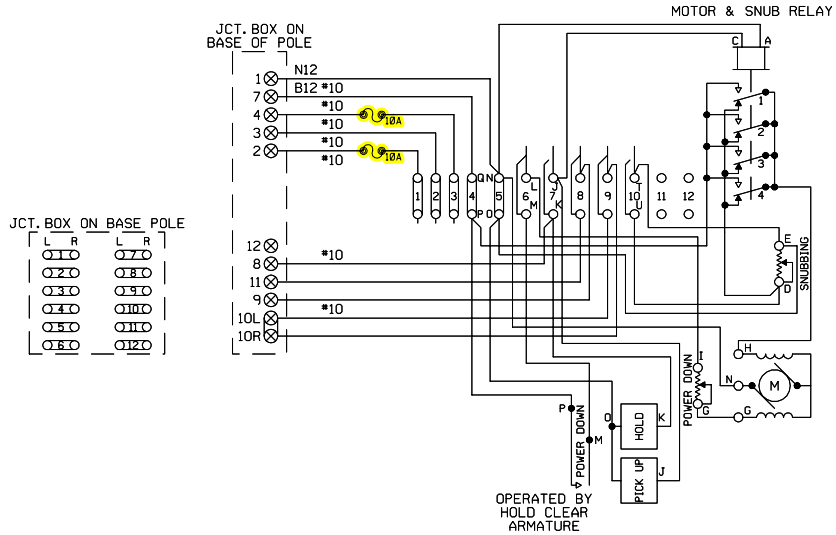

CONT. SPACE NO.	CLEARING (UP)		RETURNING (DN.)		FUNCTION OF CONTACT
	CLOSES	OPENS	CLOSES	OPENS	
6	45°	—	—	45°	POWER DOWN
7	—	89°	89°	—	POWER UP
8	83°	—	—	83°	FLASHING LIGHT (SPARE)
9	5°	—	—	5°	BELL (SPARE)
10	—	5°	5°	—	HORIZONTAL SNUB

MECHANISM SHOWN IN CLEAR POSITION.

INSTALLED

FIELD PLEASE VERIFY GATE MECH. WIRING AND AC PLAN ACCORDINGLY.

FOR WIRING GATES "A", "B", "C", & "D"

= IN

CTC/CJB 06-16-08

REDRAWN

GLEN ELLYN, ILLINOIS
MAIN STREET
M.P. 22.50
GENEVA SUBDIVISION
D.O.T.#174 950A

1	06-16-08
INSTALL HALF BLOCK SYSTEM FROM COLLEGE AVE. TO LOMBARD, ILL. PHASE 2 PART 2. (MP. 23.76 TO MP. 20.41) AFE #89952	JJL
/	/CTC/MDF

UNION PACIFIC
QUALITY PRODUCTIVITY SAFETY
SIGNAL DESIGN

DES:	CTC
DIG:	CTC
CHK:	JJL
A.F.E.	89952
ID= GEN2250.9X	

UNION PACIFIC RAILROAD

CHICAGO, ILLINOIS TO
CLINTON, IOWA
C.T.C. CIRCUITS

Office of Sr AVP Engineering - Signal/TCO Omaha, Nebraska

DATE	06-16-08
SHEET	9
DWG	22.50
	GEN

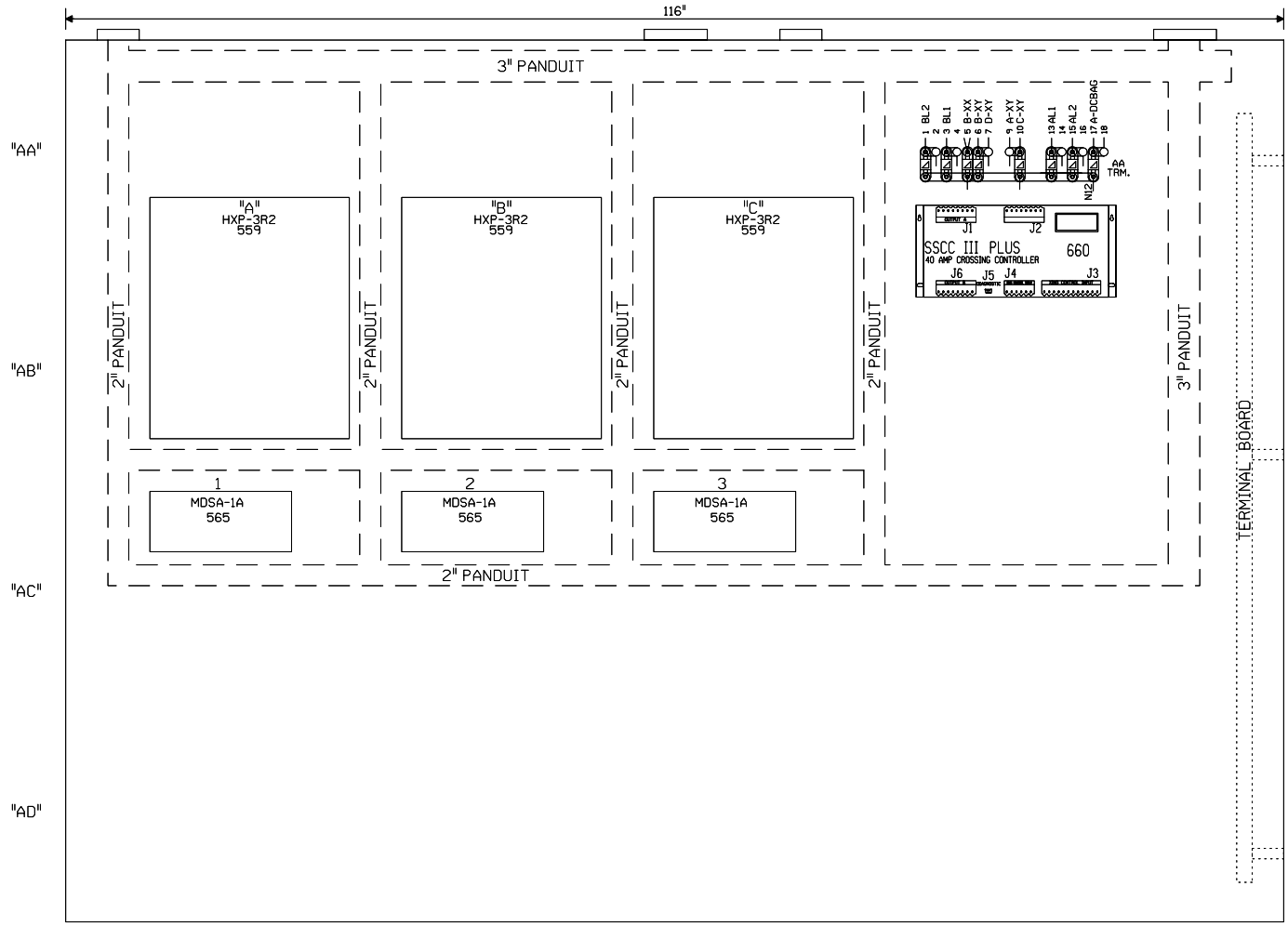

0 1 2 3 4 FEET

SCALE: 1.5 INCHES = 1 FOOT

NEW SHEET
GLEN ELLYN, ILLINOIS
MAIN STREET
M.P. 22.50
GENEVA SUBDIVISION
D.O.T.#174 950A

1	06-16-08
INSTALL HALF BLOCK SYSTEM FROM COLLEGE AVE. TO LOMBARD, ILL. PHASE 2 PART 2. (MP. 23.76 TO MP. 20.41) AFE #89952	
/	/CTC/MDF

UNION PACIFIC
QUALITY PRODUCTIVITY SAFETY
SIGNAL DESIGN

DES:	CTC
DIG:	CTC
CHK:	JJL
A.F.E.	89952
ID= GEN2250.10X	

UNION PACIFIC RAILROAD

CHICAGO, ILLINOIS TO
CLINTON, IOWA
C.T.C. CIRCUITS

Office of Sr AVP Engineering - Signal/TCO Omaha, Nebraska

DATE	06-16-08
SHEET	10
DWG	22.50
	GEN

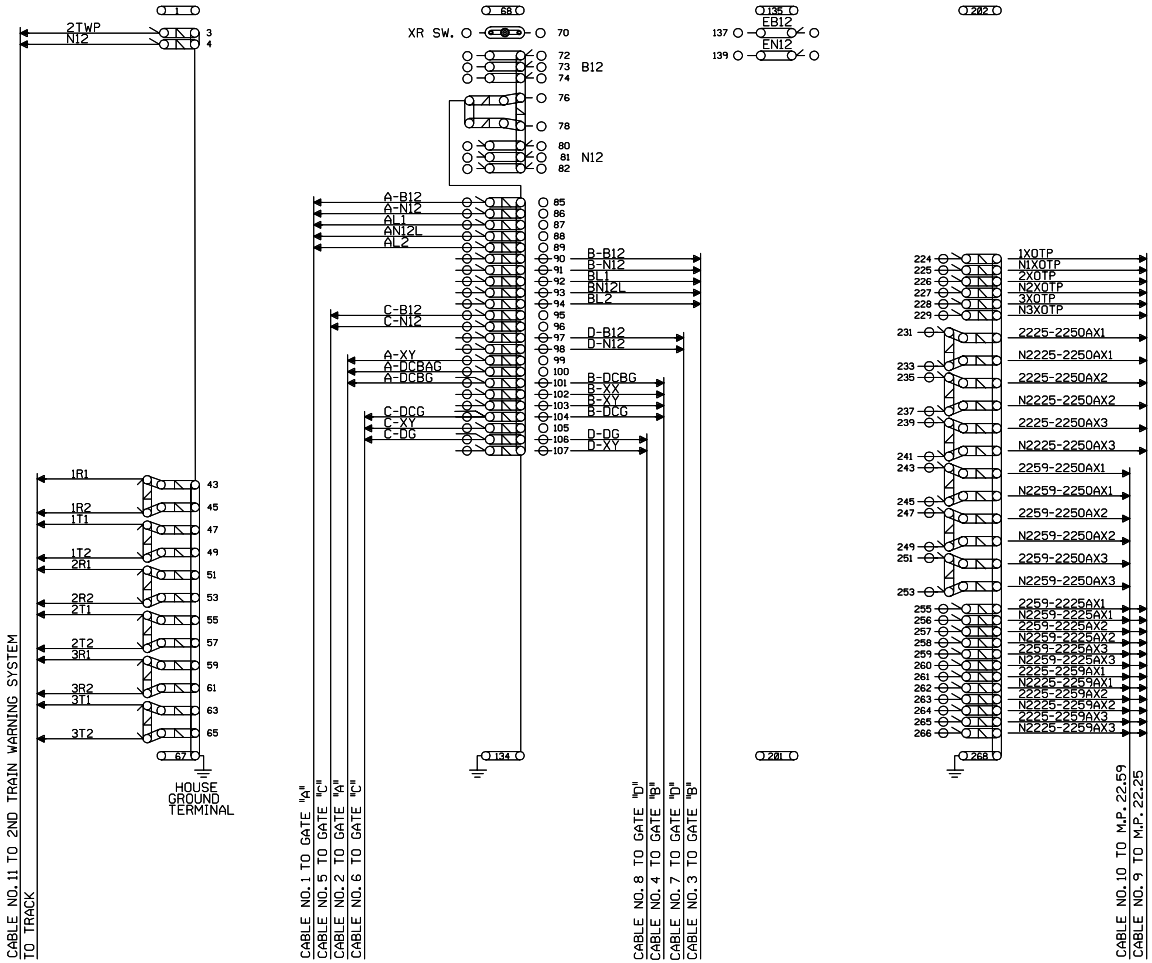

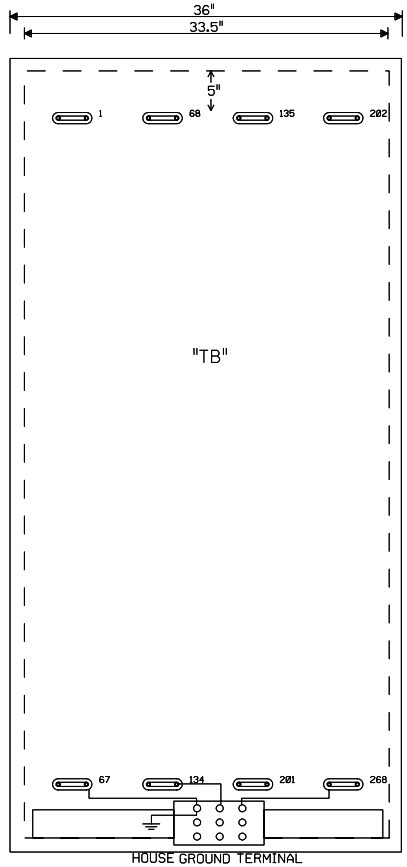

NEW SHEET
GLEN ELLYN, ILLINOIS
MAIN STREET
M.P. 22.50
GENEVA SUBDIVISION
D.O.T.#174 950A

1	06-16-08
INSTALL HALF BLOCK SYSTEM FROM COLLEGE AVE. TO LOMBARD, ILL. PHASE 2 PART 2. (MP. 23.76 TO MP. 20.41) AFE #89952	
/	/CTC/MDF

MODIFICATION LEVEL	
O.A. LAST LEVEL CHECKED	DQ
LAST LEVEL MOD THIS TYPICAL	DQ
LAST LEVEL BY DESIGNER	DQ
CHANGED FROM TYPICAL?	Y
rev 02/01/08 MICROEEOS.15	

UNION PACIFIC
QUALITY PRODUCTIVITY SAFETY
SIGNAL DESIGN

DES:	CTC
DIG:	CTC
CHK:	JJL
A.F.E.	89952
ID= GEN2250.11X	

UNION PACIFIC RAILROAD

CHICAGO, ILLINOIS TO
CLINTON, IOWA
C.T.C. CIRCUITS

Office of Sr AVP Engineering - Signal/TCO Omaha, Nebraska

DATE	06-16-08
SHEET	11
DWG	22.50
	GEN

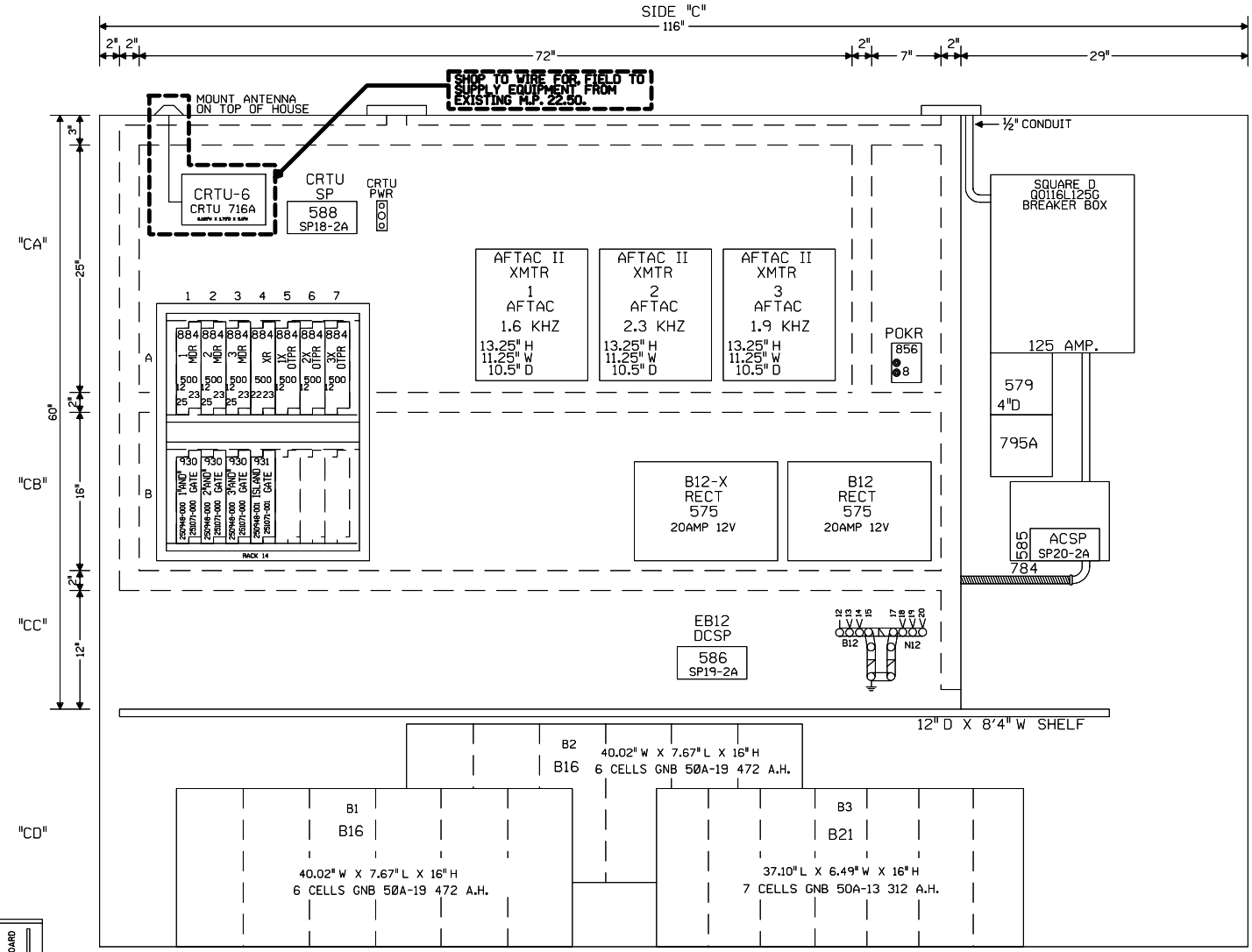

PLAN VIEW
8'×10' HOUSE
—NO SCALE—

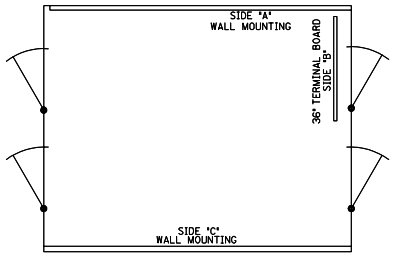

0 1 2 3 4 FEET

SCALE: 1.5 INCHES = 1 FOOT

NEW SHEET
GLEN ELLYN, ILLINOIS
MAIN STREET
M.P. 22.50
GENEVA SUBDIVISION
D.O.T.#174 950A

1	06-16-08
INSTALL HALF BLOCK SYSTEM FROM COLLEGE AVE. TO LOMBARD, ILL. PHASE 2 PART 2. (MP. 23.76 TO MP. 20.41) AFE #89952	
/	/CTC/MDF

UNION PACIFIC
QUALITY PRODUCTIVITY SAFETY
SIGNAL DESIGN

DES:	CTC
DIG:	CTC
CHK:	JJL
A.F.E.	89952
ID= GEN2250.12X	

UNION PACIFIC RAILROAD

CHICAGO, ILLINOIS TO
CLINTON, IOWA
C.T.C. CIRCUITS

Office of Sr AVP Engineering - Signal/TCO Omaha, Nebraska

DATE	06-16-08
SHEET	12
DWG	22.50
	GEN

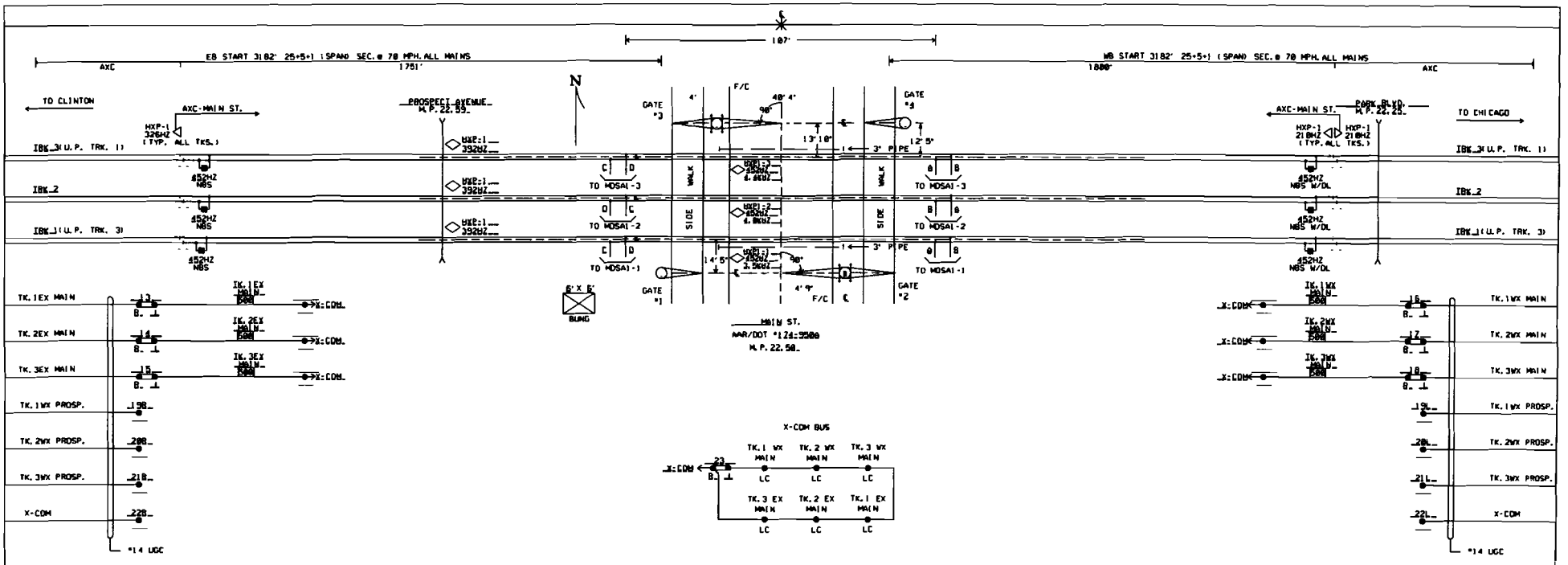

GENEVA SUBDIVISION

DLD M.P. =22.42

REVISIONS	
DRAW - M.R.S. DATE - 10/13/88 AFE - 97696 FILE - 24-64-7 DRAWN ACCT. INSTALL CONSTANT WARNING DEVICES & ECU GLEN ELLYN TO WHEATON, IL.	
REV. PER FC BY RVT DATED 3-6-90 ACCT. INSTALL MOTION	
9-26-93 REV. PER FC BY T.Z. DATED 8-27-93 ACCT. OF JOINTS INSTALLED AT PARK BLVD. & XING CIRCUITS REARRANGED ACCORDINGLY. IN SERVICE 6-91	JEP
REV. 9-15-95 INSTALL BI-DIR SIGNALLING "HAP" TO "NI" 11-7-94	TPZ/HAR/COM
REV. 2-21-97 FC TO FILTER OPERATING BATTS. PER AC 2-3-97	JJD/COL
REV. 2-27-98 ADDED DIMENSIONAL INFORMATION FURNISHED BY FIELD AND REVISED TO SHOW ALL LOCATIONS WITHIN XING APPROACHES ON XING FRT. SHT. PER U.P. STANDARDS. 5-20-97	C.DB/WITT/.DAM
REV. 6-12-82 CHG 12/48 RECT. ADDED REC. #10415 2-28-82	AC/WITT
REV. 4-14-83 CHANGED BATTERY TYPE. REC. #11423 1-28-83	AMW/WITT
REV. 7-2-83 INSTALLED CRTU. W.O. #3327, REC. #11779 5-23-83	11/DAV/WITT/EMB.
4 REV. 01-31-85 REMOVED GLEN ELLYN PED. XING PER AC. REC. #13691 09-26-85	11/DAV/WITT/EMB.
10 REV. 09-26-87 U.P.S. CHANGED JOB CROSSINGS ZERO AC. U.P.R.R. - AC. 27.54 REC. #14239 06-01-87	11/DAV/HST
	JJD/WST

MATCH TO: GEN02250.00C

MATCH TO: GEN2225.1X

UNION PACIFIC

SAFETY SIGNAL DESIGN

GLEN ELLYN, IL.
MAIN ST.
M.P. 22.50

ID=GEN2250.1X
OLD ID=GEN02242.00C

SYSTEMBTIME888888

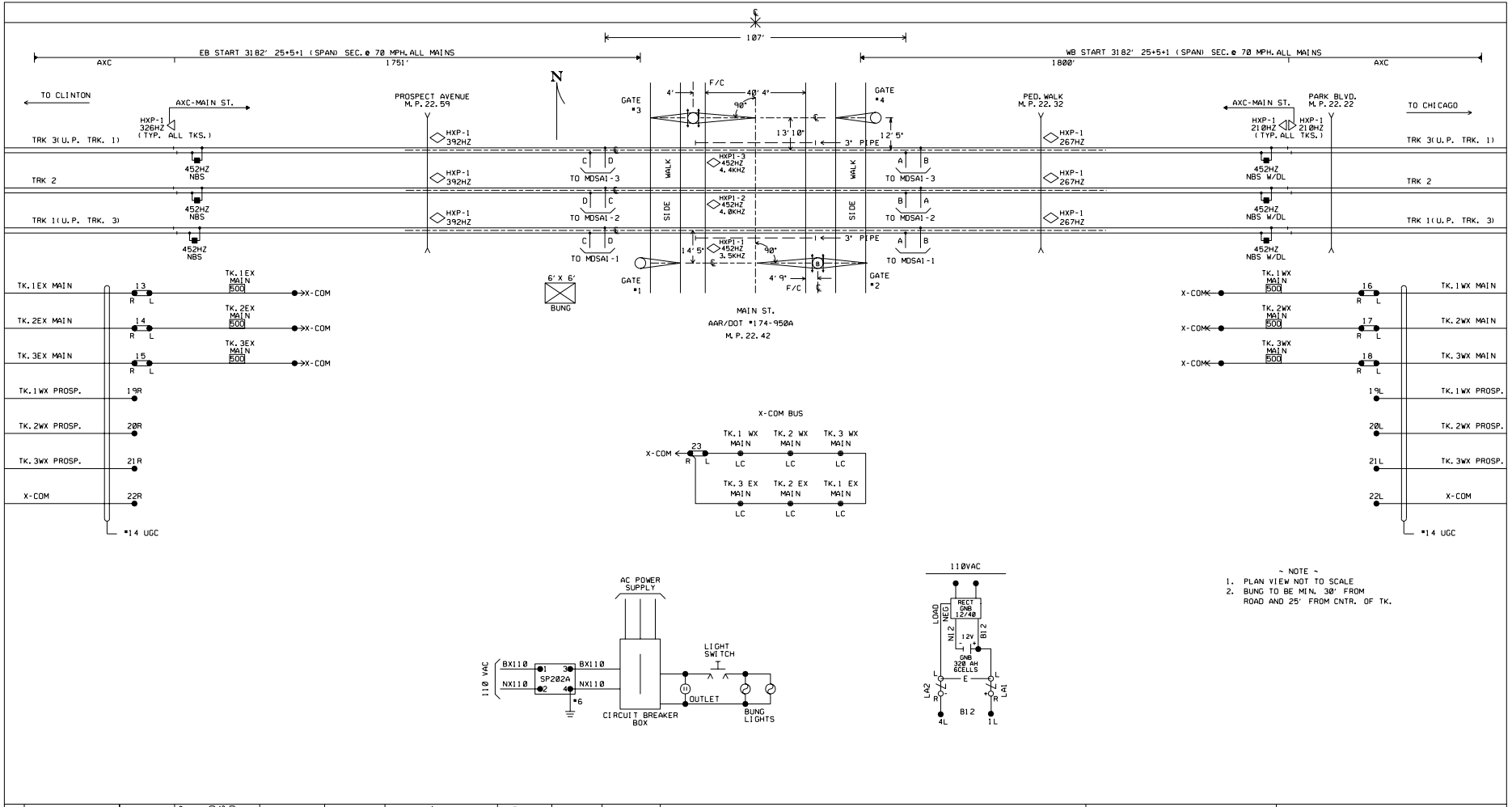

~ NOTE ~

1. PLAN VIEW NOT TO SCALE
2. BUNG TO BE MIN. 30' FROM ROAD AND 25' FROM CNTR. OF TK.

REVISIONS

DRWN : M.R.S.
DATE : 05/03/88
AFE # 87896
FILE # 24-64-7
DRAWN ACCT. INSTALL CONSTANT WARNING DEVICES & ECU GLEN ELLYN TO WHEATON, IL.

REV. PER FC BY RWT DATED 3-6-90 ACCT. INSTALL MOTION 9-20-90 SJS

9-28-93 JEP REV. PER FC BY T.Z. DATED 8-27-93 ACCT. OF JOINTS INSTALLED AT PARK BLVD. & XING CIRCUITS REARRANGED ACCORDINGLY. IN SERVICE 6-91

REV. 9-15-95 INSTALL BI-DIR SIGNALLING 'HMF' TO 'NI' 11-7-94 TPZ/HAR/CDM

REV. 2-21-97 FC TO FILTER OPERATING BATTS. PER AC 2-3-97 JJD/CDL

REV. 2-27-98 ADDED DIMENSIONAL INFORMATION FURNISHED BY FIELD AND REVISED TO SHOW ALL LOCATIONS WITHIN XING APPROACHES ON XING FRT. SHT. PER U.P. STANDARDS. 5-20-97 CJB/WITT/JNM

REV. 6-12-02 GNB 12/40 RECT. ADDED REC. #10415 3-28-02 KC/WITT

REV. 4-14-03 CHANGED BATTERY TYPE. REC. #11423 1-28-03 AMH/WITT

REV. 7-2-03 INSTALLED CRTU. W.O. #3327 REC. #11779 5-23-03 JJD/WITT/WITT/EML

UNION PACIFIC
QUALITY PRODUCTIVITY SAFETY
SIGNAL DESIGN

GLEN ELLYN, IL.
MAIN ST.
M.P. 22.42

MATCH TO: GEN02259.00C

GEN02242.00C

MATCH TO: GEN02232.00C

SYSTEM$TIME$$$$$$

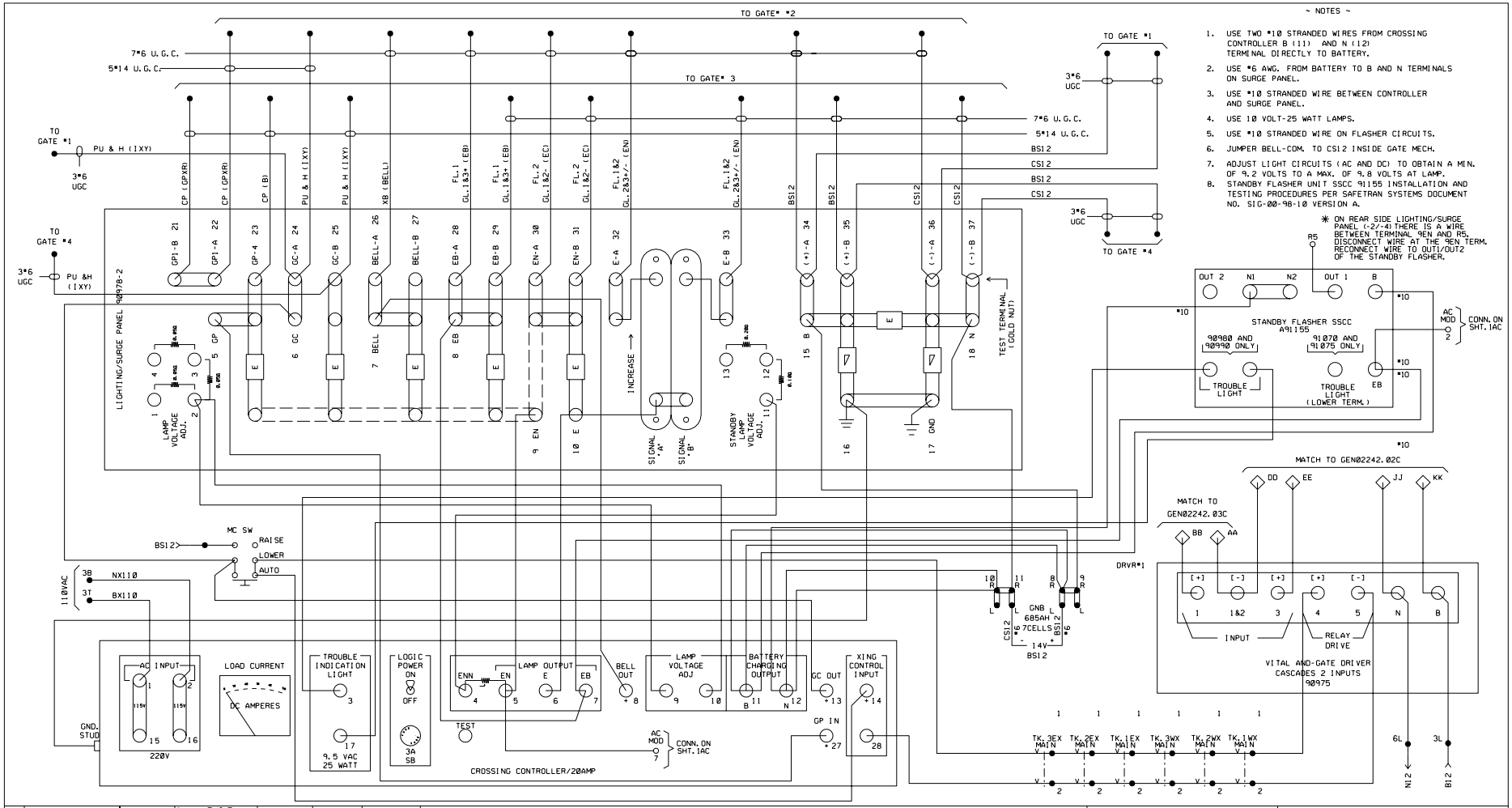

~ NOTES ~

1. USE TWO *10 STRANDED WIRES FROM CROSSING CONTROLLER B (11) AND N (12) TERMINAL DIRECTLY TO BATTERY.
2. USE *6 AWG. FROM BATTERY TO B AND N TERMINALS ON SURGE PANEL.
3. USE *10 STRANDED WIRE BETWEEN CONTROLLER AND SURGE PANEL.
4. USE 10 VOLT-25 WATT LAMPS.
5. USE *10 STRANDED WIRE ON FLASHER CIRCUITS.
6. JUMPER BELL-COM. TO CS12 INSIDE GATE MECH.
7. ADJUST LIGHT CIRCUITS (AC AND DC) TO OBTAIN A MIN. OF 9.2 VOLTS TO A MAX. OF 9.8 VOLTS AT LAMP.
8. STANDBY FLASHER UNIT SSCC 91155 INSTALLATION AND TESTING PROCEDURES PER SAFETRAN SYSTEMS DOCUMENT NO. SIG-00-98-10 VERSION A.

* ON REAR SIDE LIGHTING/SURGE PANEL (-2/-4) THERE IS A WIRE BETWEEN TERMINAL 9EN AND R5. DISCONNECT WIRE AT THE 9EN TERM. RECONNECT WIRE TO OUT1/OUT2 OF THE STANDBY FLASHER.

REVISIONS

DRWN : M.R.S.
DATE : 05/03/88
AFE # 87896
FILE # 24-64-7
DRAWN ACCT. INSTALL CONSTANT WARNING DEVICES & ECU GLEN ELLYN TO WHEATON, IL.

REV. PER FC BY RWT DATED 3-6-90 ACCT. INSTALL MOTION 9-20-90 SJS

9-28-93 JEP
REV. PER FC BY T.Z. DATED 8-27-93 ACCT. OF JOINTS INSTALLED AT PARK BLVD.& XING CIRCUITS REARRANGED ACCORDINGLY. IN SERVICE 6-91

REV. 2-21-97
FC TO FILTER OPERATING BATTS. PER AC 2-3-97
JJO/COL

REV. 4-14-03
CHANGED BATTERY TYPE. REC.#11423
1-28-03
AMH/WITT

REV. 7-2-03
INSTALLED CRTU. W.O.#3327
REC. #11779
5-23-03
JJO/WITT/WITT/EML

UNION PACIFIC
QUALITY PRODUCTIVITY
SAFETY
SIGNAL DESIGN

GLEN ELLYN, IL.
MAIN ST.
M.P. 22.42

GEN02242.01C

SYSTEM$TIME$$$$$$

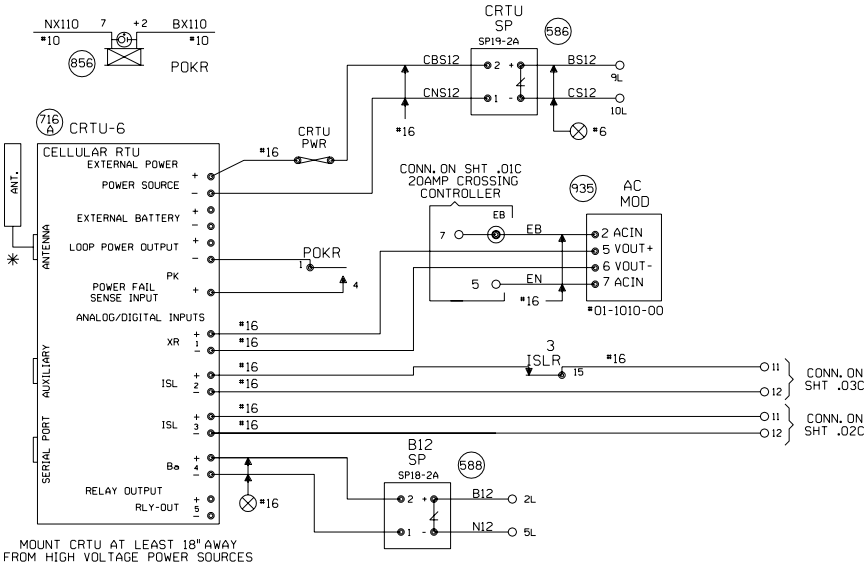

NOTES:

ALL DIODES 1N5060 OR 1N4004 UNLESS OTHERWISE NOTED.

MOUNT ANTENNA ON TOP OF HOUSE.

ALL WIRES #18 UNLESS OTHERWISE NOTED.

ALL UNUSED 'NC' INPUTS MUST BE TIED HIGH TO BATTERY

ALL UNUSED ANALOG INPUTS MUST BE TIED HIGH TO BATTERY

ALL UNUSED 'NO' INPUTS MUST BE DISCONNECTED

ANALOG AND AC INPUT MODULES MUST BE MOUNTED LESS THAN 12" FROM CRTU

CRTU FRONT PANEL DISPLAY CHART INDICATES NORMAL STATE

■ DIGITAL INPUT HIGH, OR POWER FAIL INPUT CLOSED

□ DIGITAL INPUT LOW, OR POWER FAIL INPUT OPEN

NORMAL STATE FOR ANALOG CHANNELS IS EQUAL TO THE STORED NOMINAL VOLTAGE +120% OR -81%

□ ■ L ← LATCH IS SET BECAUSE CRTU DETECTED AN ALARM CONDITION

12.06V L

'sRUN MODE' 'sRUN MODE-SILENT'

CRTU RADIO IS DISABLED. REPROGRAM CRTU WITH LAPTOP.

⊗ FIELD VERIFY CONNECTIONS TO STANDBY FLASHER SSCC

UNIT INSTALLATION AND SETUP

R.R. SITE ID WHERE: SSSS = 4 CHARACTER SUBDIVISION ID. FILL WITH PRECEDING ZEROS AS REQUIRED. THE MAIN TRACK SUBDIVISION ID* IS IN THE CURRENT TIMETABLE. INDUSTRIAL LEADS, LEASED, AND LEAD TRACKS LISTED WITHIN THE SUBDIVISION MAY HAVE THEIR OWN UNIQUE SUBDIVISION ID*. ALWAYS REFER TO CURRENT PRINTED COPY OF THE TIMETABLE.
LLLLLLLL = 8 CHARACTERS USE DOT* AT CROSSINGS, AND
WDLLLLLL = USE 'WD' THEN MP* AT WAYSIDE LOCATIONS.
EXAMPLE = 0785WD1801.5UT
HBLLLLLL = USE 'HB' THEN MP* AT HBD SITES.
EXAMPLE = 0100-HB55.62TX
THE MP* MUST USE A DECIMAL POINT TO SEPARATE NUMBERS. FILL WITH PRECEDING DASHES AS REQUIRED.
AA = 2 CHARACTER STATE NAME FOR ALL LOCATIONS. MUST BE 14 CHARACTERS LONG, NO SPACES ALLOWED.

SITE IDENTIFIER: SSSSLLLLLLLLAA	0001-174950AIL
OPERATION TO RESUME:	RUN
SIGNAL STRENGTH dBm	-67dBm
CARRIER ID	00020
FIRMWARE VERSION	2.3.012
BOOT VERSION:	
CMM VERSION:	
SERIAL NUMBER	03-03173-2801
MIN ASSIGNMENT	
ESN: (MICROBURST ONLY)	
CONFIGURATION NET	MICROBURST
SILENCE INTERVAL	60 MINUTES
HEALTHCHECK INTERVAL	EVERY 2 DAYS
ALARM DEFER DELAY	240 MINUTES (4 HOURS)
SIGNAL STATUS	STRONG
SCADANET STATUS	GOOD
CALIBRATION CONSTANT CH1	
CALIBRATION CONSTANT CH2	
CALIBRATION CONSTANT CH3	
CALIBRATION CONSTANT CH4	13.52
CALIBRATION CONSTANT PS	15.15

FIELD PROVIDES: SAMPLED NOMINAL VOLTAGES, SCADANET STATUS CALIBRATION CONSTANTS, SERIAL NUMBER, AND SIGNAL STATUS.

CHANNEL SETUP - STANDARD CONFIGURATION 11:XR,ISL,ISL,Ba

CHANNEL NORMAL STATE	SENSE (NO/NC)	NAME FUNCTION	RECOGNITION DELAY SECONDS ACTIVE	RECOGNITION DELAY SECONDS NORMAL	RETURN TO NORMAL	REPORTING MODE	ALARM LINKED CHANNEL	ALARM LINKED CRITERIA	EVENT LOGGING ENABLED OPTIONS
POWER FAIL (CH5) ■	POWER FAIL DETECT NO	PF:n-PK AC POWER FAIL	7.200 ALARM	300 NORMAL	ENABLED	ALERT	DISABLED	N/A	
CH1 □ ■	DIGITAL INPUT NO	CH1-XR XR DOWN TO LONG	1.800 ALARM	1 NORMAL	ENABLED	ALERT	DISABLED	N/A	
CH2 ■ □	DIGITAL INPUT NC	CH2-ISL ISLONLY ISLAND OCCUPIED DAX, PREEMPT WARNING TIME	1 ACTIVE	1 NORMAL	DISABLED	STATUS ONLY	DISABLED	N/A	
CH3 ■ □	DIGITAL INPUT NC	CH3-ISL ISLAND OCCUPIED DAX, PREEMPT WARNING TIME	1 ACTIVE	1 NORMAL	DISABLED	STATUS ONLY	DISABLED	N/A	DIGITAL EVENTS
CH4 STORED NOMINAL VOLTAGE	ANALOG INPUT N/A	CH4-Ba/V BATTERY MONITOR BATTERY LOW	600 ALARM	1200 NORMAL	ENABLED	ALERT W/UPDATE	DISABLED	N/A	CH1-XR CH2-ISL CH3-ISL
POWER SOURCE (CH6)	ANALOG INPUT N/A	PS-Ba/V BATTERY MONITOR BATTERY LOW	600 ALARM	1200 NORMAL	ENABLED	ALERT W/UPDATE	DISABLED	N/A	

ANALOG CHANNEL	USEFUL RANGE VOLTS LOW	USEFUL RANGE VOLTS HIGH	DISPLAYED RANGE VOLTS LOW	DISPLAYED RANGE VOLTS HIGH	RELATIVE ALARM POINT LOW	RELATIVE ALARM POINT HIGH	ABSOLUTE ALARM POINT LOW	ABSOLUTE ALARM POINT HIGH	AUTOMATIC UPDATE INTERVAL	STORED NOMINAL VOLTAGE	SAMPLED NOMINAL VOLTAGE
CH4	0.0	30.00	0.0	30.00	81%	120%	10.0	29.0	14 DAYS	12.69	
POWER SOURCE	0.0	30.00	0.0	30.00	81%	120%	10.0	29.0	14 DAYS	12.69	
RELAY OUTPUT	NAME RLY-OUT		ACTIVE SET-UP-OPEN		NORMAL CLR-DN-CLOSE		PULSE DURATION		15 SECONDS	StdCfg Ver: 2.3.3 REV'D 9-20-02	

MAINTENANCE OPERATIONS

TO START OR ABORT ANY PROCEDURE

1. PRESS THE 'CANCEL' BUTTON FIRST

WHEN RESPONDING TO A CALL, PUT THE CRTU IN THE 'SILENCE ALARMS' MODE

1. PRESS 'SELECT' AND THEN '+ ARROW' BUTTON UNTIL
   DISPLAY: ACTION?
   SILENCE ALARMS
2. PRESS THE 'SELECT' BUTTON TWICE
3. CORRECT PROBLEM AND SIMULATE NORMAL TRAIN MOVEMENT THROUGH THE LOCATION
4. EXAMINE EACH CHANNEL ON THE CRTU
5. PRESS THE '+/- ARROW' BUTTON VERIFY ALL CHANNELS INDICATE A NORMAL STATE

NORMAL STATES ARE ON THE CHANNEL SETUP CHART

CLEAR TIMERS, LATCHES AND SEND ALL NORMAL

1. DO STEPS #1 - #5 ABOVE, AND PRESS 'CANCEL'.
2. PRESS 'SELECT' AND THEN '- ARROW' BUTTON UNTIL
   DISPLAY: ACTION?
   SERVICE MODE
3. PRESS 'SELECT' AGAIN TO RESET TIMERS, AND IF
   DISPLAY: SERVICE MODE
   ALL NORMAL
4. PRESS 'SELECT' AGAIN TO CLEAR LATCHES, AND SEND ALL NORMAL. SKIP STEPS #5-#6.
5. HOWEVER, IF ALARMS ARE NOT CLEARED:
   DISPLAY: SERVICE MODE
   ALARMS PENDING/PRESENT
6. PRESS 'CANCEL', CORRECT PROBLEM AND REPEAT STEPS #2 THRU #5 UNTIL ALL NORMAL SENT.

TO CANCEL THE 'SILENCE ALARMS' MODE

1. PRESS 'SELECT' AND THEN '+ ARROW' BUTTON UNTIL
   DISPLAY: ACTION?
   CANCEL SILENCE
2. PRESS THE 'SELECT' BUTTON AGAIN

EXAMINE & SET BATTERY VOLTAGE NOMINAL VALUE

1. PRESS THE '+ ARROW' OR '- ARROW' BUTTON UNTIL THE DESIRED CHANNEL IS DISPLAYED.
   DISPLAY: PS-Ba:
   13.83V NORMAL
2. VERIFY THE DISPLAYED READING WITH A DIGITAL VOLTMETER
3. PRESS THE 'SELECT' BUTTON, AND THE CRTU DISPLAY WILL SWITCH BETWEEN CURRENT/SAVED NOMINAL VOLTAGE VALUES.
   DISPLAY: NOMINAL ON #6? (CURRENT)
   13.83
   DISPLAY: SAVED NOMINAL 6 (STORED)
   12.69
4. PRESS THE 'SELECT' BUTTON AND THE CURRENT OR 'NOMINAL ON' VALUE WILL BE SAMPLED AND STORED AS THE 'SAVED NOMINAL' VALUE
5. VERIFY THE 'NOMINAL ON' AND 'SAVED NOMINAL' VALUES ARE EQUIVALENT, REPEAT STEPS #1 THRU #3 & PRESS THE 'CANCEL' BUTTON.

GLEN ELLYN, ILLINOIS
MAIN STREET
M.P. 22.42
GENEVA SUBDIVISION
D.O.T.#174 950A
PROJ.#

REV. 7-2-03
INSTALLED CRTU.
REC. #11779
I.S. 5-23-03
JJO/WITT/WITT/EML

MODIFICATION LEVEL	
Q.A. LAST LEVEL CHK'D.	
LAST LEVEL MOD. THIS TYP.	
LAST LEVEL BY DESIGNER.	
CHANGED FROM TYP.? Y/N	

UNION PACIFIC
QUALITY PRODUCTIVITY SAFETY
SIGNAL DESIGN

DES: WITT IND
DIG: WITT IND
CHK: EML
A.F.E. 3327
ID: GEN02242.1AC

UNION PACIFIC RAILROAD
CHICAGO, ILLINOIS TO
CLINTON, IOWA
C.T.C. CIRCUITS
OFFICE OF CHIEF ENG'R OMAHA NEBR.

DATE 11-01-01
SHEET 1AC
DWG 22.42
GEN

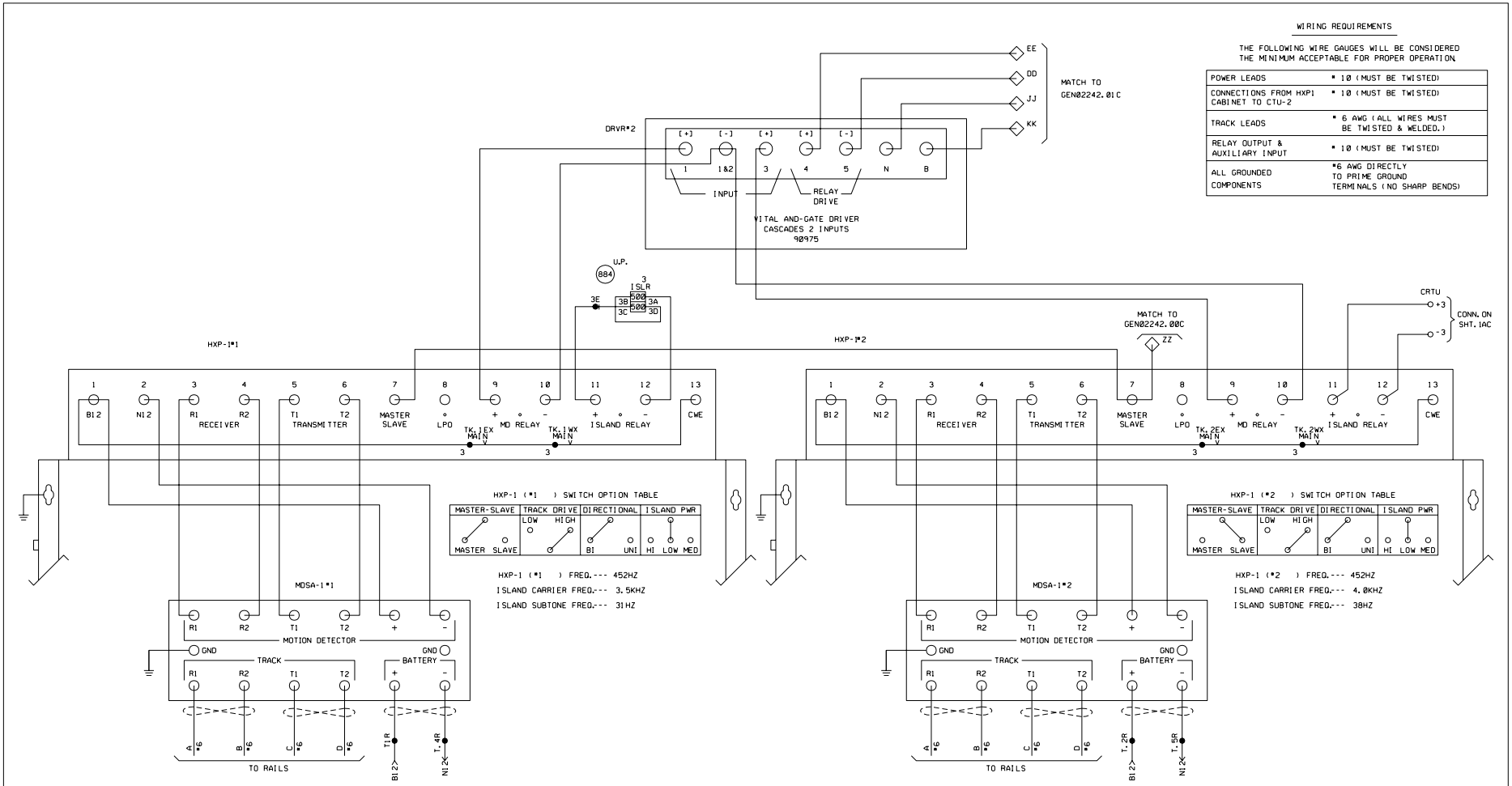

WIRING REQUIREMENTS

THE FOLLOWING WIRE GAUGES WILL BE CONSIDERED THE MINIMUM ACCEPTABLE FOR PROPER OPERATION.

POWER LEADS	# 10 (MUST BE TWISTED)
CONNECTIONS FROM HXP1 CABINET TO CTU-2	# 10 (MUST BE TWISTED)
TRACK LEADS	# 6 AWG (ALL WIRES MUST BE TWISTED & WELDED.)
RELAY OUTPUT & AUXILIARY INPUT	# 10 (MUST BE TWISTED)
ALL GROUNDED COMPONENTS	#6 AWG DIRECTLY TO PRIME GROUND TERMINALS (NO SHARP BENDS)

REVISIONS

DRWN : M.R.S.
DATE : 05/03/88
AFE # 87896
FILE # 24-64-7
DRAWN ACCT. INSTALL CONSTANT WARNING DEVICES & ECU GLEN ELLYN TO WHEATON, IL.

REV. PER FC BY RWT DATED 3-6-90 ACCT. INSTALL MOTION 9-20-90 SJS

9-28-93 JEP
REV. PER FC BY T.Z. DATED 8-27-93 ACCT. OF JOINTS INSTALLED AT PARK BLVD. & XING CIRCUITS REARRANGED ACCORDINGLY. IN SERVICE 6-91

REV. 9-15-95
INSTALL BI-DIR SIGNALLING "HM" TO "NI"
11-7-94 TPZ/HAR/CDM

REV. 2-27-98
ADDED DIMENSIONAL INFORMATION FURNISHED BY FIELD AND REVISED TO SHOW ALL LOCATIONS WITHIN XING APPROACHES ON XING FRT. SHT. PER U.P. STANDARDS.
5-20-97 CJB/WITT/JNM

REV. 7-2-03
INSTALLED CRTU.
W.O. #3327
REC. #11779
5-23-03 JJD/WITT/WITT/EML

UNION PACIFIC
QUALITY PRODUCTIVITY
SAFETY
SIGNAL DESIGN

GLEN ELLYN, IL.
MAIN ST.
M.P. 22.42

GEN02242.02C

SYSTEM$TIME$$$$$$

WIRING REQUIREMENTS

THE FOLLOWING WIRE GAUGES WILL BE CONSIDERED THE MINIMUM ACCEPTABLE FOR PROPER OPERATION.

POWER LEADS	# 10 (MUST BE TWISTED)
CONNECTIONS FROM HXP1 CABINET TO CTU-2	# 10 (MUST BE TWISTED)
TRACK LEADS	# 6 AWG (ALL WIRES MUST BE TWISTED & WELDED.)
RELAY OUTPUT & AUXILIARY INPUT	# 10 (MUST BE TWISTED)
ALL GROUNDED COMPONENTS	#6 AWG DIRECTLY TO PRIME GROUND TERMINALS (NO SHARP BENDS)

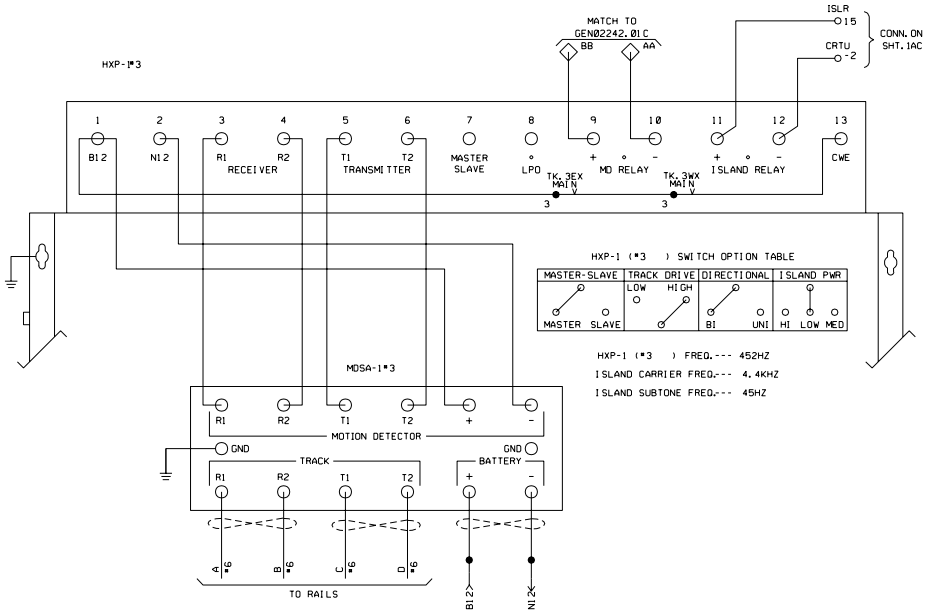

REVISIONS

DRWN : M.R.S.
DATE : 05/03/88
AFE # 87896
FILE # 24-64-7
DRAWN ACCT. INSTALL CONSTANT WARNING DEVICES & ECU GLEN ELLYN TO WHEATON, IL.

REV. PER FC BY RWT DATED 3-6-90 ACCT. INSTALL MOTION 9-20-90 SJS

9-28-93 JEP
REV. PER FC BY T.Z. DATED 8-27-93 ACCT. OF JOINTS INSTALLED AT PARK BLVD. & XING CIRCUITS REARRANGED ACCORDINGLY. IN SERVICE 6-91

REV. 9-15-95
INSTALL BI-DIR SIGNALLING "HM" TO "NI"
11-7-94 TPZ/HAR/CDM

REV. 2-27-98
ADDED DIMENSIONAL INFORMATION FURNISHED BY FIELD AND REVISED TO SHOW ALL LOCATIONS WITHIN XING APPROACHES ON XING FRT. SHT. PER U.P. STANDARDS.
5-20-97 CJB/WITT/JNM

REV. 7-2-03
INSTALLED CRTU.
W.O. #3327
REC. #11779
5-23-03 JJD/WITT/WITT/EML

UNION PACIFIC
QUALITY PRODUCTIVITY
SAFETY
SIGNAL DESIGN

GLEN ELLYN, IL.
MAIN ST.
M.P. 22.42

GEN02242.03C

SYSTEM$TIME$$$$$$