Form 3

(File original and two duplicates)

ORIGINAL

STATE OF ILLINOIS

ILLINOIS COMMERCE COMMISSION

RECEIVED

MAR 16 2009

Illinois Commerce Commission
RAIL SAFETY SECTION

Petition for permission to make a major change in crossing protection, or to install new protection under 92 Illinois Administrative Code 1535.400 (d)

X-12852

T09.0035 Date: FEBRUARY 20, 2009

To the Illinois Commerce Commission:

The petitioner UNION PACIFIC 1749484 shows
(name of railroad company)

(1) That it is a railroad company operating a line of railroad in the State of Illinois.

(2) That petitioner proposes and hereby makes application for authority to make a major change in crossing protection, or to install new protection, under 92 Illinois Administrative Code 1535.400 (d) adopted by this Commission.

(3) That the location of the crossing, the nature of protection now established and proposed to be established, and other pertinent facts in connection therewith, are set forth in the statement attached to and forming part of this petition.

(4) That petitioner's reasons and purpose, with reference to its said proposal are

INSTALLATION OF HALF BLOCK SIGNAL SYSTEM REQUIRING UPGRADES TO CONSTANT WARNING DEVICES AT CROSSING

(State reasons and purpose)

(5) That the facts set forth in this petition and in the statement and plans or plats attached thereto, are, all of them, true and correct to the best of petitioner's knowledge and belief.

WHEREFORE, the petitioner prays that the Commission will, if deemed desirable by the Commission, set the aforesaid matter for hearing, and that the Commission enter an order or adopt a resolution consenting to and granting authority for the making of the said proposed changes in or additions to crossing protection.

UNION PACIFIC RAILROAD
(Railroad Company)

By Thomas R. Andryuk

(Attorney for Petitioner)

(Attorney's Address)

DOCKETED

MAR 16 2009

Statement, attached to and part of an application for permission to make a major change in crossing protection or to install new protection, under 92 Ill. Adm. Code 1535.400 (d).

1. Name of Railroad Company UNION PACIFIC

2. Crossing Number 174 948 Y
(Separate statement should be filed for each crossing)

3. Village or City GLEN ELLYN
(in or near)

4. Name of Street or Highway PARK

5. Public Agency Maintaining Highway _____
(D.O.T., County, Township, City)

6. Protection now established: (Give full description. Indicate the hours of any manual protection.)
GATES AND FLASHING LIGHTS

7. Protection desired: (Give details) UPGRADE OF CONSTANT WARNING DEVICES

8. Number of main tracks 3 Other tracks Ø

9. Number of passenger train movements: 6 a.m. to 6 p.m. 34 6 p.m. to 6 a.m. 18

10. Number of freight train movements: 6 a.m. to 6 p.m. 26 6 p.m. to 6 a.m. 26

11. Approximate number of switch movements: 6 a.m. to 6 p.m. (Yna) 1 6 p.m. to 6 a.m. 3 (Yna)

12. Maximum speed of trains at crossing on each track in each direction 70 MPH

13. Passenger platforms served by tracks within the limits of track circuits, if any GLEN ELLYN STATION

14. Where automatic signals or gates are proposed, approximate number of train or engine movements daily which would cause false indications or operation N/A

15. Nature and approximate amount of street or highway traffic over crossing 9700 AADT

16. In addition to the information listed hereinbefore in Form 3, attach a track plan or plat of the proposed crossing. This plan should show:

(a) Width and surface of highway.
(b) Highway intersections (including private driveways to be so indicated) and location of established highway signs or signals within 100 feet of crossing.
(c) Location of tracks, switches and other railroad facilities such as block signals, etc. within limits of track circuits, present and/or proposed.
(d) Where automatic protection is proposed, show proposed location of signals (side lights, cantilevers, etc., if any).
(e) Show the length of each operating track section within the control limits of the crossing protection and its function.

ADDITIONAL INFORMATION

SEE CIRCUIT PLANS.

VERIFICATION

I, THOMAS N. ANDRYUK, first being duly sworn upon oath depose and say that I am MANAGER of FIELD ENGINEERING of UNION PACIFIC RAILROAD, an DELAWARE corporation; that I have read the above and foregoing petition by me subscribed and know the contents thereof; that said contents are true in substance and in fact, except as to those matters stated upon information and belief, and as to those, I believe same to be true.

UNION PACIFIC RAILROAD
Thomas N. Andryuk

Subscribed and sworn to before me this _____ day of _____ 19_____.

Notary Public, Illinois.

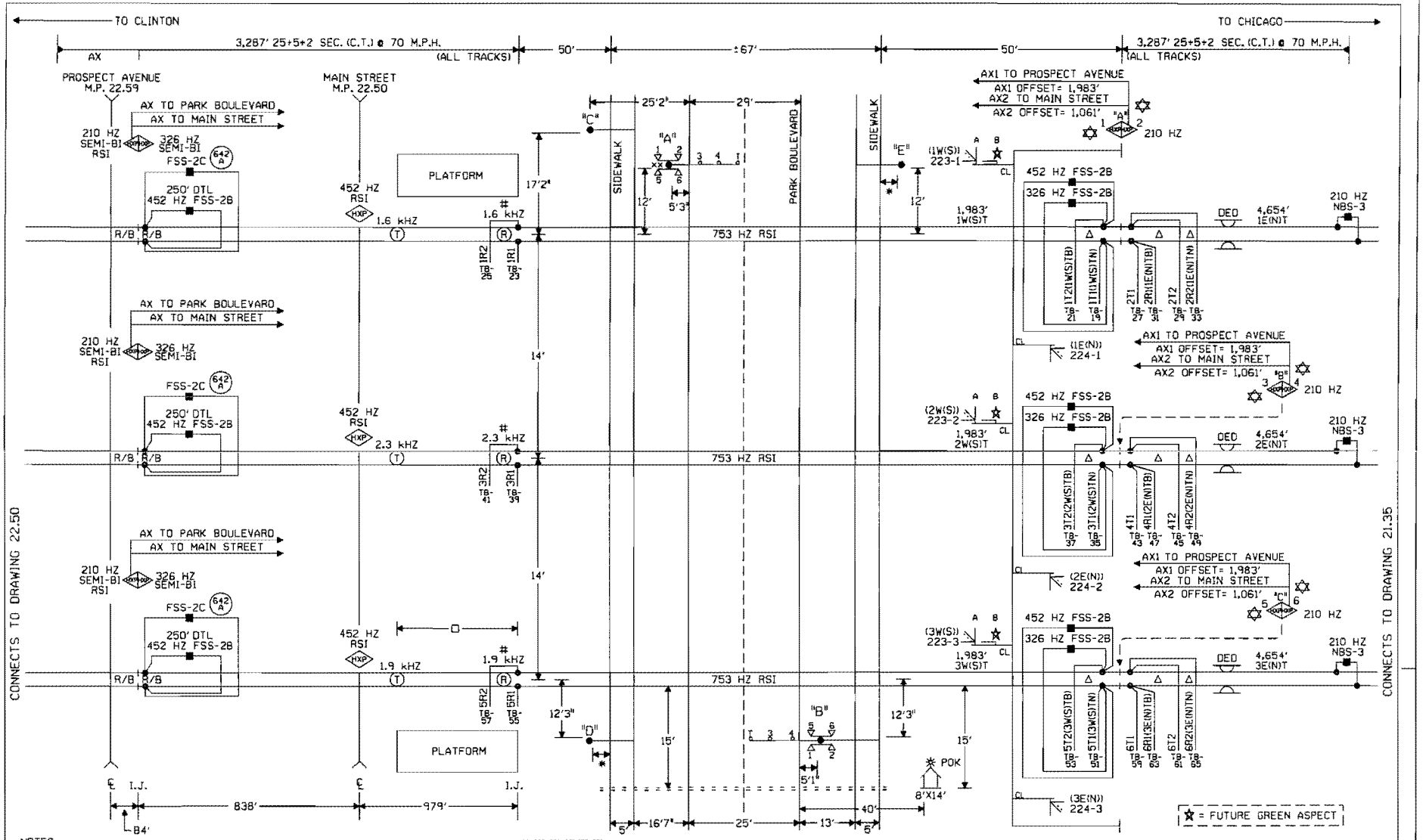

NOTES:

⊗ = TWISTED WIRES INSULATED 1 TWIST PER FT. ALL TRACK WIRES 2C. #6

TRANSMITTER AND RECEIVER LEADS TO BE SEPARATED BY AT LEAST 12" IN TRENCH. LENGTHS SHOULD NOT EXCEED MANUFACTURER'S RECOMMENDATION.

TOP OF FOUNDATION TO BE AT SAME ELEVATION AS THE SURFACE OF THE TRAVELED WAY & NO MORE THAN 4" ABOVE THE SURFACE OF THE GROUND.

ALL BUNGALOW WIRING TO BE #16 AWG FLEX UNLESS OTHERWISE SPECIFIED EXCEPT ALL GROUND WIRE TO BE #6 AWG FLEX OR LARGER.

ALL WIRING IN GATE MECHANISM TO BE #10 "AWG FLEX".

REFER TO UP STANDARD DWG FOR BUNGALOW GROUNDING.

AFTAC NOTES:

1. # = PLACE AFTAC RECEIVER WIRES AT END OF PLATFORM.
2. ADJUST AFTAC RECEIVER TO DE-ENERGIZE WHEN A SHUNT IS PLACED ANYWHERE WITHIN PLATFORM.
3. □ = FIELD PLEASE PROVIDE LENGTH OF AFTAC TRACK CIRCUIT.

PORTABLE GENERATOR EXTENSION CORD FOR 240V TO 240V IS PROVIDED AS WELL AS A 120V TO 240V ADAPTER.

ALL LIGHTS TO BE 12" ROUNDELS.

= = = = = = 4" X 80' CONDUIT

LIGHTS:	LED LIGHTS
GATE A:	16'
GATE B:	18'/14'
GATE C:	16'
GATE D:	5'
GATE E:	5'
CRTU =	MICROBURST

← EXISTING

×× = BELL

☆ = HXP TO OPERATE IN SEMI-BI DIRECTIONAL MODE.

W(S) ←—○—→ E(N)

CONSTRUCTION NOTES:

1. REUSE EXISTING GATES A,B,C,D & E.
2. REUSE EXISTING CRTU AND ANTENNA FROM EXISTING PARK BOULEVARD X-ING HOUSE - M.P. 22.25.
3. ORDER & INSTALL (6)-210HZ NBS-3 TERMINATION SHUNTS (GE P/N: 250896-J02) FOR HXP'S AT THIS LOCATION.
4. * = FIELD PROVIDE MEASUREMENTS.

Δ FIELD ENSURE PROPER TRACK POLARITY AND "AC" ACCORDINGLY

NEW SHEET
GLEN ELLYN, ILLINOIS
PARK BOULEVARD
M.P. 22.25
GENEVA SUBDIVISION
D.O.T.#174 948Y

1	06-16-08	INSTALL HALF BLOCK SYSTEM FROM COLLEGE AVE. TO LONGBOARD, ILL. PHASE 2 PART 2: MP. 23.76 TO MP. 20.41; AFE #89952 JJL /CTC/MDF

MODIFICATION LEVEL	
D. A. LAST LEVEL CHECKED	00
LAST LEVEL MOD THIS TYPICAL	00
LAST LEVEL BY DESIGNER	00
CHANGED FROM TYPICAL?	Y

UNION PACIFIC SIGNAL DESIGN

DES: CTC
DIG: CTC
CHK: JJL
A.F.E. 89952
ID: GEN2225.1X

UNION PACIFIC RAILROAD

CHICAGO, ILLINOIS TO CLINTON, IOWA
C.T.C. CIRCUITS

Office of Sr.AVP Engineering - Signal/TCO Omaha, Nebraska

DATE 06-16-08
SHEET 1
DWG 22.25
GEN

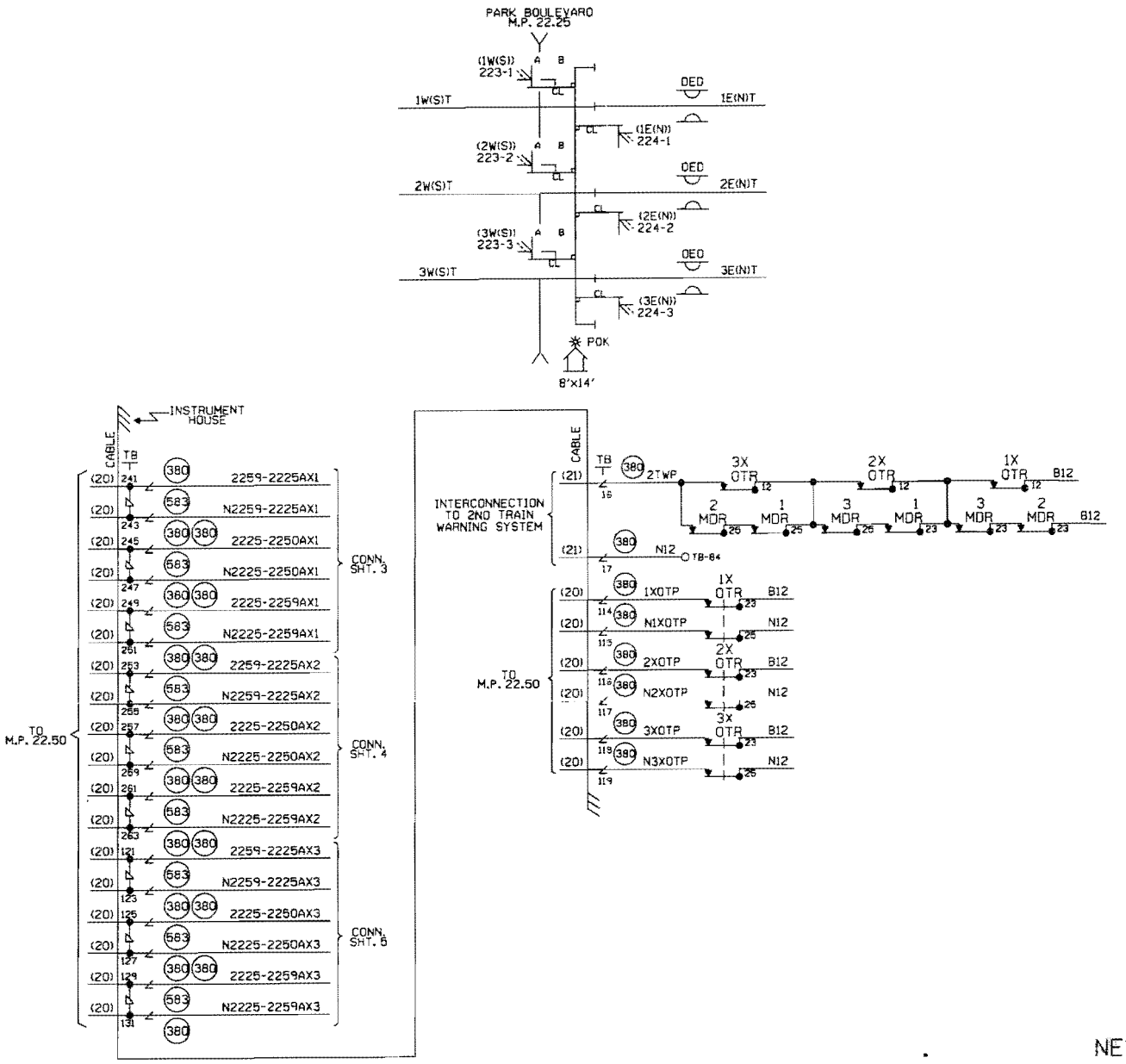

NEW SHEET

GLEN ELLYN, ILLINOIS
PARK BOULEVARD
M.P. 22.25
GENEVA SUBDIVISION
D.O.T.#174 94BY

1 06-16-08 INSTALL HALF BLOCK SYSTEM FROM COLLEGE AVE. TO LOMBARD, ILL. PHASE 2 PART 2. (MP. 23.76 TO MP. 20.41) AFE #89952 J.JL / /CTC/MDF	UNION PACIFIC SAFETY QUALITY PRODUCTIVITY SIGNAL DESIGN	DES: CTC DIG: CTC CHK: JJL A.F.E. 89952 ID: GEN2225.1AX	**UNION PACIFIC RAILROAD** CHICAGO, ILLINOIS TO CLINTON, IOWA C.T.C. CIRCUITS Office of Sr.AVP Engineering - Signal/TCO Omaha, Nebraska	DATE 06-16-08 SHEET 1A DWG 22.25 GEN	

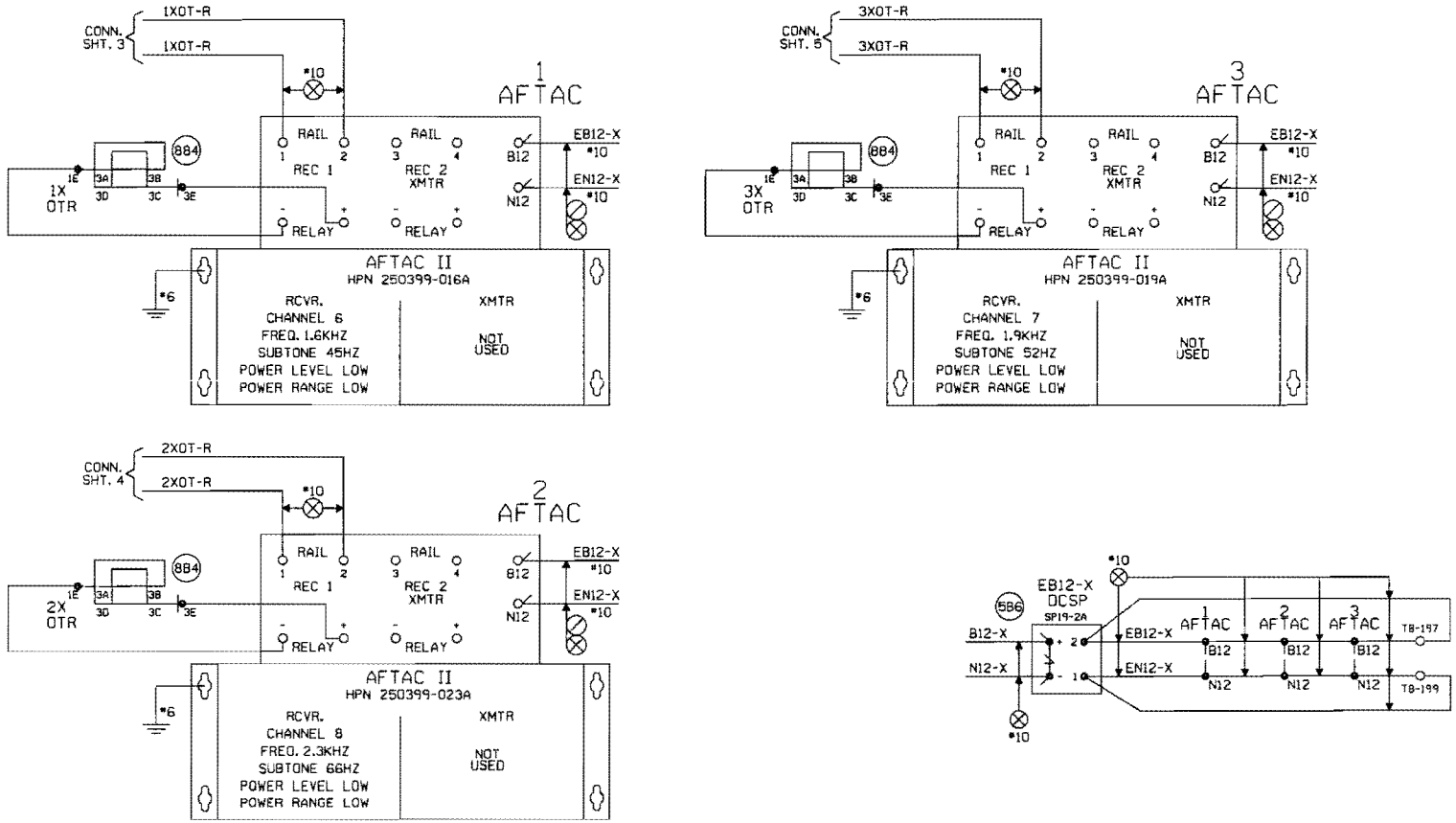

NEW SHEET

GLEN ELLYN, ILLINOIS
PARK BOULEVARD
M.P. 22.25
GENEVA SUBDIVISION
D.O.T.#174 948Y

1 06-16-08 INSTALL HALF BLOCK SYSTEM FROM COLLEGE AVE. TO LOMBARD, ILL. PHASE 2 PART 2. (MP. 23.76 TO MP. 20.41) AFE #89952 JJL /CTC/NDF	UNION PACIFIC QUALITY PRODUCTIVITY SAFETY SIGNAL DESIGN	DES: CTC DIG: CTC CHK: JJL A.F.E. 89952 ID: GEN2225.18X	UNION PACIFIC RAILROAD CHICAGO, ILLINOIS TO CLINTON, IOWA C.T.C. CIRCUITS Office of Sr.AVP Engineering - Signal/TCO Omaha, Nebraska	DATE 06-16-08 SHEET 1B DWG 22.25 GEN	

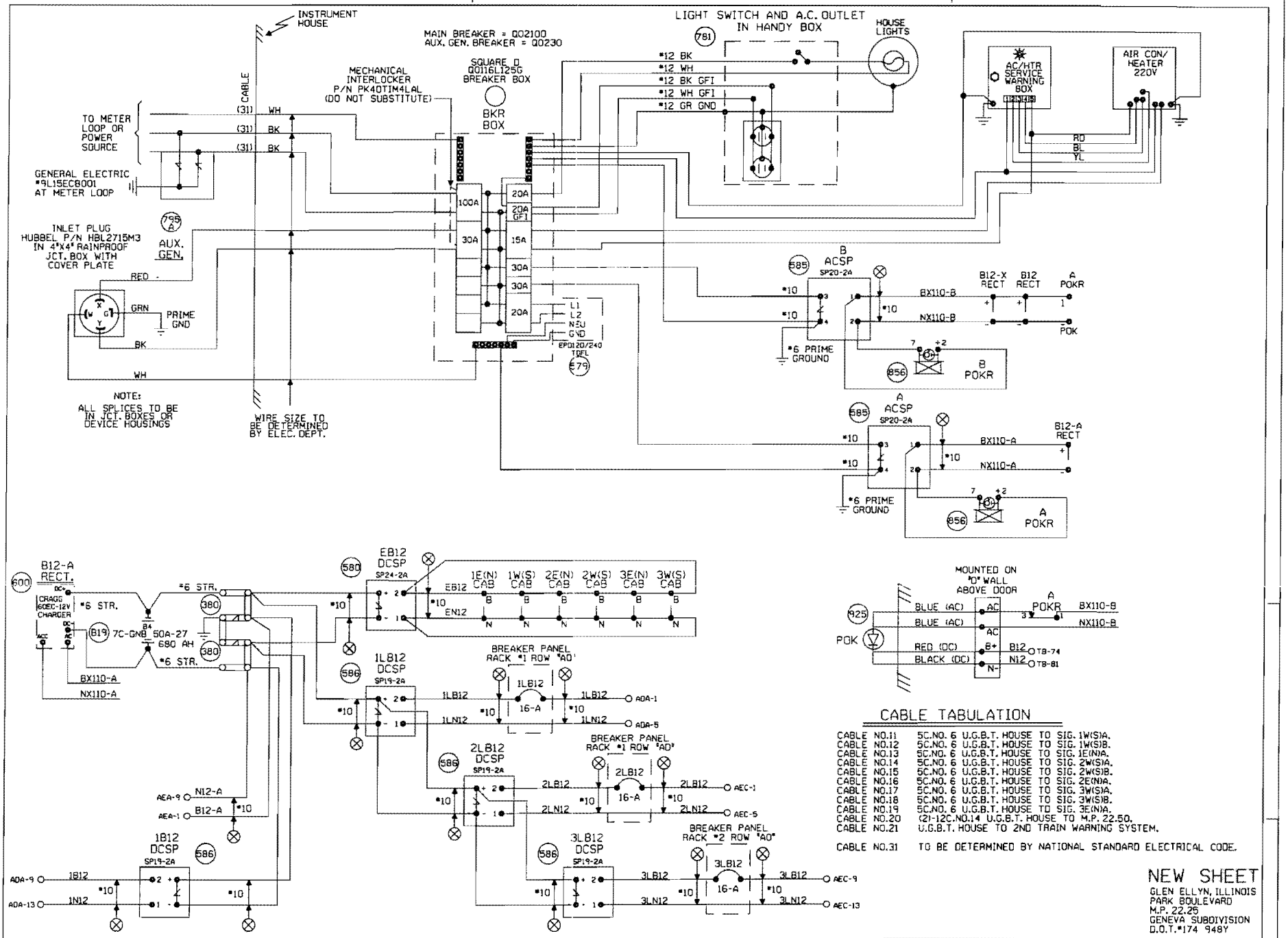

CABLE TABULATION

CABLE NO.11	5C.NO. 6 U.G.B.T. HOUSE TO SIG. 1W(S)A.
CABLE NO.12	5C.NO. 6 U.G.B.T. HOUSE TO SIG. 1W(S)B.
CABLE NO.13	5C.NO. 6 U.G.B.T. HOUSE TO SIG. 1E(N)A.
CABLE NO.14	5C.NO. 6 U.G.B.T. HOUSE TO SIG. 2W(S)A.
CABLE NO.15	5C.NO. 6 U.G.B.T. HOUSE TO SIG. 2W(S)B.
CABLE NO.16	5C.NO. 6 U.G.B.T. HOUSE TO SIG. 2E(N)A.
CABLE NO.17	5C.NO. 6 U.G.B.T. HOUSE TO SIG. 3W(S)A.
CABLE NO.18	5C.NO. 6 U.G.B.T. HOUSE TO SIG. 3W(S)B.
CABLE NO.19	5C.NO. 6 U.G.B.T. HOUSE TO SIG. 3E(N)A.
CABLE NO.20	(2)-12C.NO.14 U.G.B.T. HOUSE TO M.P. 22.50.
CABLE NO.21	U.G.B.T. HOUSE TO 2ND TRAIN WARNING SYSTEM.
CABLE NO.31	TO BE DETERMINED BY NATIONAL STANDARD ELECTRICAL CODE.

NEW SHEET
GLEN ELLYN, ILLINOIS
PARK BOULEVARD
M.P. 22.25
GENEVA SUBDIVISION
D.O.T.#174 948Y

1 06-16-08 INSTALL HALF BLOCK SYSTEM FROM COLLEGE AVE. TO LOMBARD, ILL. PHASE 2 PART 2. (MP. 23.76 TO MP. 20.41) AFE #89952 JJL /CTC/MDF	MODIFICATION LEVEL		UNION PACIFIC QUALITY PRODUCTIVITY SAFETY SIGNAL DESIGN	DES: CTC	UNION PACIFIC RAILROAD
	Q. A. LAST LEVEL CHECKED	00		DIG: CTC	CHICAGO, ILLINOIS TO CLINTON, IOWA C.T.C. CIRCUITS
	LAST LEVEL MOD THIS TYPICAL	00		CHK: JJL	
	LAST LEVEL BY DESIGNER	00		A.F.E. 89952	
	CHANGED FROM TYPICAL?	Y		ID: GEN2225.2X	Office of Sr. AVP Engineering - Signal/TCO Omaha, Nebraska
	02.01.08 4K SEARAC 2				

DATE 06-16-08
SHEET 2
DWG 22.25
GEN

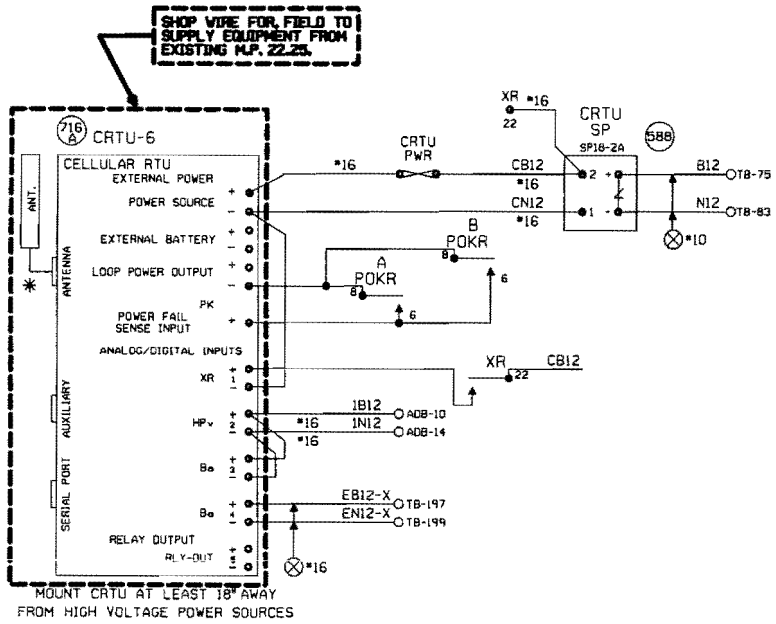

MOUNT CRTU AT LEAST 18" AWAY FROM HIGH VOLTAGE POWER SOURCES

NOTE: REUSE EXISTING CRTU FROM RETIRED PARK BOULEVARD XING BUNGALOW.

NOTES:
ALL DIODES 1N5060 OR 1N4004 UNLESS OTHERWISE NOTED.
✳ MOUNT ANTENNA ON TOP OF HOUSE.
ALL WIRES #18 UNLESS OTHERWISE NOTED.
ALL UNUSED 'NC' INPUTS MUST BE TIED HIGH TO BATTERY
ALL UNUSED ANALOG INPUTS MUST BE TIED HIGH TO BATTERY
ALL UNUSED 'NO' INPUTS MUST BE DISCONNECTED

CRTU FRONT PANEL DISPLAY CHART INDICATES NORMAL STATE

■ DIGITAL INPUT HIGH, OR POWER FAIL INPUT CLOSED

□ DIGITAL INPUT LOW, OR POWER FAIL INPUT OPEN

NORMAL STATE FOR ANALOG CHANNELS IS EQUAL TO THE STORED NOMINAL VOLTAGE +120% OR -81%

■ L ← LATCH IS SET BECAUSE CRTU DETECTED AN ALARM CONDITION

12.06V L

'sRUN MODE' 'sRUN MODE-SILENT'

CRTU RADIO IS DISABLED. REPROGRAM CRTU WITH LAPTOP.

UNIT INSTALLATION AND SETUP

R.R. SITE ID WHERE; SSSS = 4 CHARACTER SUBDIVISION ID. FILL WITH PRECEDING ZEROS AS REQUIRED. THE MAIN TRACK SUBDIVISION ID* IS IN THE CURRENT TIMETABLE. INDUSTRIAL LEADS, LEASED, AND LEAD TRACKS LISTED WITHIN THE SUBDIVISION MAY HAVE THEIR OWN UNIQUE SUBDIVISION ID*. ALWAYS REFER TO CURRENT PRINTED COPY OF THE TIMETABLE.
LLLLLLLL = B CHARACTERS USE OOT* AT CROSSINGS, AND
WOLLLLLL = USE 'WO' THEN MP* AT WAYSIDE LOCATIONS.
EXAMPLE = 0785W01801.5UT
HBLLLLLL = USE 'HB' THEN MP* AT HBO SITES.
EXAMPLE = 0100-HB55.62TX
THE MP* MUST USE A DECIMAL POINT TO SEPARATE NUMBERS. FILL WITH PRECEDING DASHES AS REQUIRED.
AA = 2 CHARACTER STATE NAME FOR ALL LOCATIONS. MUST BE 14 CHARACTERS LONG. NO SPACES ALLOWED.

SITE IDENTIFIER: SSSSLLLLLLLLAA	0001-174948YIL
OPERATION TO RESUME:	RUN
SIGNAL STRENGTH dBm	
CARRIER ID	
FIRMWARE VERSION	2.3.012
BOOT VERSION:	
CMM VERSION:	
SERIAL NUMBER	03-03149-2801
MIN ASSIGNMENT	
ESN: (MICROBURST ONLY)	
CONFIGURATION NET	MICROBURST
SILENCE INTERVAL	60 MINUTES
HEALTHCHECK INTERVAL	EVERY 2 DAYS
ALARM DEFER DELAY	240 MINUTES (4 HOURS)
SIGNAL STATUS	
SCADANET STATUS	
CALIBRATION CONSTANT CH1	
CALIBRATION CONSTANT CH2	000-09682
CALIBRATION CONSTANT CH3	000-09770
CALIBRATION CONSTANT CH4	
CALIBRATION CONSTANT PS	

FIELD PROVIDES: SAMPLED NOMINAL VOLTAGES, SCADANET STATUS CALIBRATION CONSTANTS, SERIAL NUMBER, AND SIGNAL STATUS.

CHANNEL SETUP - STANDARD CONFIGURATION 17:XR,HPv,Ba,Ba

CHANNEL NORMAL STATE	SENSE (NO/NC)	NAME FUNCTION	RECOGNITION DELAY SECONDS ACTIVE	RECOGNITION DELAY SECONDS NORMAL	RETURN TO NORMAL	REPORTING MODE	ALARM LINKED CHANNEL	ALARM LINKED CRITERIA	EVENT LOGGING ENABLED OPTIONS
POWER FAIL ■ (CH15)	POWER FAIL DETECT NO	PFin-PK AC POWER FAIL	7,200 ALARM	300 NORMAL	ENABLED	ALERT	DISABLED	N/A	ANALOG VALUE SENT
CH1 □ ■	DIGITAL INPUT NO	CH1-XR XR DOWN TO LONG	1,800 ALARM	1 NORMAL	ENABLED	ALERT	DISABLED	N/A	
CH2 STORED NOMINAL VOLTAGE	ANALOG INPUT N/A	CH2-HP/V GATES NOT UP/DOWN LIGHT OUT BATTERY LOW	600 ALARM	1200 NORMAL	ENABLED	ALERT W/UPDATE	DISABLED	N/A	
CH3 STORED NOMINAL VOLTAGE	ANALOG INPUT N/A	CH3-Ba/V BATTERY MONITOR BATTERY LOW	600 ALARM	1200 NORMAL	ENABLED	ALERT W/UPDATE	DISABLED	N/A	DIGITAL EVENTS
CH4 STORED NOMINAL VOLTAGE	ANALOG INPUT N/A	CH4-Ba/V BATTERY MONITOR BATTERY LOW	600 ALARM	1200 NORMAL	ENABLED	ALERT W/UPDATE	DISABLED	N/A	PFin-PK CH1-XR
POWER SOURCE (CH6)	ANALOG INPUT N/A	PS-Ba/V BATTERY MONITOR BATTERY LOW	600 ALARM	1200 NORMAL	ENABLED	ALERT W/UPDATE	DISABLED	N/A	

ANALOG CHANNEL	USEFUL RANGE VOLTS LOW	USEFUL RANGE VOLTS HIGH	DISPLAYED RANGE VOLTS LOW	DISPLAYED RANGE VOLTS HIGH	RELATIVE ALARM POINT LOW	RELATIVE ALARM POINT HIGH	ABSOLUTE ALARM POINT LOW	ABSOLUTE ALARM POINT HIGH	AUTOMATIC UPDATE INTERVAL	STORED NOMINAL VOLTAGE	SAMPLED NOMINAL VOLTAGE
CH2	0.0	30.00	0.0	30.00	81%	120%	10.0	29.0	14 DAYS	12.69	
CH3	0.0	30.00	0.0	30.00	81%	120%	10.0	29.0	14 DAYS	12.69	
CH4	0.0	30.00	0.0	30.00	81%	120%	10.0	29.0	14 DAYS	12.69	
POWER SOURCE	0.0	30.00	0.0	30.00	81%	120%	10.0	29.0	14 DAYS	12.69	
RELAY OUTPUT	NAME RLY-OUT		ACTIVE SET-UP-OPEN		NORMAL CLR-ON-CLOSE		PULSE DURATION		15 SECONDS	StdCfg Ver: 2.3.3 REV'D 9-20-02	

MAINTENANCE OPERATIONS

TO START OR ABORT ANY PROCEDURE

1. PRESS THE 'CANCEL' BUTTON FIRST

WHEN RESPONDING TO A CALL, PUT THE CRTU IN THE 'SILENCE ALARMS' MODE

1. PRESS 'SELECT' AND THEN '+ ARROW' BUTTON UNTIL
   DISPLAY: ACTION?
   SILENCE ALARMS
2. PRESS THE 'SELECT' BUTTON TWICE
3. CORRECT PROBLEM AND SIMULATE NORMAL TRAIN MOVEMENT THROUGH THE LOCATION
4. EXAMINE EACH CHANNEL ON THE CRTU
5. PRESS THE '+/- ARROW' BUTTON VERIFY ALL CHANNELS INDICATE A NORMAL STATE

NORMAL STATES ARE ON THE CHANNEL SETUP CHART

CLEAR TIMERS, LATCHES AND SEND ALL NORMAL

1. DO STEPS #1 - #5 ABOVE, AND PRESS 'CANCEL'.
2. PRESS 'SELECT' AND THEN '- ARROW' BUTTON UNTIL
   DISPLAY: ACTION?
   SERVICE MODE
3. PRESS 'SELECT' AGAIN TO RESET TIMERS, AND IF
   DISPLAY: SERVICE MODE
   ALL NORMAL
4. PRESS 'SELECT' AGAIN TO CLEAR LATCHES, AND SEND ALL NORMAL. SKIP STEPS #5-#6.
5. HOWEVER, IF ALARMS ARE NOT CLEARED:
   DISPLAY: SERVICE MODE
   ALARMS PENDING/PRESENT
6. PRESS 'CANCEL'. CORRECT PROBLEM AND REPEAT STEPS #2 THRU #5 UNTIL ALL NORMAL SENT.

TO CANCEL THE 'SILENCE ALARMS' MODE

1. PRESS 'SELECT' AND THEN '+ ARROW' BUTTON UNTIL
   DISPLAY: ACTION?
   CANCEL SILENCE
2. PRESS THE 'SELECT' BUTTON AGAIN

EXAMINE & SET BATTERY VOLTAGE NOMINAL VALUE

1. PRESS THE '+ ARROW' OR '- ARROW' BUTTON UNTIL THE DESIRED CHANNEL IS DISPLAYED.
   DISPLAY: PS-Ba:
   13.83V NORMAL
2. VERIFY THE DISPLAYED READING WITH A DIGITAL VOLTMETER
3. PRESS THE 'SELECT' BUTTON, AND THE CRTU DISPLAY WILL SWITCH BETWEEN CURRENT/SAVED NOMINAL VOLTAGE VALUES.
   DISPLAY: NOMINAL ON #67 (CURRENT)
   13.83
   DISPLAY: SAVED NOMINAL 6 (STORED)
   12.69
4. PRESS THE 'SELECT' BUTTON AND THE CURRENT OR 'NOMINAL ON' VALUE WILL BE SAMPLED AND STORED AS THE 'SAVED NOMINAL' VALUE
5. VERIFY THE 'NOMINAL ON' AND 'SAVED NOMINAL' VALUES ARE EQUIVALENT, REPEAT STEPS #1 THRU #3 & PRESS THE 'CANCEL' BUTTON.

NEW SHEET
GLEN ELLYN, ILLINOIS
PARK BOULEVARD
M.P. 22.25
GENEVA SUBDIVISION
O.O.T.#174 948Y

1) 06-16-08 INSTALL HALF BLOCK SYSTEM FROM COLLEGE AVE. TO LOMBARD, ILL. PHASE 2 PART 2. (MP: 23.76 TO MP. 20.41) AFE #89952 JJL /CTC/MOF

UNION PACIFIC — QUALITY PRODUCTIVITY SAFETY — SIGNAL DESIGN

DES:	CTC
DIG:	CTC
CHK:	JJL
A.F.E.	89952
ID:	GEN2225.24X

UNION PACIFIC RAILROAD
CHICAGO, ILLINOIS TO CLINTON, IOWA
C.T.C. CIRCUITS
Office of Sr VP Engineering - Signal/TCO Omaha, Nebraska

DATE	06-16-18
SHEET	2A
DWG	22.25
	GEN

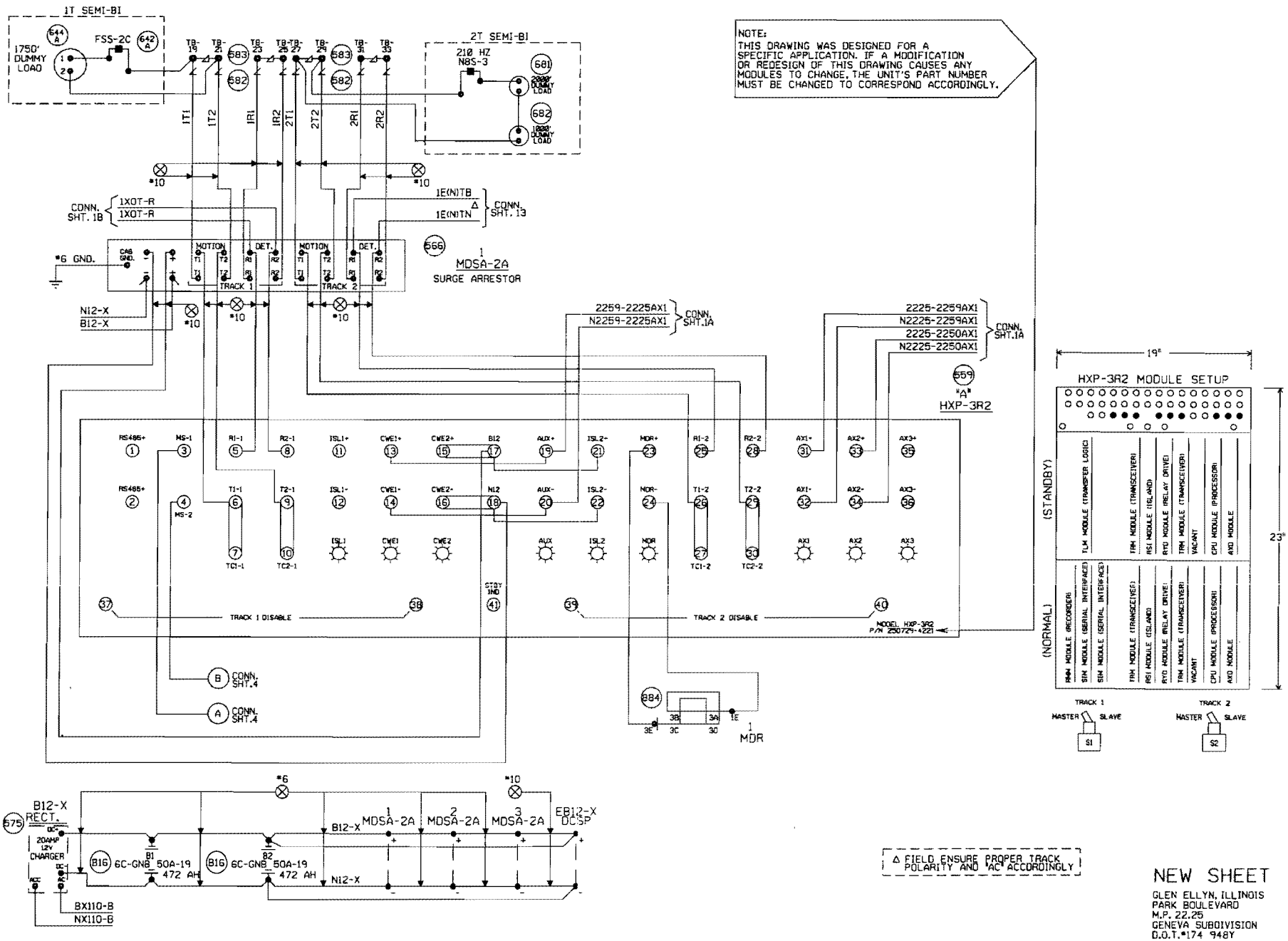

Δ FIELD ENSURE PROPER TRACK POLARITY AND "AC" ACCORDINGLY

NEW SHEET

GLEN ELLYN, ILLINOIS
PARK BOULEVARD
M.P. 22.25
GENEVA SUBDIVISION
D.O.T.#174 948Y

1 06-16-08 INSTALL HALF BLOCK SYSTEM FROM COLLEGE AVE. TO LOMBARD, ILL. PHASE 2 PART 2. (MP. 23.76 TO MP. 20.41) AFE #89952 JJL /CTC/MDF	MODIFICATION LEVEL		UNION PACIFIC SIGNAL DESIGN	DES: CTC	UNION PACIFIC RAILROAD	DATE 06-16-08
	Q.A. LAST LEVEL CHK'D.	DD		DIG: CTC	CHICAGO, ILLINOIS TO CLINTON, IOWA	SHEET 3
	LAST LEVEL MOD. THIS TYP.	DB		CHK: JJL	C.T.C. CIRCUITS	DWG 22.25
	LAST LEVEL BY DESIGNER.	CG		A.F.E. 89952	Office of Sr. AVP Engineering - Signal/TCO Omaha, Nebraska	GEN
	CHANGED FROM TYP.? Y/N	Y		ID= GEN2225.3X		

(REV. 01.02.21) (HX32TKUG.4)

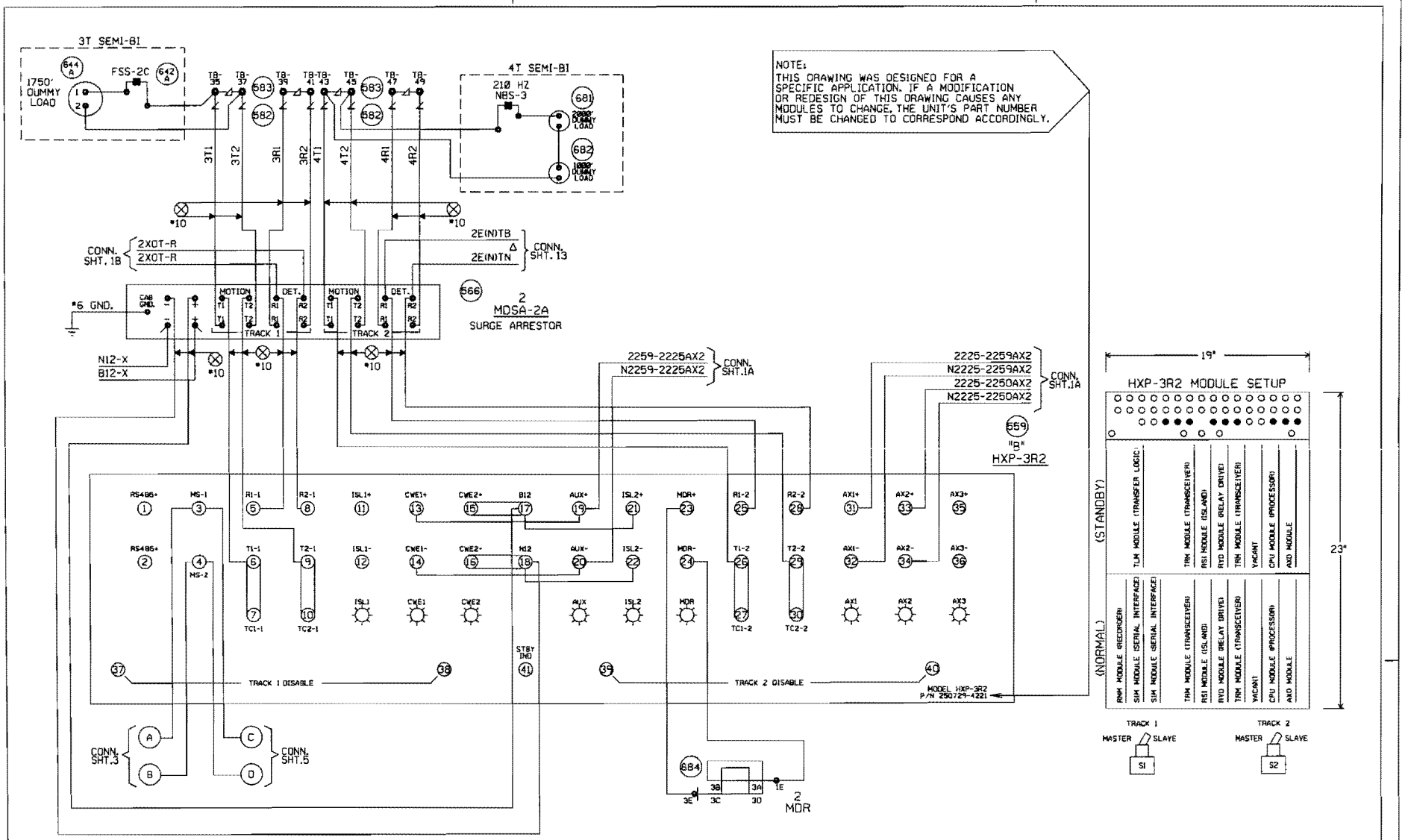

NOTE:
THIS DRAWING WAS DESIGNED FOR A SPECIFIC APPLICATION. IF A MODIFICATION OR REDESIGN OF THIS DRAWING CAUSES ANY MODULES TO CHANGE, THE UNIT'S PART NUMBER MUST BE CHANGED TO CORRESPOND ACCORDINGLY.

Δ FIELD ENSURE PROPER TRACK POLARITY AND "AC" ACCORDINGLY

NEW SHEET

GLEN ELLYN, ILLINOIS
PARK BOULEVARD
M.P. 22.25
GENEVA SUBDIVISION
D.O.T.#174 948Y

1	06-16-08 INSTALL HALF BLOCK SYSTEM FROM COLLEGE AVE. TO LOMBARD, ILL. PHASE 2 PART 2. (MP. 23.76 TO MP. 20.41) AFE #89952 JJL /CTC/MDF	MODIFICATION LEVEL		UNION PACIFIC SIGNAL DESIGN	DES: CTC	UNION PACIFIC RAILROAD	DATE 06-16-08	
		Q.A. LAST LEVEL CHK'D.	DD		DIG: CTC	CHICAGO, ILLINOIS TO CLINTON, IOWA C.T.C. CIRCUITS	SHEET 4	
		LAST LEVEL MOD. THIS TYP.	DB		CHK: JJL		DWG 22.25	
		LAST LEVEL BY DESIGNER.	DQ		A.F.E. 89952		GEN	
		CHANGED FROM TYP.? Y/N	Y		ID= GEN2225.4X	Office of Sr AVP Engineering - Signal/TCO Omaha, Nebraska		

(REV. 01.02.21) (HX32TKUG.5)

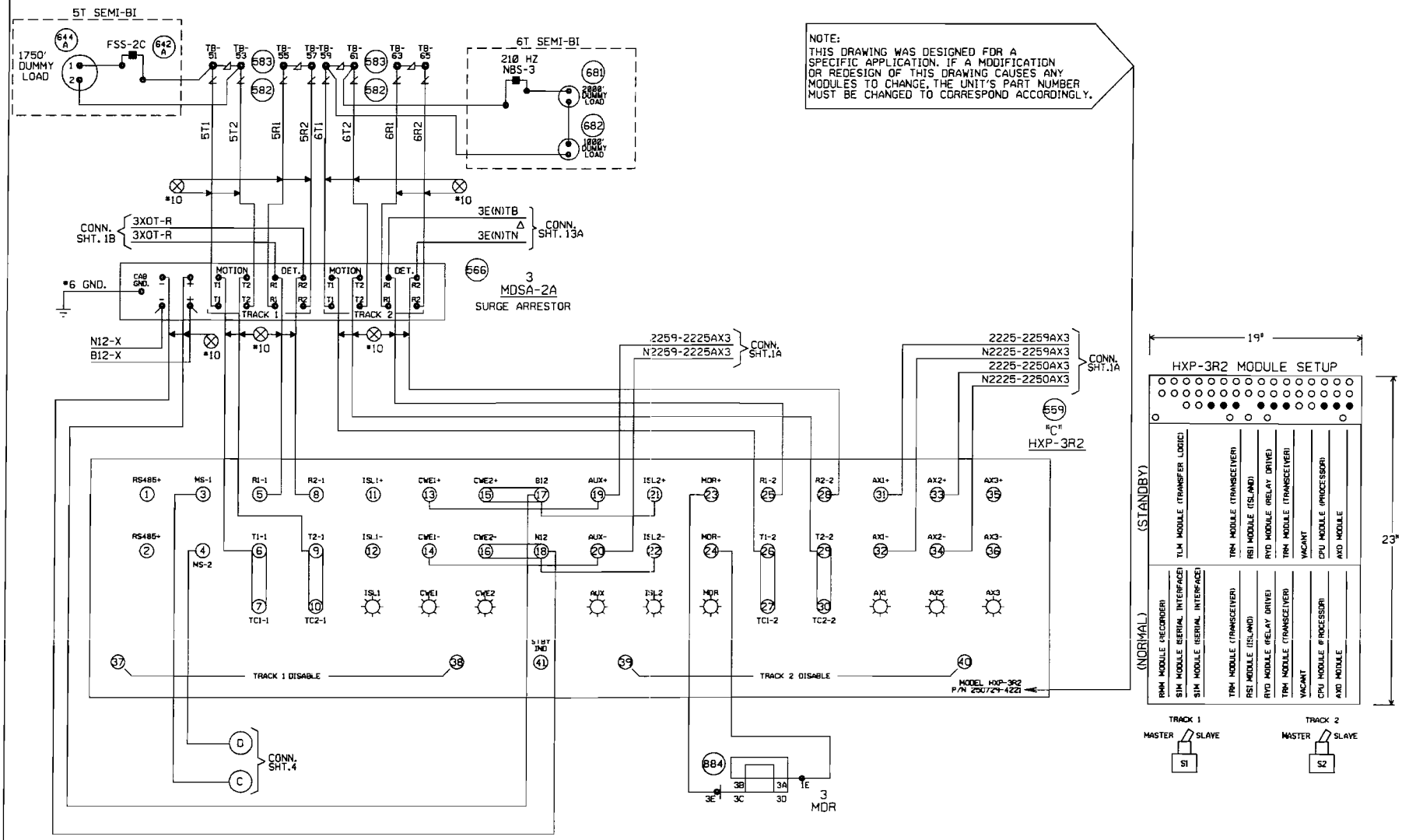

Δ FIELD ENSURE PROPER TRACK POLARITY AND "AC" ACCORDINGLY

NEW SHEET

GLEN ELLYN, ILLINOIS
PARK BOULEVARD
M.P. 22.25
GENEVA SUBDIVISION
D.O.T.#174 948Y

1 06-16-08 INSTALL HALF BLOCK SYSTEM FROM COLLEGE AVE. TO LOMBARD, ILL. PHASE 2 PART 2. (MP. 23.76 TO MP. 20.41) AFE #89952 JJL /CTC/MDF	MODIFICATION LEVEL		UNION PACIFIC QUALITY PRODUCTIVITY SAFETY SIGNAL DESIGN	DES: CTC	UNION PACIFIC RAILROAD	DATE 06-16-08
	Q.A. LAST LEVEL CHK'D.	DD		DIG: CTC	CHICAGO, ILLINOIS TO CLINTON, IOWA	SHEET 5
	LAST LEVEL MOD. THIS TYP.	DB		CHK: JJL	C.T.C. CIRCUITS	DWG 22.25
	LAST LEVEL BY DESIGNER.	DQ		A.F.E. 89952	Office of Sr AVP Engineering - Signal/TCO Omaha, Nebraska	GEN
	CHANGED FROM TYP.? Y/N	Y		ID= GEN2225.5X		

(REV. 01.02.21) (HX31TKBG.DGN)

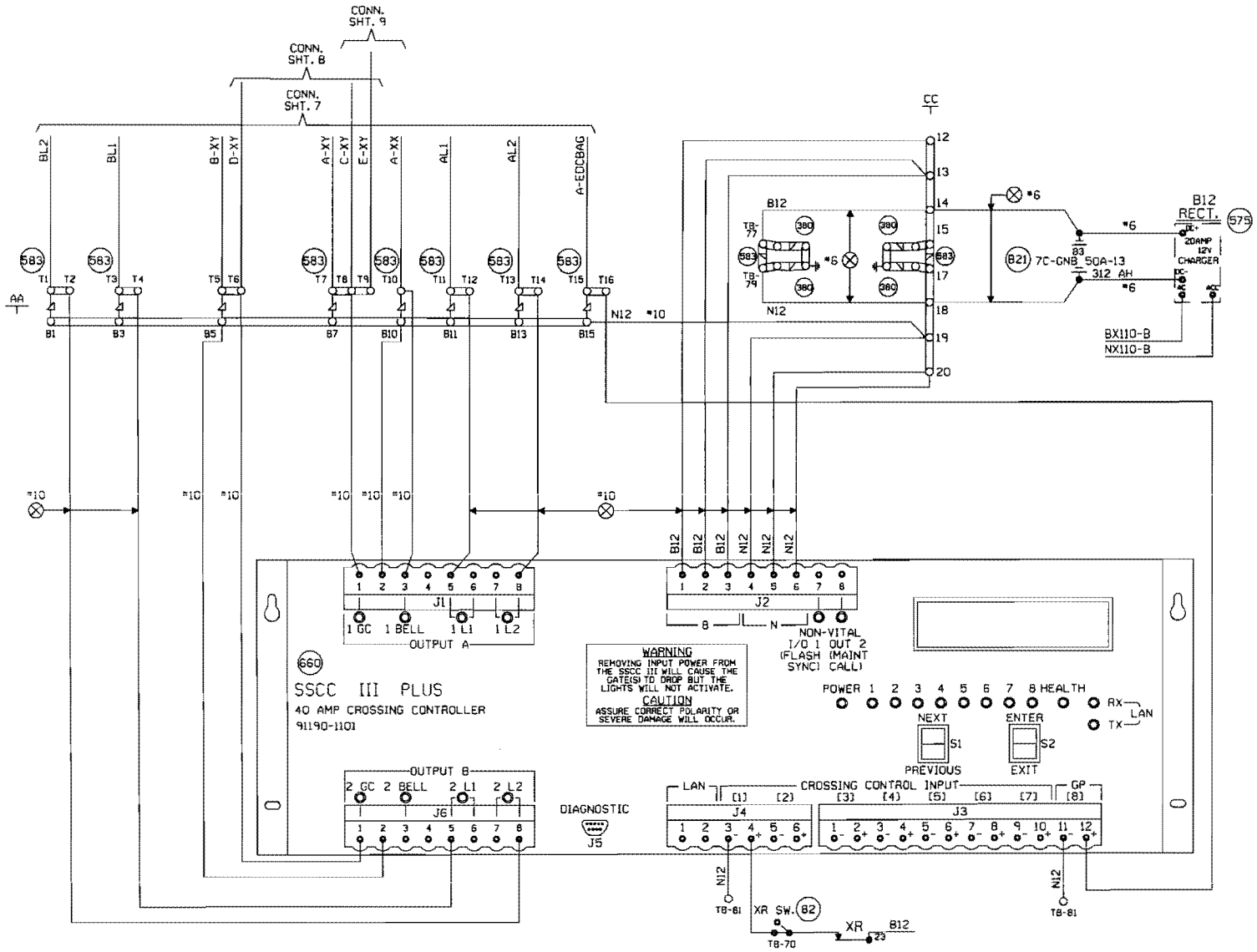

IMPORTANT

THE PROGRAM MCF AND ID LISTED BELOW MUST BE ENTERED IN THE PROGRAM SETUP ROUTINE FOR THIS SOLID STATE CROSSING CONTROLLER TO FUNCTION PROPERLY.

PROGRAM MCF: BASICPLS
PROGRAM ID: 087

EXTERNAL CROSSING CONTROLLER PROGRAM NOTE:

*1) PROGRAM INPUT 2-7 TO DISABLED

NEW SHEET

GLEN ELLYN, ILLINOIS
PARK BOULEVARD
M.P. 22.25
GENEVA SUBDIVISION
D.O.T.#174 948Y

1 06-16-08 INSTALL HALF BLOCK SYSTEM FROM COLLEGE AVE. TO LOMBARD, ILL. PHASE 2 PART 2. (MP. 23.76 TO MP. 20.41) AFE #89952 J.J. /CTC/MDF	MODIFICATION LEVEL		UNION PACIFIC QUALITY PRODUCTIVITY SAFETY SIGNAL DESIGN	DES: CTC	UNION PACIFIC RAILROAD	DATE 06-16-08
	D.A. LAST LEVEL CHECKED	DO		DIG: CTC	CHICAGO, ILLINOIS TO CLINTON, IOWA C.T.C. CIRCUITS	SHEET 6
	LAST LEVEL MOD THIS TYPICAL	DO		CHK: JJL		DWG 22.25
	LAST LEVEL BY DESIGNER	DO		A.F.E. 89952		GEN
	CHANGED FROM TYPICAL?	Y		ID= GEN2225.6X	Office of Sr. AVP Engineering - Signal/TCO Omaha, Nebraska	

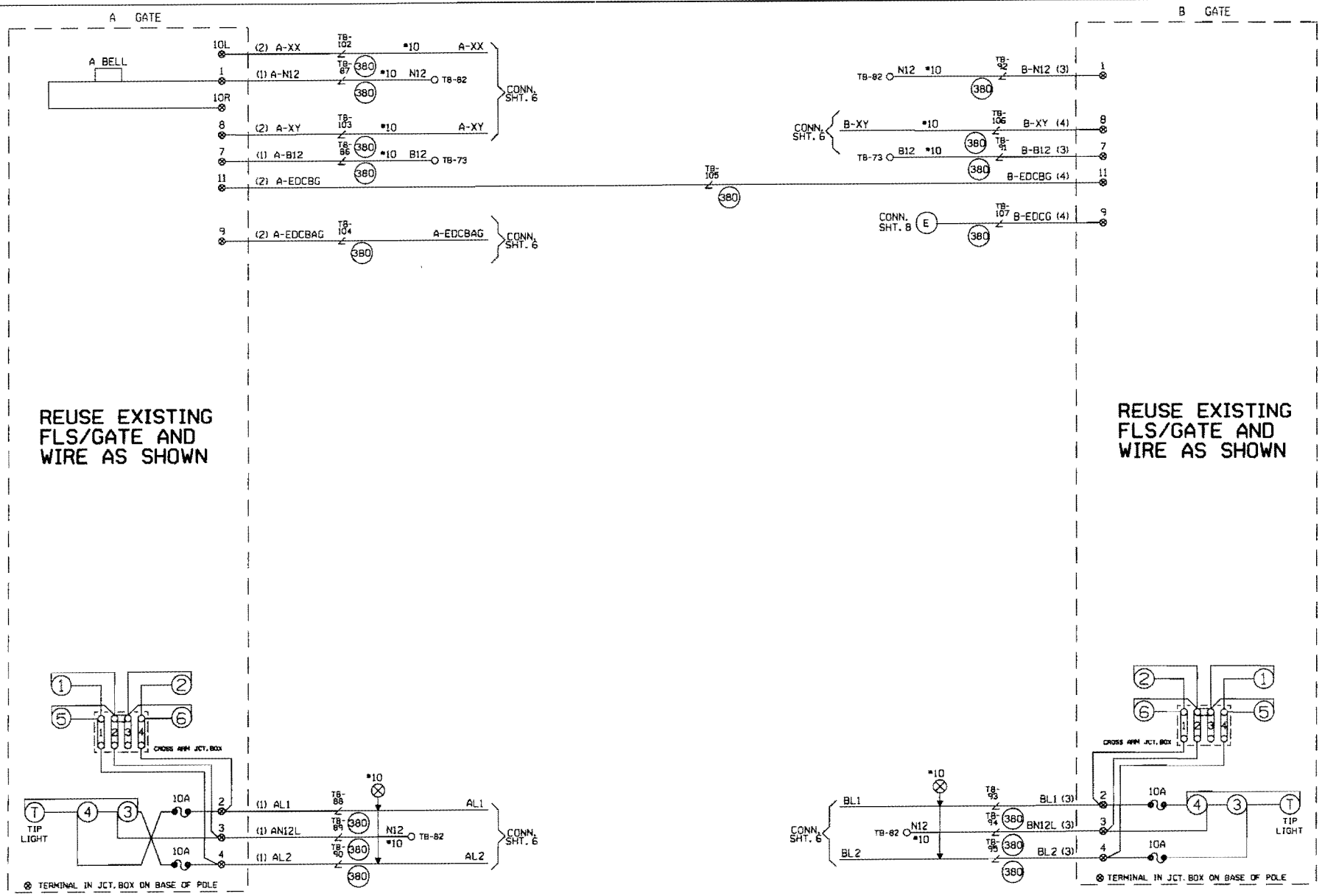

CABLE TABULATION

CABLE NO. 1 5C. NO.6 U.G.B.T.
CABLE NO. 2 7C. NO.14 U.G.B.T.
CABLE NO. 3 5C. NO.6 U.G.B.T.
CABLE NO. 4 7C. NO.14 U.G.B.T.

NEW SHEET

GLEN ELLYN, ILLINOIS
PARK BOULEVARD
M.P. 22.25
GENEVA SUBDIVISION
O.O.T.#174 948Y

1 06-16-08 INSTALL HALF BLOCK SYSTEM FROM COLLEGE AVE. TO LOMBARD, ILL. PHASE 2 PART 2. MP. 23.76 TO MP. 20.411 AFE #89952 JJL / /CTC/MDF	MODIFICATION LEVEL		UNION PACIFIC QUALITY PRODUCTIVITY SAFETY SIGNAL DESIGN	DES: CTC	UNION PACIFIC RAILROAD	DATE 06-16-08
	Q. A. LAST LEVEL CHECKED	DQ		DIG: CTC	CHICAGO, ILLINOIS TO	SHEET 7
	LAST LEVEL MOD THIS TYPICAL	DQ		CHK: JJL	CLINTON, IOWA	DWG 22.25
	LAST LEVEL BY DESIGNER	DQ		A.F.E. 89952	C.T.C. CIRCUITS	GEN
	CHANGED FROM TYPICAL?	Y		ID= GEN2225.7X	Office of Sr. AVP Engineering - Signal/TCO Omaha, Nebraska	
	MP 82.81.88 4K 4GFTYP.6					

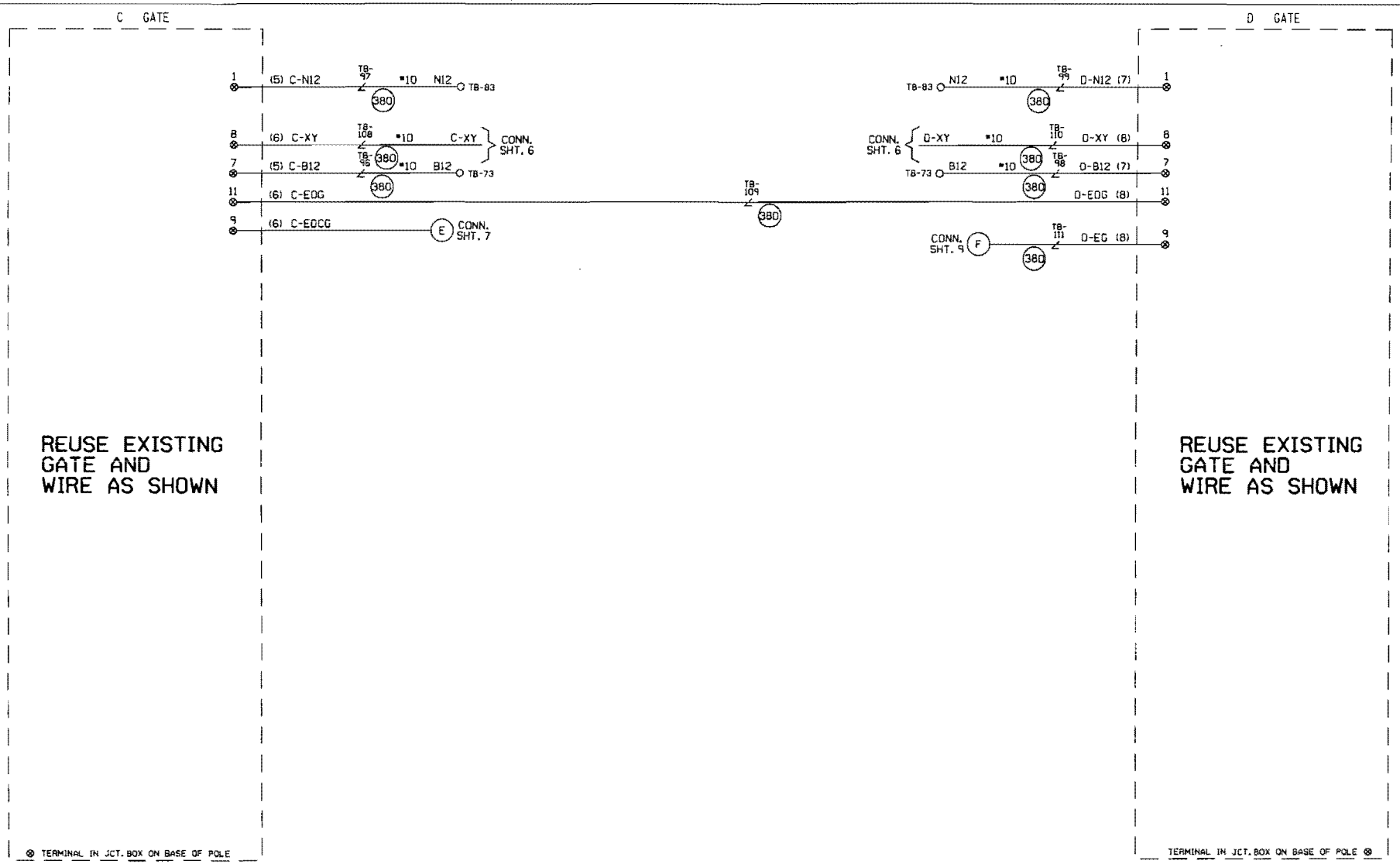

CABLE TABULATION

CABLE NO. 5 5C. NO.6 U.G.B.T.
CABLE NO. 6 7C. NO.14 U.G.B.T.
CABLE NO. 7 5C. NO.6 U.G.B.T.
CABLE NO. 8 7C. NO.14 U.G.B.T.

NEW SHEET

GLEN ELLYN, ILLINOIS
PARK BOULEVARD
M.P. 22.25
GENEVA SUBDIVISION
D.O.T.#174 948Y

1	06-16-08 INSTALL HALF BLOCK SYSTEM FROM COLLEGE AVE. TO LOMBARD, ILL. PHASE 2 PART 2. BMP. 23.76 TO MP. 20.411 AFE #89952 JJL /CTC/MOF	MODIFICATION LEVEL		UNION PACIFIC SAFETY QUALITY PRODUCTIVITY SIGNAL DESIGN	DES: CTC
		O. A. LAST LEVEL CHECKED	DO		DIG: CTC
		LAST LEVEL MOD THIS TYPICAL	DO		CHK: JJL
		LAST LEVEL BY DESIGNER	DO		A.F.E. 89952
		CHANGED FROM TYPICAL?	Y		ID= GEN2225.8X

UNION PACIFIC RAILROAD

CHICAGO, ILLINOIS TO
CLINTON, IOWA
C.T.C. CIRCUITS

Office of Sr AVP Engineering - Signal/TCO Omaha, Nebraska

DATE 06-16-08
SHEET 8
DWG 22.25
GEN

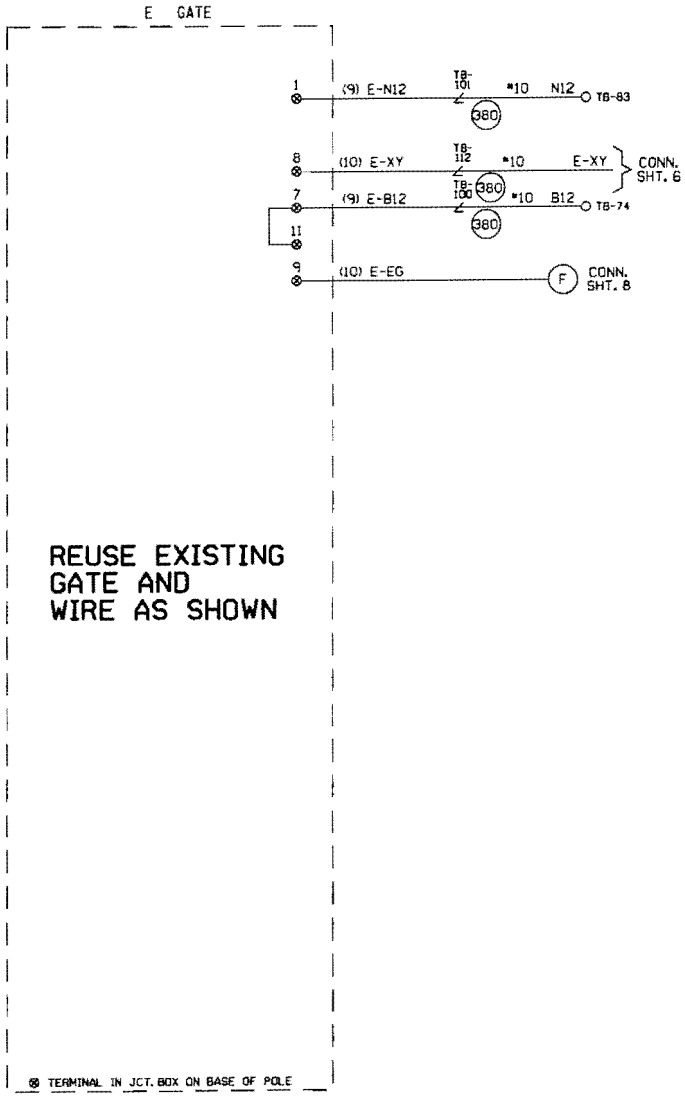

CABLE TABULATION

CABLE NO. 9 5C. NO.6 U.G.B.T.
CABLE NO.10 7C. NO.14 U.G.B.T.

NEW SHEET

GLEN ELLYN, ILLINOIS
PARK BOULEVARD
M.P. 22.25
GENEVA SUBDIVISION
O.O.T.#174 94BY

1	06-16-08 INSTALL HALF BLOCK SYSTEM FROM COLLEGE AVE. TO LOMBARD B.L. PHASE 2 PART 2. MP. 23.76 TO MP. 20.411 AFE #89952 J.J. / /CTC/MOF	MODIFICATION LEVEL		UNION PACIFIC SAFETY QUALITY PRODUCTIVITY SIGNAL DESIGN	DES: CTC
		O.H. LAST LEVEL CHECKED	DO		DIG: CTC
		LAST LEVEL MOD THIS TYPICAL	OO		CHK: JJL
		LAST LEVEL BY DESIGNER	DO		A.F.E. 89952
		CHANGED FROM TYPICAL?	Y		ID: GEN2225.9X
		Rev 02.01.00 4K 40FTYP.6			

UNION PACIFIC RAILROAD

CHICAGO, ILLINOIS TO
CLINTON, IOWA
C.T.C. CIRCUITS

Office of Sr. AVP Engineering - Signal/TCO Omaha, Nebraska

DATE 06-16-08
SHEET 9
DWG 22.25
GEN

SAFETRAN PRODUCTS MODEL "S-20" MECHANISM

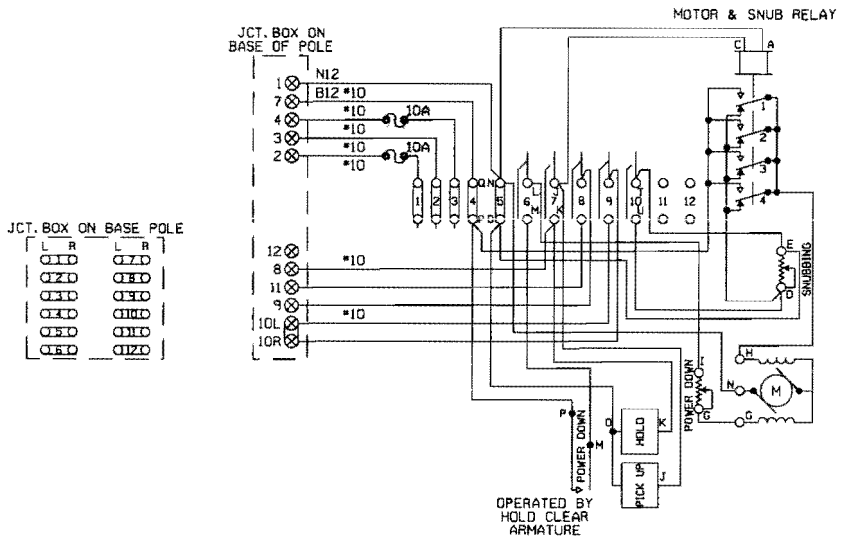

CONT. SPACE NO.	CLEARING (UP)		RETURNING (DN.)		FUNCTION OF CONTACT
	CLOSES	OPENS	CLOSES	OPENS	
6	45°	—	—	45°	POWER DOWN
7	—	89°	89°	—	POWER UP
8	83°	—	—	83°	FLASHING LIGHT (SPARE)
9	5°	—	—	5°	BELL (SPARE)
10	—	5°	5°	—	HORIZONTAL SNUB

MECHANISM SHOWN IN CLEAR POSITION.

INSTALLED

FIELD PLEASE VERIFY GATE MECH. WIRING AND AC PLAN ACCORDINGLY.

FOR WIRING GATES "A" & "C"

——— = IN

CTC/CJB
06-16-08

REDRAWN
GLEN ELLYN, ILLINOIS
PARK BOULEVARD
M.P. 22.25
GENEVA SUBDIVISION
D.O.T.#174 948Y

1 06-16-08 INSTALL HALF BLOCK SYSTEM FROM COLLEGE AVE. TO LOMBARD, ILL. PHASE 2 PART 2. (MP. 23.76 TO MP. 20.41) AFE #89952 JJL /CTC/MDF	UNION PACIFIC QUALITY PRODUCTIVITY SAFETY SIGNAL DESIGN	DES: CTC DIG: CTC CHK: JJL A.F.E. 89952 ID: GEN2225.10X	UNION PACIFIC RAILROAD CHICAGO, ILLINOIS TO CLINTON, IOWA C.T.C. CIRCUITS Office of Sr AVP Engineering - Signal/TCO Omaha, Nebraska	DATE 06-16-08 SHEET 10 DWG 22.25 GEN