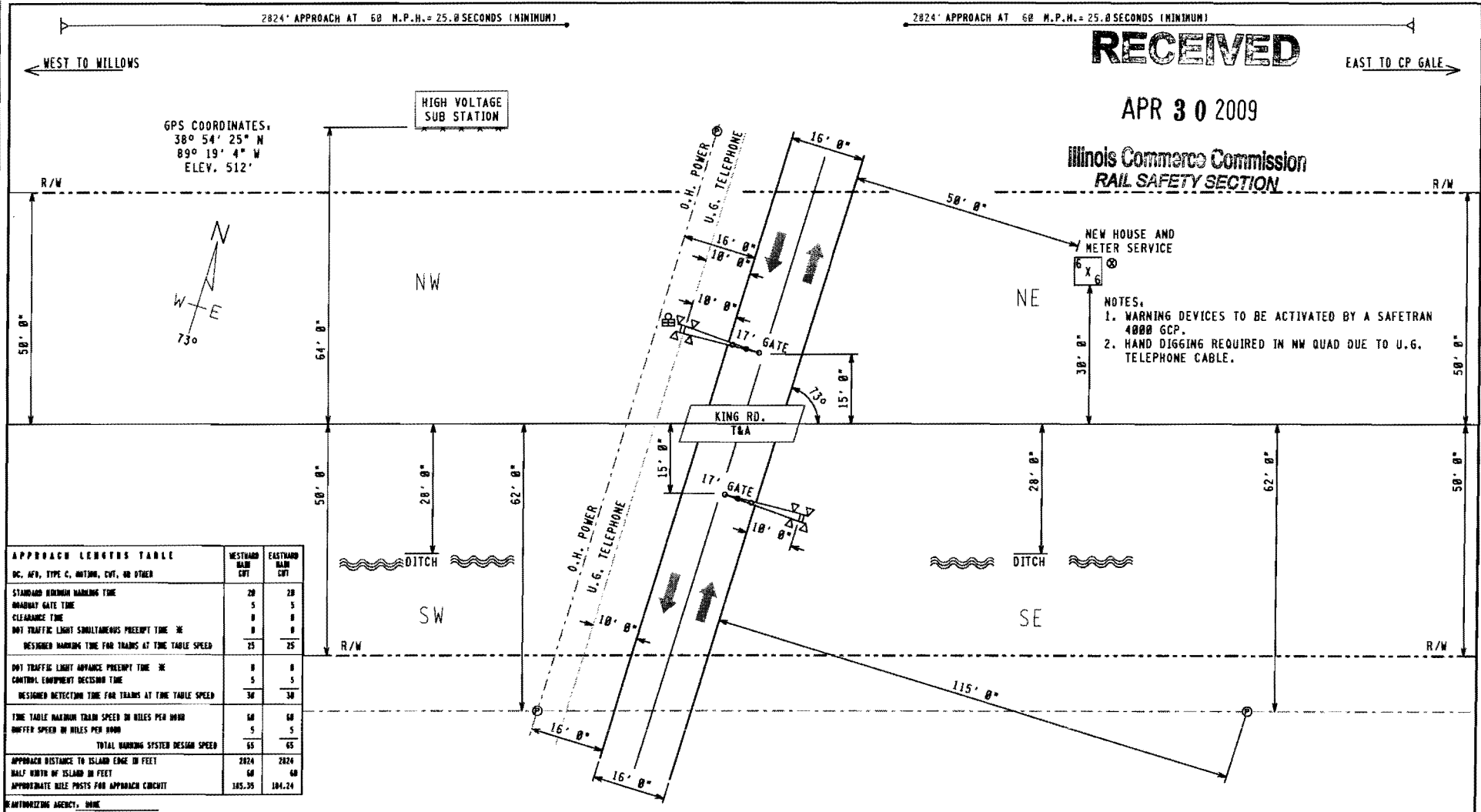

RECEIVED

APR 30 2009

Illinois Commerce Commission
RAIL SAFETY SECTION

APPROACH LENGTHS TABLE DC, AFD, TYPE C, MOTION, CWT, OR OTHER	WESTWARD MAIN CWT	EASTWARD MAIN CWT
STANDARD MINIMUM WARNING TIME	20	20
ROADWAY GATE TIME	5	5
CLEARANCE TIME	0	0
DOT TRAFFIC LIGHT SIMULTANEOUS PREEMPT TIME *	0	0
DESIGNED WARNING TIME FOR TRAINS AT TIME TABLE SPEED	25	25
DOT TRAFFIC LIGHT ADVANCE PREEMPT TIME *	0	0
CONTROL EQUIPMENT DECISION TIME	5	5
DESIGNED DETECTION TIME FOR TRAINS AT TIME TABLE SPEED	30	30
TIME TABLE MAXIMUM TRAIN SPEED IN MILES PER HOUR	60	60
BUFFER SPEED IN MILES PER HOUR	5	5
TOTAL WARNING SYSTEM DESIGN SPEED	65	65
APPROACH DISTANCE TO ISLAND EDGE IN FEET	2824	2824
HALF WIDTH OF ISLAND IN FEET	60	60
APPROXIMATE MILE POSTS FOR APPROACH CIRCUIT	185.35	184.24

*AUTHORIZING AGENCY: NONE
*DATE OF REQUIREMENT: NONE
*AMOUNT OF TIME (SEC.): NONE

FILE NAME: QS18480.H01	REVISION DATES	PRODUCED FOR:	PRODUCED BY:	LEGEND	GUARD RAIL	METER SERVICE ⊗	STREET NAME: KING RD.
DATE DRAWN: 06-09-2008	- -	CSX TRANSPORTATION	SAFETRAN systems	CSX ROW	O.H. POWER	POLE Ⓟ	CITY & STATE: SMITHBORO, IL
DRAWN BY: GARY CARLEE	- -	RAIL TRANSPORT GROUP ENGINEERING	7775 BAYMEADOWS WAY	R/R POLELINE	FENCE	FIRE PLUG Ⓕ	PROJECT #: IL2008016
CHECKED BY: ERNESTO PROSPERO	- -	COMMUNICATIONS AND SIGNALS	SUITE 250	GAS	WATER	SEWER CAP Ⓢ	OP #: IL0252
SSC #: JXXD00646	- -		JACKSONVILLE, FL 32256	FIBER OPTIC	SEWER	GAS VENT Ⓥ	DOT: 546513J

PROPOSED CROSSING LAYOUT
SCALE = 20:1

INDEX

CONTENTS

SH. NO.		REVISION NO. 1	2	3	4	5	6	7	8	9
I01	INDEX AND REVISIONS	⧄								
S01	TRACK AND SIGNAL PLAN	⧄								
P01	MINIMUM PROGRAM STEPS REPORT CWE-00	⧄								
E01	POWER DISTRIBUTION	⧄								
C01	DETECTION DEVICE CONSIST CWE-00	⧄								
C02	DETECTION CIRCUITRY CWE-00	⧄								
C03	DETECTION CIRCUITRY CWE-00	⧄								
C04	CROSSING WARNING DEVICE GATE CIRCUITRY	⧄								
C05	CROSSING WARNING DEVICE LIGHT CIRCUITRY	⧄								
C06	CROSSING WARNING DEVICE CIRCUITRY	⧄								
C07	SEAR II1 CONFIGURATION & FUNCTIONS	⧄								

⧄ = PLANS SENT TO FIELD (DISTRIBUTED)

⊠ = PLANS AS-IN-SERVICED (UP TO DATE)

REVISIONS

REV. NO.	PROJECT NO.	DESIGN DATE	IN SERVICE DATE	REVISION DATE
1	IL2000016	06-24-00		

TO BE COMPLETED ON A.I.S.

NEW WORK

SAFETRAN systems

PROJECT #: IL2000016

DES/CHKD BY: MLS/EJH

DATE: 06-24-00

⬭ = NOTE

4K.I01
REV. 02-29-00

CSX TRANSPORTATION

RAIL TRANSPORT GROUP ENGINEERING
COMMUNICATIONS AND SIGNALS

WILLOWS TO CP GALE

KING ROAD 546513J

INDEX AND REVISIONS

SMITHBORO, IL M.P. QS-184.80

DESIGNED	DIGITIZED	CHECKED	DATE
SAF/MLS	SAF/MLS	SAF/EJH	06-24-00

DESIGN DATE	REV. NO.	DRAWING	SHEET NO	FILE	SHEET
06-24-00	1	-----	-----	QS18480	I01

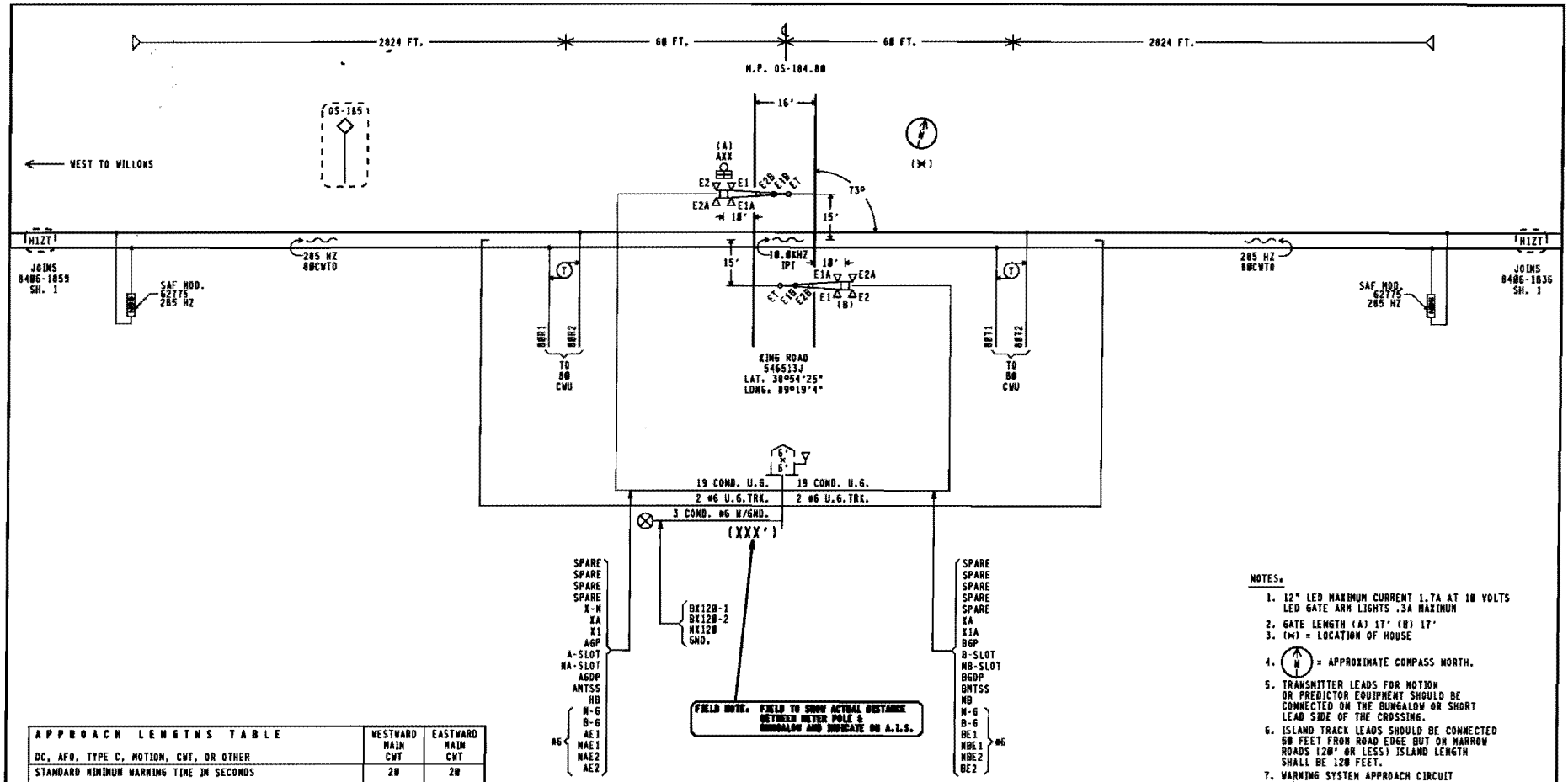

APPROACH LENGTHS TABLE DC, AFO, TYPE C, MOTION, CWT, OR OTHER	WESTWARD MAIN CWT	EASTWARD MAIN CWT
STANDARD MINIMUM WARNING TIME IN SECONDS	20	20
ROADWAY GATE TIME IN SECONDS	5	5
CLEARANCE TIME IN SECONDS	0	0
DOT TRAFFIC LIGHT SIMULTAMEOUS PREEMPT TIME IN SECONDS ✱	0	0
DESIGNED WARNING TIME FOR TRAINS AT TIME TABLE SPEED	25 SEC.	25 SEC.
DOT TRAFFIC LIGHT ADVANCE PREEMPT TIME IN SECONDS ✱	0	0
CONTROL EQUIPMENT DECISION TIME IN SECONDS	5	5
DESIGNED DETECTION TIME FOR TRAINS AT TIME TABLE SPEED	30 SEC.	30 SEC.
TIME TABLE MAXIMUM TRAIN SPEED IN MILES PER HOUR	60	60
BUFFER SPEED IN MILES PER HOUR	5	5
TOTAL WARNING SYSTEM DESIGN SPEED IN MILES PER HOUR	65	65
APPROACH DISTANCE TO ISLAND EDGE IN FEET	2824	2824
HALF WIDTH OF ISLAND IN FEET	60	60
APPROXIMATE MILE POSTS FOR APPROACH CIRCUIT	185.35	184.24

✱AUTHORIZING AGENCY. NONE

✱DATE OF REQUIREMENT. NONE

✱AMOUNT OF TIME (SEC.). NONE

NOTES.

1. 12" LED MAXIMUM CURRENT 1.7A AT 10 VOLTS LED GATE ARM LIGHTS .3A MAXIMUM
2. GATE LENGTH (A) 17' (B) 17'
3. (✱) = LOCATION OF HOUSE
4. (N) = APPROXIMATE COMPASS NORTH.
5. TRANSMITTER LEADS FOR MOTION OR PREDICTOR EQUIPMENT SHOULD BE CONNECTED ON THE BUNGALOW OR SHORT LEAD SIDE OF THE CROSSING.
6. ISLAND TRACK LEADS SHOULD BE CONNECTED 50 FEET FROM ROAD EDGE BUT ON NARROW ROADS (20' OR LESS) ISLAND LENGTH SHALL BE 120 FEET.
7. WARNING SYSTEM APPROACH CIRCUIT DISTANCES ARE TO BE MEASURED FROM THE ISLAND TRACK CONNECTIONS.

NEW WORK EXCEPT

= EXISTING

SAFETRAN systems

PROJECT #: IL2000816

DES/CHKD BY. NLS/EJH

DATE. 06-24-00

= NOTE

4K.S01
REV. 12-22-06

CSX TRANSPORTATION

RAIL TRANSPORT GROUP ENGINEERING
COMMUNICATIONS AND SIGNALS

WILLOWS TO CP GALE

KING ROAD 546513J

TRACK AND SIGNAL PLAN

SMITHBORO, IL M.P. OS-184.80

DESIGNED	DIGITIZED	CHECKED	DATE
SAF/NLS	SAF/NLS	SAF/EJH	06-24-00

DESIGN DATE	REV. NO.	DRAWING	SHEET NO	FILE	SHEET
06-24-00	1	-----	-----	051848	S01

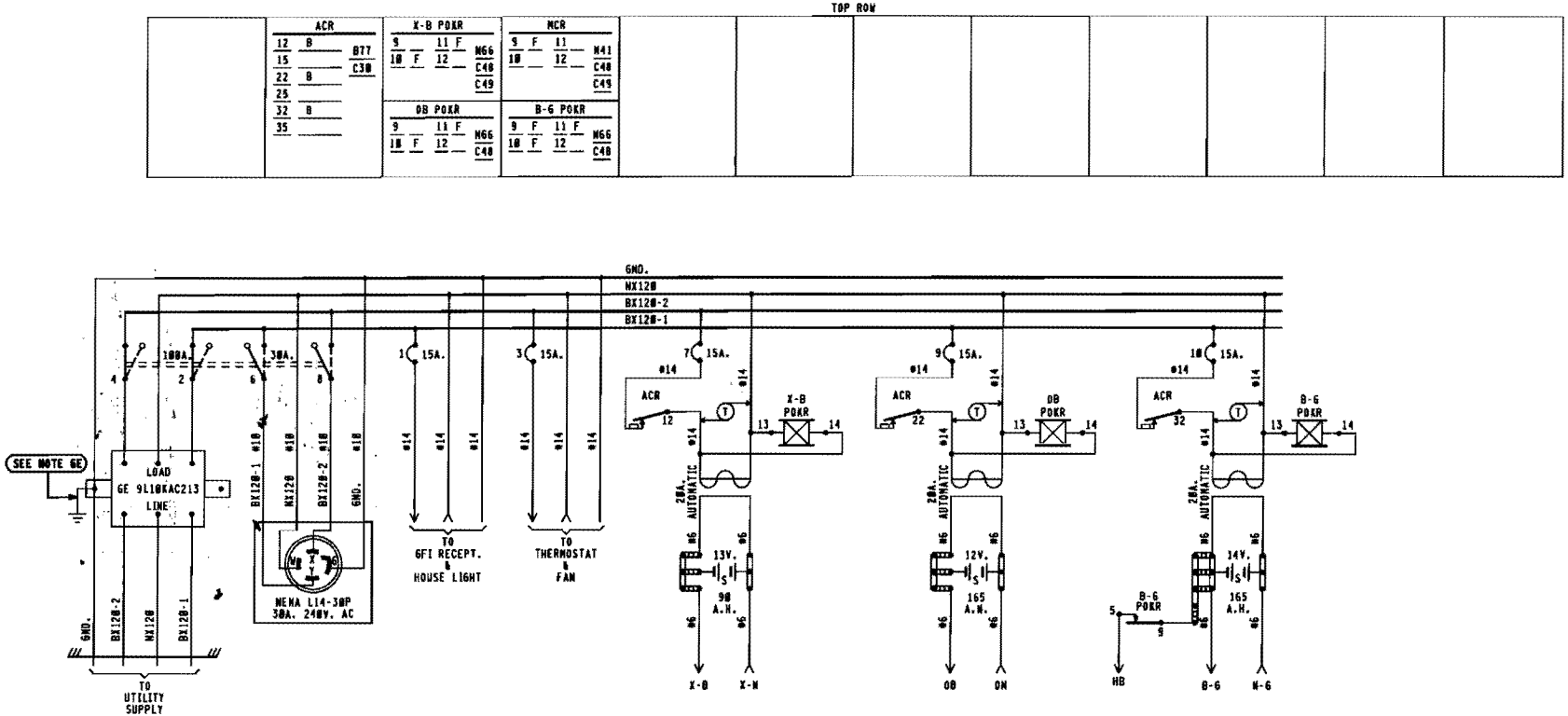

BX120-1	BX120-2
16.0 AMPS	8.0 AMPS

MAXIMUM LOAD
CALCULATED PER SS360'

NOTES:

1 - REFERENCES ARE PER SCMS-13.
2 - ARRESTERS ARE PER SS382.
3 - SHELF RELAY PLACEMENT ON CONSIST CHART HAS NO SIGNIFICANCE.
4 - PLUG-IN RELAYS ARE VIEWED FROM THE FRONT OF RACK.
5 - BATTERY A.H. CAPACITY SHOWN IS THE MINIMUM REQUIREMENT.
6 - WIRING
  A - FEED TO ALL BUSSES, LIGHT CIRCUITS, MOTOR CIRCUITS TO BE #10 FLEX.
  B - 120-VOLT FEED FROM ENTRANCE TO POWER BUSS TO BE #10 FLEX.
  C - ALL TRACK WIRES TO BE #10 FLEX.
  D - ALL OTHERS TO BE #16 FLEX UNLESS NOTED.
  E - GROUND WIRE NOT NECESSARY WHEN GE ARRESTER IS MOUNTED ON GROUND PLANE OR METAL ENCLOSURE AFFIXED DIRECTLY TO BUNGALOW METALLIC STRUCTURAL MEMBER.
7 - CIRCUIT INTERRUPTERS 2 & 4 ARE MECHANICALLY INTERLOCKED WITH CIRCUIT INTERRUPTERS 6 & 8.

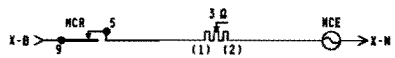

6'X 6' RELAY HOUSE W/FARADAY SHIELD

NEW WORK

SAFETRAN systems

PROJECT #: IL2008016
DES/CHKD BY: MLS/EJH
DATE: 06-24-08

= NOTE

CSX TRANSPORTATION
RAIL TRANSPORT GROUP ENGINEERING
COMMUNICATIONS AND SIGNALS

WILLOWS TO CP GALE
KING ROAD 546513J
POWER DISTRIBUTION
SMITHBORO, IL M.P. QS-184.80

4000GCP.E01
REV. 02-29-08

DESIGNED	DIGITIZED	CHECKED	DATE
SAF/MLS	SAF/MLS	SAF/EJH	06-24-08

DESIGN DATE	REV. NO.	DRAWING	SHEET NO	FILE	SHEET
06-24-08	1	-----	-----	QS18480	E01

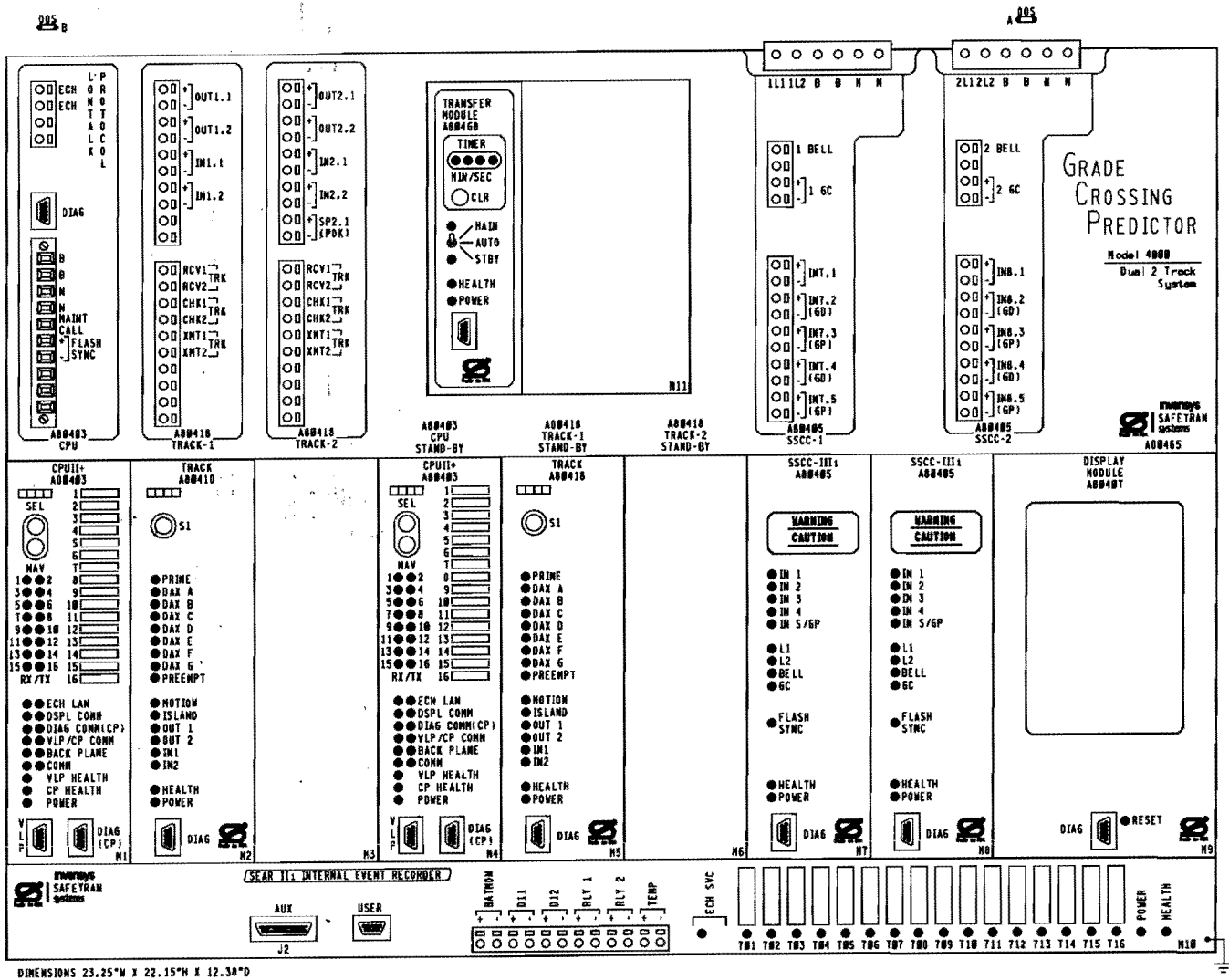

DIMENSIONS 23.25"W X 22.15"H X 12.38"D

GCP 4000 APPLICATION NOTES.

1. THE GRADE CROSSING PREDICTOR (GCP) IS A MODULAR MICROPROCESSOR CONTROLLED SYSTEM THAT IS DEPLOYED TO CONTINUALLY MONITOR THE APPROACHES TO RAILROAD GRADE CROSSINGS AND TO CONTROL THE LAMPS, GATES AND BELLS ASSOCIATED WITH THOSE CROSSINGS. WHEN EQUIPPED WITH THE SEAR II1 MODULE THE GCP 4000 WILL RECORD EVENTS AND REPORT ALARMS WHEN CONNECTED TO AN OFFICE SYSTEM.

2. THE GCP 4000 GCP (A00465) IS A TWO TRACK REDUNDANT UNIT CAPABLE OF DRIVING 4 INDEPENDENT FLASHER AND GATE SIGNALS AND RECORDING EVENTS AND REPORTING ALARMS. THE STANDARD A00465 INCLUDES THE FOLLOWING MODULES.

SLOT	MODULE	FUNCTION	PART NO.
M1	CPU-II+	MAIN	A00403
M2	TRACK-1	MAIN	A00418
M3	PANEL	NONE	D39325
M4	CPU-II+	STANDBY	A00403
M5	TRACK-1	STANDBY	A00418
M6	PANEL	NONE	D39325
M7	SSCC-III1	A SIGNAL	A00405
M8	SSCC-III1	B SIGNAL	A00405
M9	DISPLAY MODULE		A00407
TOP CENTER	TRANSFER UNIT		A00460
LOWER BAY	SEAR II1	RECORDER	A00410
OPTIONAL MODULES.			
RIO MODULE			A00413

3. EACH TRACK MODULE HAS TWO PROGRAMMABLE INPUTS AND TWO PROGRAMMABLE OUTPUTS.

4. THE SEAR II1 INTERNAL EVENT RECORDER HAS INPUTS FOR ONE BATTERY MONITOR, TWO NON-VITAL INPUTS AND TWO PROGRAMMABLE RELAY DRIVES (HEEL/FRONT).

5. LOCATED ON THE FRONT OF EACH MODULE THERE ARE LED LIGHTS TO INDICATE THE ACTIVITY OF CERTAIN FUNCTIONS OCCURRING INSIDE THE GCP.

6. BETWEEN SLOT 1 & 2 THERE IS A CHASSIS IDENTIFICATION CHIP (CIC) SOCKET AND AN ECD CONNECTOR (DB-25 FEMALE).

7. UPON THE FAILURE OF A MODULE IN SLOTS M1-M3 THE AUTOMATIC TRANSFER UNIT SWITCHES TO THE STANDBY MODULES IN SLOTS M4-M6.

NEW WORK

SAFETRAN systems

PROJECT #. TL2000816
DES/CHKD BY. MLS/EJH
DATE. 06-24-08

CSX TRANSPORTATION
RAIL TRANSPORT GROUP ENGINEERING
COMMUNICATIONS AND SIGNALS

WILLOWS TO CP GALE
KING ROAD S46513J
DETECTION DEVICE CONSIST CNE-88
SMITHBORO, IL N.P. QS-184.88

4K-CHASSIS.DGN
REV. 12-22-06

DESIGNED	DIGITIZED	CHECKED	DATE
SAF/MLS	SAF/MLS	SAF/EJH	06-24-08

DESIGN DATE	REV. NO.	DRAWING	SHEET NO	FILE	SHEET
06-24-08	1	-----	-----	QS184B	C01

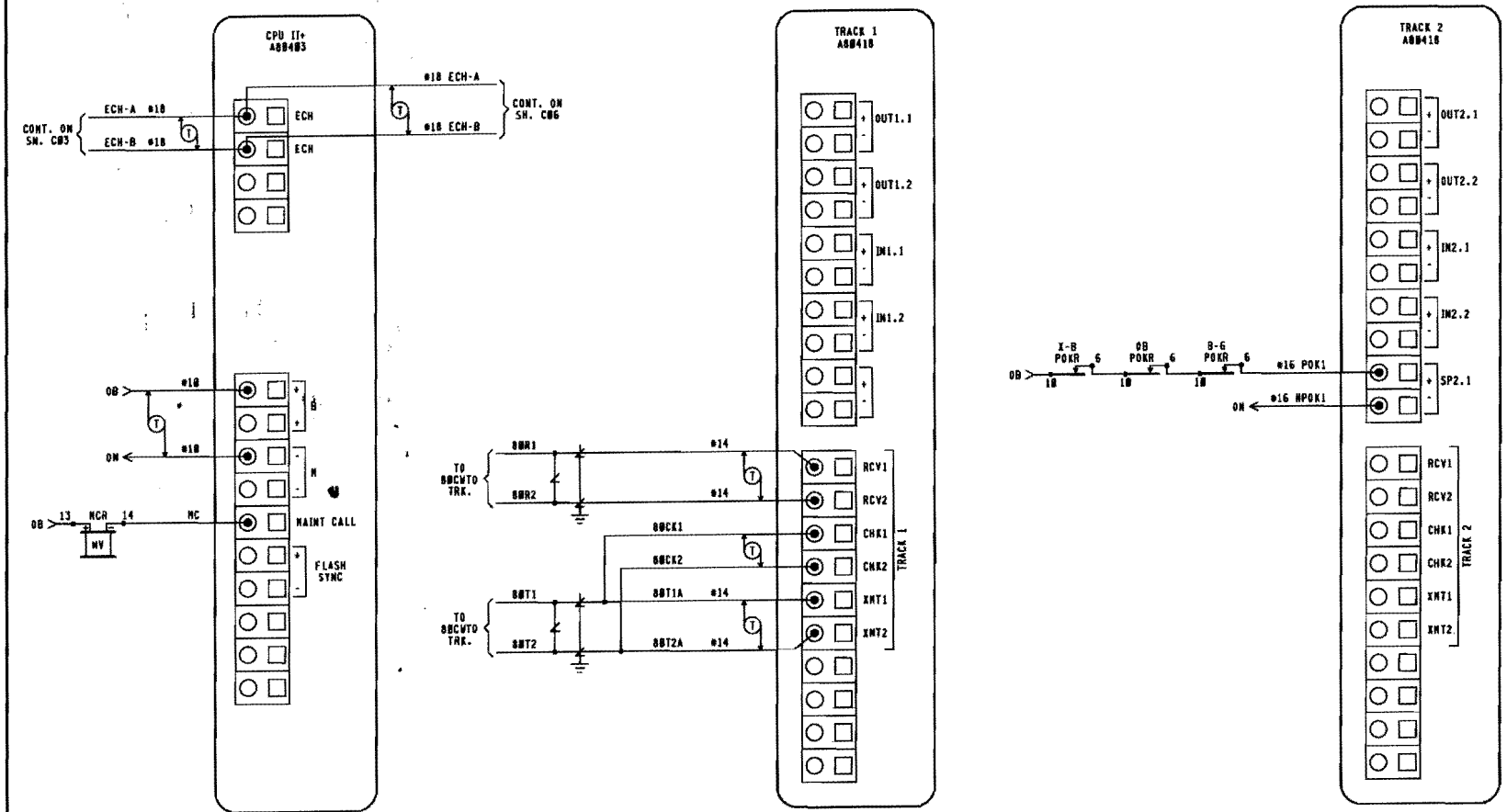

NOTE:

ECHELON CONNECTIONS NOT TO EXCEED 53' IN LENGTH AND TOTAL LENGTH COMBINED NOT TO EXCEED 430' WITH A MAXIMUM OF 8 NODES. RECOMMEND USE BELDEN WIRE CABLE #8461 OR EQUIVALENT.

NEW WORK

SAFETRAN systems

PROJECT #: IL2000016
DES/CNKD BY: MLS/EJH
DATE: 06-24-08

CSX TRANSPORTATION

RAIL TRANSPORT GROUP ENGINEERING
COMMUNICATIONS AND SIGNALS

WILLOWS TO CP GALE

KING ROAD 540613J

DETECTION CIRCUITRY CWE-88

SMITHBORO, IL M.P. OS-184.88

4K-TERMINALS.DGN
REV. 02-29-08

DESIGN DATE	REV. NO.	DRAWING	SHEET NO	FILE	SHEET
06-24-08	1	-----	-----	OS18488	C02

DESIGNED	DIGITIZED	CHECKED	DATE
SAF/MLS	SAF/MLS	SAF/EJH	06-24-08

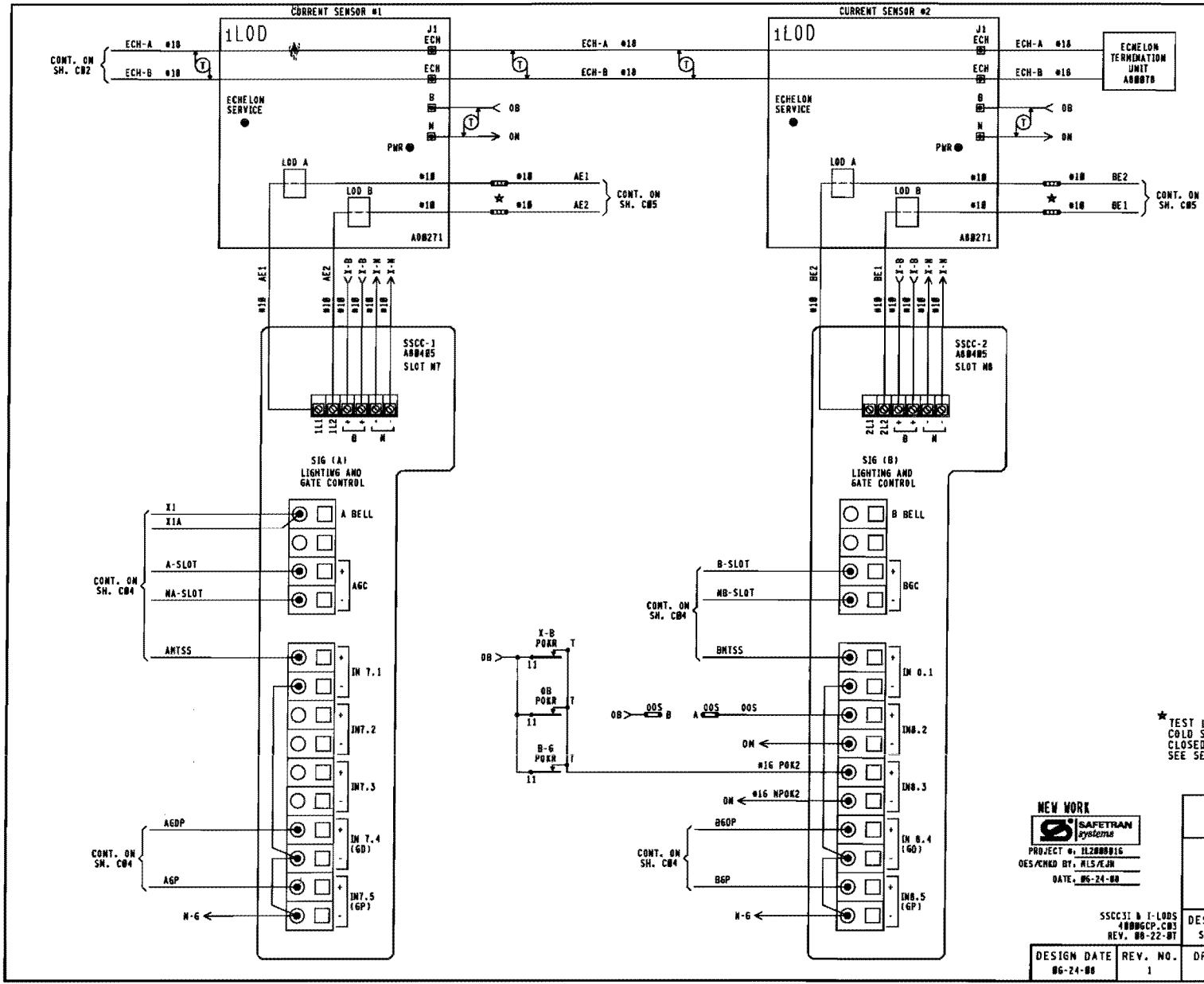

WARNING

BEFORE REMOVING A TRACK FROM SERVICE COMPLIANCE WITH TRAIN CONTROL JUMPER POLICY, TCR 1525-01, MUST BE ASSURED.

TO ENABLE THE REMOVAL OF A TRACK FROM SERVICE, APPLY A JUMPER CONNECTING OOS TERMINAL (A) TO OOS TERMINAL (B).

★ TEST LINKS MUST BE OPENED TEMPORARILY FOR COLD START OF REPLACEMENT SSCC MODULES AND CLOSED IN SEQUENCE WITH MFR. INSTRUCTIONS. SEE SECTION 8.8 OF 4000GCP REFERENCE MANUAL.

NEW WORK

SAFETRAN systems

PROJECT #: 1L2000016
DES/CHKD BY: MLS/EJH
DATE: 06-24-00

CSX TRANSPORTATION
RAIL TRANSPORT GROUP ENGINEERING
COMMUNICATIONS AND SIGNALS

WILLOWS TO CP GALE

KING ROAD 546513J

DETECTION CIRCUITRY CWE-80

SMITHBORO, IL M.P. QS-104.00

SSCC3I & I-LODS
4000GCP.C03
REV. 06-22-07

DESIGNED	DIGITIZED	CHECKED	DATE
SAF/MLS	SAF/MLS	SAF/EJH	06-24-00

DESIGN DATE	REV. NO.	DRAWING	SHEET NO	FILE	SHEET
06-24-00	1	-----	-----	QS10400	C03

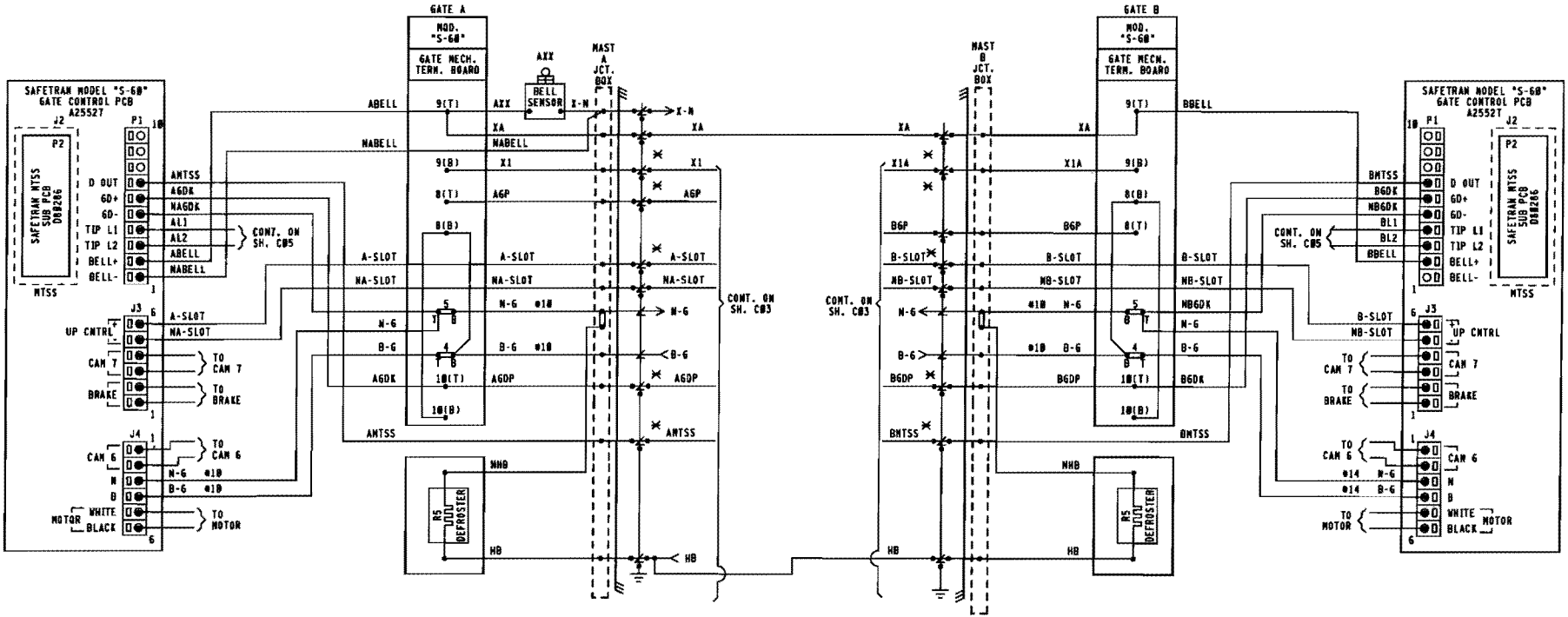

NOTES:

1. ✕ = TEST LINKS MUST BE OPEN TEMPORARILY FOR COLD START OF REPLACEMENT SSCC MODULES AND AND CLOSED IN SEQUENCE WITH MFR. INSTRUCTIONS. SEE SECTION 8.8 OF 4000GCP REFERENCE MANUAL.
2. = TERMINAL IN JCT. BOX BASE
3. ALL WIRING #16 UNLESS NOTED OTHERWISE.

NEW WORK

SAFETRAN systems

PROJECT #: IL2000016
DES/CHKD BY: MLS/EJH
DATE: 06-24-08

CSX TRANSPORTATION
RAIL TRANSPORT GROUP ENGINEERING
COMMUNICATIONS AND SIGNALS

WILLOWS TO CP GALE

KING ROAD 546513J

CROSSING WARNING DEVICE GATE CIRCUITRY

SMITHBORO, IL M.P. QS-184.88

SG0 GATE WIRING.C04A
REV 09-05-07

DESIGNED	DIGITIZED	CHECKED	DATE
SAF/MLS	SAF/MLS	SAF/EJH	06-24-08

DESIGN DATE	REV. NO.	DRAWING	SHEET NO	FILE	SHEET
06-24-08	1	-----	-----	QS18488	C04

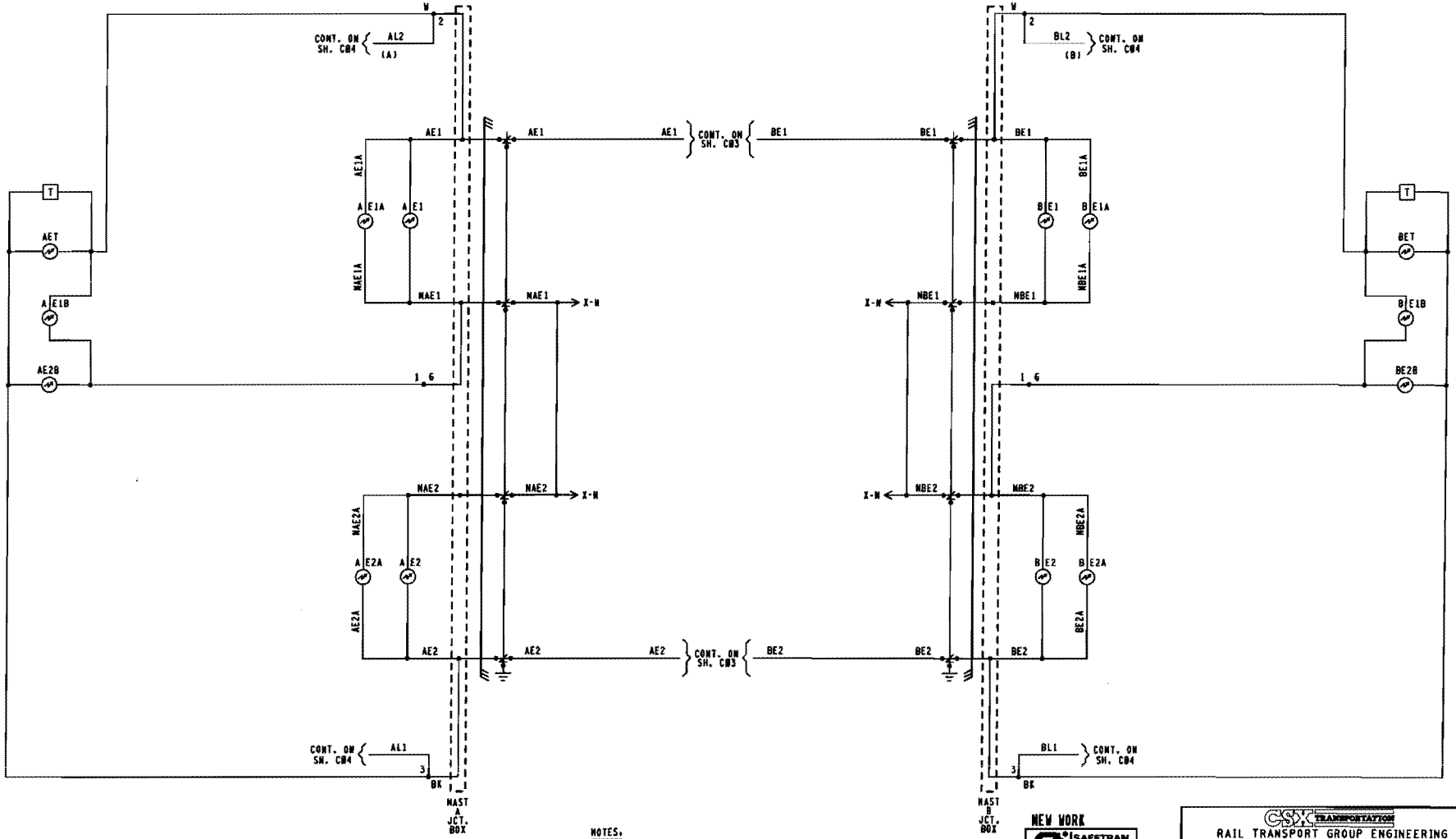

NOTES:

1. [ ] = TERMINAL IN JUNCTION BOX
2. WHEN T OR MORE LIGHTS ON A SINGLE STRUCTURE REFER TO SS382 FOR REQUIRED ARRESTERING
3. FEEDS TO ALL BUSSES AND LIGHT CIRCUITS ARE #10 FLEX
4. UNLESS NOTED ALL OTHER WIRING #16
5. CABLING SPECIFICATIONS SHOWN ON SH. S01
6. [T] = TIP SENSOR

NEW WORK

SAFETRAN systems

PROJECT #: IL2000016
DES/CWRD BY: MLS/EJH
DATE: 06-24-00

CSX TRANSPORTATION
RAIL TRANSPORT GROUP ENGINEERING
COMMUNICATIONS AND SIGNALS

WILLOWS TO CP GALE

KING ROAD 546513J

CROSSING WARNING DEVICE LIGHT CIRCUITRY

SMITHBORO, IL N.P. QS-184.60

4K-LAMP WIRING.DGN
REV. 02-29-00

DESIGNED	DIGITIZED	CHECKED	DATE
SAF/MLS	SAF/MLS	SAF/EJH	06-24-00

DESIGN DATE	REV. NO.	DRAWING	SHEET NO	FILE	SHEET
06-24-00	1	-----	-----	QS18400	C05

WAYSIDE ACCESS GATEWAY CONFIGURATION	
SITE ATCS ADDRESS	7.125.412.010.07.01 7.125.LLL.666.SS.DD
SERIAL INTERFACE	38,400,NONE,8,1/NOFLOW
SERIAL FORMAT	RAW
WAG TEST MODE	DISABLED
ECHELON ADDRESS	01.07
UDP PORTS	5000, 5001, 5002, 5003
ROUTE TABLE EXPIRY	5400 SEC
BROADCAST MEDIUM	IP ETHERNET
TCP PORTS	23, 10023, 6001, 6002
DHCP SERVER	DISABLED
IP ADDRESS	192.168.13.1
TYPE 7 ROUTE LENGTH	12--7RRLLL666SS
IP NETWORK MASK	255.255.255.0
WAG CIRCUIT ID	DISABLE
ROUTING REGION DOMAIN 1	OCGSERVER1.JAX.COM
ATCS SERVER UDP PORT NUMBER	6001
TELNET NUMBERS	WAG 6002, SERIAL 10023
DEFAULT GATEWAY IP	192.168.013.031

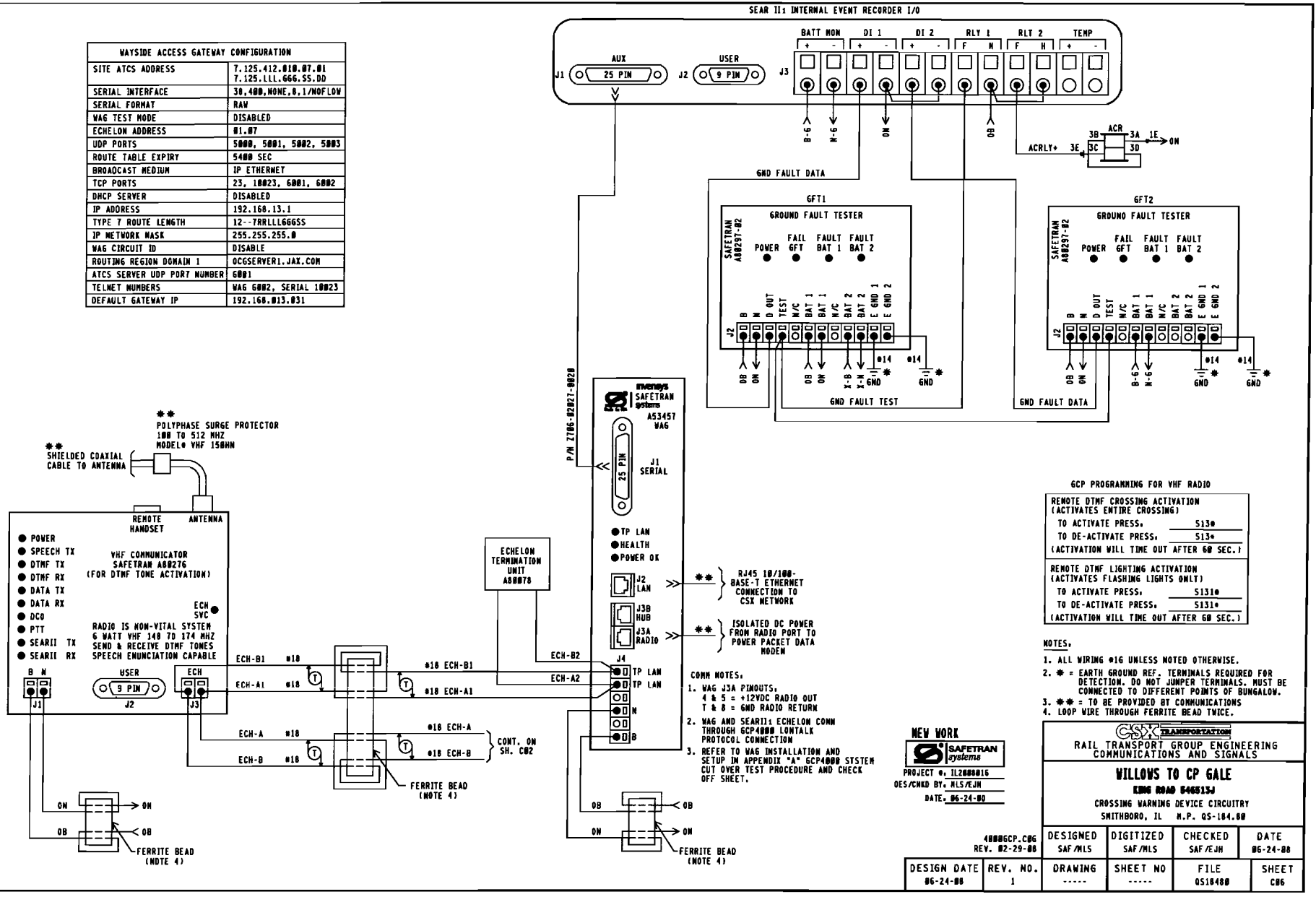

	DEFAULTS AND/OR STYLE	FIELD RECORD
SEAR II: EXECUTIVE PROGRAM	VERSION: 9V725A01	VERSION: _____
APPLICATION PROGRAM (IF LOADED)	VERSION: 9V864A01	VERSION: _____

NOTE TO INSPECTOR: AT IN SERVICE OF SEAR II: OR UPDATE OF ITS INTERNAL EXECUTIVE PROGRAM OR ITS CSXT APPLICATION PROGRAM, THE VERSION NUMBER OF EACH PROGRAM MUST BE INSERTED IN THE BLANK FIELDS.

SITE SET UP PROCEDURE	
FUNCTION	LED DISPLAY
DATE/TIME	XX-XX-XXXX XXxXXxXX
AUTOMACTIC DST ADJUSTMENT	YES
TIME ZONE	EASTERN
SITE NAME	KING ROAD
MILEPOST	QS-184.00
DOT NUMBER	546513J
TESTER TYPE	CROSSING
DATE FORMAT	MM-DD-YYYY
TEMP FORMAT	FAHRENHEIT
INDICATE HOLD (SEC)	0
SITE TYPE	COLLECTOR
SITE ATCS ADDRESS	7.125.412.010.99.01 (7.RRR.LLL.666.99.01)
POLL ID	1
OFFICE ADDRESS	2.125.00.0000 (2.RRR.NN.DDDD)
FIELD COMM. DEVICE	VHF COMM. (ECHELON)
MODE	GEN/ATCS
WANS XID	ENABLED
OFFICE COMM. DEVICE	WAG (ECHELON)
USER PORT BAUD	9600
USER PORT DATA BITS	8
USER PORT PARITY	NONE
USER PORT STOP BITS	1
USER PORT FLOW CONTROL	NONE
AUX PORT BAUD	38,400
AUX PORT DATA BITS	8
AUX PORT PARITY	NONE
AUX PORT STOP BITS	1
AUX PORT FLOW CONTROL	NONE
COMM PORT BAUD	9600
COMM PORT DATA BITS	8
COMM PORT PARITY	NONE
COMM PORT STOP BITS	1
COMM PORT FLOW CONTROL	NONE

INSPECTOR NOTE:
CURRENT VALUES MAY VARY DEPENDANT ON FIELD CONDITIONS. MARK UP PER ACTUAL READINGS FOR IN-SERVICE REVISION.

LIT BULB COUNT ON EACH CIRCUIT	NO.	TYPE OF BULB	CURRENT READING IN AMP, AT APPROX. 10.0 V ARRAY VOLTAGE
CURRENT SENSOR (1) AE1, LAMP SET UP	4	☐BULBS ■LED	4.0
CURRENT SENSOR (1) AE2, LAMP SET UP	4	☐BULBS ■LED	4.0
CURRENT SENSOR (2) BE1, LAMP SET UP	4	☐BULBS ■LED	4.0
CURRENT SENSOR (2) BE2, LAMP SET UP	4	☐BULBS ■LED	4.0

VHF RADIO CHANNELS			
1	161.130	5	161.550
2	160.710	6	160.705
3	160.560	7	160.705
4	160.060	8	160.705

NOTE 9

MENU → CONFIGURATION	
MODULE TYPE	WAG
MODULE NAME	DEFAULT
WAG ECHELON MODE	7

MEASURE BATTERY VOLTAGE AT INPUT		
BATTERY VOLTAGE	QB	_____ VOLTS
BATTERY VOLTAGE	X-B	_____ VOLTS
BATTERY VOLTAGE	B-G	_____ VOLTS

NOTE:
REFER TO WAG INSTALLATION AND SETUP IN APPENDIX "A" GCP4000 SYTEM CUT OVER, TEST PROCEDURE AND CHECK OFF SHEET.

	CONTROL SYSTEM CONFIGURATION MENU QUESTIONS	
	OPTION	SELECTION
NOTE 1	RESET NAMES AND MODULES*	YES ☐ NO ☐
	RAILROAD NUMBER	125
	ENTRANCE GATES*	0 ☐ 1 ☐ 2 ■ 3 ☐ 4 ☐ 5 ☐ 6 ☐ 7 ☐ 8 ☐
NOTE 2	EXIT GATES*	0 ■ 1 ☐ 2 ☐ 3 ☐ 4 ☐
	GATE POSITION FAIL*	20 SECS.
	BATTERY BANKS*	1 ☐ 2 ■ 3 ☐
	BATT MON USED*	NO ☐ YES ■
	INTERNAL CROSSING CONTROLLERS*	0 ☐ 1 ☐ 2 ■
	EXTERNAL CROSSING CONTROLLERS*	0 ■ 1 ☐ 2 ☐
NOTE 3	VHF COMMUNICATOR*	YES ■ NO ☐
	ACTIVATION CODE	513
	ACTIVATION TIMEOUT	(60 SEC)
	iLOO MODULES*	0 ☐ 1 ☐ 2 ■ 3 ☐ 4 ☐
NOTE 4	ANY LED BULBS USED*	NO ☐ YES ■
	AUTO INSPECTIONS*	YES ■ NO ☐
NOTE 5	BELL SENSOR*	0 ☐ 1 ■ 2 ☐ 3 ☐ 4 ☐
	BELL SENSOR TSS 1*	NO ☐ YES ■
	BELL SENSOR TSS 2*	NO ■ YES ☐
	BELL SENSOR TSS 3*	NO ■ YES ☐
	BELL SENSOR TSS 4*	NO ■ YES ☐
	BELL SENSOR TSS 5*	NO ■ YES ☐
	BELL SENSOR TSS 6*	NO ■ YES ☐
	BELL SENSOR TSS 7*	NO ■ YES ☐
	BELL SENSOR TSS 8*	NO ■ YES ☐
	BELL ON*	GATES LOWERING ■ GATES MOVING ☐ ALWAYS ☐
	GFT'S	YES ■ NO ☐
	BATTERIES ON GFT1	1 ☐ 2 ■
NOTE 6	GATE TIP SENSORS*	YES ■ NO ☐
	RTU	NO ■ YES ☐
NOTE 7	VHF VOICE CHANNEL	1 ☐ 2 ☐ 3 ☐ 4 ☐ 5 ☐ 6 ☐ 7 ☐ 8 ☐
	DATA CHANNEL	1 ☐ 2 ☐ 3 ☐ 4 ☐ 5 ☐ 6 ☐ 7 ☐ 8 ☐
	FULL APPROACH MOVE ALARMS*	ACTIVATED ■ DO NOT ACTIVATE ☐

NOTE 8	EDIT DIGITAL INPUTS	■ NO ☐ YES
	EDIT BATTERIES	■ NO ☐ YES
	EDIT RELAYS	■ NO ☐ YES
	EDIT INDICATOR LEDS	■ NO ☐ YES
	EDIT TEST LED'S	■ NO ☐ YES
	EDIT iLOD SENSOR	■ NO ☐ YES
	EDIT VHF SETTINGS	■ NO ☐ YES

NOTES:
1. SELECT YES ON INITIAL SET-UP.
2. OPTION AVAILABLE IF GATES = YES
3. OPTION AVAILABLE IF VHF COMMUNICATOR = YES LAST 3 DIGITS OF DOT NUMBER.
4. OPTION AVAILABLE IF iLODS.
5. OPTION AVAILABLE IF BELL SENSORS.
6. OPTION AVAILABLE IF GATES.
7. OPTION AVAILABLE IF VHF RADIO.
8. ONLY YES IN SPECIAL CIRCUMSTANCES.
9. SELECT "MENU" THEN "CONFIGURATION" FROM SEAR II INTERFACE KEYPAD TO ACCESS MODULE CONFIGURATION MENU.

NEW WORK

SAFETRAN systems

PROJECT #: IL2000016
DES/CHKD BY: MLS/EJH
DATE: 06-24-08

◯ = NOTE

4000GCP.C07
REV. 10-26-06

CSX TRANSPORTATION
RAIL TRANSPORT GROUP ENGINEERING
COMMUNICATIONS AND SIGNALS

WILLOWS TO CP GALE

KING ROAD 546513J

SEAR II: CONFIGURATION & FUNCTIONS
SMITHBORO, IL M.P. QS-184.00

DESIGN DATE	REV. NO.	DRAWING	SHEET NO	FILE	SHEET
06-24-08	1	-----	-----	QS16400	C07

DESIGNED	DIGITIZED	CHECKED	DATE
SAF/MLS	SAF/MLS	SAF/EJH	06-24-08

Minimum Program Steps Report

Location and SIN

DOT Number: 546513J
Milepost Number: QS-184.80
Site Name: King Road

SIN: 712541201016 *

* Parameter is part of office check number calculation.

MCF and Template Selection

MCF Name: GCP-TGX-01-2.mcf
MCF Revision: 012
MCFCRC: 0DFE7A0C

Template = 1A.6 Trk B1 *

* Parameter is part of office check number calculation.

Minimum Program Steps

TEMPLATE: track 1-B1, Island
Track 1 : GCP Frequency = 285 Hz
Track 1 : Approach Distance = 2824 ft (See Plans)
Track 1 : Prime Warning Time = 25 sec *
Track 1 : GCP Transmit Level = High (Set in Field)
Track 1 : Isl Frequency = 10.0 kHz

TEMPLATE: SSCC
SSCC-1 Number of GDs = 1 *
SSCC-2 Number of GPs = 1 *
SSCC-2 Number of GDs = 1 *

TEMPLATE: IP assignment SSCC
IN 7.2 = Not Used *
IN 8.2 = Out Of Service IP 1 *
IN 8.4 = GD 2.1 *
IN 8.5 = GP 2.1 *

TEMPLATE: SEAR
SP 3.1 = Not Used *

GCP: track 1
Track 1 : Island Distance = 120 ft *

ADVANCED: out of service
OOS Control = Display+OOS IPs *

ADVANCED: site options
Daylight Savings = On *

SSCC: 1
SSCC-1 Gate Delay = 5 sec *
SSCC 1 : Flash Rate = 55 *
SSCC 1 : Lamp Neutral Test = Off *

SSCC: 2
SSCC-2 Gate Delay = 5 sec *
SSCC 2 : Flash Rate = 55 *
SSCC 2 : Lamp Neutral Test = Off *

SEAR
DI 1 = Gnd Flt Tester 1 *
DI 2 = Gnd Flt Tester 2 *
Rly 1 = Ground Fault Test *
Rly 2 = AC Control *

SEAR: slot 7-8 inputs
IN 7.1 = TSS 1 *
IN 8.1 = TSS 2 *
IN 8.3 = POK 2 *

* Parameter is part of office check number calculation.

Check Numbers

Office Check No. (DT 4.6.0): 204A4289
Office Check Number: 204A4289
Config. Check Number: 5D084175
(Based on MCF Revision 012)

Parameters not part of office check number calculation:

Track 1 : GCP Frequency = 285 Hz
Track 1 : Approach Distance = 2824 ft (See Plans)
Track 1 : GCP Transmit Level = High (Set in Field)
Track 1 : Isl Frequency = 10.0 kHz

NEW YORK
SAFETRAN systems
PROJECT #: IL2000016
DES/CHKD BY: MLS/EJH
DATE: 06-24-08

CSX TRANSPORTATION
RAIL TRANSPORT GROUP ENGINEERING
COMMUNICATIONS AND SIGNALS

WILLOWS TO CP GALE
KING ROAD 546513J
MINIMUM PROGRAM STEPS REPORT CWE-80
SMITHBORO, IL M.P. QS-184.80

4000GCP.P01
REV. 01-28-08

DESIGNED	DIGITIZED	CHECKED	DATE
SAF/MLS	SAF/MLS	SAF/EJH	06-24-08

DESIGN DATE	REV. NO.	DRAWING	SHEET NO	FILE	SHEET
06-24-08	1	-----	-----	QS10400	P01

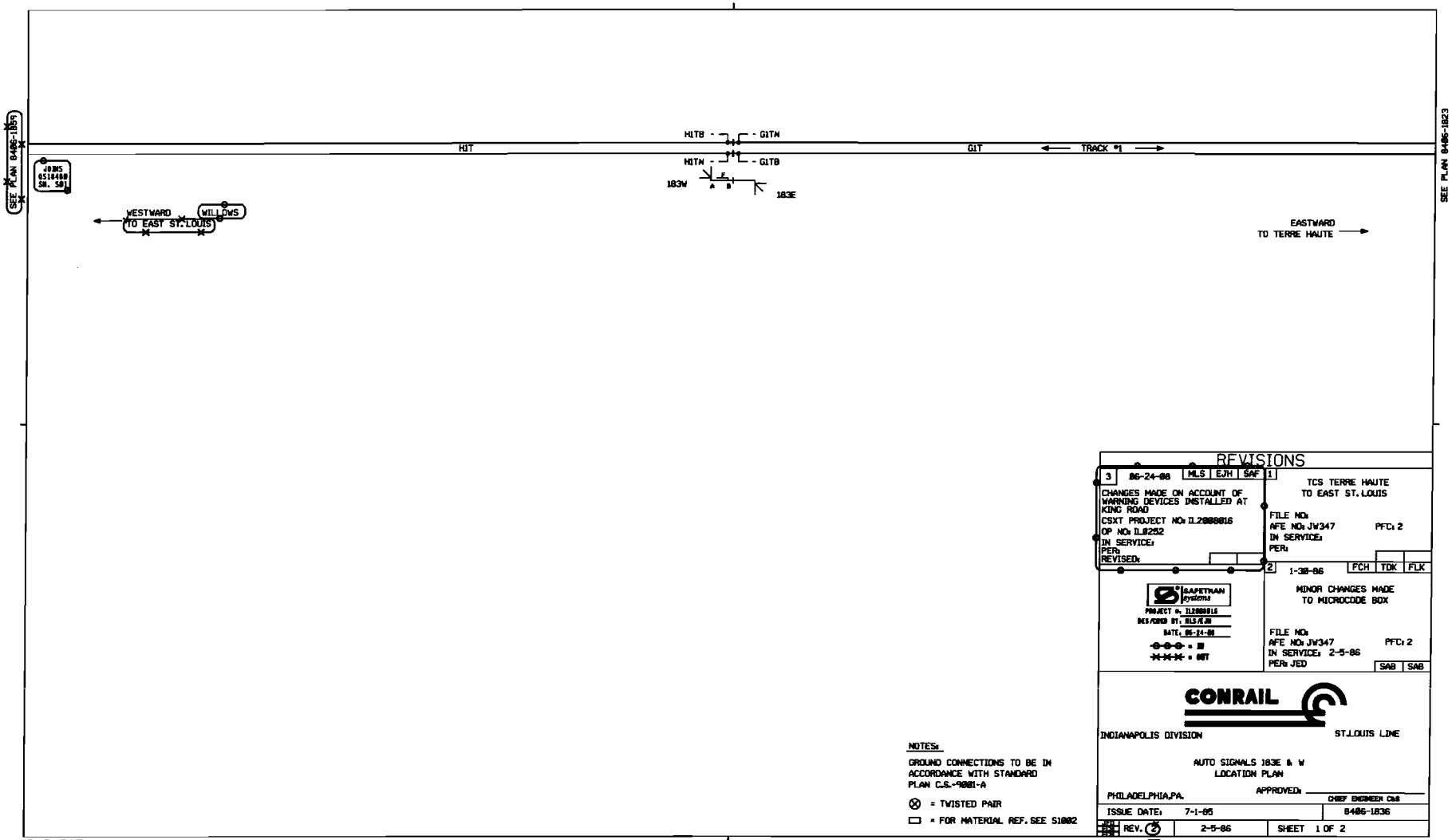
SEE PLAN 8406-1859
JOINS
SH. S01
WESTWARD
TO EAST ST. LOUIS
WILLOWS
H1T
H1TB
H1TN
G1TN
G1TB
183W
183E
A
B
F
G1T
TRACK #1
EASTWARD
TO TERRE HAUTE
SEE PLAN 8406-1823
REVISIONS
3
06-24-08
MLS
EJH
SAF
CHANGES MADE ON ACCOUNT OF WARNING DEVICES INSTALLED AT KING ROAD
CSXT PROJECT NO: IL2008016
OP NO: IL0252
IN SERVICE:
PER:
REVISED:
1
TCS TERRE HAUTE
TO EAST ST. LOUIS
FILE NO:
AFE NO: JW347
PFC: 2
IN SERVICE:
PER:
2
1-30-86
FCH
TDK
FLK
MINOR CHANGES MADE
TO MICROCODE BOX
FILE NO:
AFE NO: JW347
PFC: 2
IN SERVICE: 2-5-86
PER: JED
SAB
SAB
SAFETRAN systems
PROJECT #: IL2008016
DATE: 06-24-08
= IN
= OUT
CONRAIL
INDIANAPOLIS DIVISION
ST.LOUIS LINE
AUTO SIGNALS 183E & W
LOCATION PLAN
PHILADELPHIA,PA.
APPROVED:
CHIEF ENGINEER C&S
ISSUE DATE: 7-1-85
8406-1836
REV. 2
2-5-86
SHEET 1 OF 2
NOTES:
GROUND CONNECTIONS TO BE IN ACCORDANCE WITH STANDARD PLAN C.S.-9001-A
= TWISTED PAIR
= FOR MATERIAL REF. SEE S1002
C&S CAD

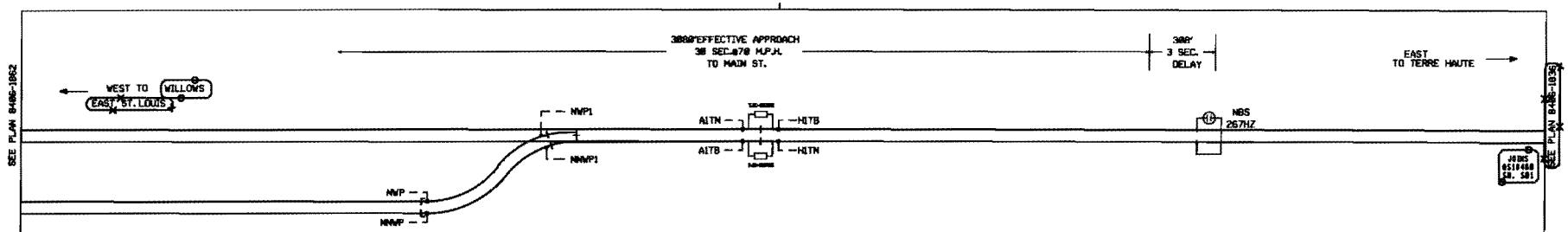

NOTES

▭ = FOR MATERIAL REFERENCE SEE PLAN

⊗ = DENOTES TWISTED PAIR

GROUND IN ACCORDANCE WITH CS-9001-A

REVISIONS

1

TCS TERRE HAUTE
TO EAST ST.LOUIS

SYSTEM FILE NO:
WO/AFE NO: JW347 PFC NO. 2
IN SERVICE: 2-5-86
PER: JED

		SAB	SAB
2	06-24-08	MLS	EJH	SAF

CHANGES MADE ON ACCOUNT OF WARNING DEVICES INSTALLED AT KING ROAD
CSXT PROJECT NO: IL2008016
OP NO: IL0252
IN SERVICE:
PER:
REVISED:

SAFETRAN systems
PROJECT #: IL2008016
DES/CHKD BY: MLS/EJH
DATE: 06-24-08
= IN
= OUT

CONRAIL

INDIANAPOLIS DIVISION ST LOUIS LINE

SMITHBORO, ILL.
NWP AND CUT SECTION
TITLE,NOTES AND REVISIONS

PHILADELPHIA, PA. APPROVED: _____ CHIEF ENGINEER - C&S

ISSUE DATE: 7-1-85		8406-1859
REV. 1	2-5-86	SHEET 1 OF 3

2

C&S CAD

NWP.DGN