FOLDER: 372133T FILE: 372 133T

DS0084B PHASE 3 SUBMITTAL 05-12-04

11.44

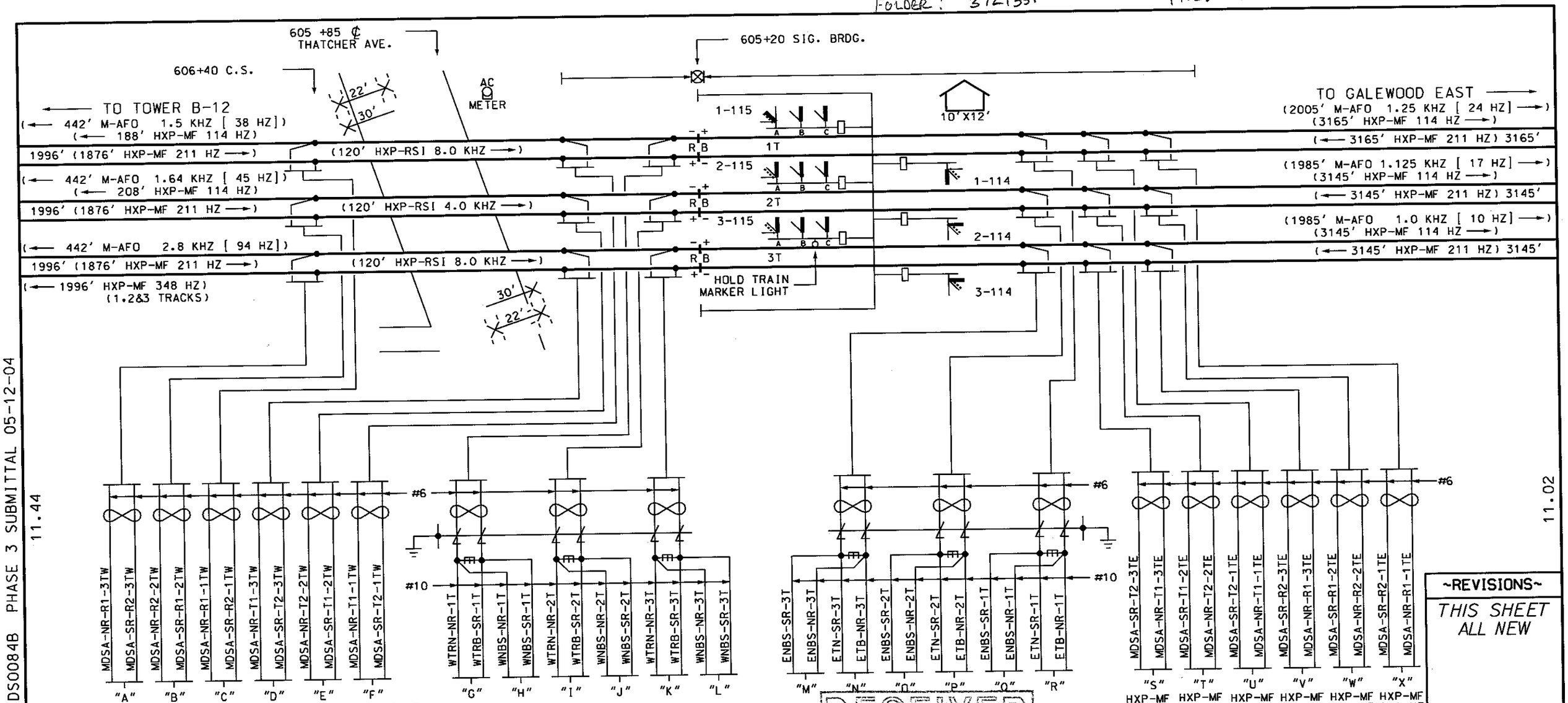

11.02

NOTES:

PRIME GROUND

INDICATES LEADS TO BE WELDED ON RAIL AS CLOSE TOGETHER AS POSSIBLE.

INDICATES CANTILEVER SUPPORTED FLASHING LIGHT SIGNAL PER FHWA MUTCD WITH SIDELIGHTS ON SOUTH SIGNAL AND PEDESTRIAN BELL ON NORTH SIGNAL.

INDICATES AUTOMATIC GATE PER FHWA MUTCD.

(← 2016' HXP-MF 348 HZ)
(← 442' M-AFO 1.5 KHZ [38 HZ])

FREQUENCY
LENGTH OF CIRCUIT
DIRECTION TO TRANSMITTER

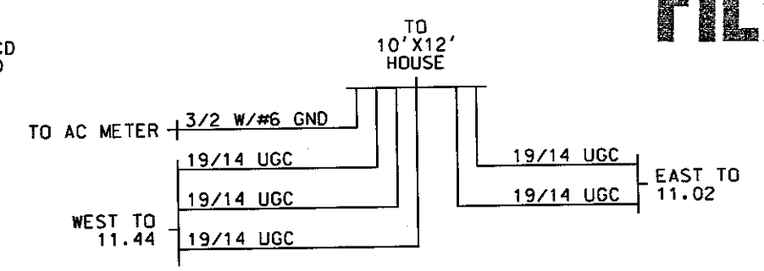

WW & EW APPROACH - 1T & 2T & 3T AT 79 MPH		
MIN. WARNING TIME	=	20 SEC
WIDE XING TIME	=	2 SEC
REACTION TIME	=	5 SEC
RESPONSE TIME	=	5 SEC
APPROACH LENGTH	=	3708 FT.

RECEIVED MAY 17 2004

FILE COPY

~REVISIONS~

THIS SHEET ALL NEW

RECORD 05/12/04

DOT # 372-133T

Metra SIGNAL ENGINEERING CHICAGO, ILLINOIS

CHICAGO TO ELGIN
THATCHER AV. & SIGS 114 & 115
TRACK & SIGNAL DIAGRAM

REFERENCE: 11.40 SH.1 THRU SH.34			DATE: 01/17/04
DESIGNED	DRAWN	CHECKED	APPROVED
TCS	TCS		
DISTRICT	PRINT NUMBER		
MW/W	11.40 SH.1		

DS0084B PHASE 3 SUBMITTAL 05-12-04

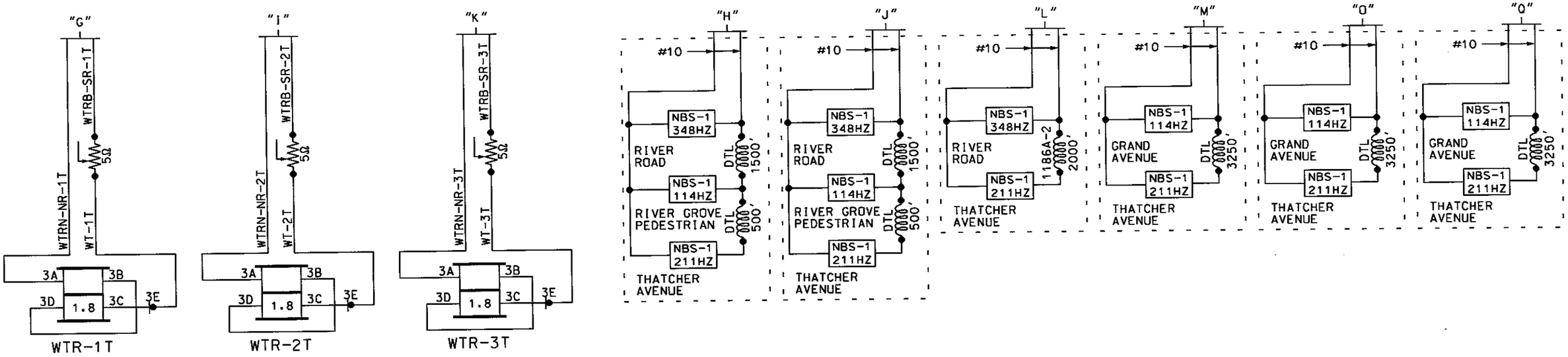

ALL WIRING ON THIS SHEET
#16 AWG UNLESS NOTED

~REVISIONS~

THIS SHEET ALL NEW

RECORD 05/12/04

Metra SIGNAL ENGINEERING CHICAGO, ILLINOIS

CHICAGO TO ELGIN
THATCHER AV. & SIGS 114 & 115
TRACK CONNECTIONS

REFERENCE:			DATE:
11.40 SH.1 THRU SH.34			01/17/04
DESIGNED	DRAWN	CHECKED	APPROVED
TCS	TCS		
DISTRICT	PRINT NUMBER		
MW/W	11.40 SH.2		

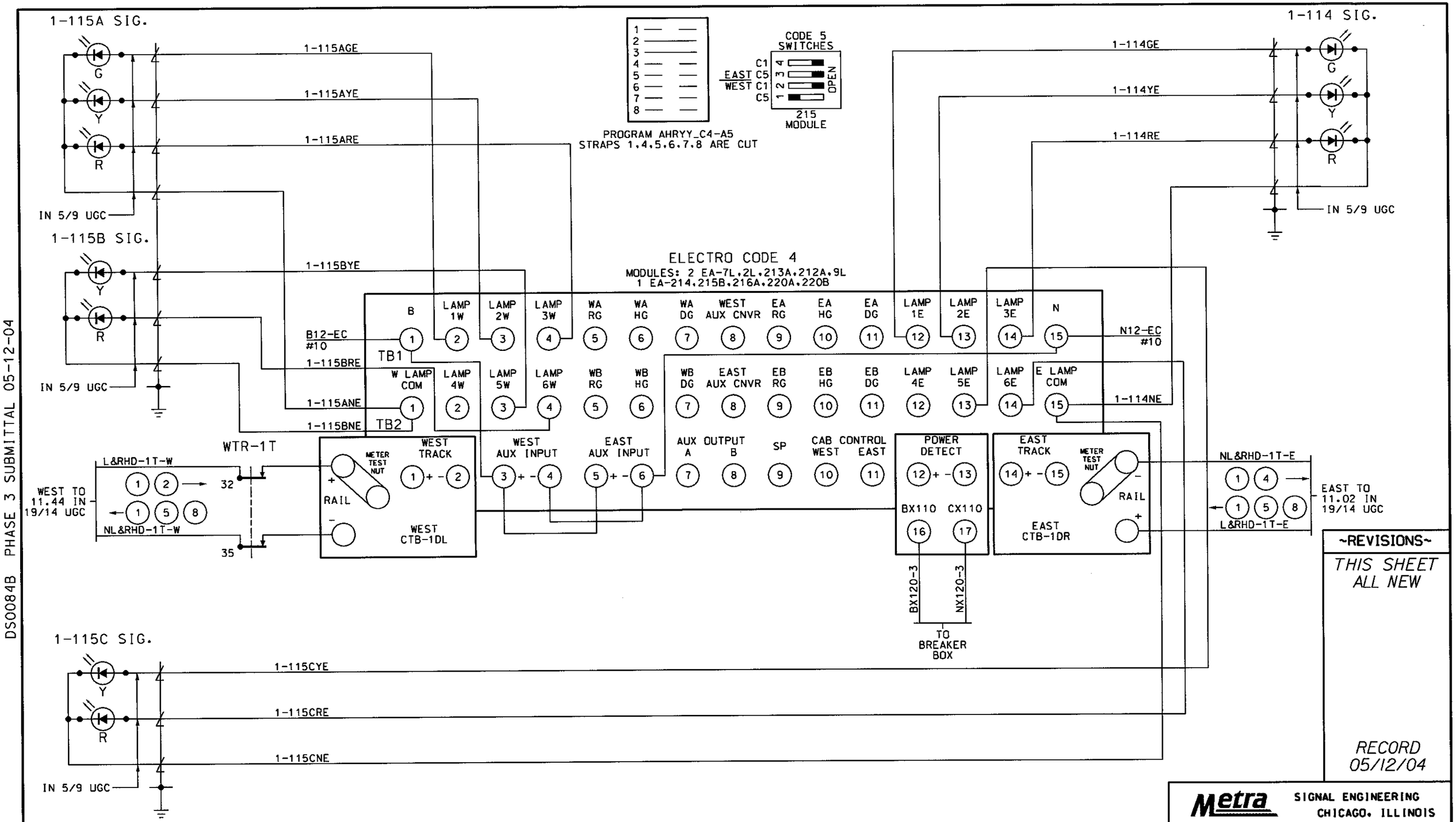

DS0084B PHASE 3 SUBMITTAL 05-12-04

~REVISIONS~

THIS SHEET ALL NEW

RECORD 05/12/04

Metra SIGNAL ENGINEERING CHICAGO, ILLINOIS

CHICAGO TO ELGIN
THATCHER AV. & SIGS 114 & 115
ELECTROCODE 4 TRK.1

REFERENCE:			DATE:
11.40 SH.1 THRU SH.34			01/17/04
DESIGNED	DRAWN	CHECKED	APPROVED
TCS	TCS		
DISTRICT	PRINT NUMBER		
MW/W	11.40 SH.3		

ALL WIRING ON THIS SHEET
#10 AWG UNLESS NOTED

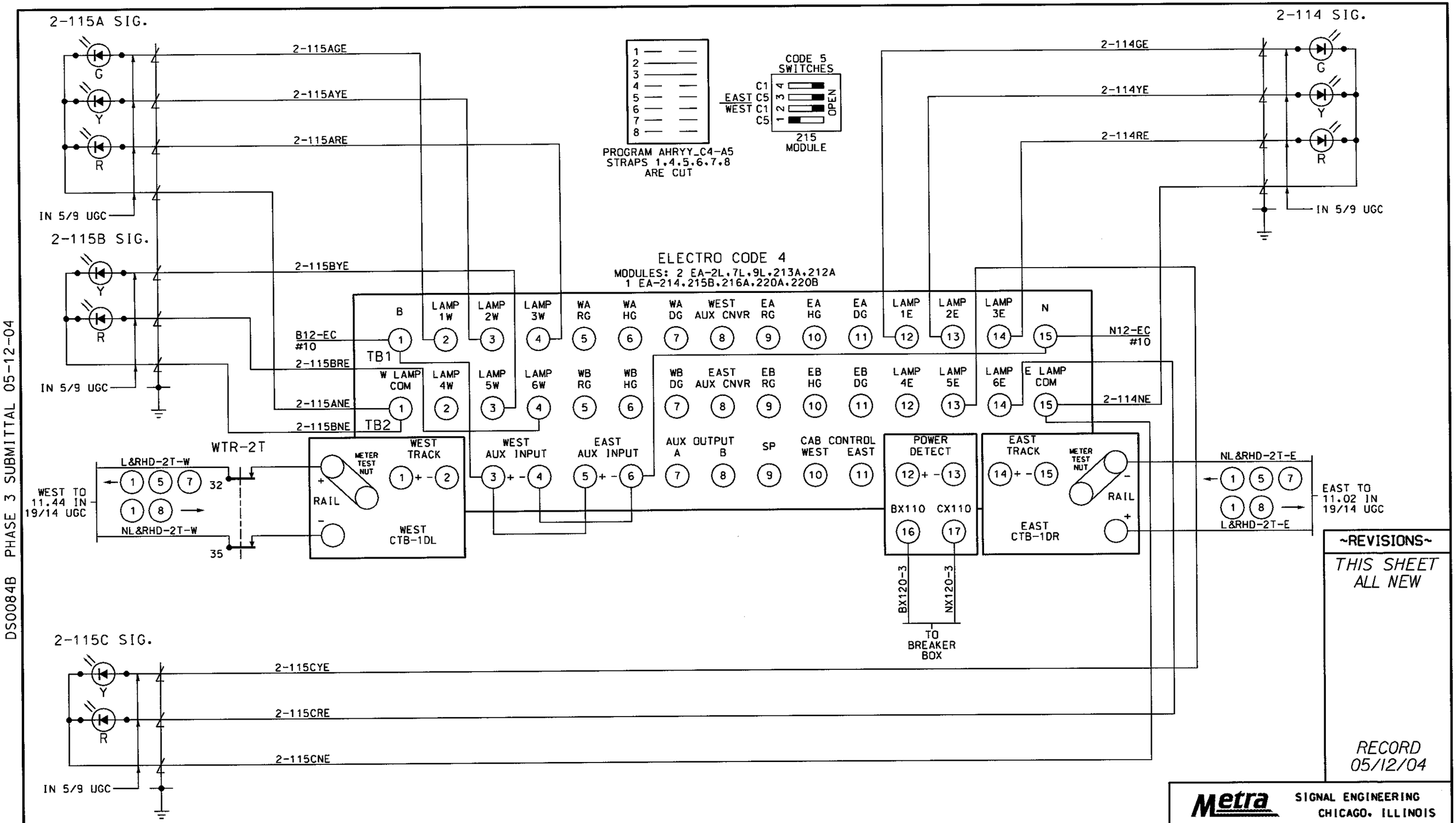

DS0084B PHASE 3 SUBMITTAL 05-12-04

~REVISIONS~

THIS SHEET ALL NEW

RECORD 05/12/04

Metra SIGNAL ENGINEERING CHICAGO, ILLINOIS

CHICAGO TO ELGIN
THATCHER AV. & SIGS 114 & 115
ELECTROCODE 4 TRK. 2

REFERENCE: 11.40 SH.1 THRU SH.34			DATE: 01/17/04
DESIGNED	DRAWN	CHECKED	APPROVED
TCS	TCS		
DISTRICT	PRINT NUMBER		
MW/W	11.40 SH.4		

ALL WIRING ON THIS SHEET
#10 AWG UNLESS NOTED

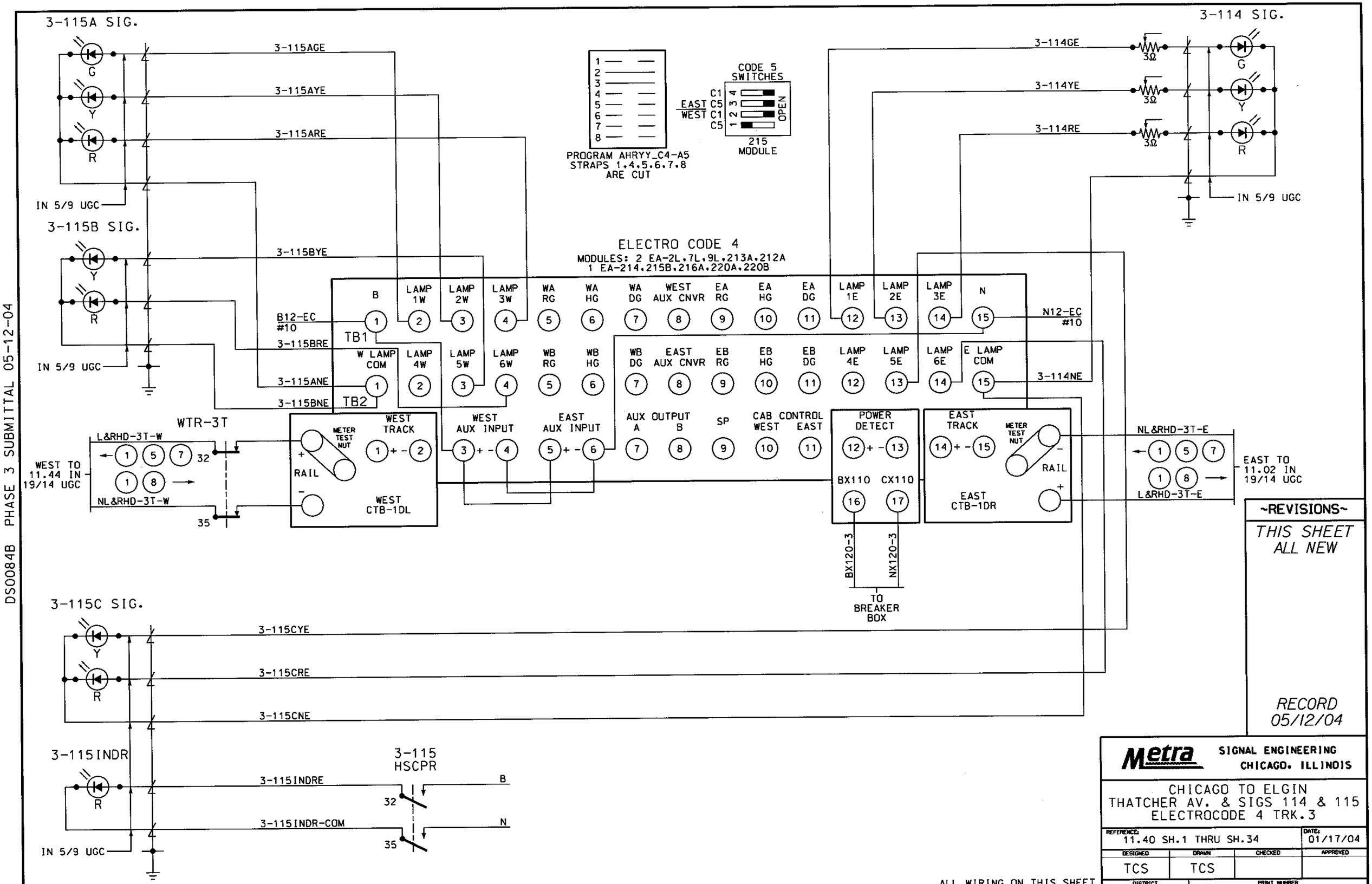

DS0084B PHASE 3 SUBMITTAL 05-12-04

~REVISIONS~

THIS SHEET ALL NEW

RECORD 05/12/04

ALL WIRING ON THIS SHEET #10 AWG UNLESS NOTED

Metra SIGNAL ENGINEERING CHICAGO, ILLINOIS

CHICAGO TO ELGIN
THATCHER AV. & SIGS 114 & 115
ELECTROCODE 4 TRK.3

REFERENCE: 11.40 SH.1 THRU SH.34			DATE: 01/17/04
DESIGNED	DRAWN	CHECKED	APPROVED
TCS	TCS		
DISTRICT	PRINT NUMBER		
MW/W	11.40 SH.5		

TK.1 = TK. 1 WEST
TK.2 = TK. 0
ADJUST SEL

APPROACH LENGTH:
TK.1 - 1876'
TK.2 - 0'

WARNING TIME:
TK.1 - 27 SEC.
TK.2 - SEC.

MD RESTART:
TK.1 - *
TK.2 -

OPTIONS

1. TK-ENA:
   TK.1 - UP
   TK.2 - dn
2. TK FO
   TK.1 - STRAP
   TK.2 -
3. CW/MD
   TK.1 - C
   TK.2 -
4. UNI-BI
   TK.1 - b
   TK.2 -
6. CWEWT
   TK.1 - 80
   TK.2 -
7. LOS
   TK.1 - 16
   TK.2 -
8. IJ-LOS
   TK.1 - 5
   TK.2 -
9. BC
   TK.1 - 133
   TK.2 -
10. P-COMP
    TK.1 - 0
    TK.2 -
11. AX 1
    TK-ASN - 1
    OF-TK1 - 4775'
    WT - 53
    MD-RST - 0
    CW/MD - C
    CJ-LOS - 0
    PJ-DET - 15
    PJ-RX - 15
    POS-ST - dn
12. AX 2
    TK-ASN - NA
    OF-TK - 188'
    WT - NA
    MD-RST - 0
    CW/MD - C
    CJ-LOS - 0
    PJ-DET - 15
    PJ-RX - 15
    POS-ST - dn
13. AX 3
    TK-ASN - NA
    OF-TK - NA
    WT -
    MD-RST -
    CW/MD -
    CJ-LOS - 0
    PJ-DET - 15
    PJ-RX - 15
    POS-ST - dn
17. MDR-AX - 0
18. MD-TMR
    TK.1 - 10
    TK.2 - NA
19. MIN-WT - 0
20. FS-DET - 0
21. POS-RX - 0
    POS-TM - 0
22. AR-RX - 0
    AR-TM - 0
47. ATO-RX - UP
48. PF-ENA - dn

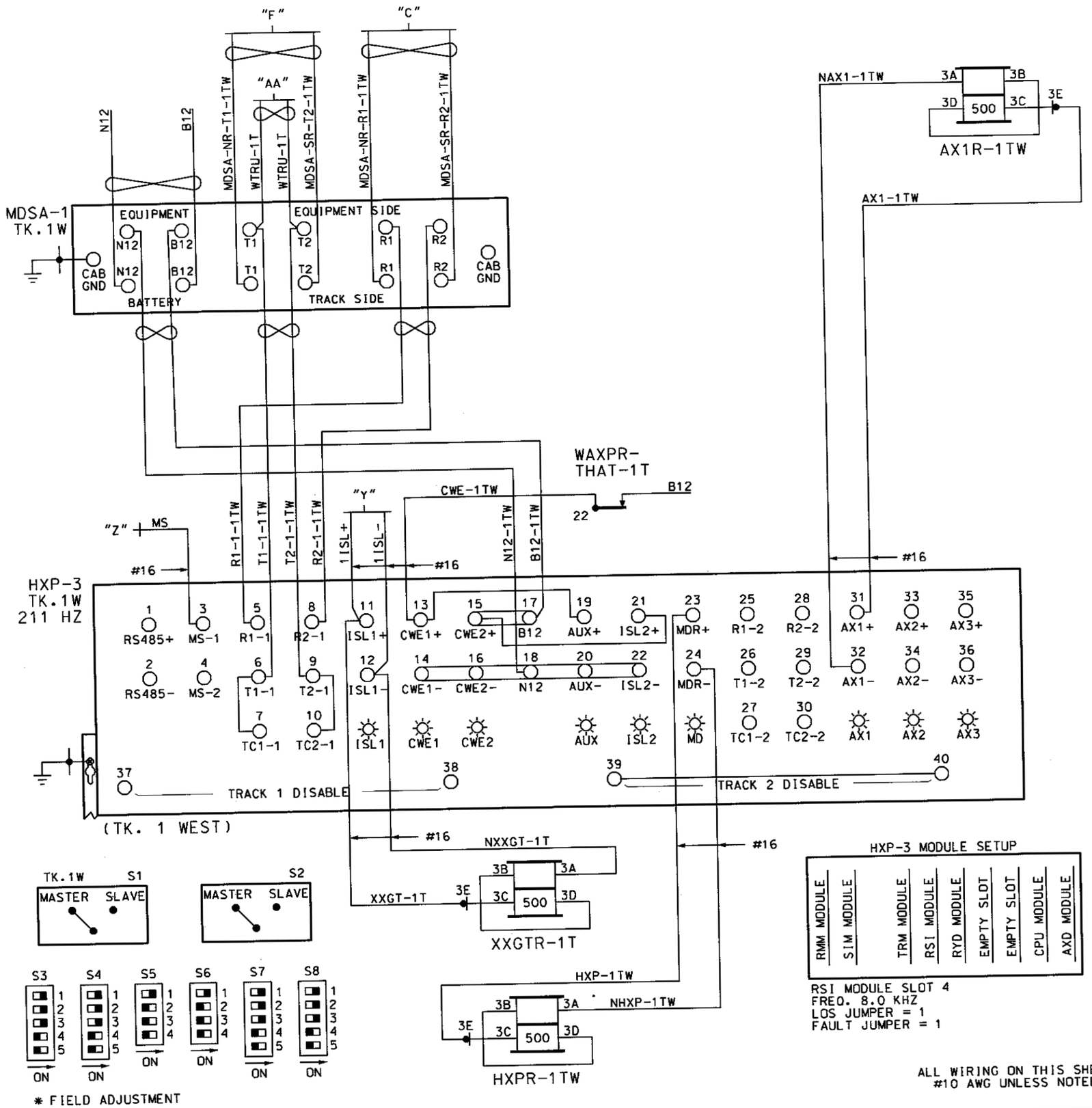

* FIELD ADJUSTMENT

~REVISIONS~

THIS SHEET
ALL NEW

RECORD
05/12/04

Metra SIGNAL ENGINEERING
CHICAGO, ILLINOIS

CHICAGO TO ELGIN
THATCHER AV. & SIGS 114 & 115
CROSSING WARNING CIRCUITS

REFERENCE: 11.40 SH.1 THRU SH.34			DATE: 01/17/04
DESIGNED	DRAWN	CHECKED	APPROVED
TCS	TCS		
DISTRICT	PRINT NUMBER		
MW/W	11.40 SH.6		

DS0084B PHASE 3 SUBMITTAL 05-12-04

TK.1 = TK. 2 WEST
TK.2 = TK. 0

ADJUST SEL

APPROACH LENGTH:
TK.1 - 1896'
TK.2 - 0'

WARNING TIME:
TK.1 - 27 SEC.
TK.2 - SEC.

MD RESTART:
TK.1 - *
TK.2 -

OPTIONS

1. TK-ENA:
TK.1 - UP
TK.2 - dn
2. TK FO
TK.1 - STRAP
TK.2 -
3. CW/MD
TK.1 - C
TK.2 -
4. UNI-BI
TK.1 - b
TK.2 -
6. CWEWT
TK.1 - 80
TK.2 -
7. LOS
TK.1 - 16
TK.2 -
8. IJ-LOS
TK.1 - 5
TK.2 -
9. BC
TK.1 - 133
TK.2 -
10. P-COMP
TK.1 - 0
TK.2 -
11. AX 1
TK-ASN - 1
OF-TK1 - 4656'
WT - 53SEC.
MD-RST - 0
CW/MD - C
CJ-LOS - 0
PJ-DET - 15
PJ-RX - 15
POS-ST - dn
12. AX 2
TK-ASN - 1
OF-TK - 188'
WT -
MD-RST - 0
CW/MD -
CJ-LOS - 0
PJ-DET - 15
PJ-RX - 15
POS-ST - dn
13. AX 3
TK-ASN - NA
OF-TK -
WT -
MD-RST -
CW/MD -
CJ-LOS - 0
PJ-DET - 15
PJ-RX - 15
POS-ST - dn
17. MDR-AX - 0
18. MD-TMR
TK.1 - 10
TK.2 - NA
19. MIN-WT - 0
20. FS-DET - 0
21. POS-RX - 0
POS-TM - 0
22. AR-RX - 0
AR-TM - 0
47. ATO-RX - UP
48. PF-ENA - dn

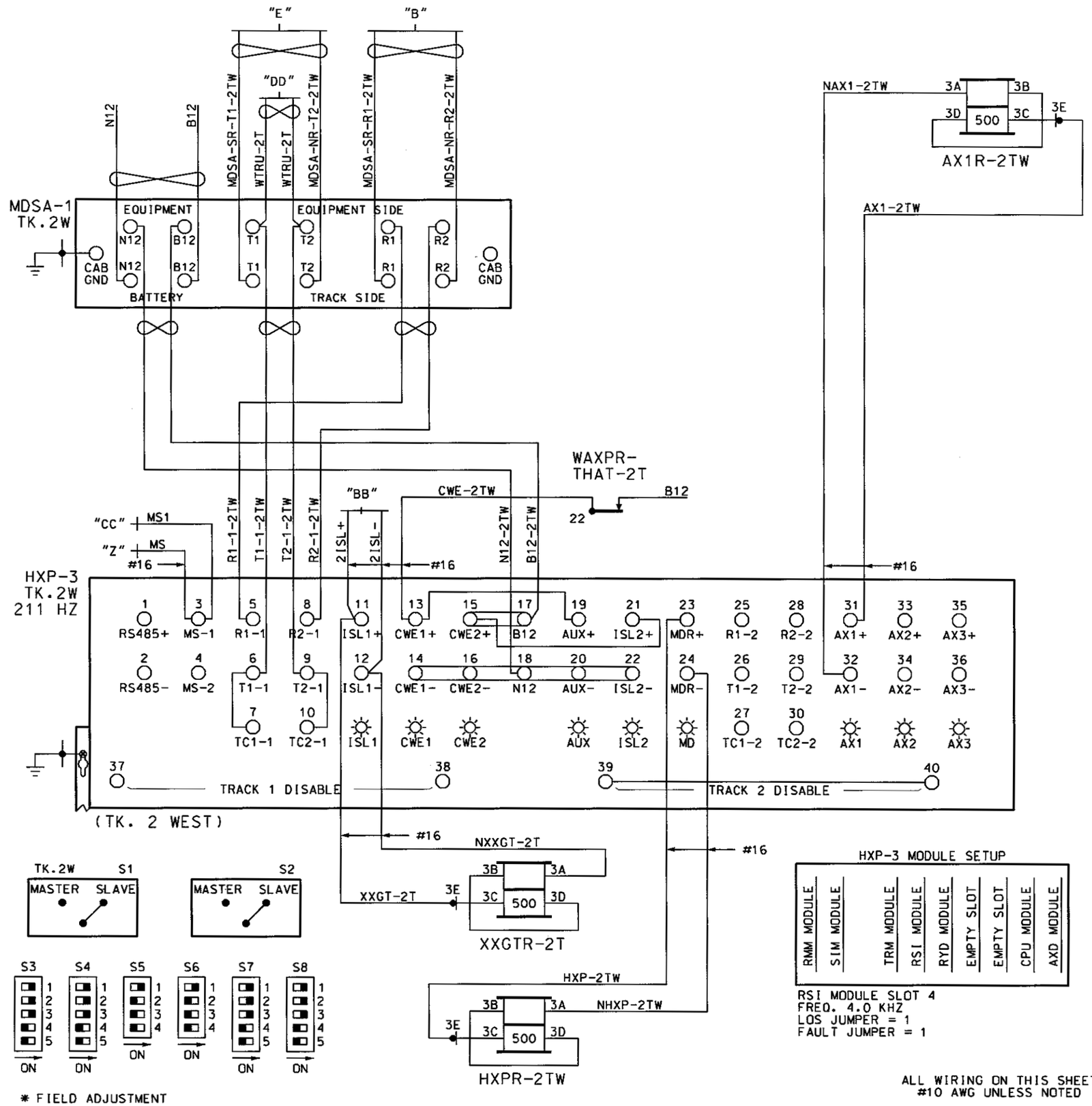

* FIELD ADJUSTMENT

~REVISIONS~

THIS SHEET
ALL NEW

RECORD
05/12/04

Metra SIGNAL ENGINEERING
CHICAGO, ILLINOIS

CHICAGO TO ELGIN
THATCHER AV. & SIGS 114 & 115
CROSSING WARNING CIRCUITS

REFERENCE: 11.40 SH.1 THRU SH.34			DATE: 01/17/04
DESIGNED	DRAWN	CHECKED	APPROVED
TCS	TCS		
DISTRICT	PRINT NUMBER		
MW/W	11.40 SH.7		

DS0084B PHASE 3 SUBMITTAL 05-12-04

TK.1 = TK. 3 WEST
TK.2 = TK. 0
ADJUST SEL

APPROACH LENGTH:
TK.1 - 1896'
TK.2 - 0'

WARNING TIME:
TK.1 - 27 SEC.
TK.2 - SEC.

MD RESTART:
TK.1 - *
TK.2 -

OPTIONS

1. TK-ENA:
   TK.1 - UP
   TK.2 - dn
2. TK FO
   TK.1 - STRAP
   TK.2 -
3. CW/MD
   TK.1 - C
   TK.2 -
4. UNI-BI
   TK.1 - b
   TK.2 -
6. CWEWT
   TK.1 - 80
   TK.2 -
7. LOS
   TK.1 - 16
   TK.2 -
8. IJ-LOS
   TK.1 - 5
   TK.2 -
9. BC
   TK.1 - 133
   TK.2 -
10. P-COMP
   TK.1 - 0
   TK.2 -
11. AX 1
   TK-ASN - 1
   OF-TK1 - 4601'
   WT - 53
   MD-RST - 0
   CW/MD - C
   CJ-LOS - 0
   PJ-DET - 15
   PJ-RX - 15
   POS-ST - dn
12. AX 2
   TK-ASN - NA
   OF-TK -
   WT -
   MD-RST - 0
   CW/MD -
   CJ-LOS - 0
   PJ-DET - 15
   PJ-RX - 15
   POS-ST - dn
13. AX 3
   TK-ASN - NA
   OF-TK -
   WT -
   MD-RST -
   CW/MD -
   CJ-LOS - 0
   PJ-DET - 15
   PJ-RX - 15
   POS-ST - dn
17. MDR-AX - 0
18. MD-TMR
   TK.1 - 10
   TK.2 - NA
19. MIN-WT - 0
20. FS-DET - 0
21. POS-RX - 0
   POS-TM - 0
22. AR-RX - 0
   AR-TM - 0
47. ATO-RX - UP
48. PF-ENA - dn

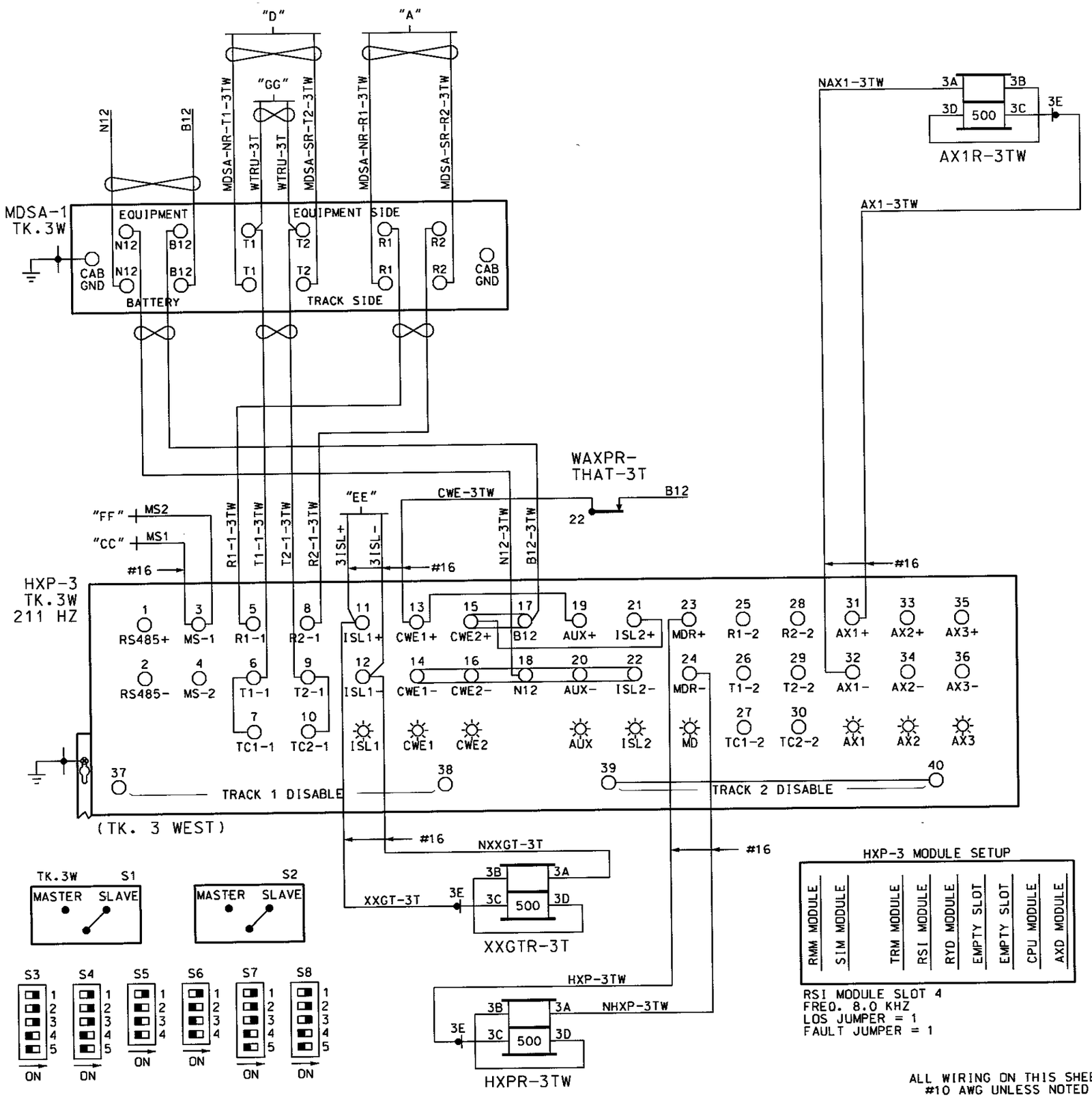

* FIELD ADJUSTMENT

~REVISIONS~

THIS SHEET
ALL NEW

RECORD
05/12/04

Metra SIGNAL ENGINEERING
CHICAGO, ILLINOIS

CHICAGO TO ELGIN
THATCHER AV. & SIGS 114 & 115
CROSSING WARNING CIRCUITS

REFERENCE:			DATE:
11.40 SH.1 THRU SH.34			01/17/04
DESIGNED	DRAWN	CHECKED	APPROVED
TCS	TCS		
DISTRICT	PRINT NUMBER		
MW/W	11.40 SH.8		

DS0084B PHASE 3 SUBMITTAL 05-12-04

TK.1 = TK. 1 EAST
TK.2 = TK. 0

ADJUST SEL

APPROACH LENGTH:
TK.1 - 3165'
TK.2 - 0'

WARNING TIME:
TK.1 - 27 SEC.
TK.2 - SEC.

MD RESTART:
TK.1 - *
TK.2 -

OPTIONS

1. TK-ENA:
   TK.1 - UP
   TK.2 - dn
2. TK FO
   TK.1 - STRAP
   TK.2 -
3. CW/MD
   TK.1 - C
   TK.2 -
4. UNI-BI
   TK.1 - b
   TK.2 -
6. CWEWT
   TK.1 - 80
   TK.2 -
7. LOS
   TK.1 - 16
   TK.2 -
8. IJ-LOS
   TK.1 - 5
   TK.2 -
9. BC
   TK.1 - 133
   TK.2 -
10. P-COMP
    TK.1 - 0
    TK.2 -
11. AX 1
    TK-ASN - 1
    OF-TK1 - 3679'
    WT - 30
    MD-RST - 0
    CW/MD - C
    CJ-LOS - 0
    PJ-DET - 15
    PJ-RX - 15
    POS-ST - dn
12. AX 2
    TK-ASN - 1
    OF-TK - 188'
    WT - 25
    MD-RST - 0
    CW/MD - C
    CJ-LOS - 0
    PJ-DET - 15
    PJ-RX - 15
    POS-ST - dn
13. AX 3
    TK-ASN - NA
    OF-TK -
    WT -
    MD-RST -
    CW/MD -
    CJ-LOS - 0
    PJ-DET - 15
    PJ-RX - 15
    POS-ST - dn
17. MDR-AX - 0
18. MD-TMR
    TK.1 - 10
    TK.2 - NA
19. MIN-WT - 0
20. FS-DET - 0
21. POS-RX - 0
    POS-TM - 0
22. AR-RX - 0
    AR-TM - 0
47. ATO-RX - UP
48. PF-ENA - dn

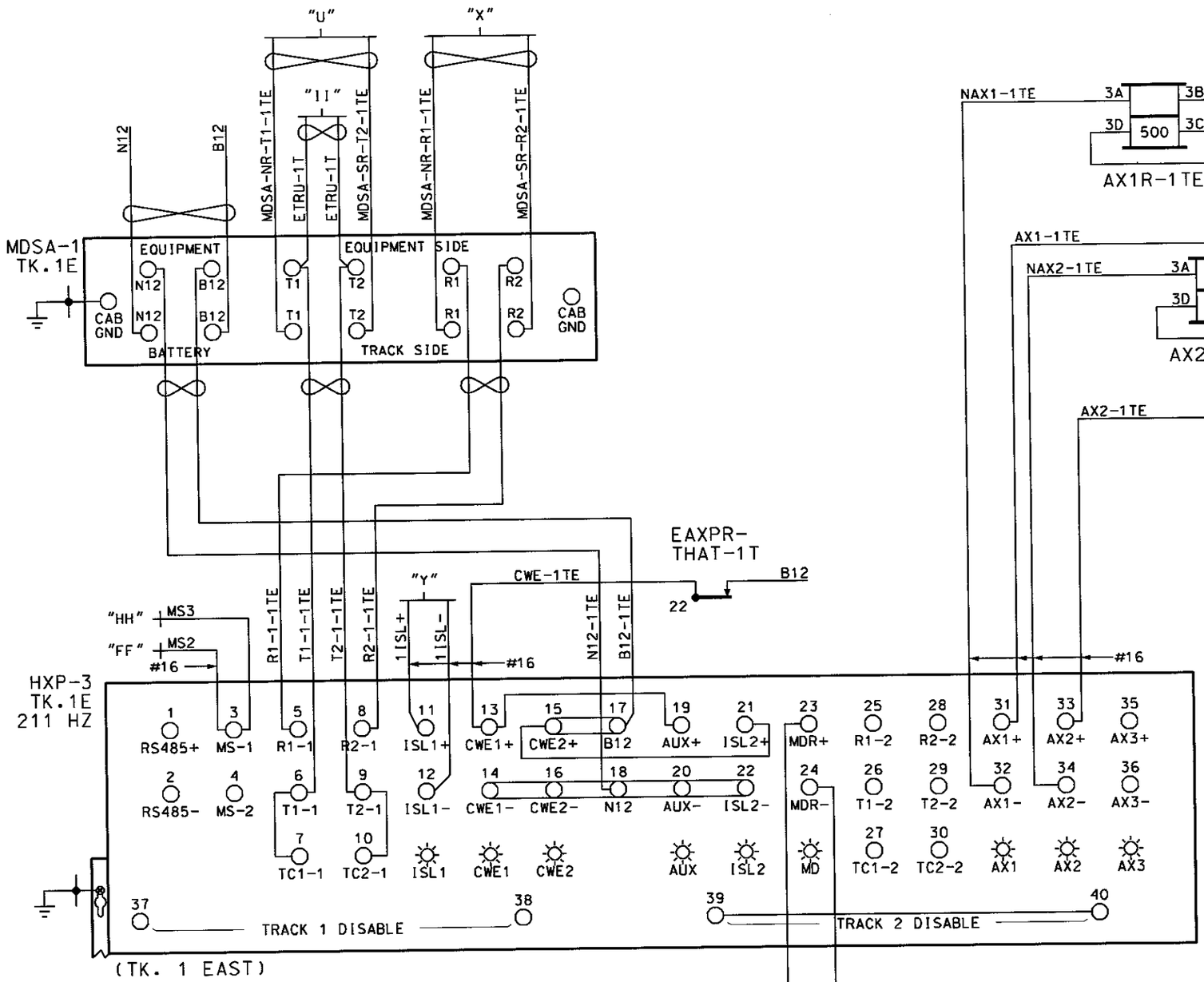

RSI MODULE SLOT NONE
FREQ. KHZ
LOS JUMPER =
FAULT JUMPER =

ALL WIRING ON THIS SHEET
#10 AWG UNLESS NOTED

* FIELD ADJUSTMENT

~REVISIONS~

THIS SHEET
ALL NEW

RECORD
05/12/04

Metra SIGNAL ENGINEERING
CHICAGO, ILLINOIS

CHICAGO TO ELGIN
THATCHER AV. & SIGS 114 & 115
CROSSING WARNING CIRCUITS

REFERENCE: 11.40 SH.1 THRU SH.34			DATE: 01/17/04
DESIGNED	DRAWN	CHECKED	APPROVED
TCS	TCS		
DISTRICT	PRINT NUMBER		
MW/W	11.40 SH.9		

DS0084B PHASE 3 SUBMITTAL 05-12-04

TK.1 = TK. 2 EAST
TK.2 = TK. 0
ADJUST SEL
APPROACH LENGTH:
TK.1 - 3145'
TK.2 - 0'
WARNING TIME:
TK.1 - 27 SEC.
TK.2 - SEC.
MD RESTART:
TK.1 - *
TK.2 -

OPTIONS
1. TK-ENA:
TK.1 - UP
TK.2 - dn
2. TK FO
TK.1 - STRAP
TK.2 -
3. CW/MD
TK.1 - C
TK.2 -
4. UNI-BI
TK.1 - b
TK.2 -
6. CWEWT
TK.1 - 80
TK.2 -
7. LOS
TK.1 - 16
TK.2 -
8. IJ-LOS
TK.1 - 5
TK.2 -
9. BC
TK.1 - 133
TK.2 -
10. P-COMP
TK.1 - 0
TK.2 -
11. AX 1
TK-ASN - 1
OF-TK1 - 3699'
WT - 27
MD-RST - 0
CW/MD - C
CJ-LOS - 0
PJ-DET - 15
PJ-RX - 15
POS-ST - dn
12. AX 2
TK-ASN - 1
OF-TK1 - 208'
WT - 25
MD-RST - 0
CW/MD - C
CJ-LOS - 0
PJ-DET - 15
PJ-RX - 15
POS-ST - dn
13. AX 3
TK-ASN - NA
OF-TK -
WT -
MD-RST -
CW/MD -
CJ-LOS - 0
PJ-DET - 15
PJ-RX - 15
POS-ST - dn
17. MDR-AX - 0
18. MD-TMR
TK.1 - 10
TK.2 - NA
19. MIN-WT - 0
20. FS-DET - 0
21. POS-RX - 0
POS-TM - 0
22. AR-RX - 0
AR-TM - 0
47. ATO-RX - UP
48. PF-ENA - dn

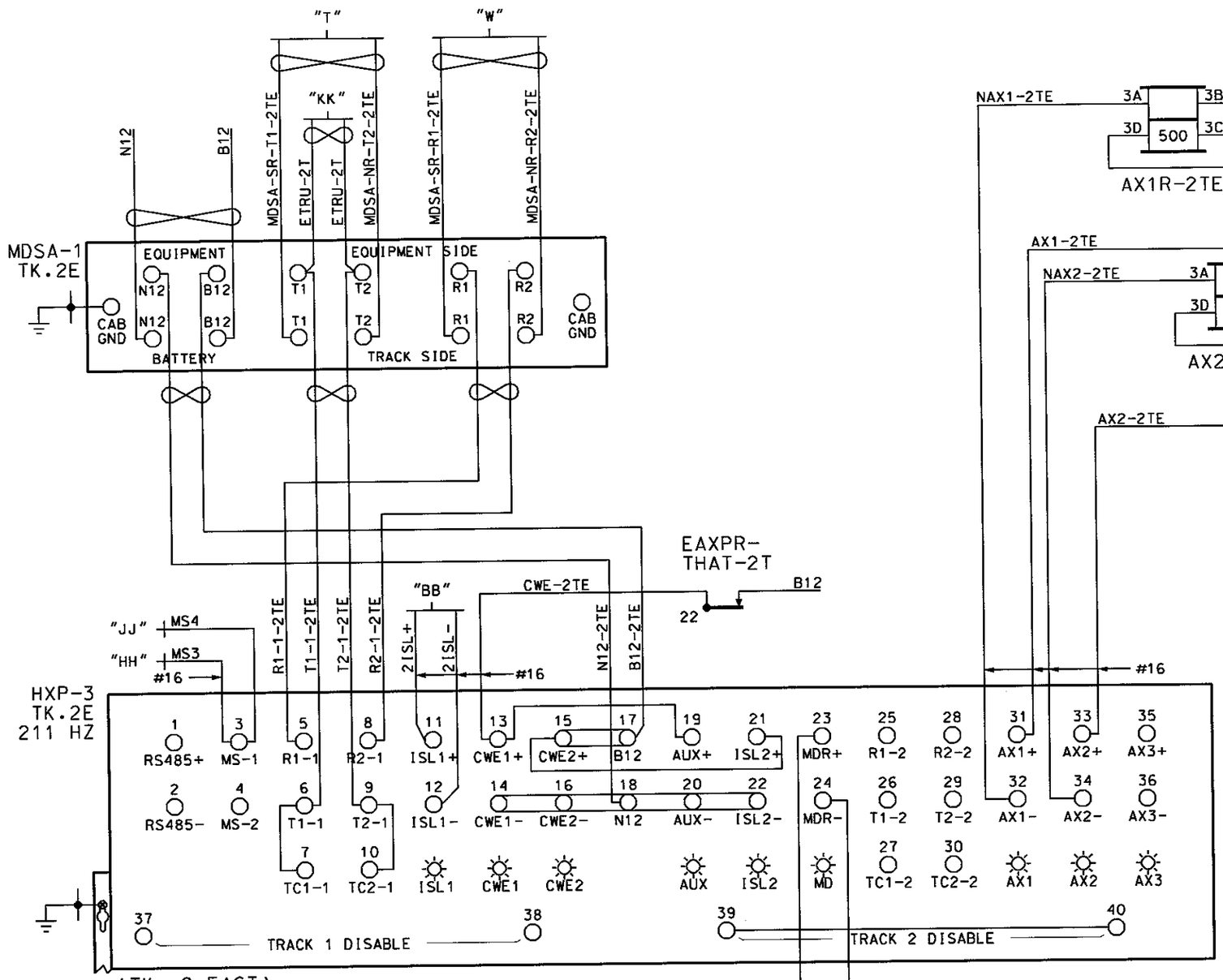

* FIELD ADJUSTMENT

ALL WIRING ON THIS SHEET
#10 AWG UNLESS NOTED

~REVISIONS~

THIS SHEET
ALL NEW

RECORD
05/12/04

Metra SIGNAL ENGINEERING
CHICAGO, ILLINOIS

CHICAGO TO ELGIN
THATCHER AV. & SIGS 114 & 115
CROSSING WARNING CIRCUITS

REFERENCE: 11.40 SH.1 THRU SH.34			DATE: 01/17/04
DESIGNED	DRAWN	CHECKED	APPROVED
TCS	TCS		
DISTRICT	PRINT NUMBER		
MW/W	11.40 SH.10		

DS0084B PHASE 3 SUBMITTAL 05-12-04

TK.1 = TK. 3 EAST
TK.2 = TK. 0

ADJUST SEL

APPROACH LENGTH:
TK.1 - 3145'
TK.2 - 0'

WARNING TIME:
TK.1 - 27 SEC.
TK.2 - SEC.

MD RESTART:
TK.1 - *
TK.2 -

OPTIONS

1. TK-ENA:
   TK.1 - UP
   TK.2 - dn
2. TK FO
   TK.1 - STRAP
   TK.2 -
3. CW/MD
   TK.1 - C
   TK.2 -
4. UNI-BI
   TK.1 - b
   TK.2 -
6. CWEWT
   TK.1 - 80
   TK.2 -
7. LOS
   TK.1 - 16
   TK.2 -
8. IJ-LOS
   TK.1 - 5
   TK.2 -
9. BC
   TK.1 - 133
   TK.2 -
10. P-COMP
   TK.1 - 0
   TK.2 -
11. AX 1
   TK-ASN - 1
   OF-TK1 - 3699'
   WT - 27
   MD-RST - 0
   CW/MD - C
   CJ-LOS - 0
   PJ-DET - 15
   PJ-RX - 15
   POS-ST - dn
12. AX 2
   TK-ASN - NA
   OF-TK1 -
   WT -
   MD-RST -
   CW/MD -
   CJ-LOS - 0
   PJ-DET - 15
   PJ-RX - 15
   POS-ST - dn
13. AX 3
   TK-ASN - NA
   OF-TK -
   WT -
   MD-RST -
   CW/MD -
   CJ-LOS - 0
   PJ-DET - 15
   PJ-RX - 15
   POS-ST - dn
17. MDR-AX - 0
18. MD-TMR
   TK.1 - 10
   TK.2 - NA
19. MIN-WT - 0
20. FS-DET - 0
21. POS-RX - 0
   POS-TM - 0
22. AR-RX - 0
   AR-TM - 0
47. ATO-RX - UP
48. PF-ENA - dn

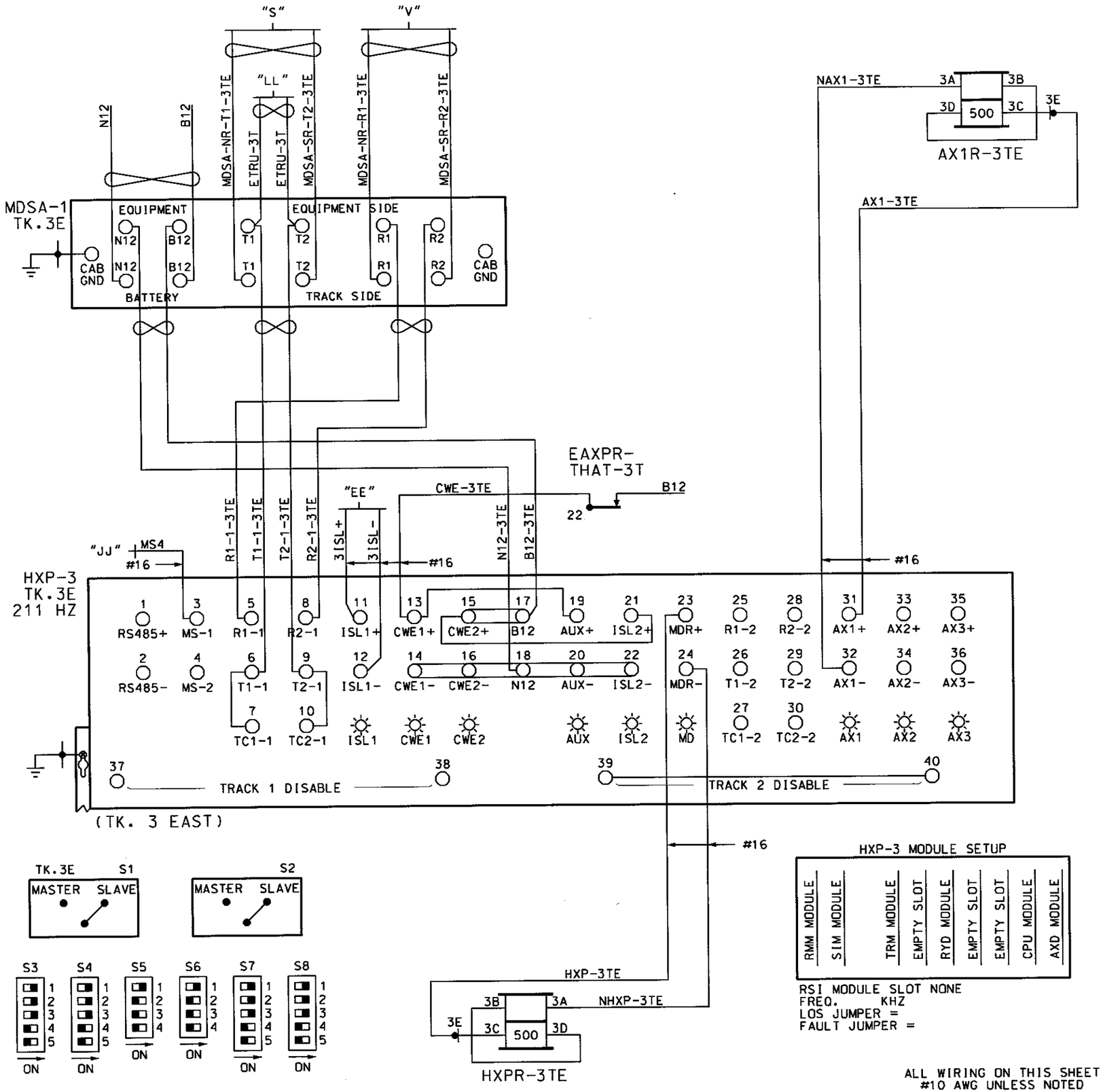

~REVISIONS~

THIS SHEET
ALL NEW

RECORD
05/12/04

Metra SIGNAL ENGINEERING
CHICAGO, ILLINOIS

CHICAGO TO ELGIN
THATCHER AV. & SIGS 114 & 115
CROSSING WARNING CIRCUITS

REFERENCE:			DATE:
11.40 SH.1 THRU SH.34			01/17/04
DESIGNED	DRAWN	CHECKED	APPROVED
TCS	TCS		
DISTRICT	PRINT NUMBER		
MW/W	11.40 SH.11		

DS0084B PHASE 3 SUBMITTAL 05-12-04

DS0084B PHASE 3 SUBMITTAL 05-12-04

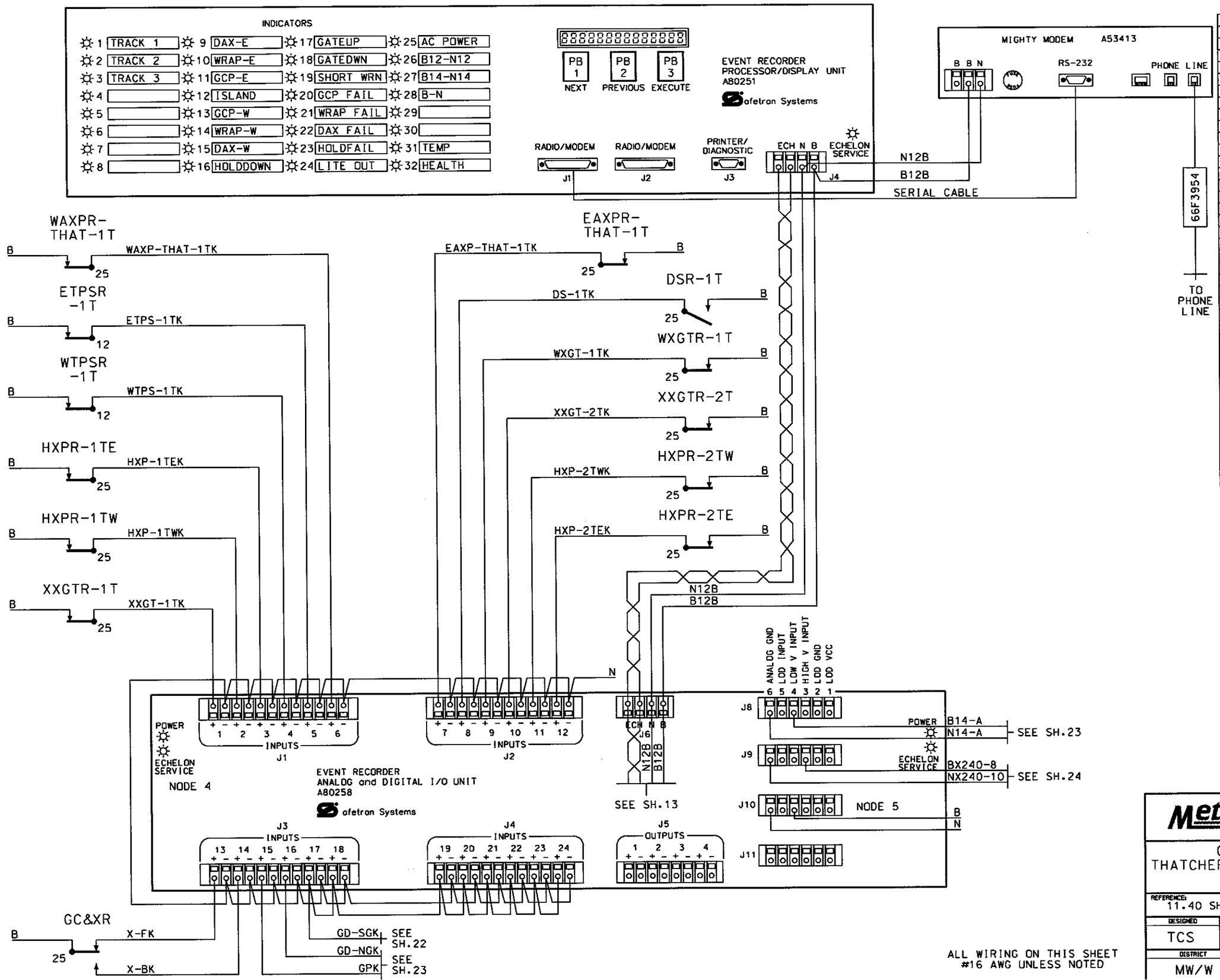

ALL WIRING ON THIS SHEET
#16 AWG UNLESS NOTED

SEA/R PROGRAMMING CHART

CUSTOM FUNCTIONS	
FUNCTION	ON/OFF
1TRACK.ENA	ON
2TRACK.ENA	ON
3TRACK.ENA	ON
4TRACK.ENA	OFF
5TRACK.ENA	OFF
6TRACK.ENA	OFF
GATEALM.ENA	ON
WRNTIME.ENA	ON
GCPFAIL.ENA	ON
HOLDDWN.ENA	ON
LOD1.ENA	ON
LOD2.ENA	ON
LOD3.ENA	OFF
LOD4.ENA	OFF
ACPOWER.ENA	ON
B12/N12.ENA	ON
B14/N14.ENA	ON
B/N.ENA	ON
MASTER	N/A
SLAVE	N/A

CUSTOM TIMERS	
NAME	TIME
GATENOT.DN TMR	17 SEC.
WRN-1T.TIMER	22 SEC.
WRN-2T.TIMER	22 SEC.
WRN-3T.TIMER	22 SEC.
WRN-4T.TIMER	0 SEC.
WRN-5T.TIMER	0 SEC.
WRN-6T.TIMER	0 SEC.

NODE ASSIGNMENT	
NODE 4	DIGITAL BOARD #1
NODE 5	ANALOG BOARD #1
NODE 6	(NOT USED)
NODE 7	(NOT USED)
NODE 9	DIGITAL BOARD #2
NODE 10	ANALOG BOARD #2
NODE 12	(NOT USED)
NODE 13	(NOT USED)

~REVISIONS~

THIS SHEET ALL NEW

RECORD 05/12/04

Metra SIGNAL ENGINEERING CHICAGO, ILLINOIS

CHICAGO TO ELGIN
THATCHER AV. & SIGS 114 & 115
DATA RECORDER

REFERENCE: 11.40 SH.1 THRU SH.34			DATE: 01/17/04
DESIGNED	DRAWN	CHECKED	APPROVED
TCS	TCS		
DISTRICT	PRINT NUMBER		
MW/W	11.40 SH.12		

DS0084B PHASE 3 SUBMITTAL 05-12-04

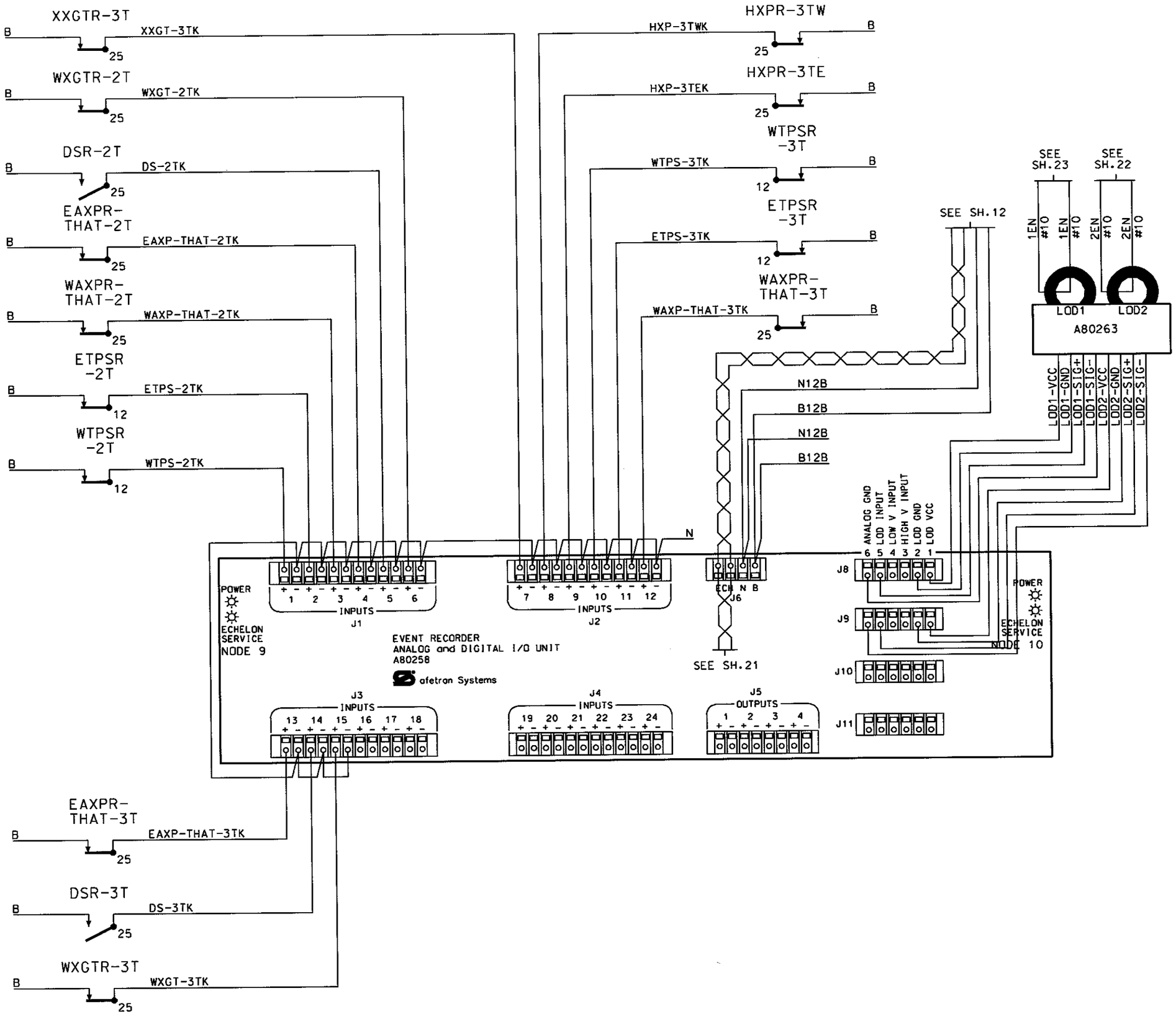

ALL WIRING ON THIS SHEET
#16 AWG UNLESS NOTED

~REVISIONS~

THIS SHEET
ALL NEW

RECORD
05/12/04

Metra SIGNAL ENGINEERING
CHICAGO, ILLINOIS

CHICAGO TO ELGIN
THATCHER AV. & SIGS 114 & 115
DATA RECORDER

REFERENCE:			DATE:
11.40 SH.1 THRU SH.34			01/17/04
DESIGNED	DRAWN	CHECKED	APPROVED
TCS	TCS		
DISTRICT	PRINT NUMBER		
MW/W	11.40 SH.13		

DS0084B PHASE 3 SUBMITTAL 05-12-04

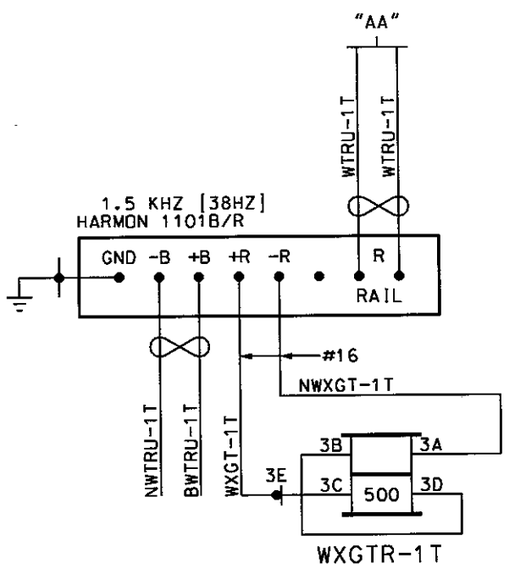

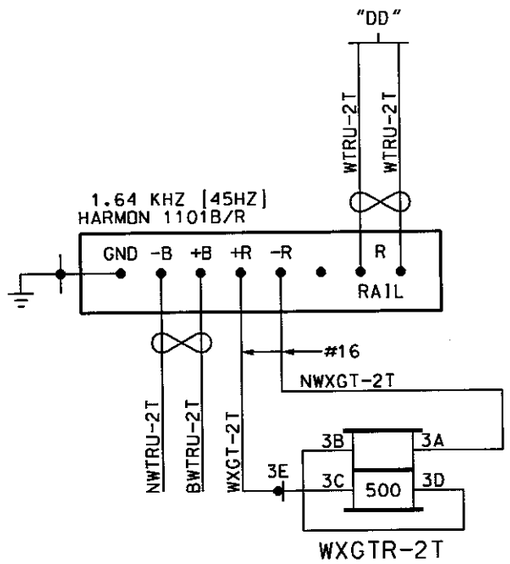

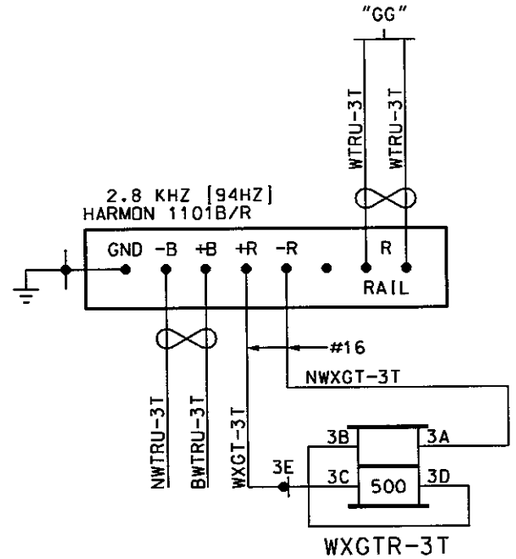

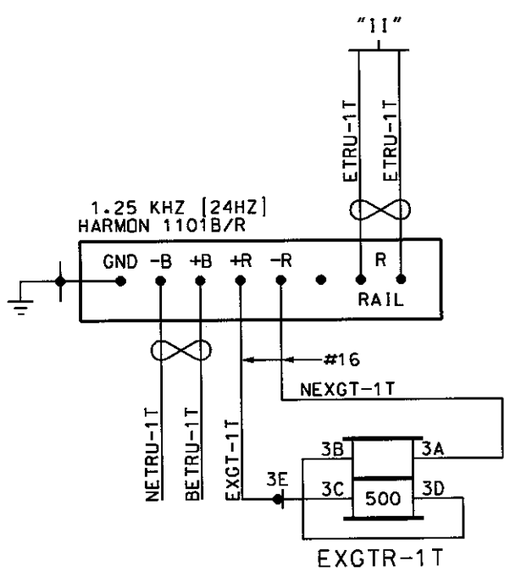

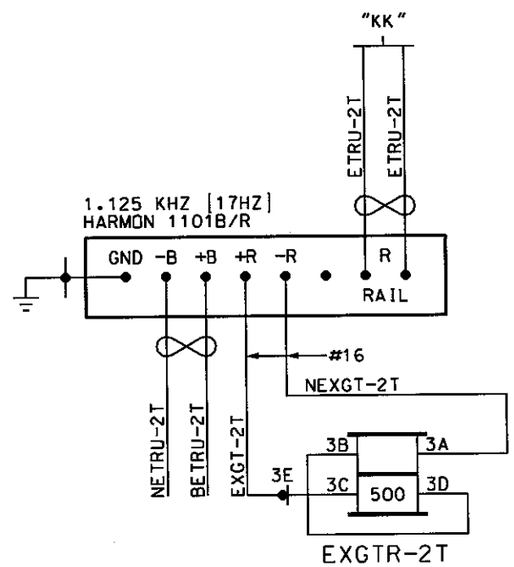

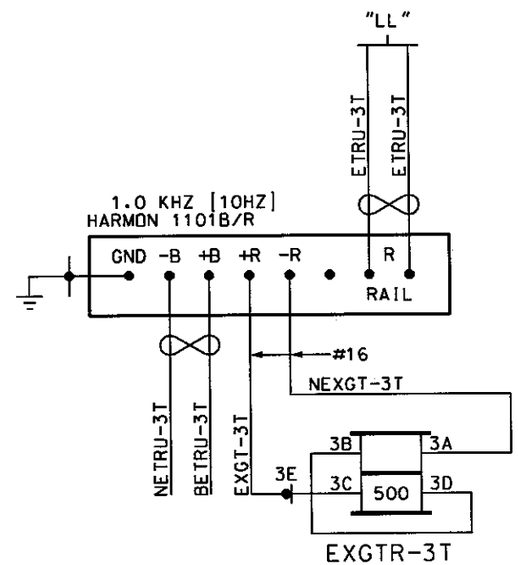

ALL WIRING ON THIS SHEET
#16 AWG UNLESS NOTED

~REVISIONS~

THIS SHEET
ALL NEW

RECORD
05/12/04

Metra SIGNAL ENGINEERING
CHICAGO, ILLINOIS

CHICAGO TO ELGIN
THATCHER AV. & SIGS 114 & 115
AFTAC CIRCUITS

REFERENCE:			DATE:
11.40 SH.1 THRU SH.34			01/17/04
DESIGNED	DRAWN	CHECKED	APPROVED
TCS	TCS		
DISTRICT	PRINT NUMBER		
MW/W	11.40 SH.14		

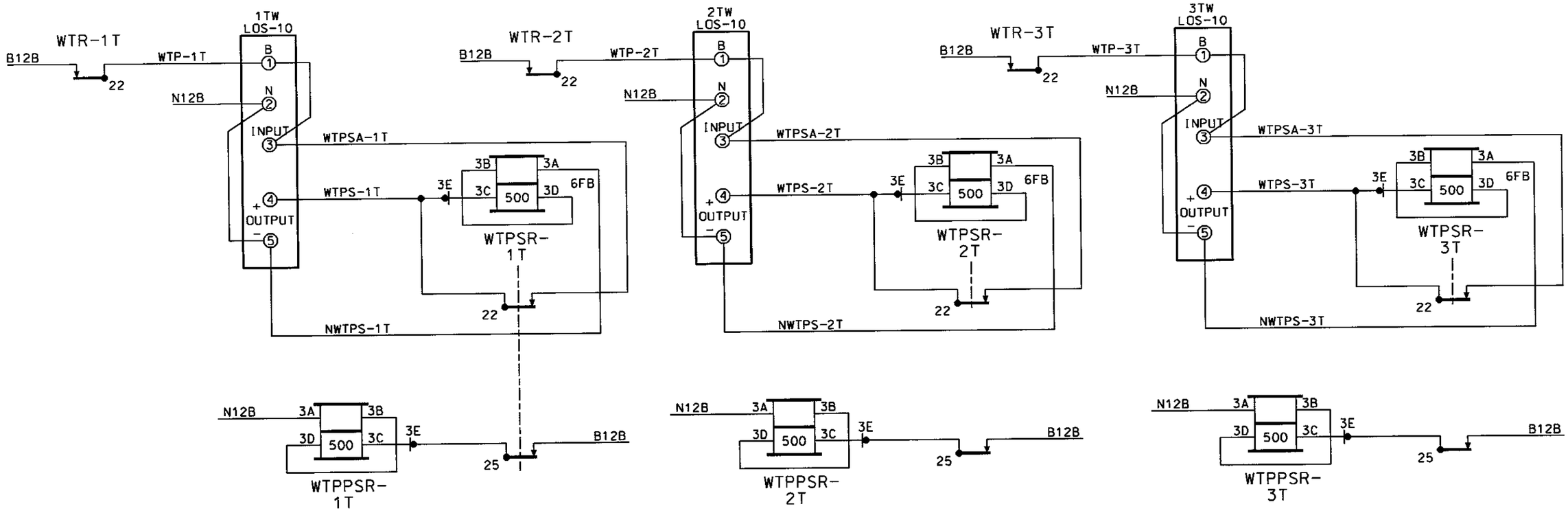

DS0084B PHASE 3 SUBMITTAL 05-12-04

~REVISIONS~

THIS SHEET ALL NEW

RECORD 05/12/04

ALL WIRING ON THIS SHEET #16 AWG UNLESS NOTED

Metra SIGNAL ENGINEERING CHICAGO, ILLINOIS

CHICAGO TO ELGIN
THATCHER AV. & SIGS 114 & 115
LOS CIRCUITS

REFERENCE:			DATE:
11.40 SH.1 THRU SH.34			01/17/04
DESIGNED	DRAWN	CHECKED	APPROVED
TCS	TCS		
DISTRICT	PRINT NUMBER		
MW/W	11.40 SH.15		

DS0084B PHASE 3 SUBMITTAL 05-12-04

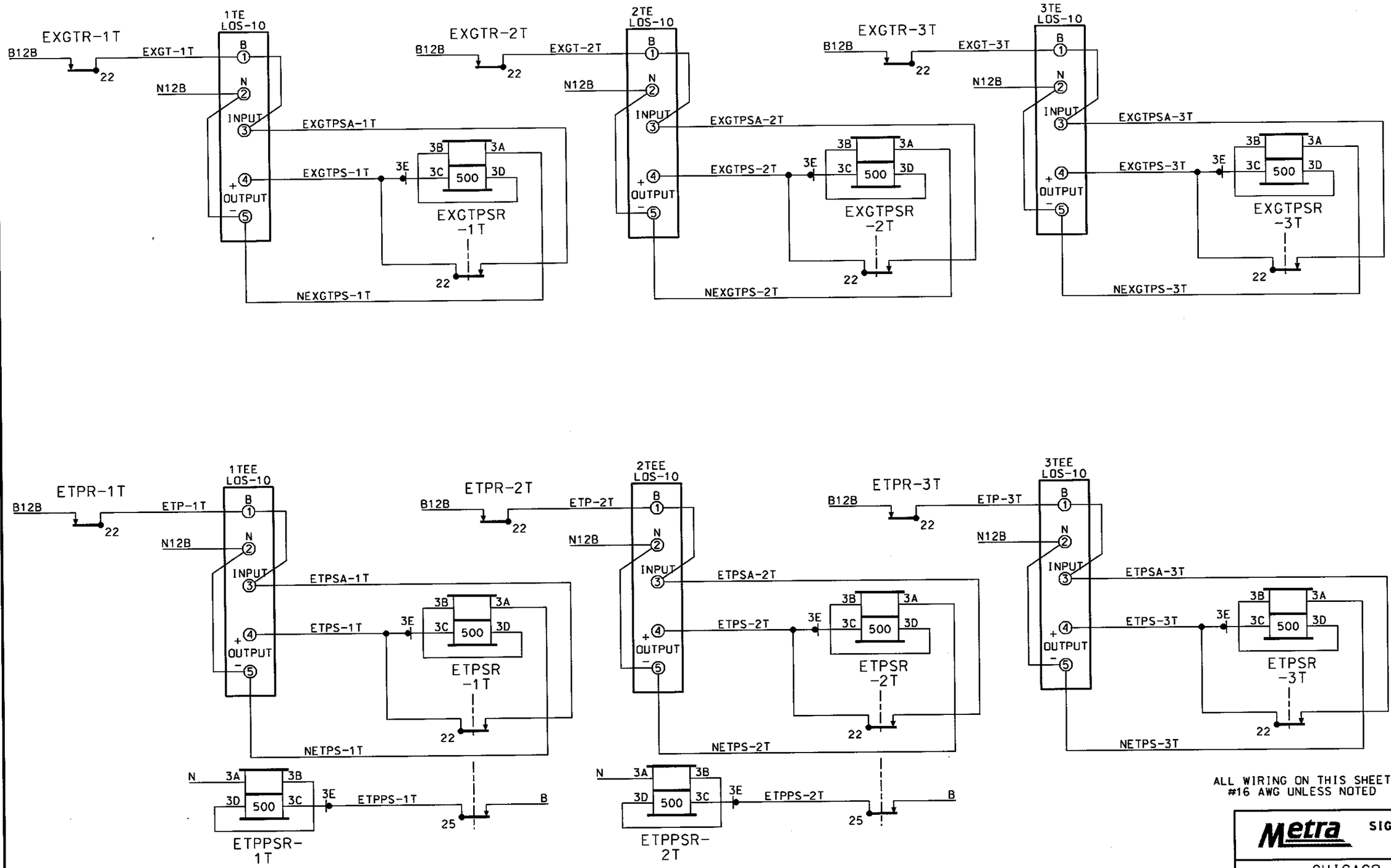

ALL WIRING ON THIS SHEET
#16 AWG UNLESS NOTED

~REVISIONS~

THIS SHEET
ALL NEW

RECORD
05/12/04

Metra SIGNAL ENGINEERING
CHICAGO, ILLINOIS

CHICAGO TO ELGIN
THATCHER AV. & SIGS 114 & 115
LOS CIRCUITS

REFERENCE:			DATE:
11.40 SH.1 THRU SH.34			01/17/04
DESIGNED	DRAWN	CHECKED	APPROVED
TCS	TCS		
DISTRICT	PRINT NUMBER		
MW/W	11.40 SH.16		

DS0084B PHASE 3 SUBMITTAL 05-12-04

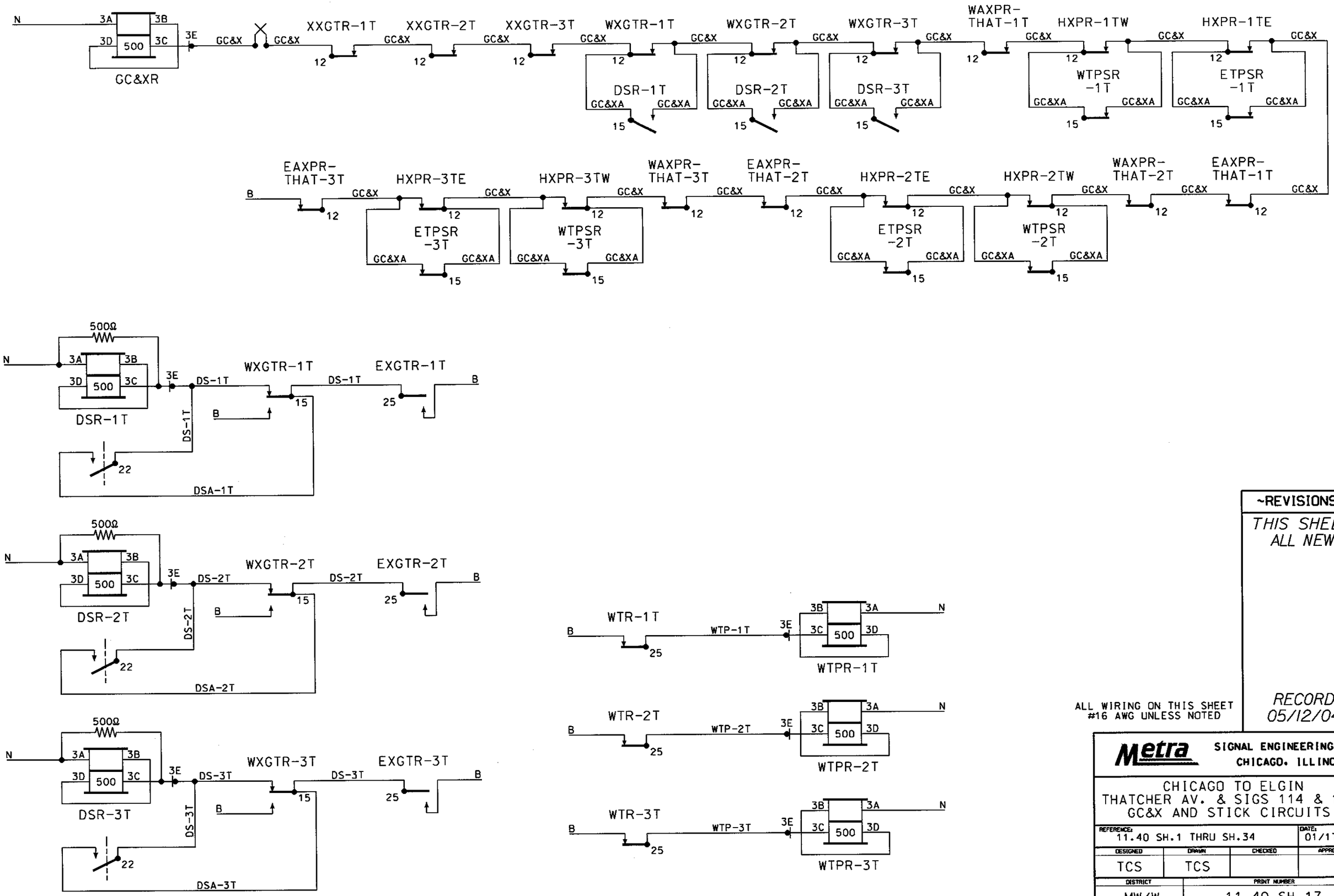

ALL WIRING ON THIS SHEET
#16 AWG UNLESS NOTED

~REVISIONS~

THIS SHEET ALL NEW

RECORD 05/12/04

Metra SIGNAL ENGINEERING CHICAGO, ILLINOIS

CHICAGO TO ELGIN
THATCHER AV. & SIGS 114 & 115
GC&X AND STICK CIRCUITS

REFERENCE: 11.40 SH.1 THRU SH.34			DATE: 01/17/04
DESIGNED	DRAWN	CHECKED	APPROVED
TCS	TCS		
DISTRICT	PRINT NUMBER		
MW/W	11.40 SH.17		

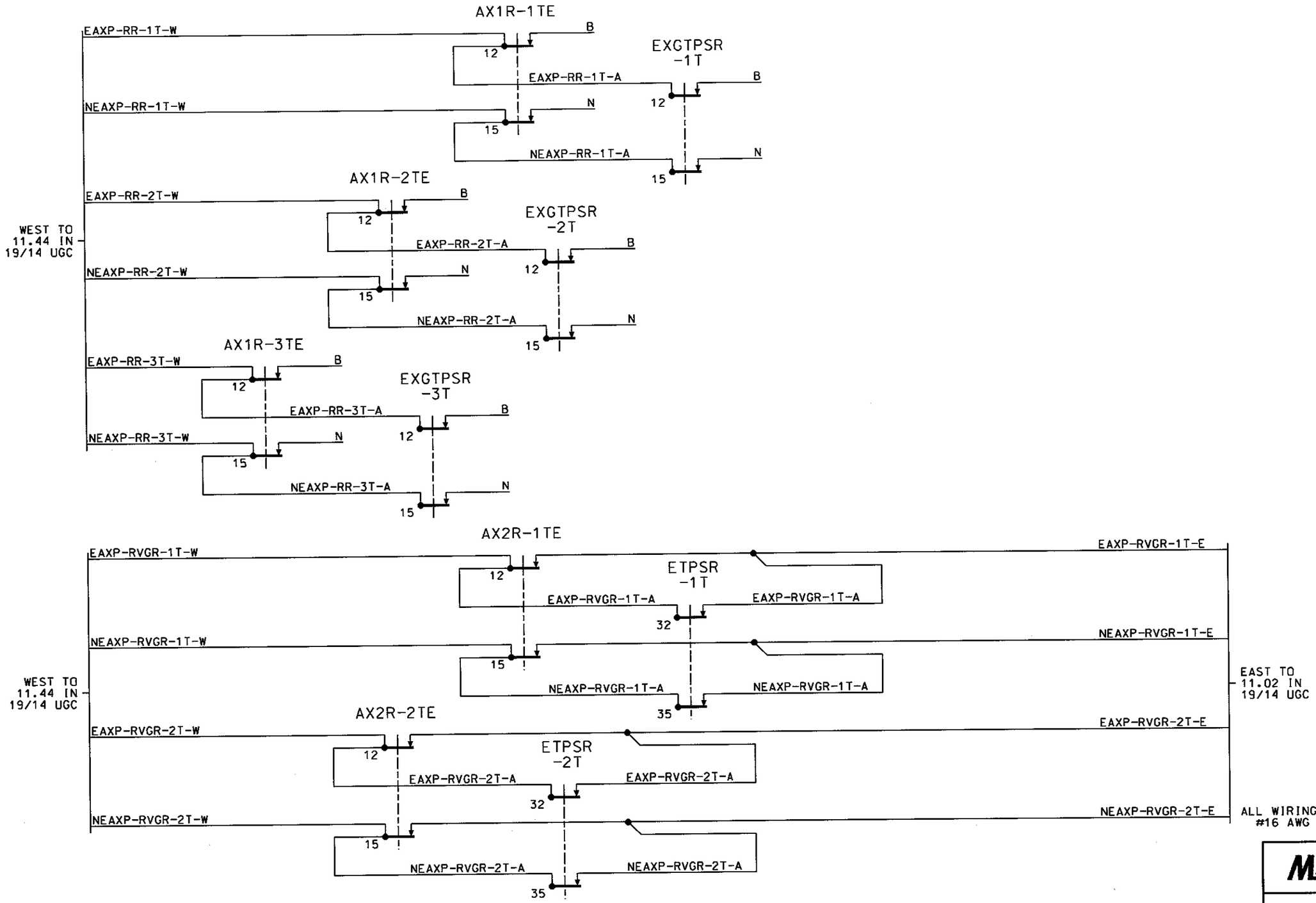

DS0084B PHASE 3 SUBMITTAL 05-12-04

~REVISIONS~

THIS SHEET ALL NEW

RECORD 05/12/04

Metra SIGNAL ENGINEERING CHICAGO, ILLINOIS

CHICAGO TO ELGIN
THATCHER AV. & SIGS 114 & 115
LINE CIRCUITS

REFERENCE:			DATE:
11.40 SH.1 THRU SH.34			01/17/04
DESIGNED	DRAWN	CHECKED	APPROVED
TCS	TCS		
DISTRICT	PRINT NUMBER		
MW/W	11.40 SH.18		

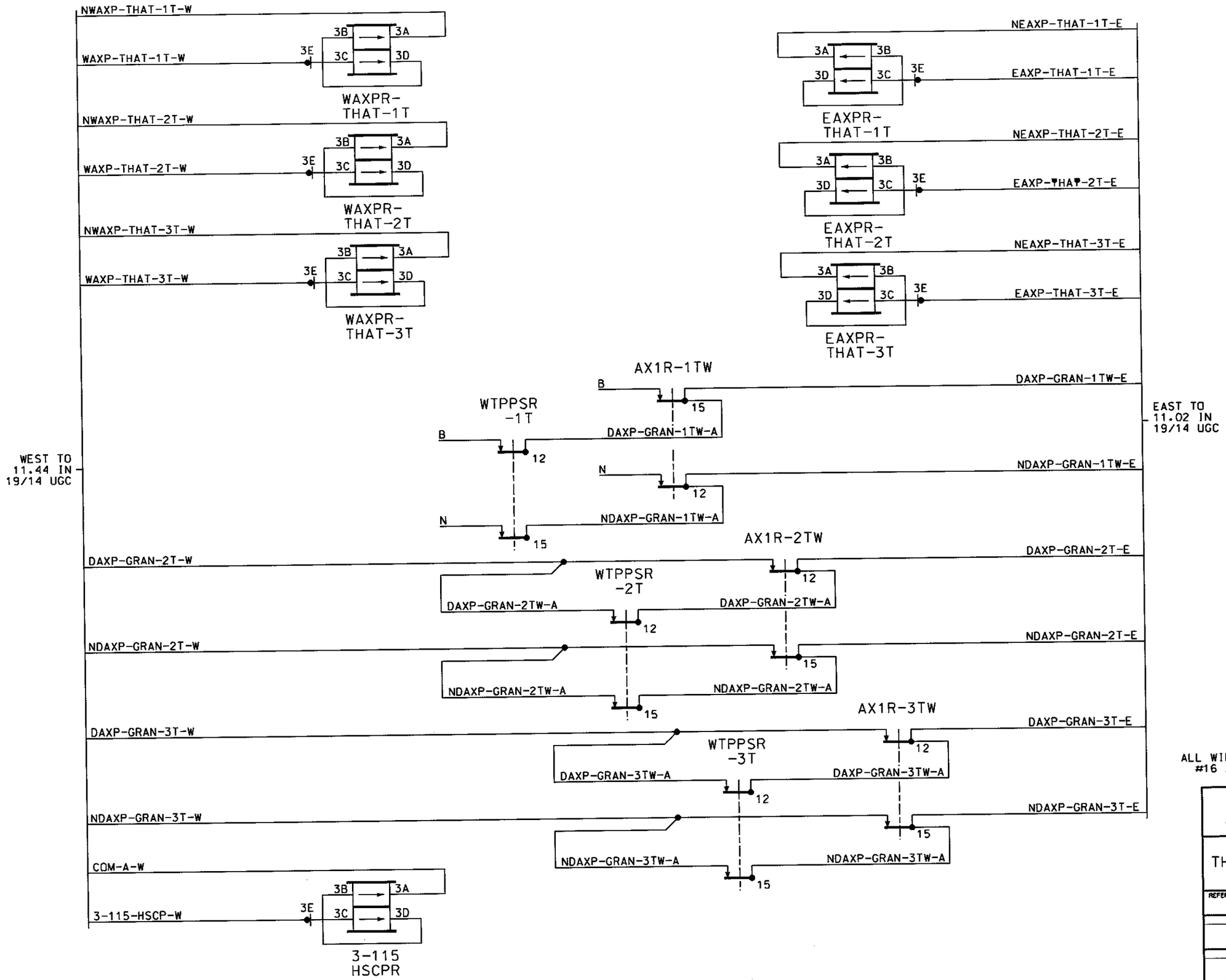

DS0084B PHASE 3 SUBMITTAL 05-12-04

~REVISIONS~

THIS SHEET ALL NEW

RECORD 05/12/04

ALL WIRING ON THIS SHEET #16 AWG UNLESS NOTED

Metra SIGNAL ENGINEERING CHICAGO, ILLINOIS

CHICAGO TO ELGIN
THATCHER AV. & SIGS 114 & 115
LINE CIRCUITS

REFERENCE:			DATE:
11.40 SH.1 THRU SH.34			01/17/04
DESIGNED	DRAWN	CHECKED	APPROVED
TCS	TCS		
DISTRICT	PRINT NUMBER		
MW/W	11.40 SH.19		

DS0084B PHASE 3 SUBMITTAL 05-12-04

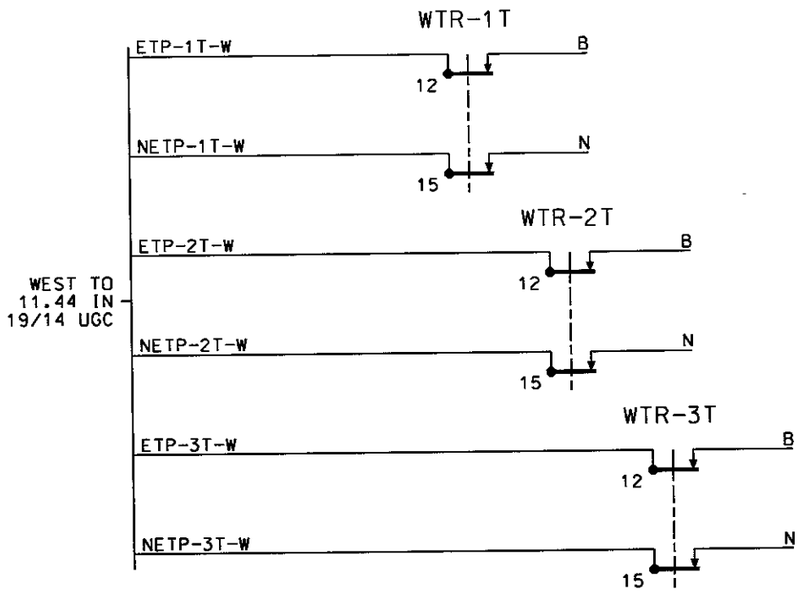

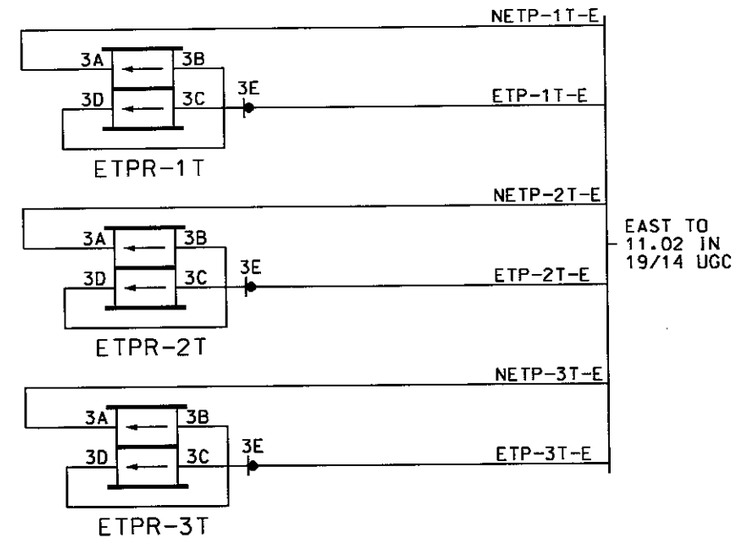

~REVISIONS~

THIS SHEET
ALL NEW

RECORD
05/12/04

ALL WIRING ON THIS SHEET
#16 AWG UNLESS NOTED

Metra SIGNAL ENGINEERING
CHICAGO, ILLINOIS

CHICAGO TO ELGIN
THATCHER AV. & SIGS 114 & 115
LINE CIRCUITS

REFERENCE:			DATE:
11.40 SH.1 THRU SH.34			01/17/04
DESIGNED	DRAWN	CHECKED	APPROVED
TCS	TCS		
DISTRICT	PRINT NUMBER		
MW/W	11.40 SH.20		

DS0084B PHASE 3 SUBMITTAL 05-12-04

PROGRAM FLASH RATE: 55 PER MIN
PROGRAM 1GC DELAY: 4 SEC
PROGRAM 2GC DELAY: 4 SEC
PROGRAM BELL-ON GATE RISING: YES
PROGRAM ENABLED INPUTS: 1 THRU 1
PROGRAM ENABLED OUTPUTS: A AND B
PROGRAM LOW BATTERY: DISABLED

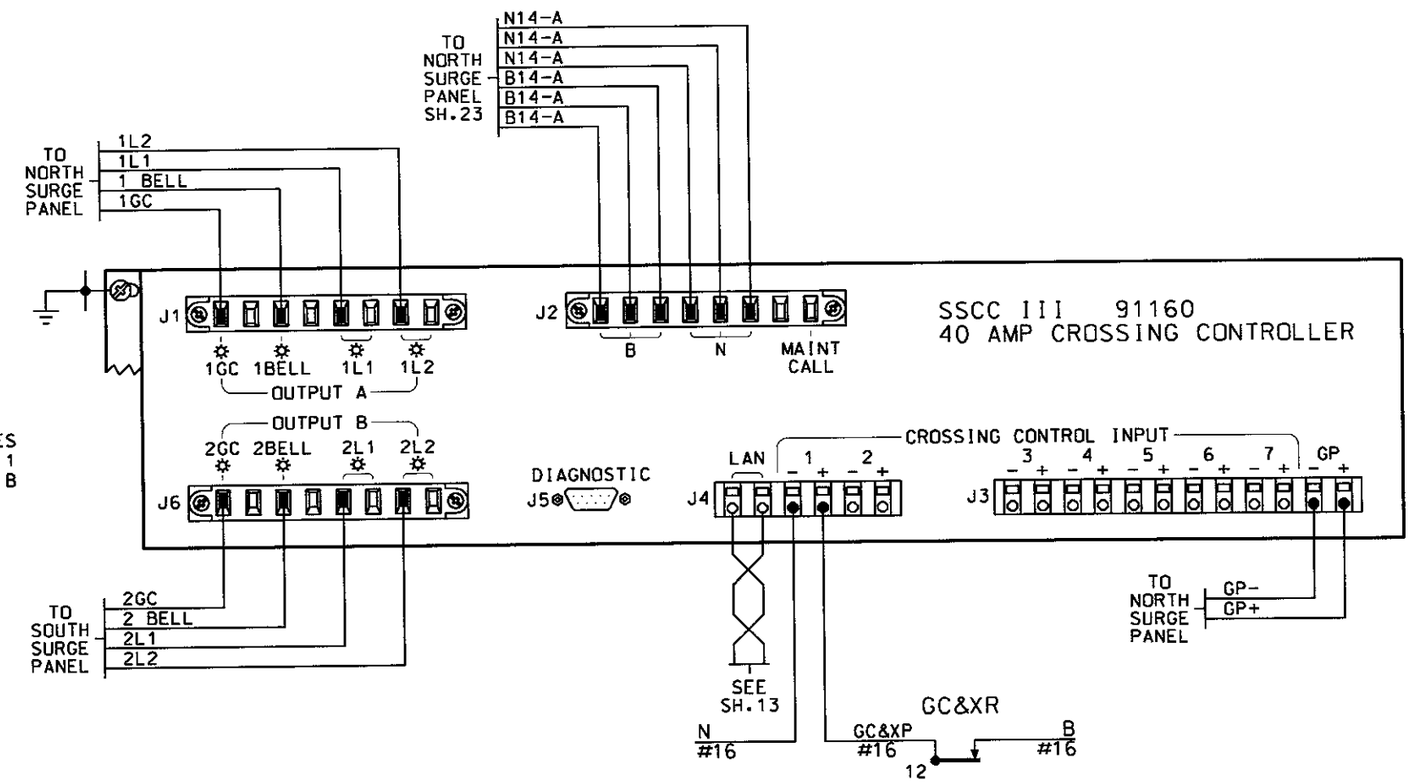

ALL WIRING ON THIS SHEET #10 AWG UNLESS NOTED

~REVISIONS~

THIS SHEET ALL NEW

RECORD 05/12/04

Metra SIGNAL ENGINEERING CHICAGO, ILLINOIS

CHICAGO TO ELGIN
THATCHER AV. & SIGS 114 & 115
CROSSING CONTROLLER

REFERENCE:			DATE:
11.40 SH.1 THRU SH.34			01/17/04
DESIGNED	DRAWN	CHECKED	APPROVED
TCS	TCS		
DISTRICT	PRINT NUMBER		
MW/W	11.40 SH.21		

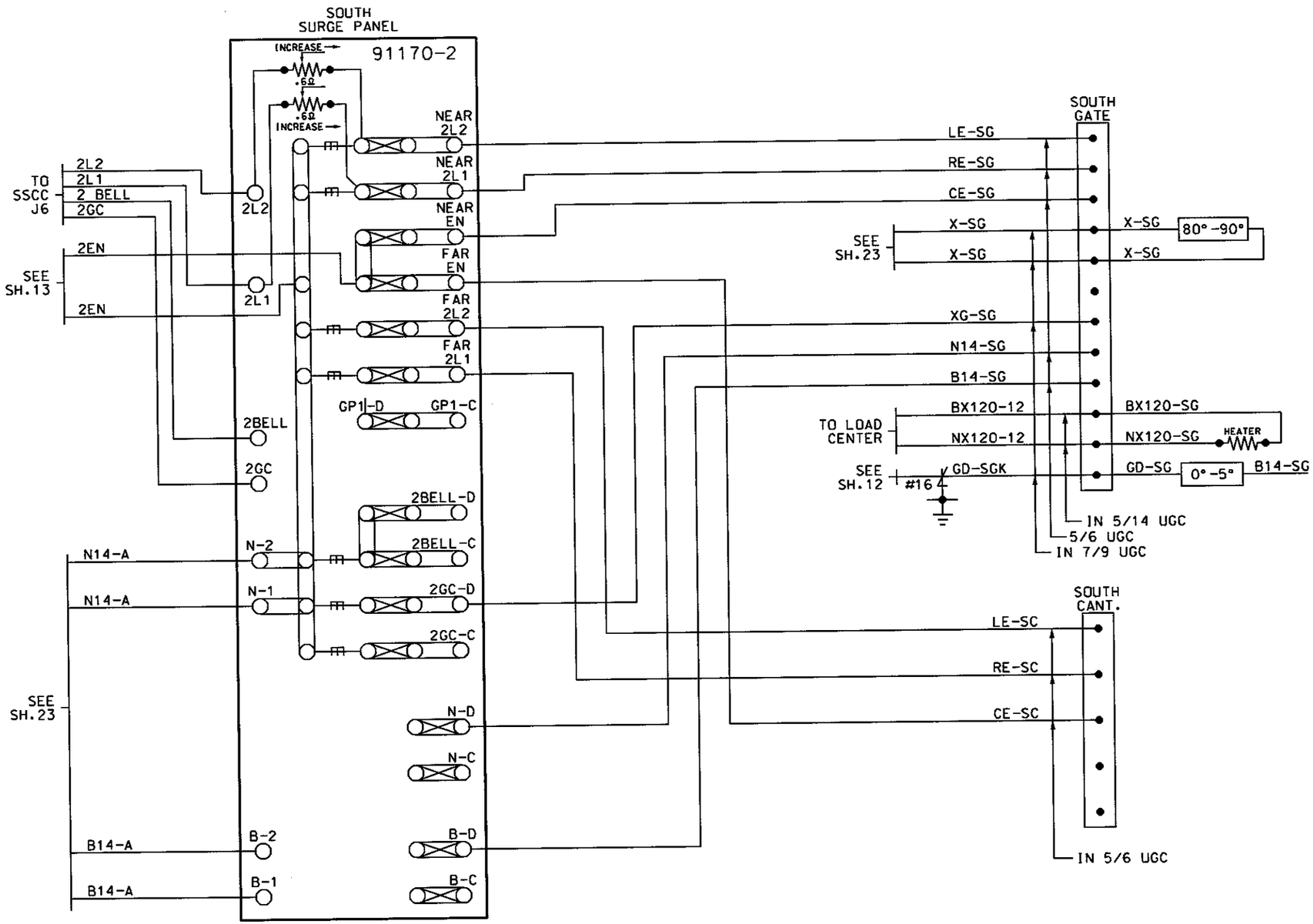

ALL WIRING ON THIS SHEET
#10 AWG UNLESS NOTED

~REVISIONS~

THIS SHEET ALL NEW

RECORD 05/12/04

Metra SIGNAL ENGINEERING CHICAGO, ILLINOIS

CHICAGO TO ELGIN
THATCHER AV. & SIGS 114 & 115
CROSSING CONTROLLER

REFERENCE:			DATE:
11.40 SH.1 THRU SH.34			01/17/04
DESIGNED	DRAWN	CHECKED	APPROVED
TCS	TCS		
DISTRICT	PRINT NUMBER		
MW/W	11.40 SH.22		

DS0084B PHASE 3 SUBMITTAL 05-12-04

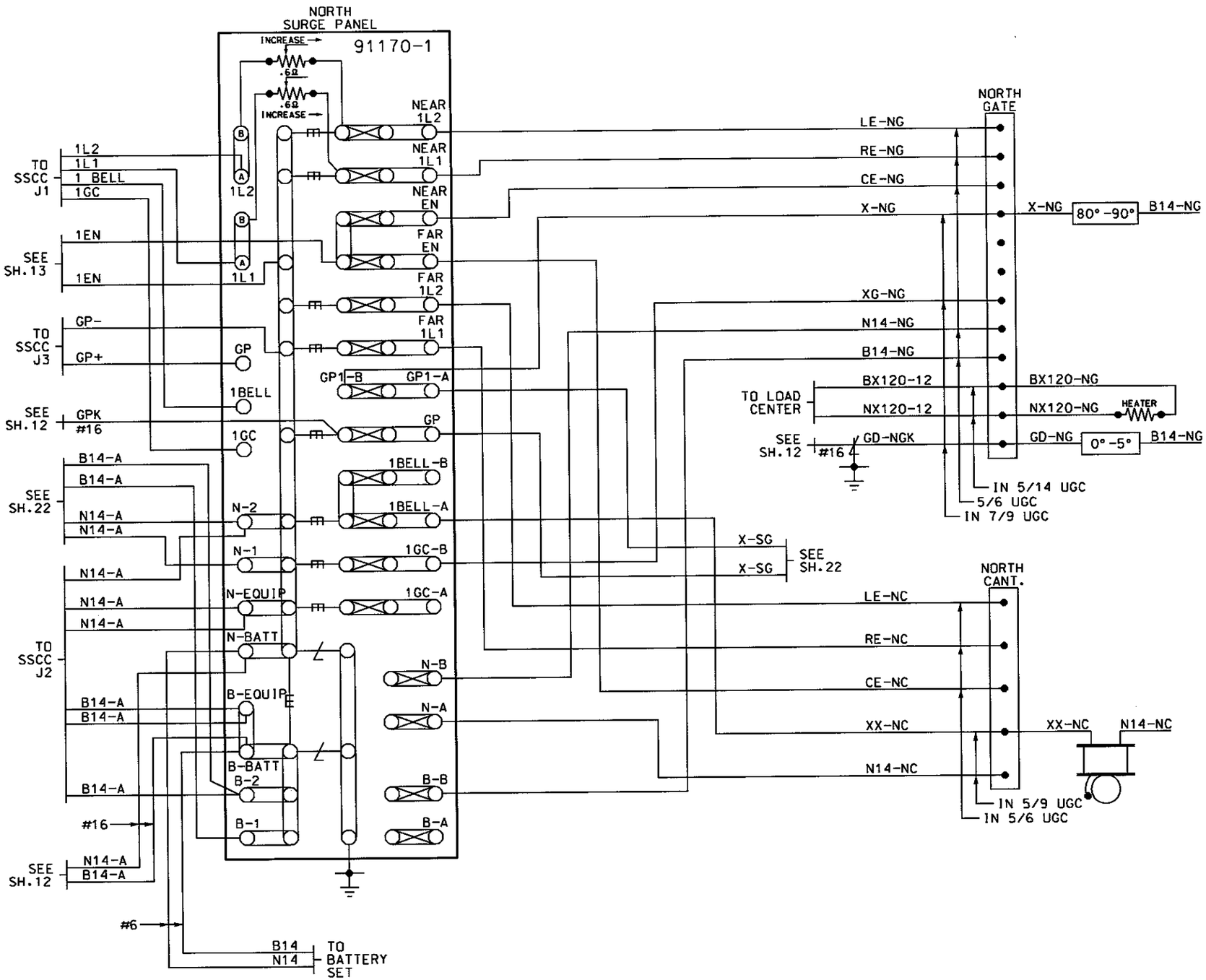

ALL WIRING ON THIS SHEET
#10 AWG UNLESS NOTED

~REVISIONS~

THIS SHEET ALL NEW

RECORD 05/12/04

Metra SIGNAL ENGINEERING CHICAGO, ILLINOIS

CHICAGO TO ELGIN
THATCHER AV. & SIGS 114 & 115
CROSSING CONTROLLER

REFERENCE: 11.40 SH.1 THRU SH.34			DATE: 01/17/04
DESIGNED	DRAWN	CHECKED	APPROVED
TCS	TCS		
DISTRICT	PRINT NUMBER		
MW/W	11.40 SH.23		

DS0084B PHASE 3 SUBMITTAL 05-12-04

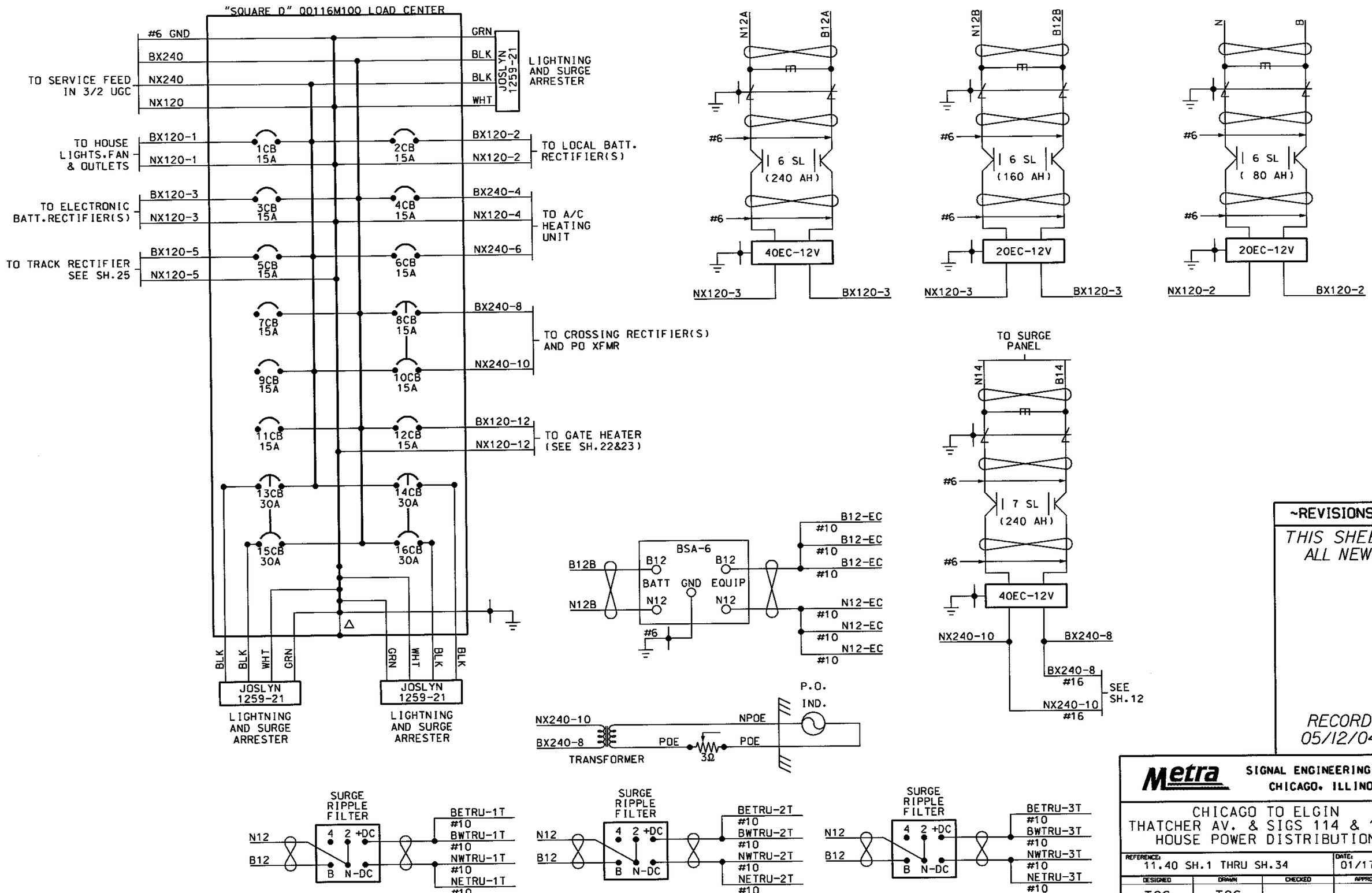

~REVISIONS~

THIS SHEET ALL NEW

RECORD 05/12/04

Metra SIGNAL ENGINEERING CHICAGO, ILLINOIS

CHICAGO TO ELGIN
THATCHER AV. & SIGS 114 & 115
HOUSE POWER DISTRIBUTION

REFERENCE: 11.40 SH.1 THRU SH.34			DATE: 01/17/04
DESIGNED	DRAWN	CHECKED	APPROVED
TCS	TCS		
DISTRICT	PRINT NUMBER		
MW/W	11.40 SH.24		

DS0084B PHASE 3 SUBMITTAL 05-12-04

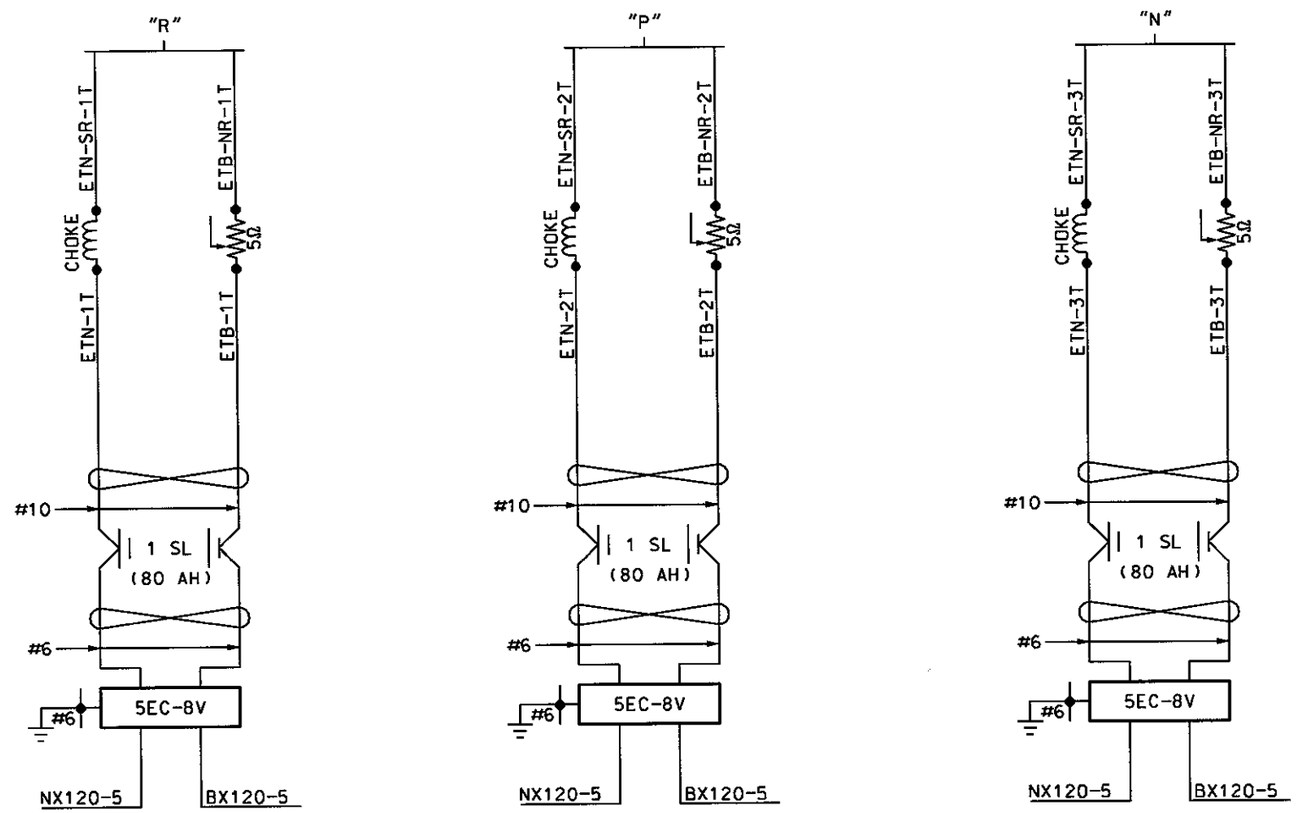

ALL WIRING ON THIS SHEET
#10 AWG UNLESS NOTED

~REVISIONS~

THIS SHEET ALL NEW

RECORD 05/12/04

Metra SIGNAL ENGINEERING CHICAGO, ILLINOIS

CHICAGO TO ELGIN
THATCHER AV. & SIGS 114 & 115
POWER DISTRIBUTION

REFERENCE:			DATE:
11.40 SH.1 THRU SH.34			01/17/04
DESIGNED	DRAWN	CHECKED	APPROVED
TCS	TCS		
DISTRICT	PRINT NUMBER		
MW/W	11.40 SH.25		

DS0084B PHASE 3 SUBMITTAL 05-12-04

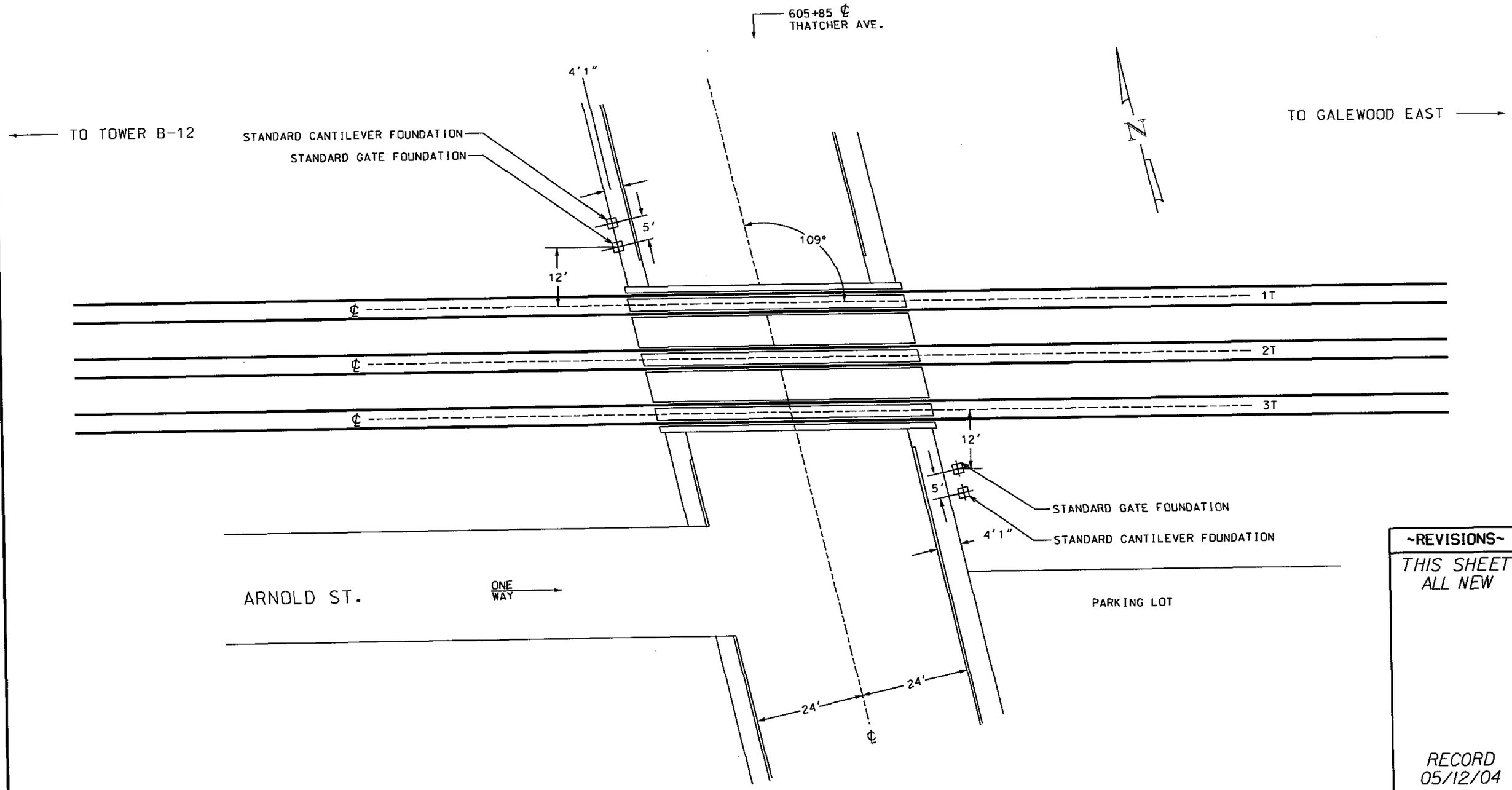

ENLARGED VIEW OF CROSSING
SHOWING LOCATION OF SIGNAL FOUNDATIONS
~ NOT TO SCALE ~

RELAY HOUSE TO BE LOCATED A MINIMUM OF 30 FEET FROM THE EDGE OF THE NEAREST TRAFFIC LANE AND AN ADEQUATE DISTANCE FROM TRACK IN ORDER TO REDUCE OBSTRUCTION TO MOTORIST'S SIGHT DISTANCE.

~REVISIONS~

THIS SHEET ALL NEW

RECORD 05/12/04

Metra SIGNAL ENGINEERING CHICAGO, ILLINOIS

CHICAGO TO ELGIN
THATCHER AV. & SIGS 114 & 115
ENLARGED VIEW

REFERENCE:			DATE:
11.40 SH.1 THRU SH.34			01/17/04
DESIGNED	DRAWN	CHECKED	APPROVED
TCS	TCS		
DISTRICT	PRINT NUMBER		
MW/W	11.40 SH.26		

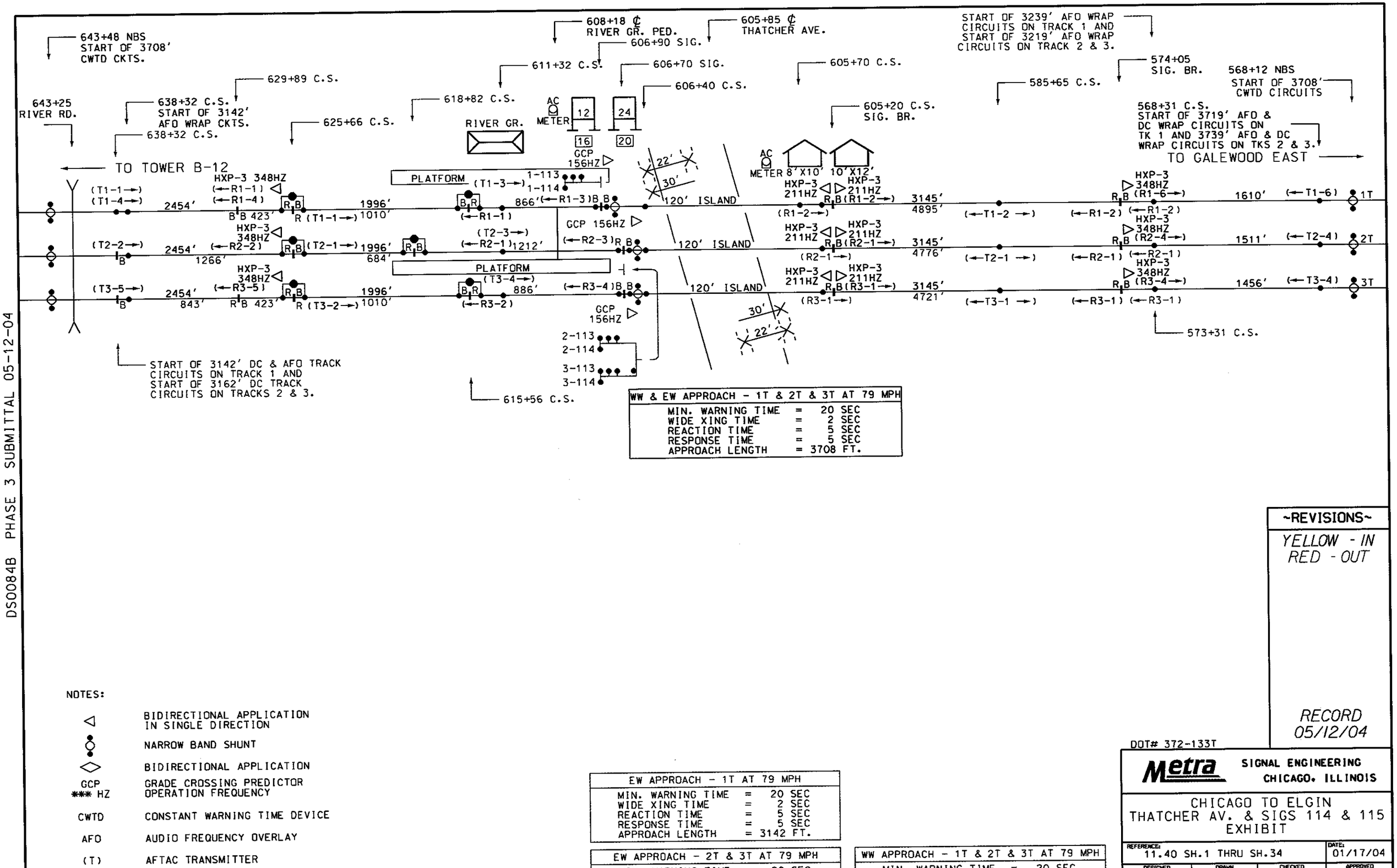

WW & EW APPROACH - 1T & 2T & 3T AT 79 MPH		
MIN. WARNING TIME	=	20 SEC
WIDE XING TIME	=	2 SEC
REACTION TIME	=	5 SEC
RESPONSE TIME	=	5 SEC
APPROACH LENGTH	=	3708 FT.

EW APPROACH - 1T AT 79 MPH		
MIN. WARNING TIME	=	20 SEC
WIDE XING TIME	=	2 SEC
REACTION TIME	=	5 SEC
RESPONSE TIME	=	5 SEC
APPROACH LENGTH	=	3142 FT.

EW APPROACH - 2T & 3T AT 79 MPH		
MIN. WARNING TIME	=	20 SEC
WIDE XING TIME	=	2 SEC
REACTION TIME	=	0 SEC
RESPONSE TIME	=	5 SEC
APPROACH LENGTH	=	3162 FT.

WW APPROACH - 1T & 2T & 3T AT 79 MPH		
MIN. WARNING TIME	=	20 SEC
WIDE XING TIME	=	2 SEC
REACTION TIME	=	5 SEC
RESPONSE TIME	=	5 SEC
APPROACH LENGTH	=	3708 FT.

NOTES:

- ◁ BIDIRECTIONAL APPLICATION IN SINGLE DIRECTION
- NARROW BAND SHUNT
- ◇ BIDIRECTIONAL APPLICATION
- GCP *** HZ — GRADE CROSSING PREDICTOR OPERATION FREQUENCY
- CWTD — CONSTANT WARNING TIME DEVICE
- AFO — AUDIO FREQUENCY OVERLAY
- (T) — AFTAC TRANSMITTER
- (R) — AFTAC RECEIVER
- WIDE BAND SHUNT/COUPLER

~REVISIONS~

YELLOW - IN
RED - OUT

RECORD
05/12/04

DOT# 372-133T

Metra SIGNAL ENGINEERING CHICAGO, ILLINOIS

CHICAGO TO ELGIN
THATCHER AV. & SIGS 114 & 115
EXHIBIT

REFERENCE: 11.40 SH.1 THRU SH.34			DATE: 01/17/04
DESIGNED	DRAWN	CHECKED	APPROVED
TCS	TCS		
DISTRICT	PRINT NUMBER		
MW/W	11.40 SH.27		

DS0084B PHASE 3 SUBMITTAL 05-12-04

DS0084B PHASE 3 SUBMITTAL 05-12-04

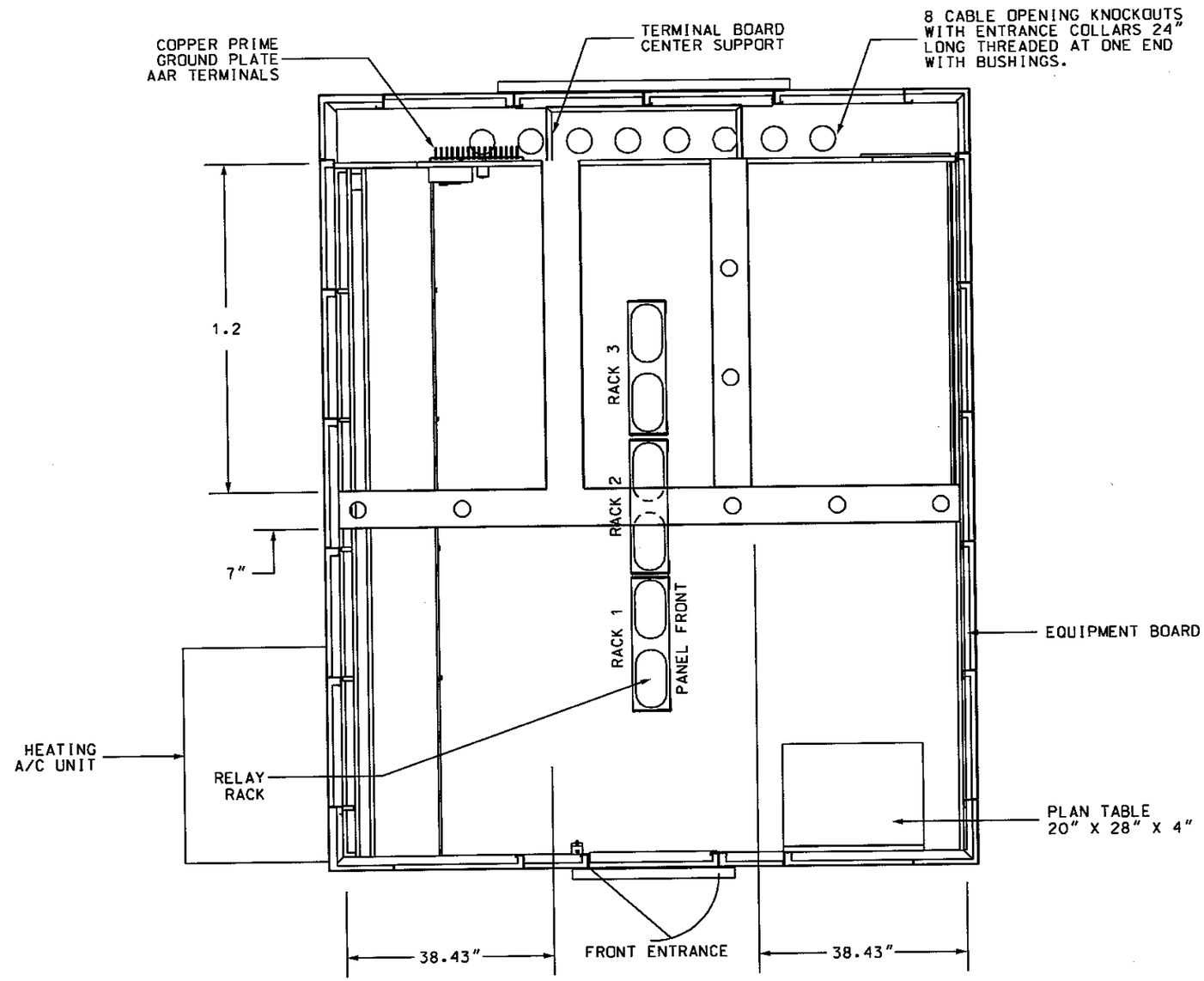

NOTES:
1. FRONT ENTRANCE FACES WEST.
2. NOT TO SCALE

~REVISIONS~

THIS SHEET ALL NEW

RECORD 05/12/04

Metra SIGNAL ENGINEERING CHICAGO, ILLINOIS

CHICAGO TO ELGIN
THATCHER AV. & SIGS 114 & 115
HOUSE PLAN

REFERENCE: 11.40 SH.1 THRU SH.34			DATE: 01/17/04
DESIGNED	DRAWN	CHECKED	APPROVED
TCS	TCS		
DISTRICT	PRINT NUMBER		
MW/W	11.40 SH.28		

DS0084B PHASE 3 SUBMITTAL 05-12-04

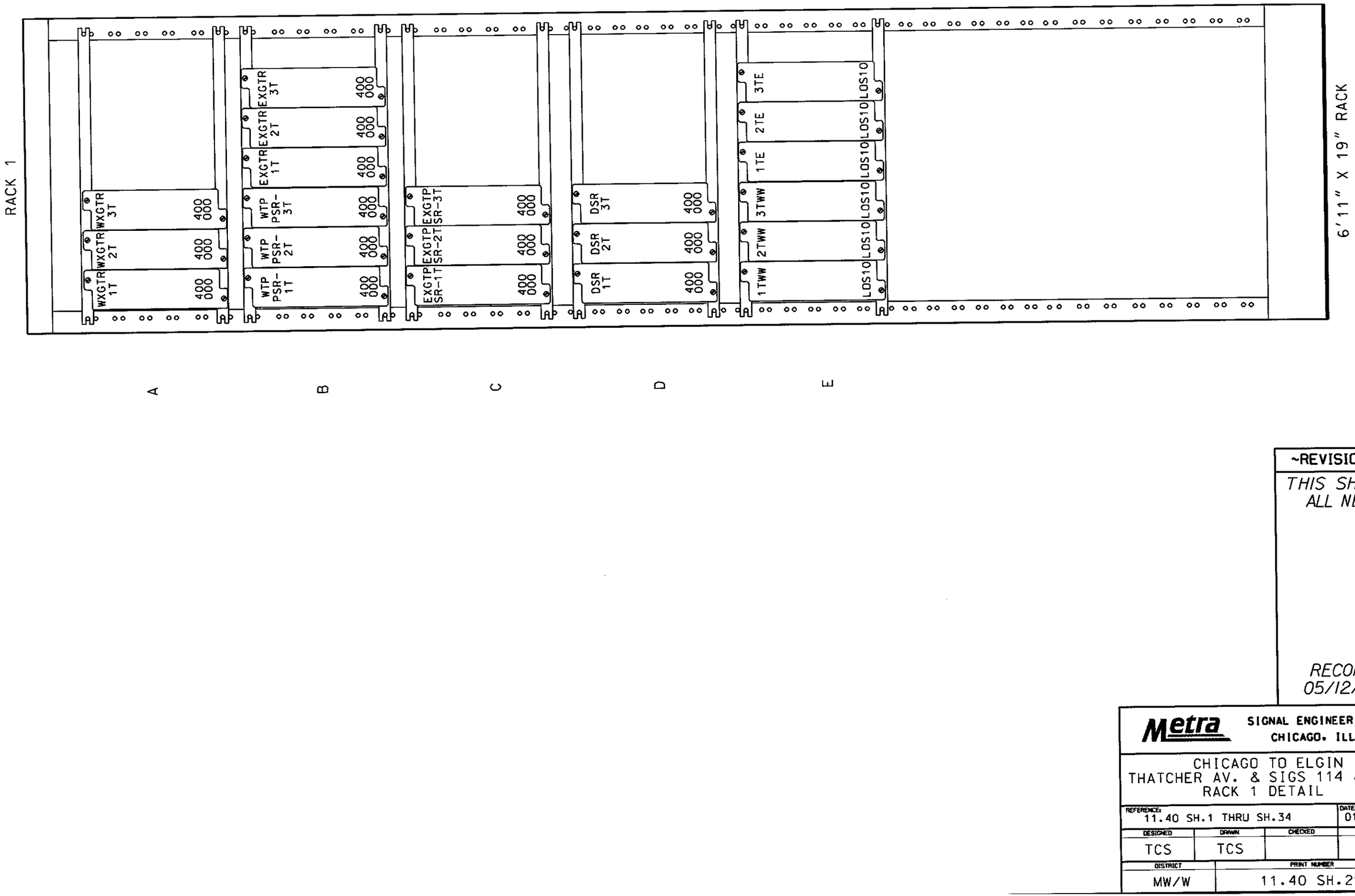

~REVISIONS~

THIS SHEET ALL NEW

RECORD 05/12/04

Metra SIGNAL ENGINEERING CHICAGO, ILLINOIS

CHICAGO TO ELGIN
THATCHER AV. & SIGS 114 & 115
RACK 1 DETAIL

REFERENCE:			DATE:
11.40 SH.1 THRU SH.34			01/17/04
DESIGNED	DRAWN	CHECKED	APPROVED
TCS	TCS		
DISTRICT	PRINT NUMBER		
MW/W	11.40 SH.29		

DS0084B PHASE 3 SUBMITTAL 05-12-04

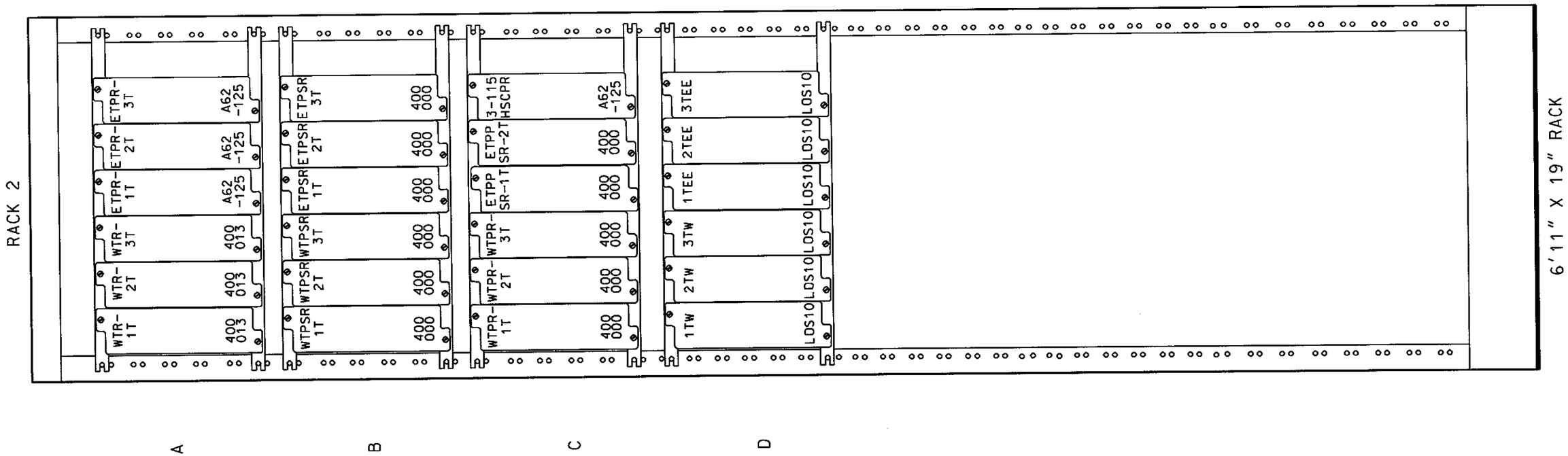

~REVISIONS~

THIS SHEET ALL NEW

RECORD 05/12/04

Metra SIGNAL ENGINEERING CHICAGO, ILLINOIS

CHICAGO TO ELGIN
THATCHER AV. & SIGS 114 & 115
RACK 2 DETAIL

REFERENCE:			DATE:
11.40 SH.1 THRU SH.34			01/17/04
DESIGNED	DRAWN	CHECKED	APPROVED
TCS	TCS		
DISTRICT	PRINT NUMBER		
MW/W	11.40 SH.30		

DS0084B PHASE 3 SUBMITTAL 05-12-04

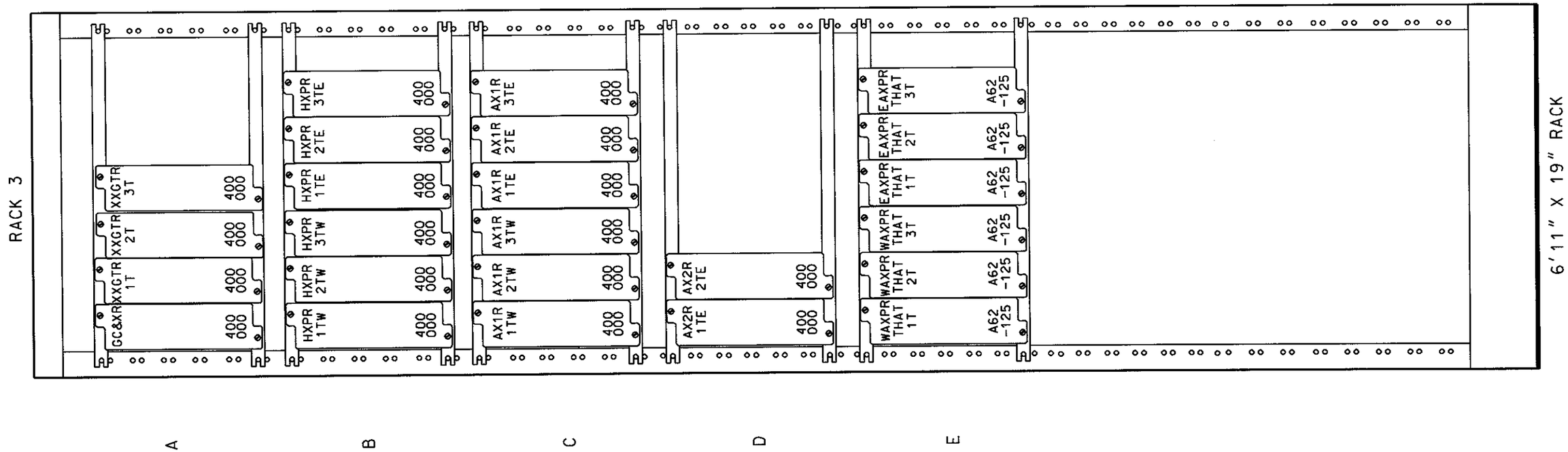

~REVISIONS~

THIS SHEET ALL NEW

RECORD 05/12/04

Metra SIGNAL ENGINEERING CHICAGO, ILLINOIS

CHICAGO TO ELGIN
THATCHER AV. & SIGS 114 & 115
RACK 3 DETAIL

REFERENCE:			DATE:
11.40 SH.1 THRU SH.34			01/17/04
DESIGNED	DRAWN	CHECKED	APPROVED
TCS	TCS		
DISTRICT	PRINT NUMBER		
MW/W	11.40 SH.31		

DS0084B PHASE 3 SUBMITTAL 05-12-04

RACK 1
(REAR VIEW)

	7	6	5	4	3	2	1
A					WXGTR-3T 3A 3C 3E 400000	WXGTR-2T 3A 3C 3E 400000	WXGTR-1T 3A 3C 3E 400000
B		EXGTR-3T 3A 3C 3E 400000	EXGTR-2T 3A 3C 3E 400000	EXGTR-1T 3A 3C 3E 400000	WTPPSR -3T 3A 3C 3E 400000	WTPPSR -2T 3A 3C 3E 400000	WTPPSR -1T 3A 3C 3E 400000
C					EXGTPSR-3T 3A 3C 3E 400000	EXGTPSR-2T 3A 3C 3E 400000	EXGTPSR-1T 3A 3C 3E 400000
D					DSR-3T 3A 3C 3E 400000	DSR-2T 3A 3C 3E 400000	DSR-1T 3A 3C 3E 400000
E		3TE LOS10	2TE LOS10	1TE LOS10			

~REVISIONS~

THIS SHEET ALL NEW

RECORD 05/12/04

Metra SIGNAL ENGINEERING CHICAGO, ILLINOIS

CHICAGO TO ELGIN
THATCHER AV. & SIGS 114 & 115
RACK 1 RELAY CONSIST

REFERENCE:			DATE:
11.40 SH.1 THRU SH.34			01/17/04
DESIGNED	DRAWN	CHECKED	APPROVED
TCS	TCS		
DISTRICT	PRINT NUMBER		
MW/W	11.40 SH.32		

DS0084B PHASE 3 SUBMITTAL 05-12-04

RACK 2
(REAR VIEW)

	7	6	5	4	3	2	1
A		ETPR-3T 3A 3C 3E A62-125	ETPR-2T 3A 3C 3E A62-125	ETPR-1T 3A 3C 3E A62-125	WTR-3T 3A 3C 3E 400013	WTR-2T 3A 3C 3E 400013	WTR-1T 3A 3C 3E 400013
B		ETPSR-3T 3A 3C 3E 400000	ETPSR-2T 3A 3C 3E 400000	ETPSR-1T 3A 3C 3E 400000	WTPSR-3T 3A 3C 3E 400000	WTPSR-2T 3A 3C 3E 400000	WTPSR-1T 3A 3C 3E 400000
C		3-115 HSCPR 3A 3C 3E A62-125	ETPPSR- 2T 3A 3C 3E 400000	ETPPSR- 1T 3A 3C 3E 400000	WTPR-3T 3A 3C 3E 400000	WTPR-2T 3A 3C 3E 400000	WTPR-1T 3A 3C 3E 400000
D		3TEE LOS10	2TEE LOS10	1TEE LOS10	3TW LOS10	2TW LOS10	1TW LOS10

~REVISIONS~

THIS SHEET ALL NEW

RECORD 05/12/04

Metra SIGNAL ENGINEERING CHICAGO, ILLINOIS

CHICAGO TO ELGIN
THATCHER AV. & SIGS 114 & 115
RACK 2 RELAY CONSIST

REFERENCE:			DATE:
11.40 SH.1 THRU SH.34			01/17/04
DESIGNED	DRAWN	CHECKED	APPROVED
TCS	TCS		
DISTRICT	PRINT NUMBER		
MW/W	11.40 SH.33		

DS0084B PHASE 3 SUBMITTAL 05-12-04

RACK 3
(REAR VIEW)

	7	6	5	4	3	2	1
A				XXGTR-3T 3A 3C 3E 400000	XXGTR-2T 3A 3C 3E 400000	XXGTR-1T 3A 3C 3E 400000	GC&XR 3A 3C 3E 400000
B		HXPR-3TE 3A 3C 3E 400000	HXPR-2TE 3A 3C 3E 400000	HXPR-1TE 3A 3C 3E 400000	HXPR-3TW 3A 3C 3E 400000	HXPR-2TW 3A 3C 3E 400000	HXPR-1TW 3A 3C 3E 400000
C		AX1R-3TE 3A 3C 3E 400000	AX1R-2TE 3A 3C 3E 400000	AX1R-1TE 3A 3C 3E 400000	AX1R-3TW 3A 3C 3E 400000	AX1R-2TW 3A 3C 3E 400000	AX1R-1TW 3A 3C 3E 400000
D						AX2R-2TE 3A 3C 3E 400000	AX2R-1TE 3A 3C 3E 400000
E		EAXPR-THAT-3T 3A 3C 3E A62-125	EAXPR-THAT-2T 3A 3C 3E A62-125	EAXPR-THAT-1T 3A 3C 3E A62-125	WAXPR-THAT-3T 3A 3C 3E A62-125	WAXPR-THAT-2T 3A 3C 3E A62-125	WAXPR-THAT-1T 3A 3C 3E A62-125

~REVISIONS~

THIS SHEET ALL NEW

RECORD 05/12/04

Metra SIGNAL ENGINEERING CHICAGO, ILLINOIS

CHICAGO TO ELGIN
THATCHER AV. & SIGS 114 & 115
RACK 3 RELAY CONSIST

REFERENCE:			DATE:
11.40 SH.1 THRU SH.34			01/17/04
DESIGNED	DRAWN	CHECKED	APPROVED
TCS	TCS		
DISTRICT	PRINT NUMBER		
MW/W	11.40 SH.34		

DS0084B PHASE 3 SUBMITTAL 05-12-04

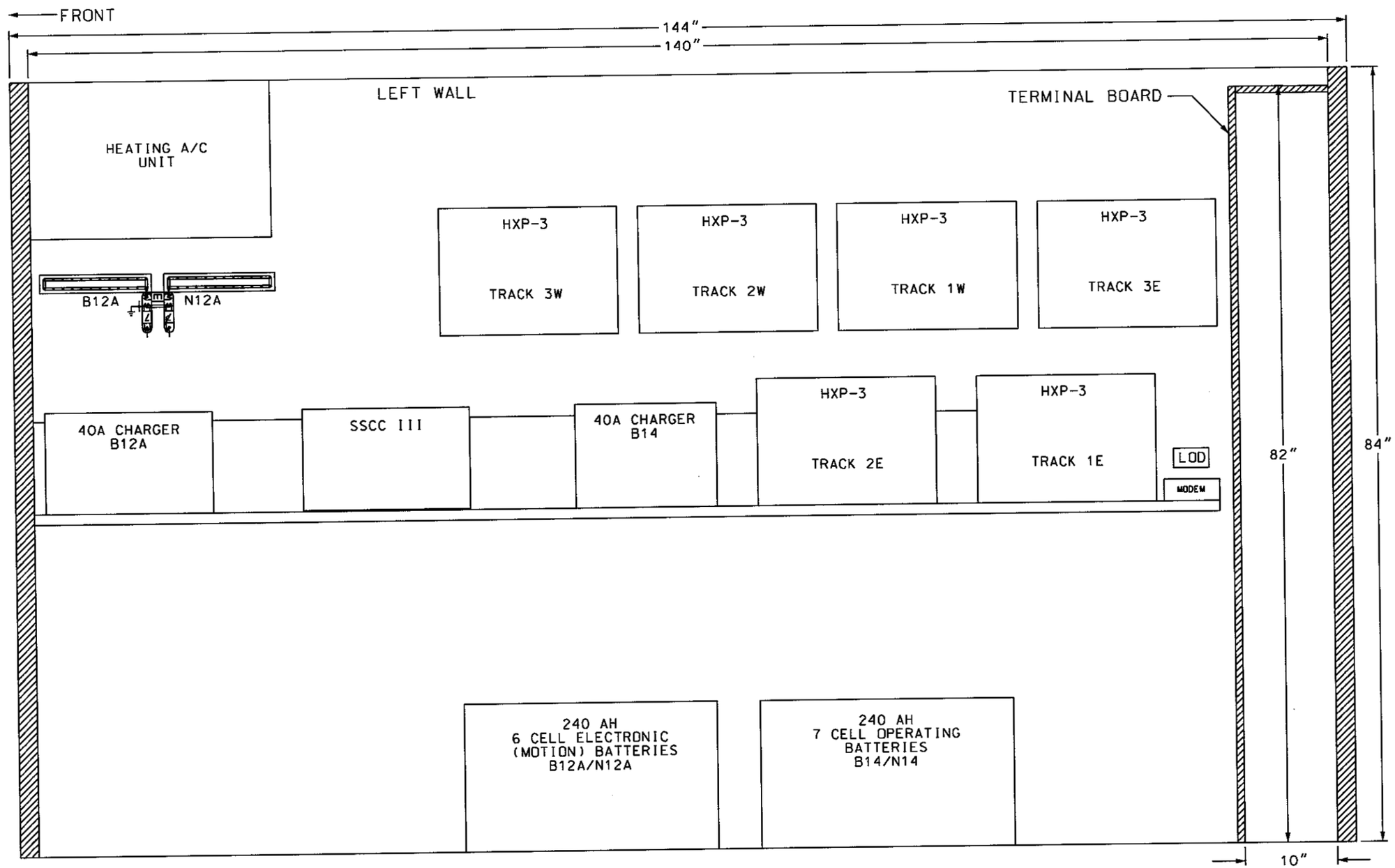

~REVISIONS~

THIS SHEET ALL NEW

RECORD 05/12/04

Metra SIGNAL ENGINEERING CHICAGO, ILLINOIS

CHICAGO TO ELGIN
THATCHER AV & SIGS 114 & 115
WALL LAYOUT

REFERENCE:			DATE:
11.40			01/17/04
DESIGNED	DRAWN	CHECKED	APPROVED
TCS	TCS		
DISTRICT	PRINT NUMBER		
MW/W	11.40 SH.SHOP1		

DOOR FACES WEST

DS0084B PHASE 3 SUBMITTAL 05-12-04

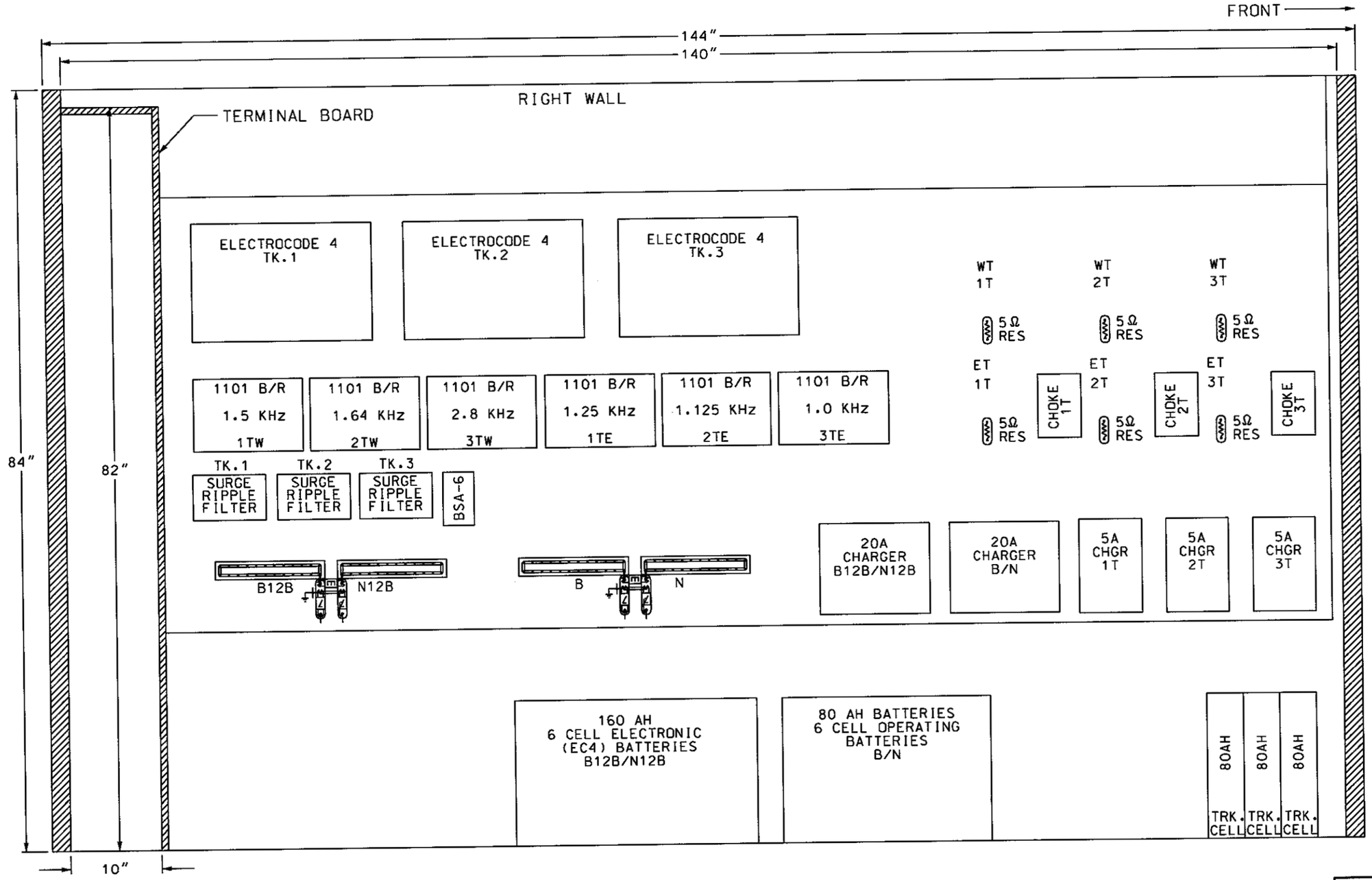

DOOR FACES WEST

~REVISIONS~

THIS SHEET ALL NEW

RECORD 05/12/04

Metra SIGNAL ENGINEERING CHICAGO, ILLINOIS

CHICAGO TO ELGIN
THATCHER AV & SIGS 114 & 115
WALL LAYOUT

REFERENCE: 11.40			DATE: 01/17/04
DESIGNED	DRAWN	CHECKED	APPROVED
TCS	TCS		
DISTRICT	PRINT NUMBER		
MW/W	11.40 SH.SHOP2		

DS0084B PHASE 3 SUBMITTAL 05-12-04

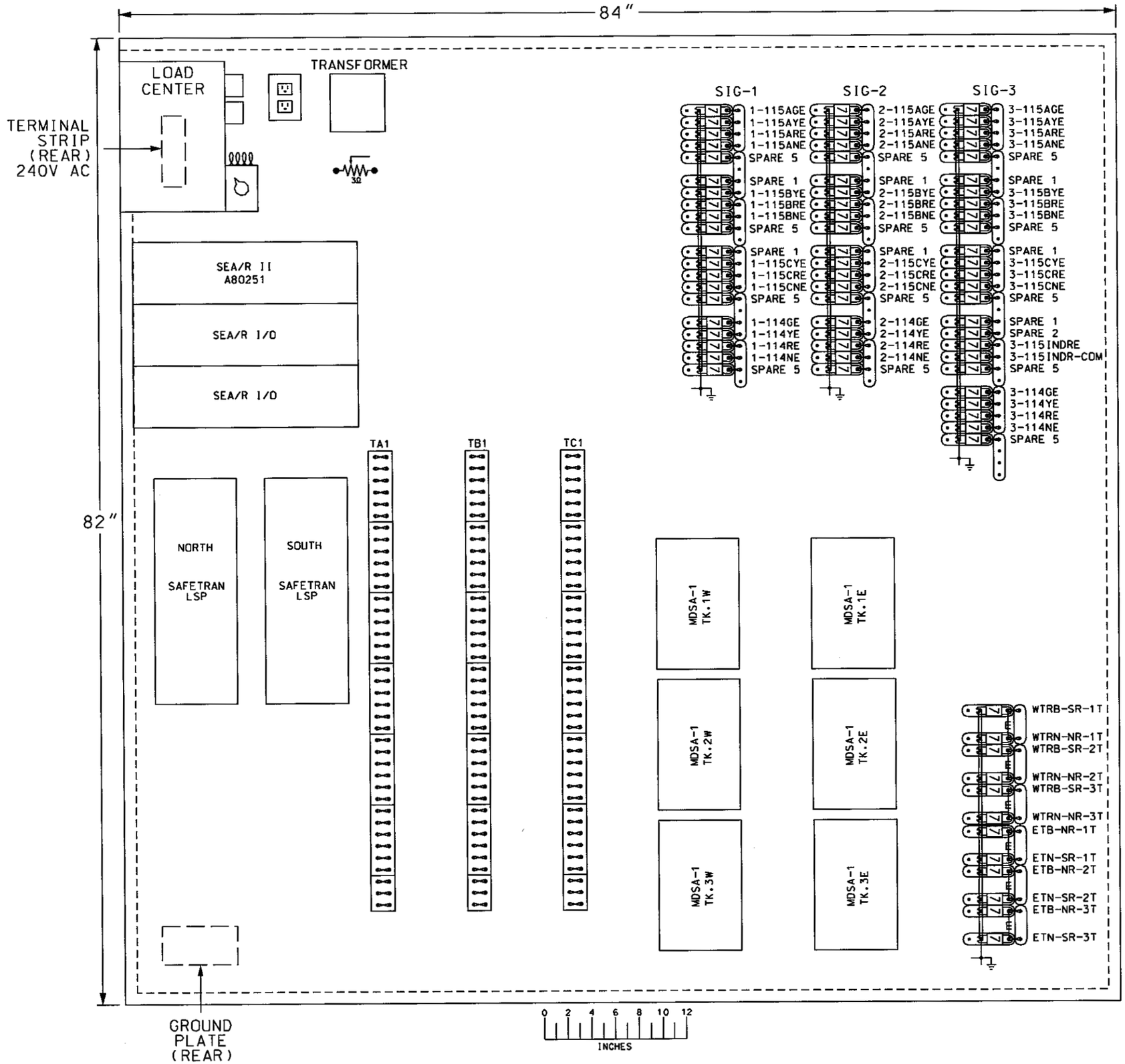

~REVISIONS~

THIS SHEET ALL NEW

RECORD 05/12/04

Metra SIGNAL ENGINEERING CHICAGO, ILLINOIS

CHICAGO TO ELGIN
THATCHER AV & SIGS 108 & 109
TERMINAL BOARD LAYOUT

REFERENCE:			DATE:
11.40			01/17/04
DESIGNED	DRAWN	CHECKED	APPROVED
TCS	TCS		
DISTRICT	PRINT NUMBER		
MW/W	11.40 SH.SHOP3		

DS0084B PHASE 3 SUBMITTAL 05-12-04

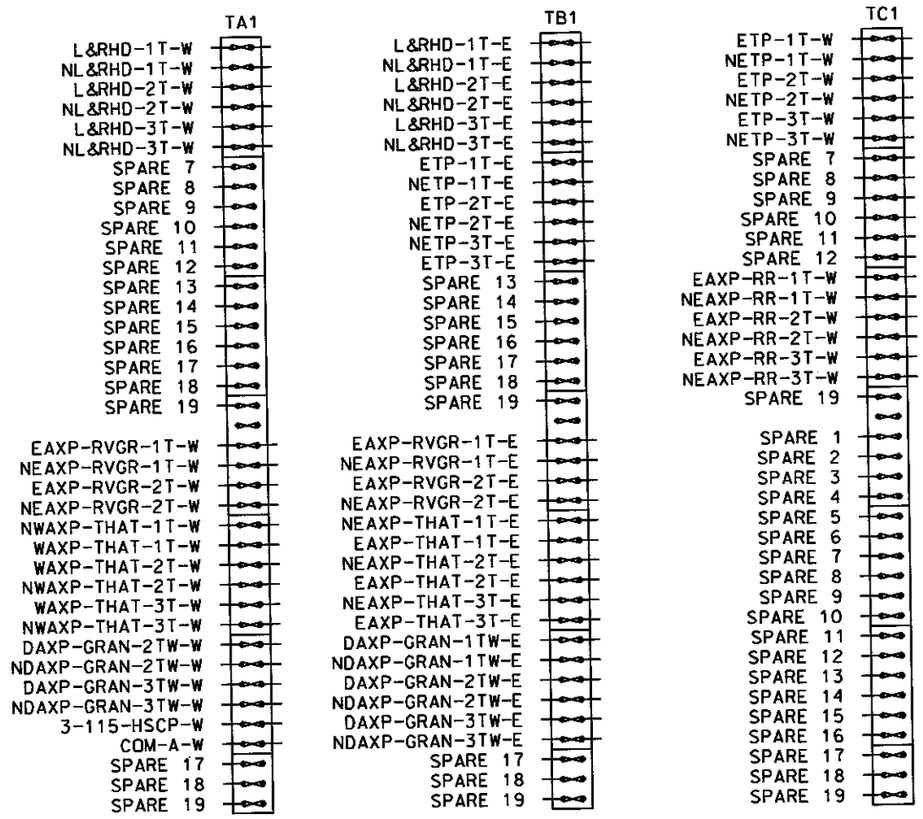

~REVISIONS~

THIS SHEET
ALL NEW

RECORD
05/12/04

10'X12' HOUSE

Metra SIGNAL ENGINEERING
CHICAGO, ILLINOIS

CHICAGO TO ELGIN
SIGNALS 101 & 102
TERMINAL DETAIL

REFERENCE:			DATE:
11.40			01/17/04
DESIGNED	DRAWN	CHECKED	APPROVED
TCS	TCS		
DISTRICT	PRINT NUMBER		
MW/W	11.40 SH.SHOP4		